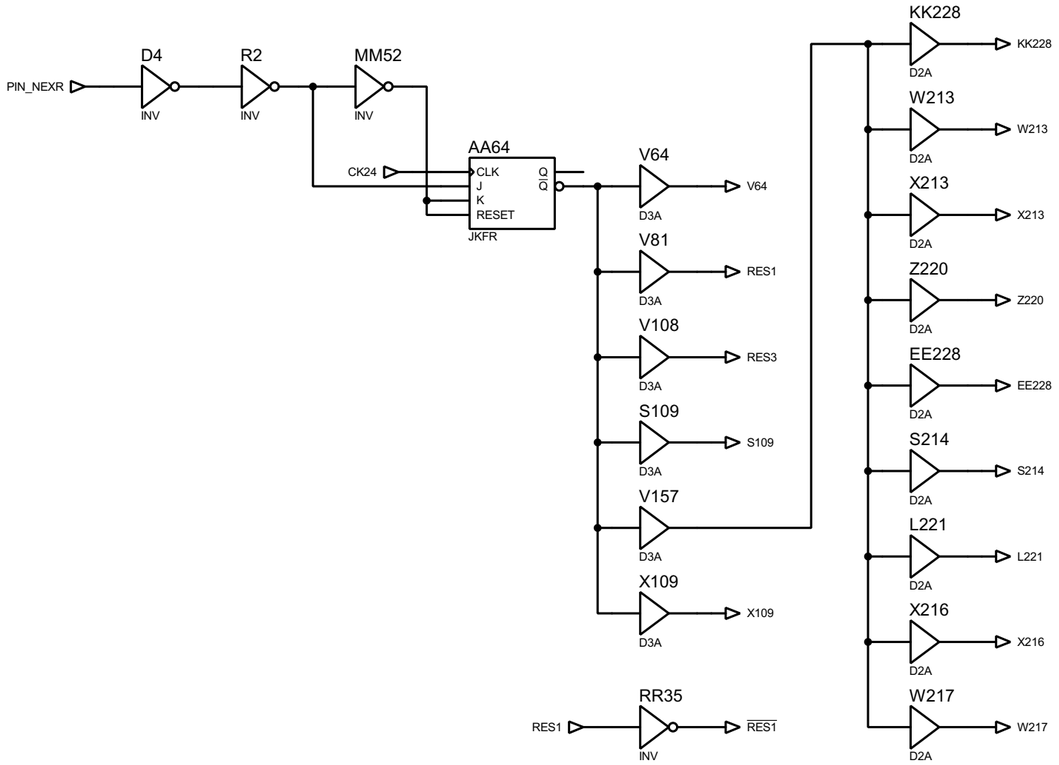

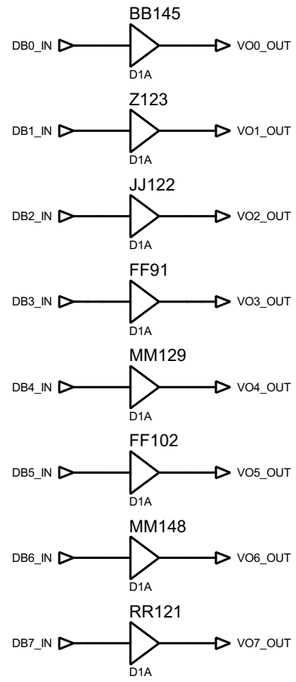

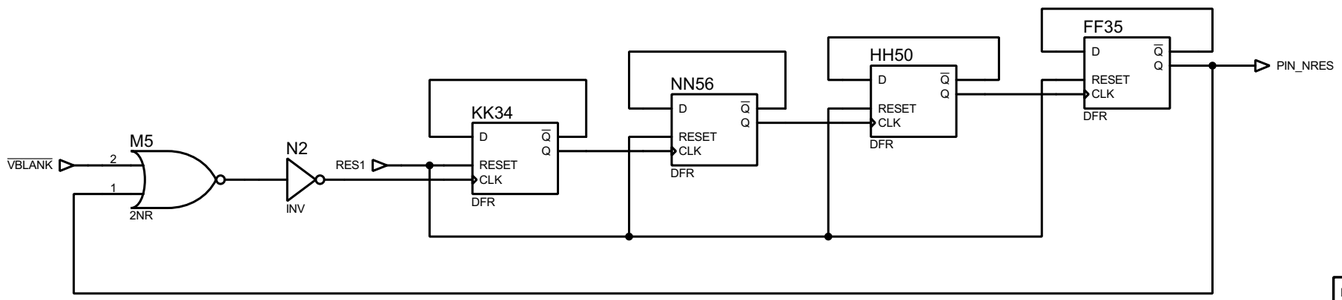

FILE NAME: **007121.pdsprj**		DATE: **31/03/2021**
DESIGN TITLE: **Konami 007121** RESET		PAGE: **1 of 52**
BY: **Sean Gonsalves**	REV: **0**	

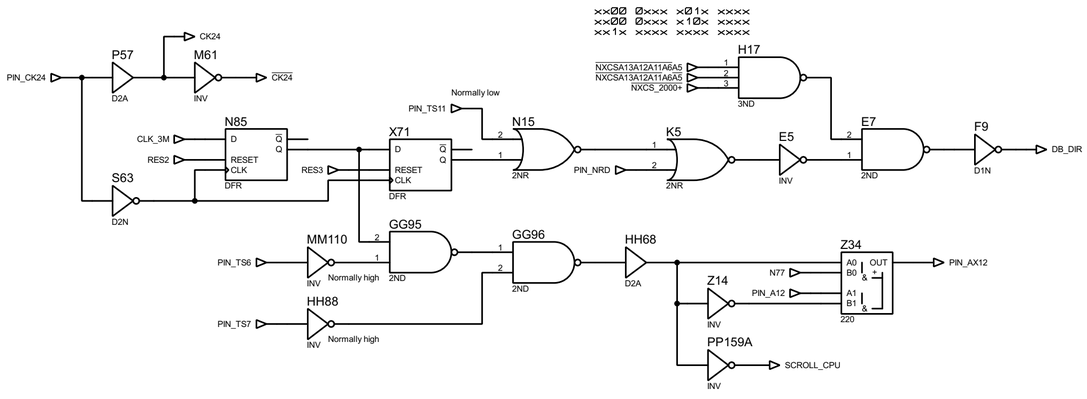

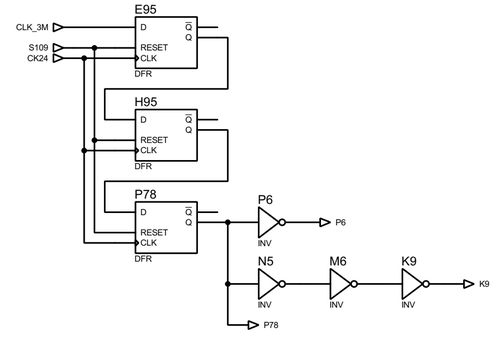

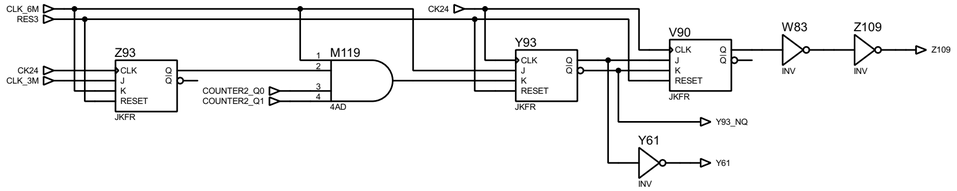

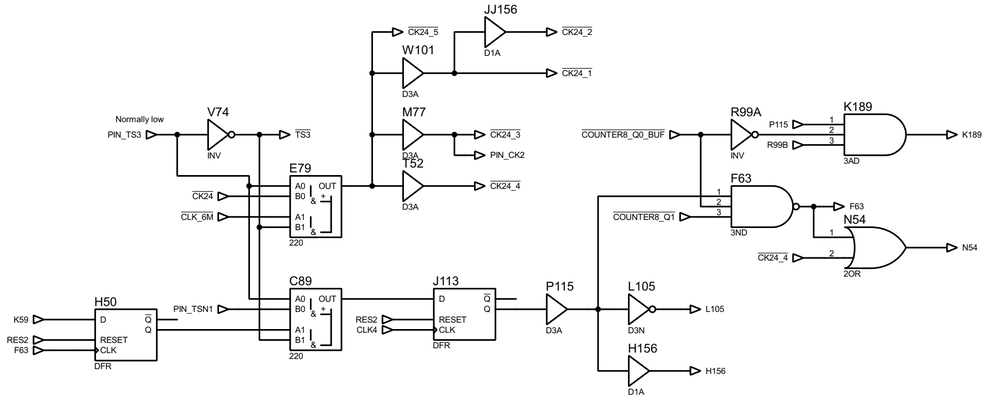

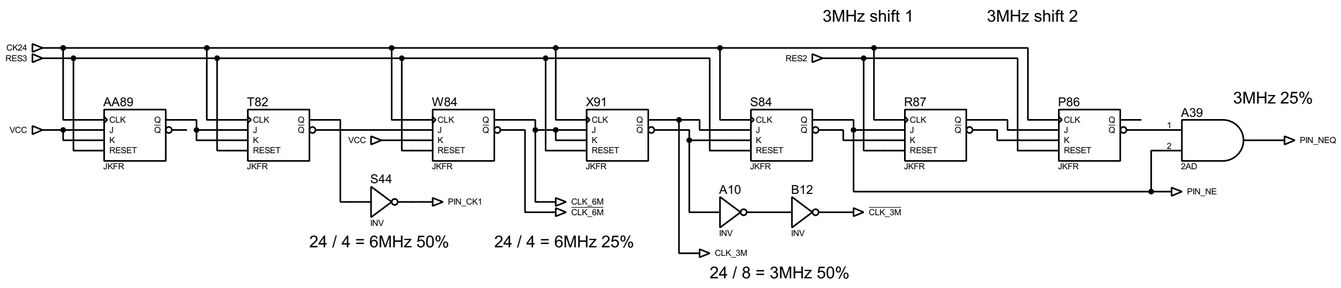

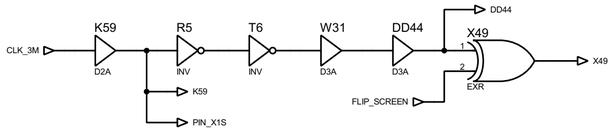

FILE NAME: **007121.pdsprj**	DATE: **31/03/2021**
DESIGN TITLE: **Konami 007121** CLOCK DIV	PAGE: **2 of 52**
BY: **Sean Gonsalves** REV: **0**	

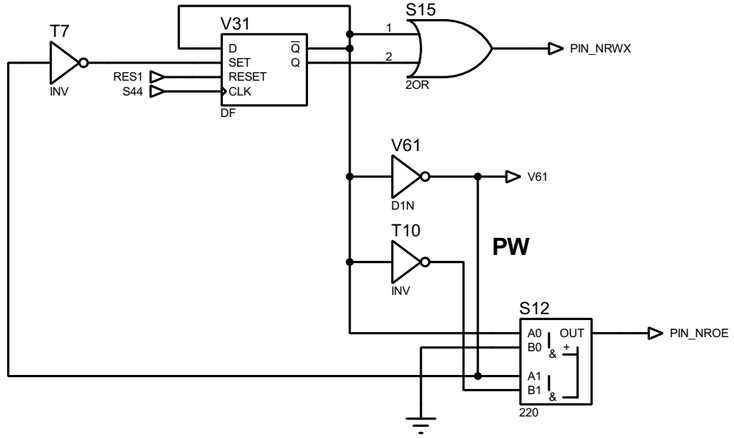

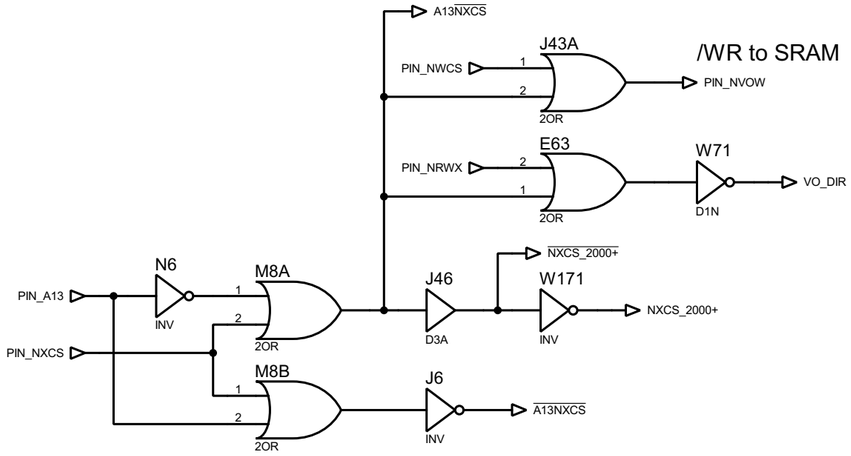

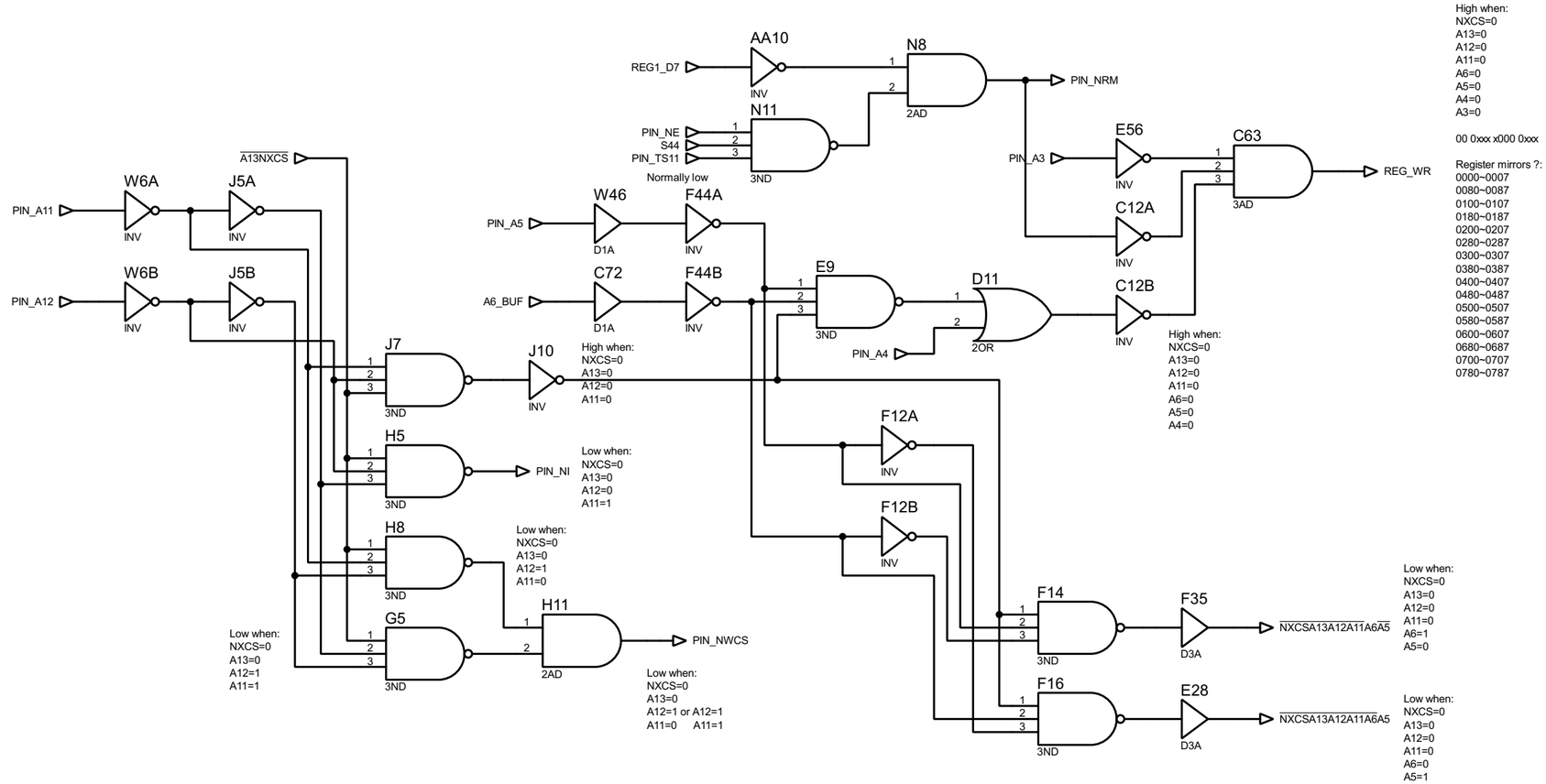

High when:
NXCS=0
A13=0
A12=0
A11=0
A6=0
A5=0
A4=0
A3=0

00 0xxx x000 0xxx

Register mirrors ?:
0000~0007
0080~0087
0100~0107
0180~0187
0200~0207
0280~0287
0300~0307
0380~0387
0400~0407
0480~0487
0500~0507
0580~0587
0600~0607
0680~0687
0700~0707
0780~0787

FILE NAME: **007121.pdsprj**	DATE: **31/03/2021**
DESIGN TITLE: **Konami 007121** ADDRESS DECODING	PAGE: **3 of 52**
BY: **Sean Gonsalves** REV: **0**	

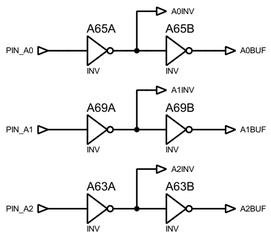

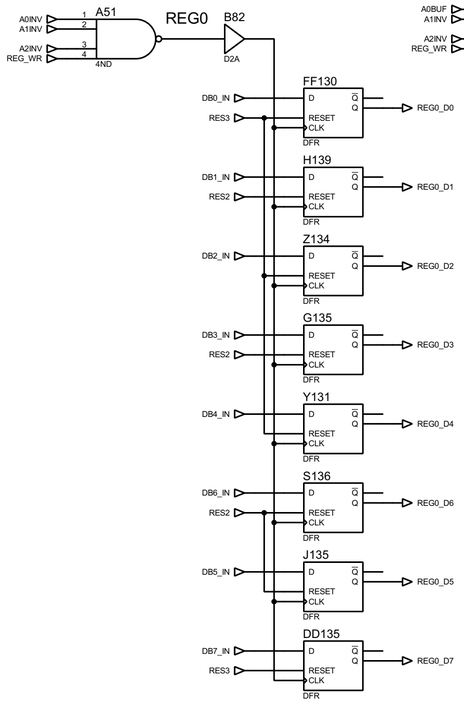

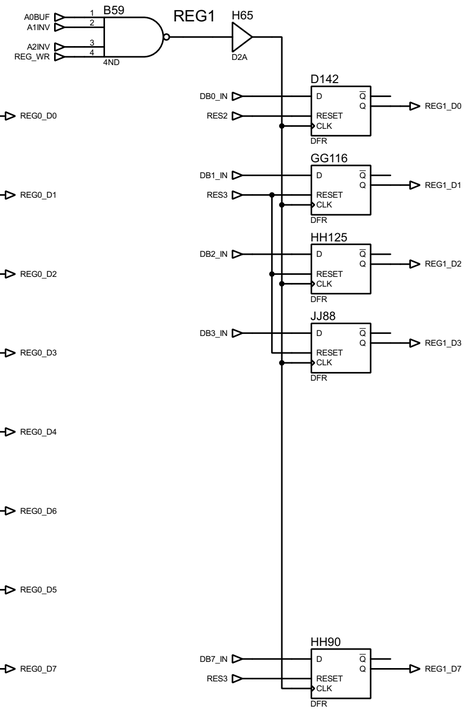

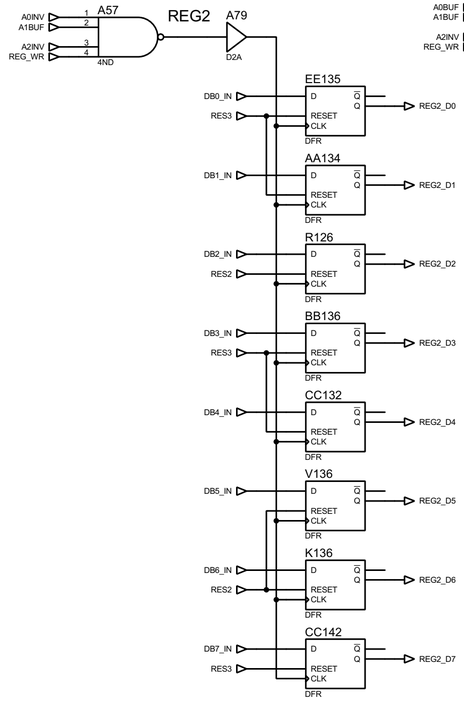

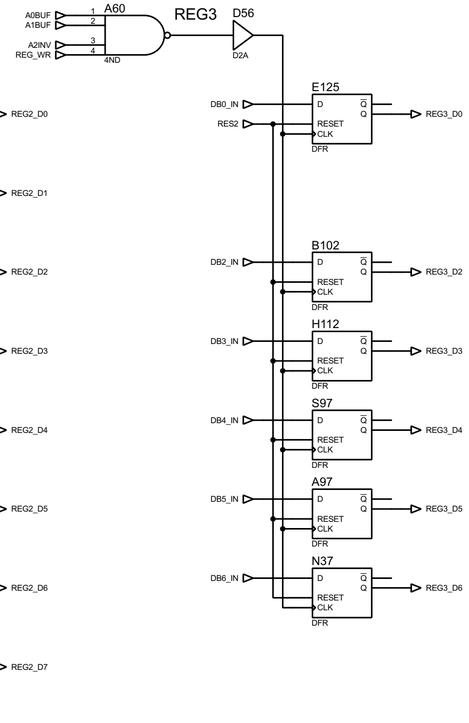

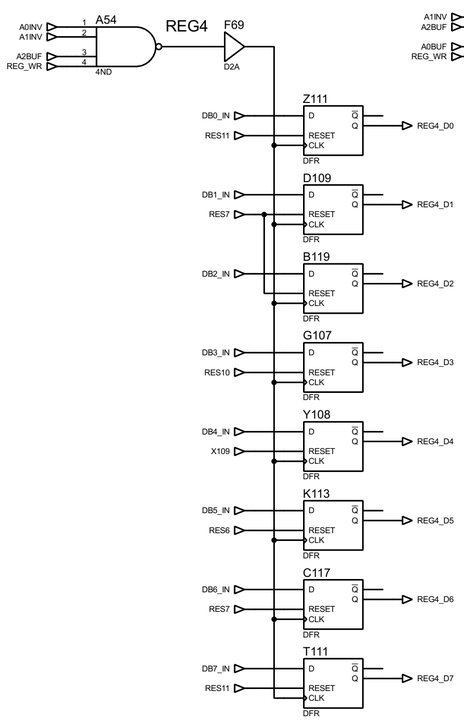

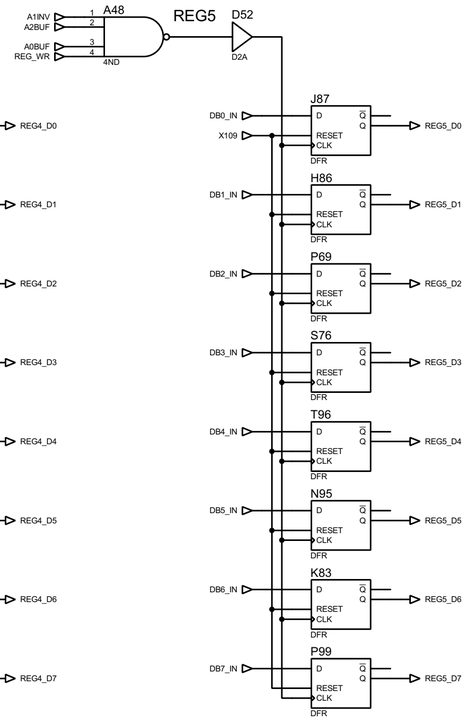

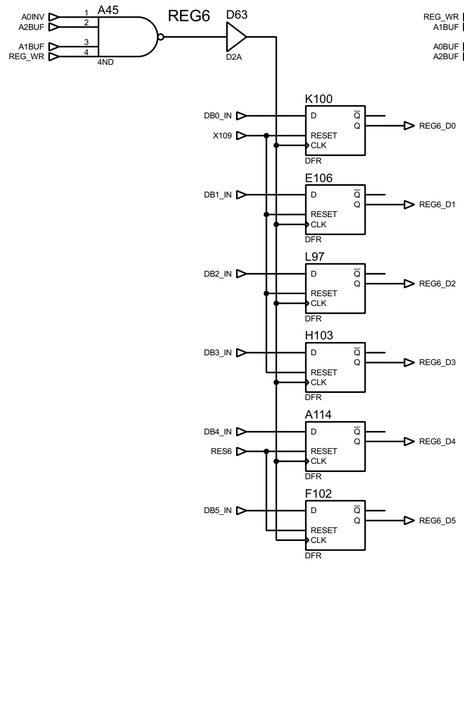

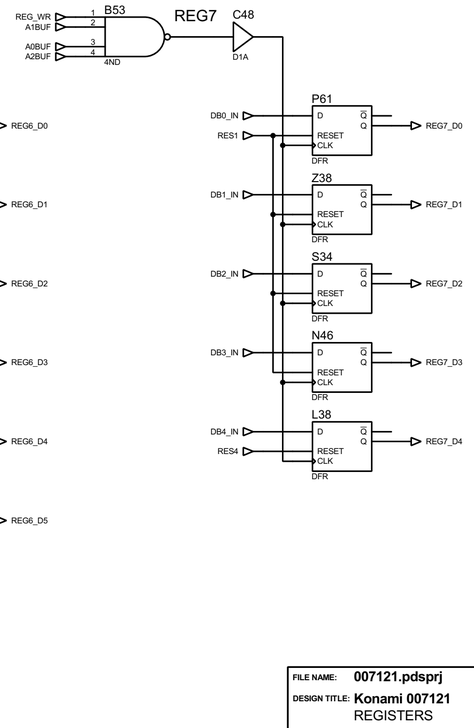

FILE NAME: **007121.pdsprj**		DATE: **31/03/2021**
DESIGN TITLE: **Konami 007121** REGISTERS		PAGE: **4 of 52**
BY: **Sean Gonsalves**	REV: **0**	

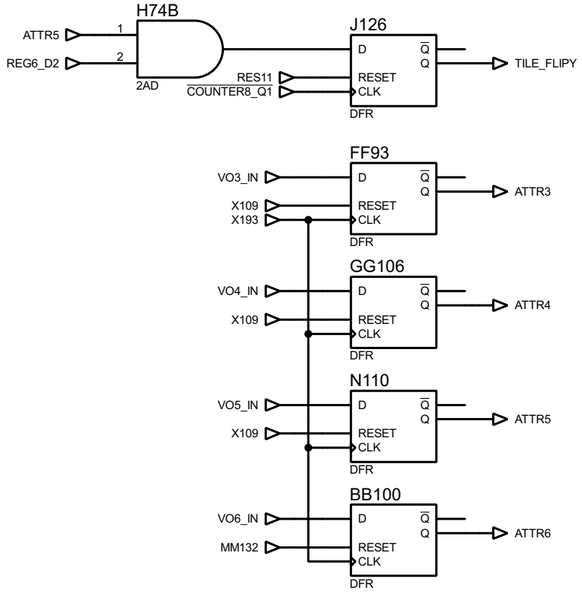

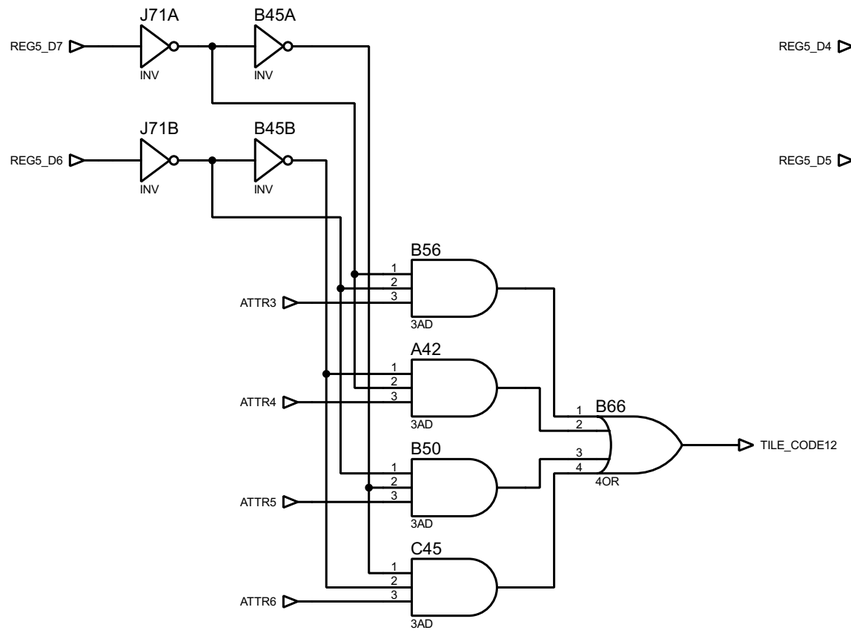

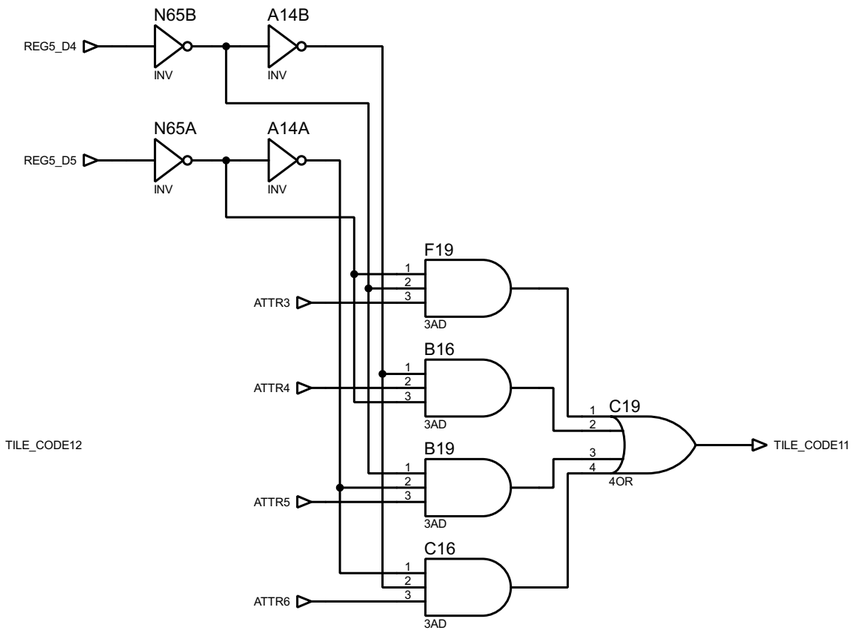

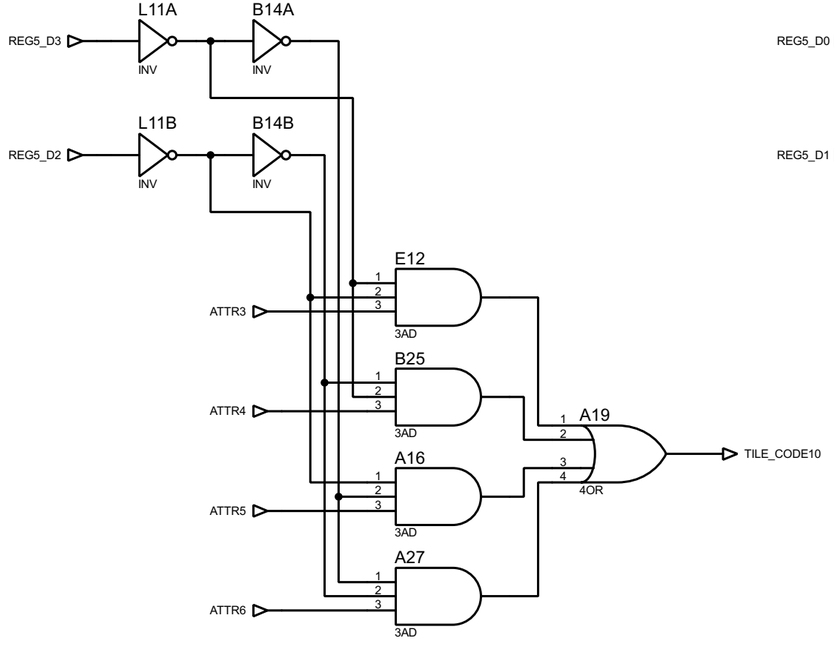

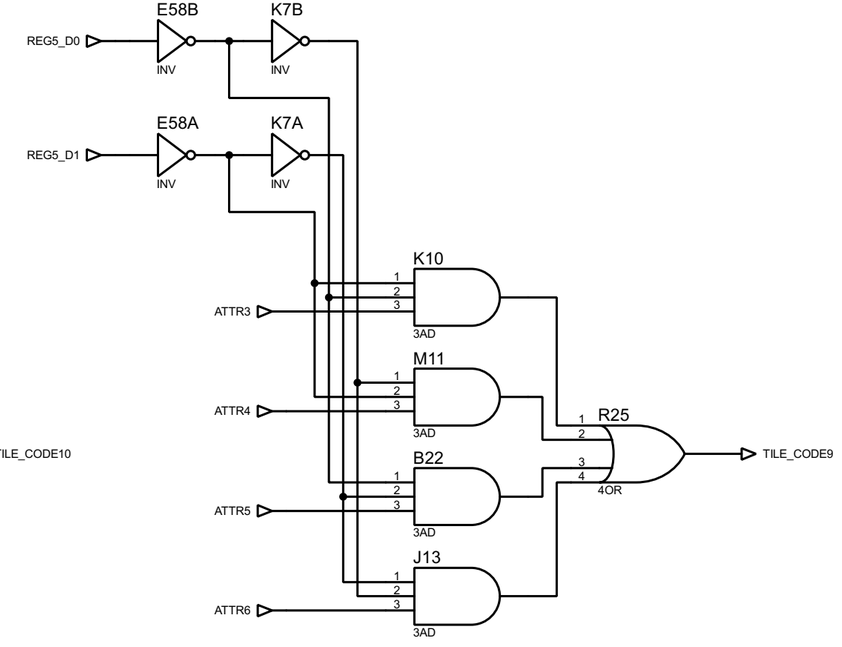

FILE NAME: **007121.pdsprj**		DATE: **31/03/2021**
DESIGN TITLE: **Konami 007121** REG5		PAGE: **5 of 52**
BY: **Sean Gonsalves**	REV: **0**	

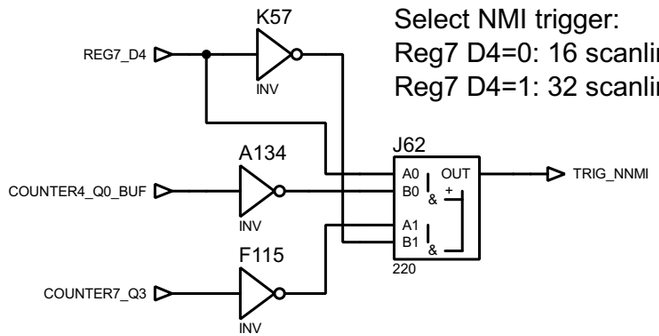

Select NMI trigger:
Reg7 D4=0: 16 scanlines
Reg7 D4=1: 32 scanlines

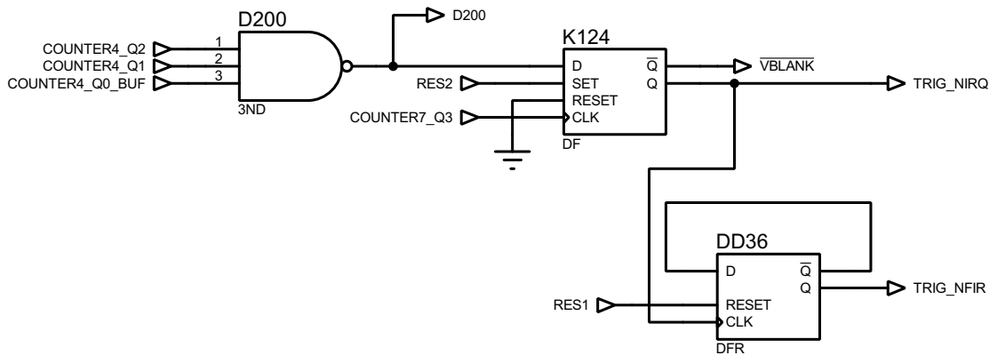

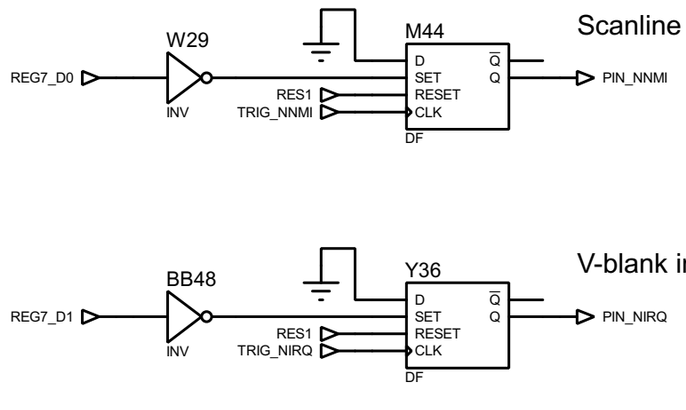

Scanline interrupt

V-blank interrupt

One-out-of-two v-blank interrupt ?

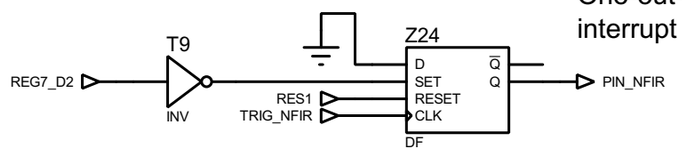

FILE NAME: **007121.pdsprj**	DATE: **31/03/2021**
DESIGN TITLE: **Konami 007121** INTERRUPTS	PAGE: **6 of 52**
BY: **Sean Gonsalves** REV: **0**	TIME: **06:44:38**

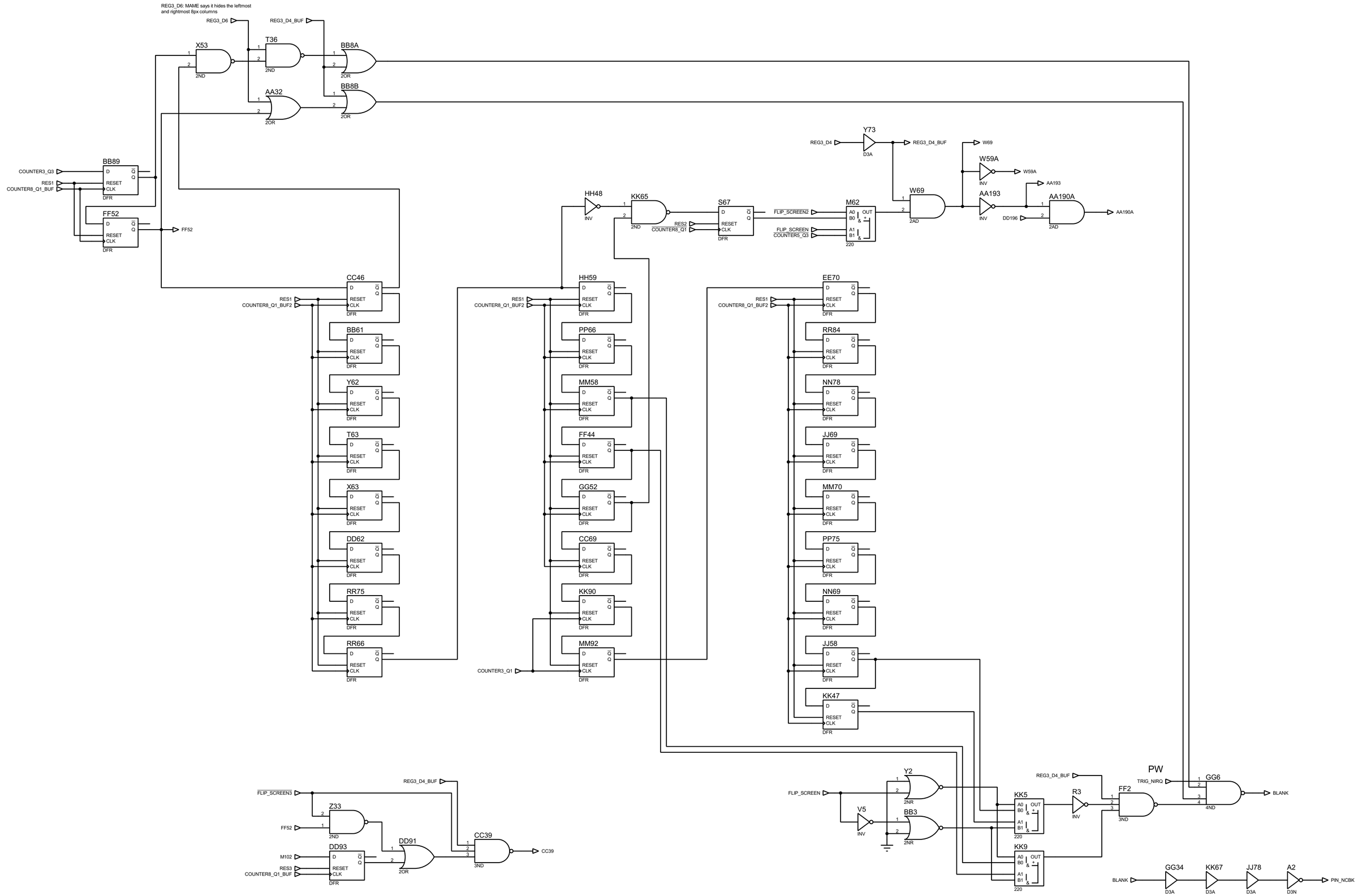
REG3_D6: MAME says it hides the leftmost and rightmost 8px columns
REG3_D6
REG3_D4_BUF
X53
T36
BB8A
AA32
BB8B
BB89
COUNTER3_Q3
RES1
COUNTER8_Q1_BUF
FF52
Y73
REG3_D4
W69
W59A
AA193
AA190A
DD196
HH48
KK65
S67
M62
FLIP_SCREEN2
FLIP_SCREEN
COUNTER5_Q3
RES2
COUNTER8_Q1
CC46
COUNTER8_Q1_BUF2
BB61
Y62
T63
X63
DD62
RR75
RR66
HH59
PP66
MM58
FF44
GG52
CC69
KK90
MM92
COUNTER3_Q1
EE70
RR84
NN78
JJ69
MM70
PP75
NN69
JJ58
KK47
Y2
V5
BB3
KK5
KK9
R3
FF2
PW
TRIG_NIRQ
GG6
BLANK
GG34
KK67
JJ78
A2
PIN_NCBK
FLIP_SCREEN3
Z33
DD93
M102
RES3
DD91
CC39
FILE NAME: 007121.pdsprj
DESIGN TITLE: Konami 007121
BLANKING
BY: Sean Gonsalves
REV: 0
DATE: 31/03/2021
PAGE: 7 of 52
TIME: 06:44:38

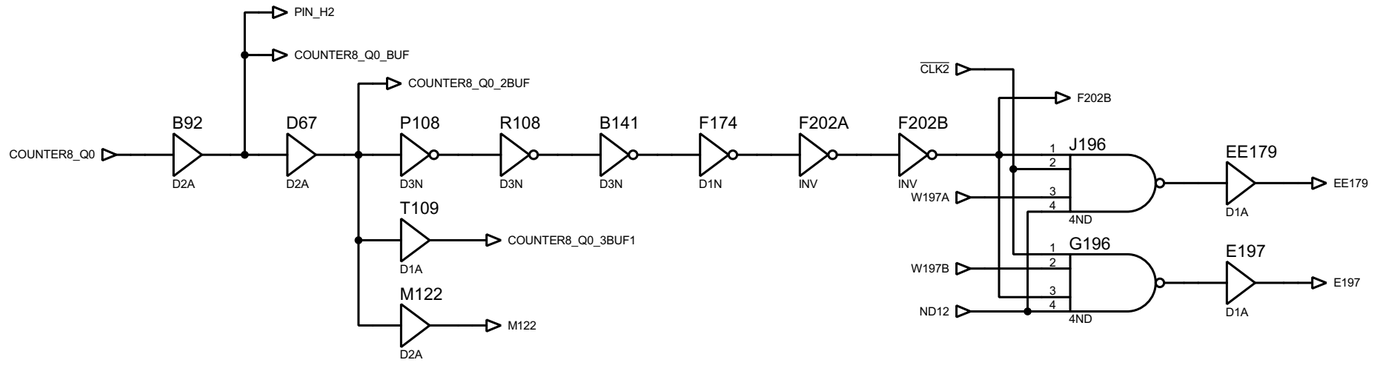

T109 or M112 must be an inverter ?

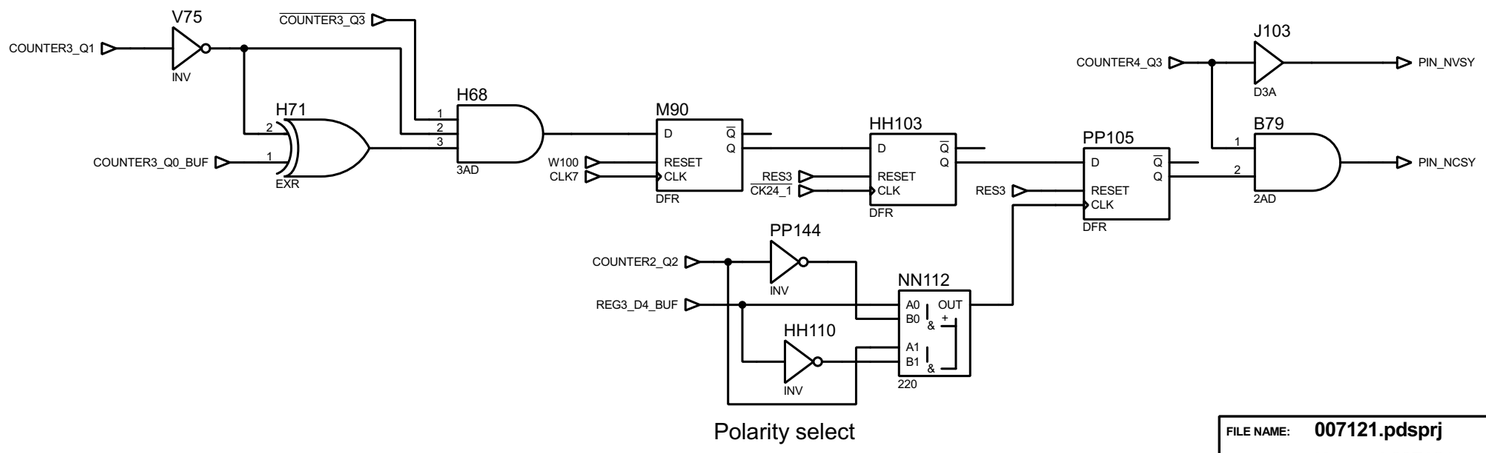

Polarity select

FILE NAME: **007121.pdsprj**		DATE: **31/03/2021**
DESIGN TITLE: **Konami 007121** VIDEO SYNC		PAGE: **8 of 52**
BY: **Sean Gonsalves**	REV: **0**	

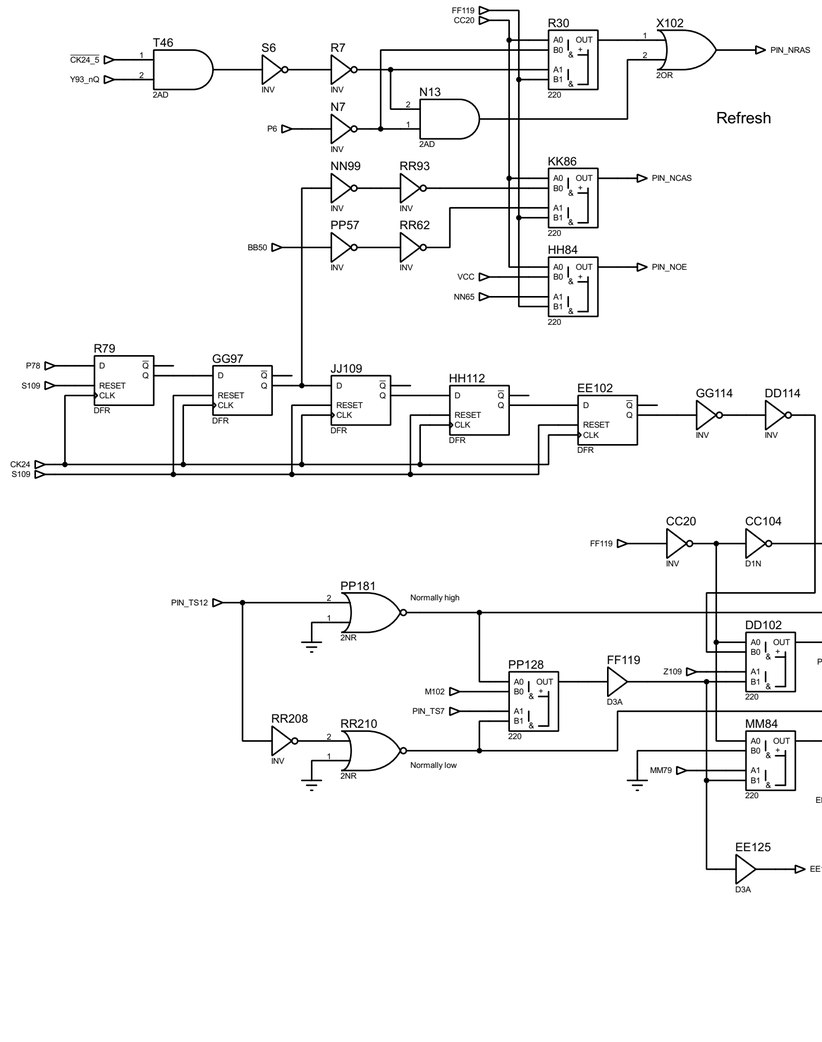

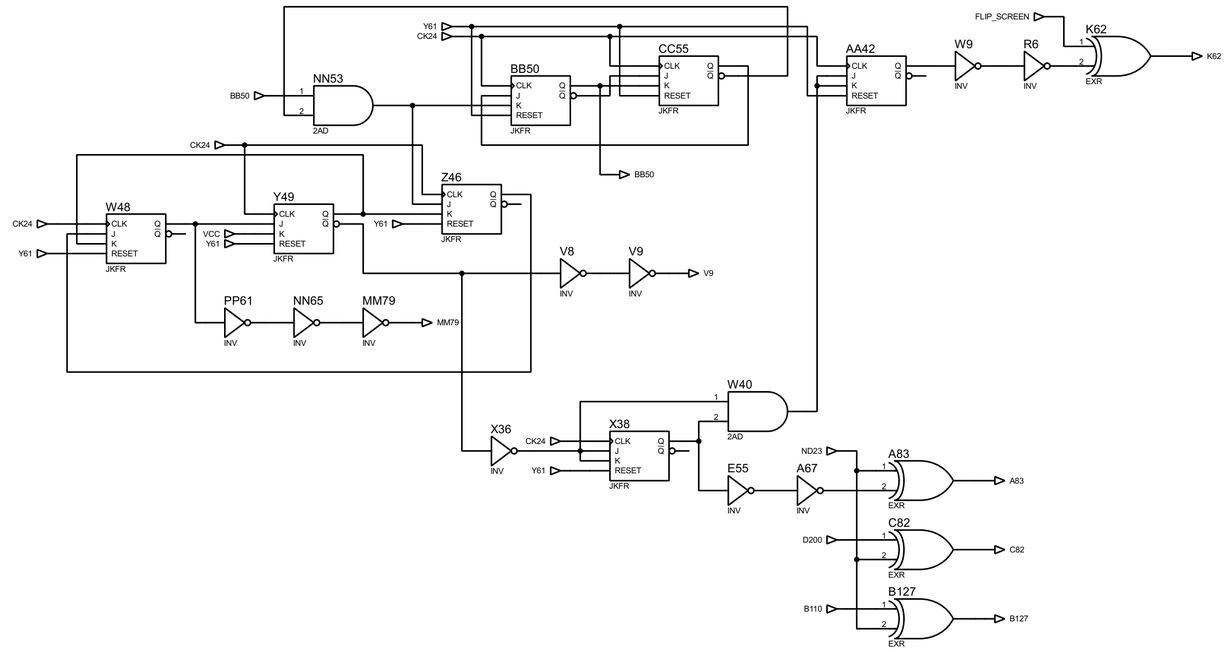

Pixel write

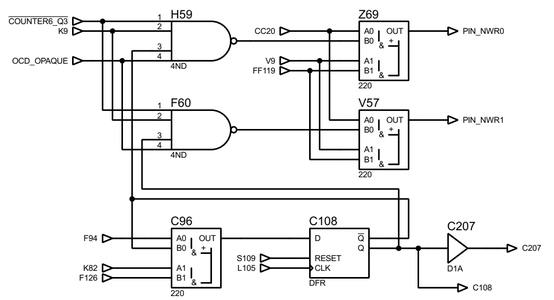

FILE NAME: **007121.pdsprj**		DATE: **31/03/2021**
DESIGN TITLE: **Konami 007121** DRAM CONTROL		PAGE: **9 of 52**
BY: **Sean Gonsalves**	REV: **0**	

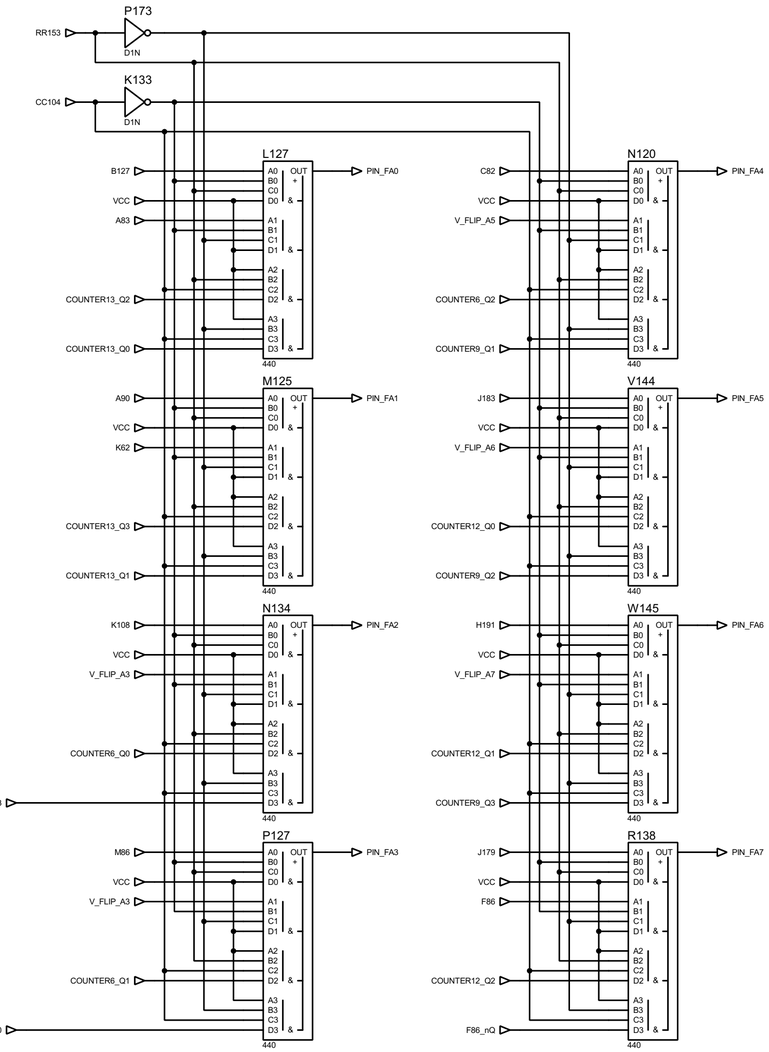

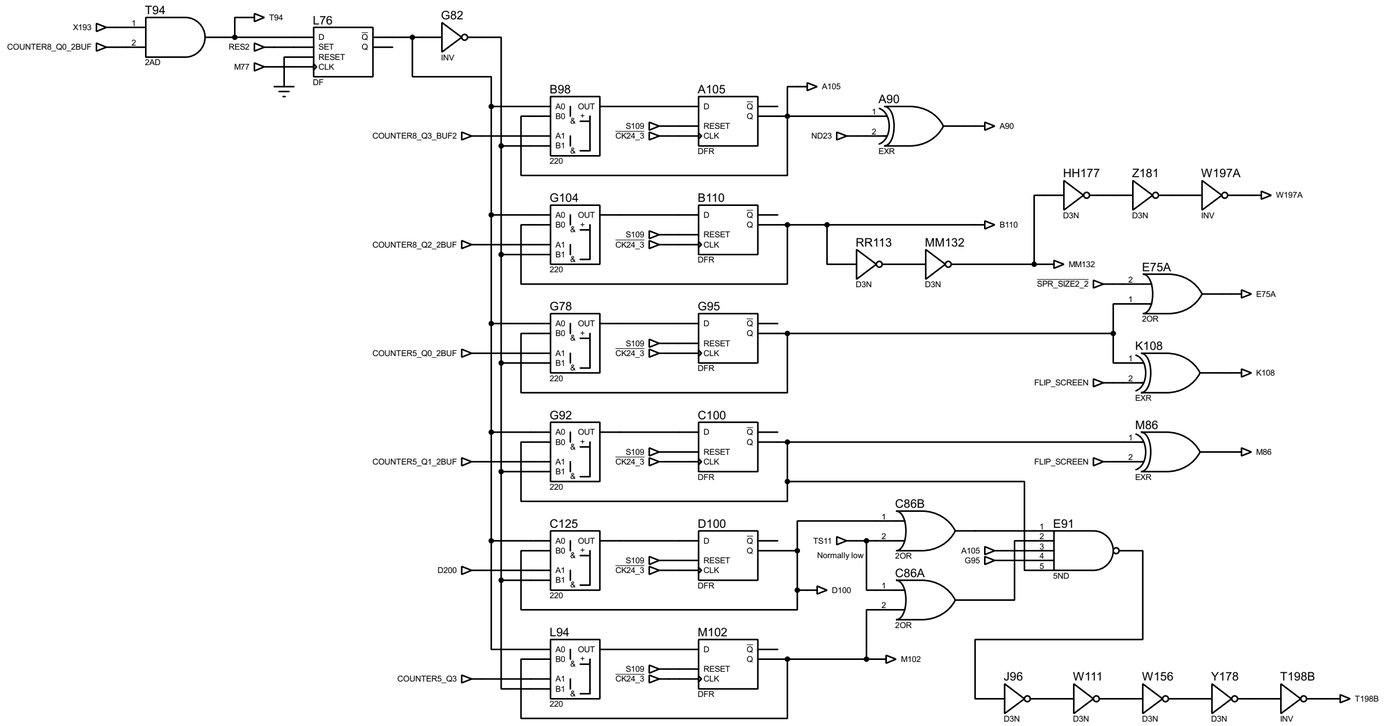

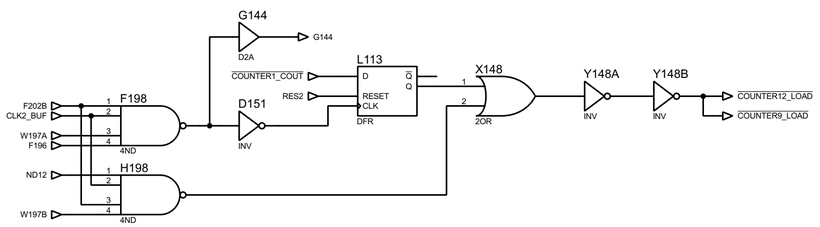

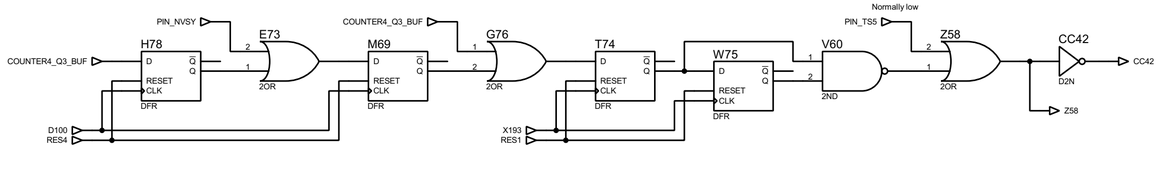

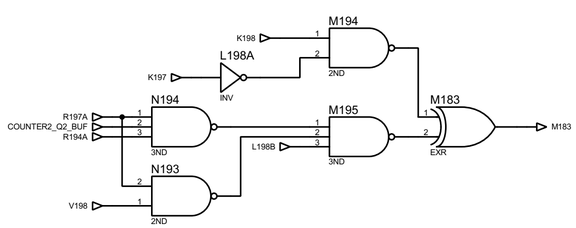

FILE NAME: 007121.pdsprj	DATE: 31/03/2021
DESIGN TITLE: Konami 007121 DRAM ADDRESS	PAGE: 10 of 52
BY: Sean Gonsalves REV: 0	TIME: 06:44:38

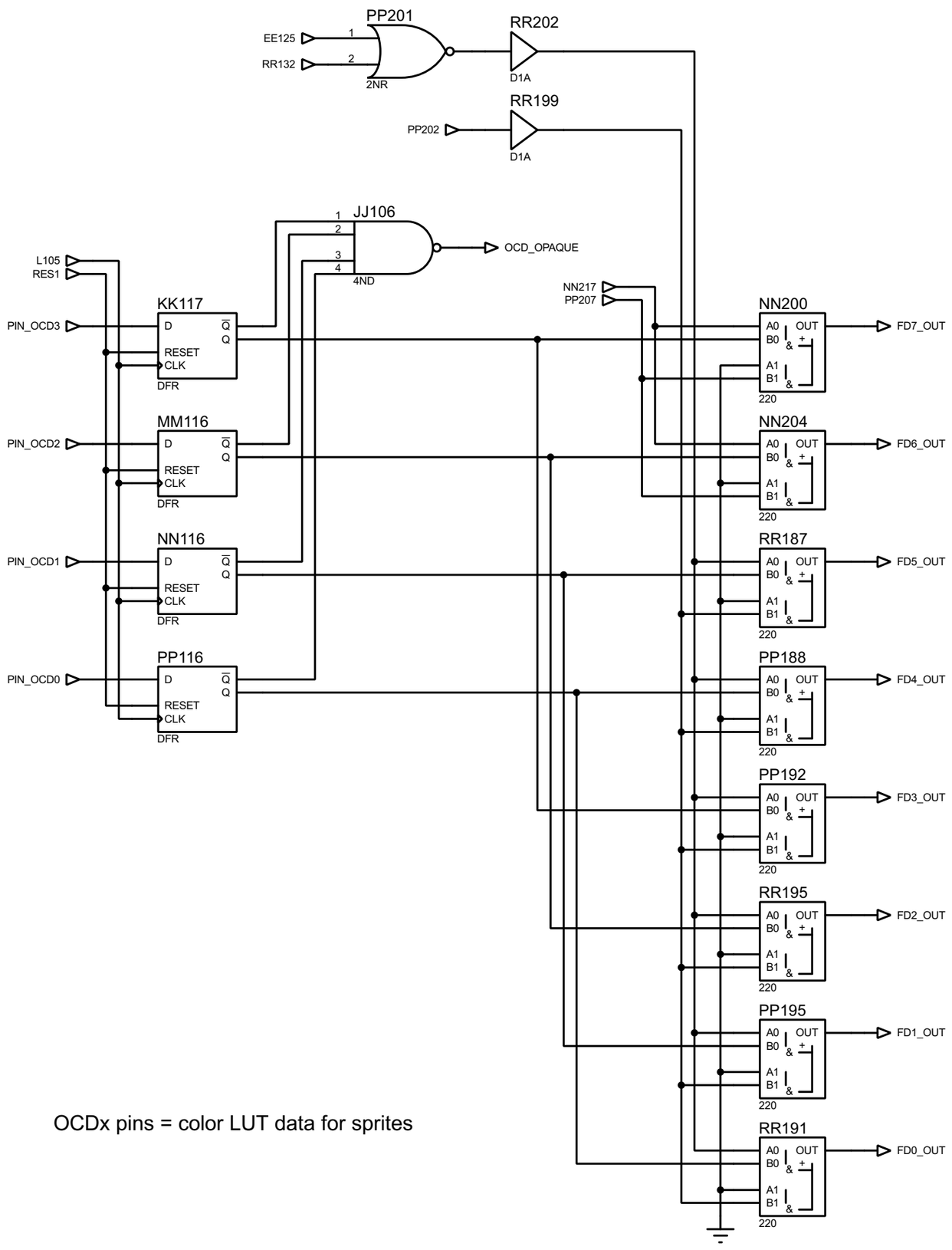

OCDx pins = color LUT data for sprites

FILE NAME: 007121.pdsprj	DATE: 31/03/2021
DESIGN TITLE: Konami 007121 DRAM DATA	PAGE: 11 of 52
BY: Sean Gonsalves REV: 0	TIME: 06:44:38

```
MAME says (video/k007121.cpp):

R0~R17 are the 18 GFX ROMs address lines:
110000000000000000
10FEDCBA9876543210

Tile code:
DCBA9876543210
||||||'- Tilemap[7]
|'''''-- Reg 4[3:0] or Tilemap[6:3]
'------ Reg 3[0]

TTTTTCCC

Color codes output to PROMs:
CCCCPPPP
||||''''- Pixel code
''''----- Color code for tile/sprite
```

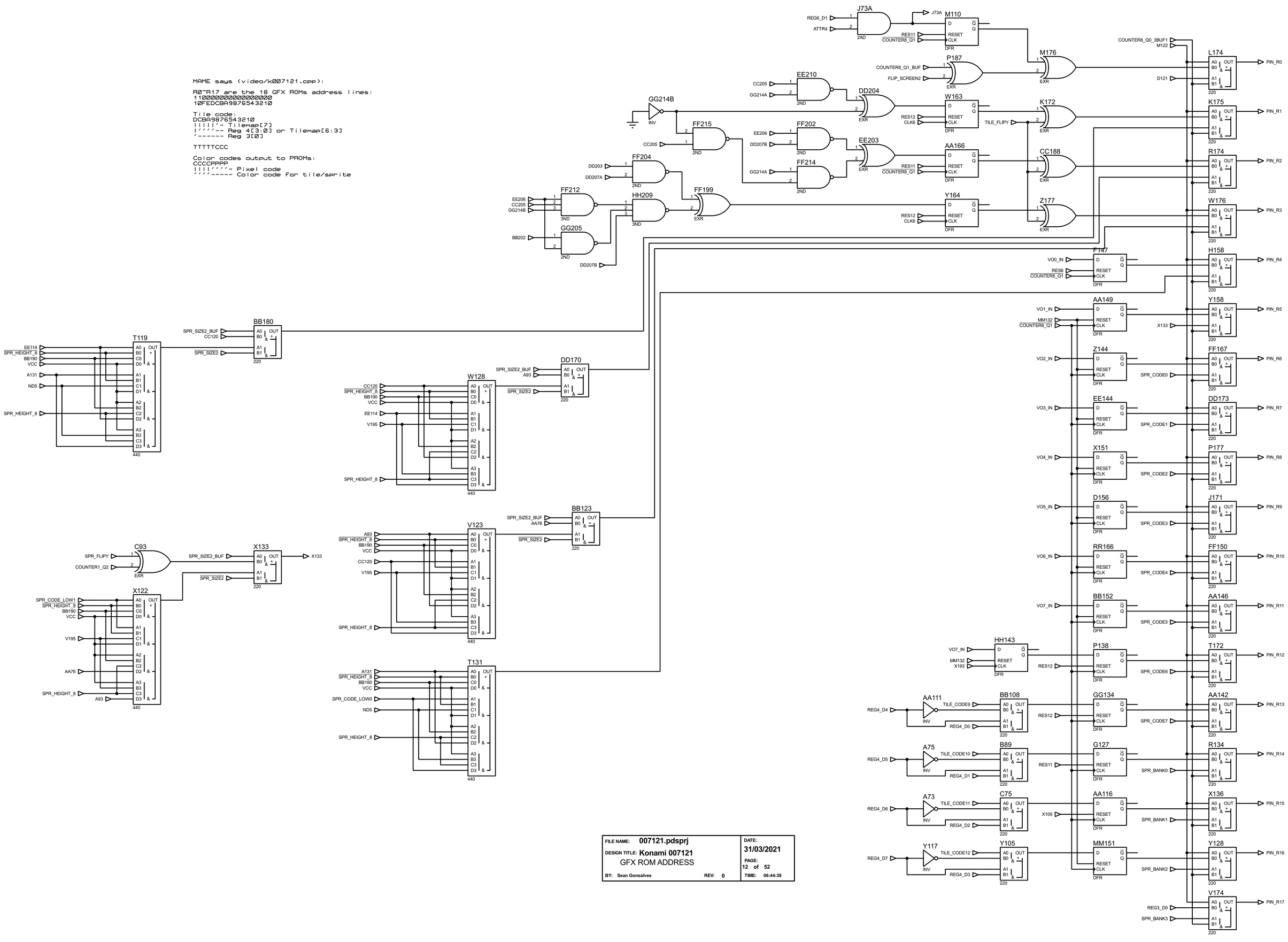

FILE NAME: **007121.pdsprj**			DATE: **31/03/2021**
DESIGN TITLE: **Konami 007121** GFX ROM ADDRESS			PAGE: **12 of 52**
BY: **Sean Gonsalves**	REV: **0**		TIME: **06:44:38**

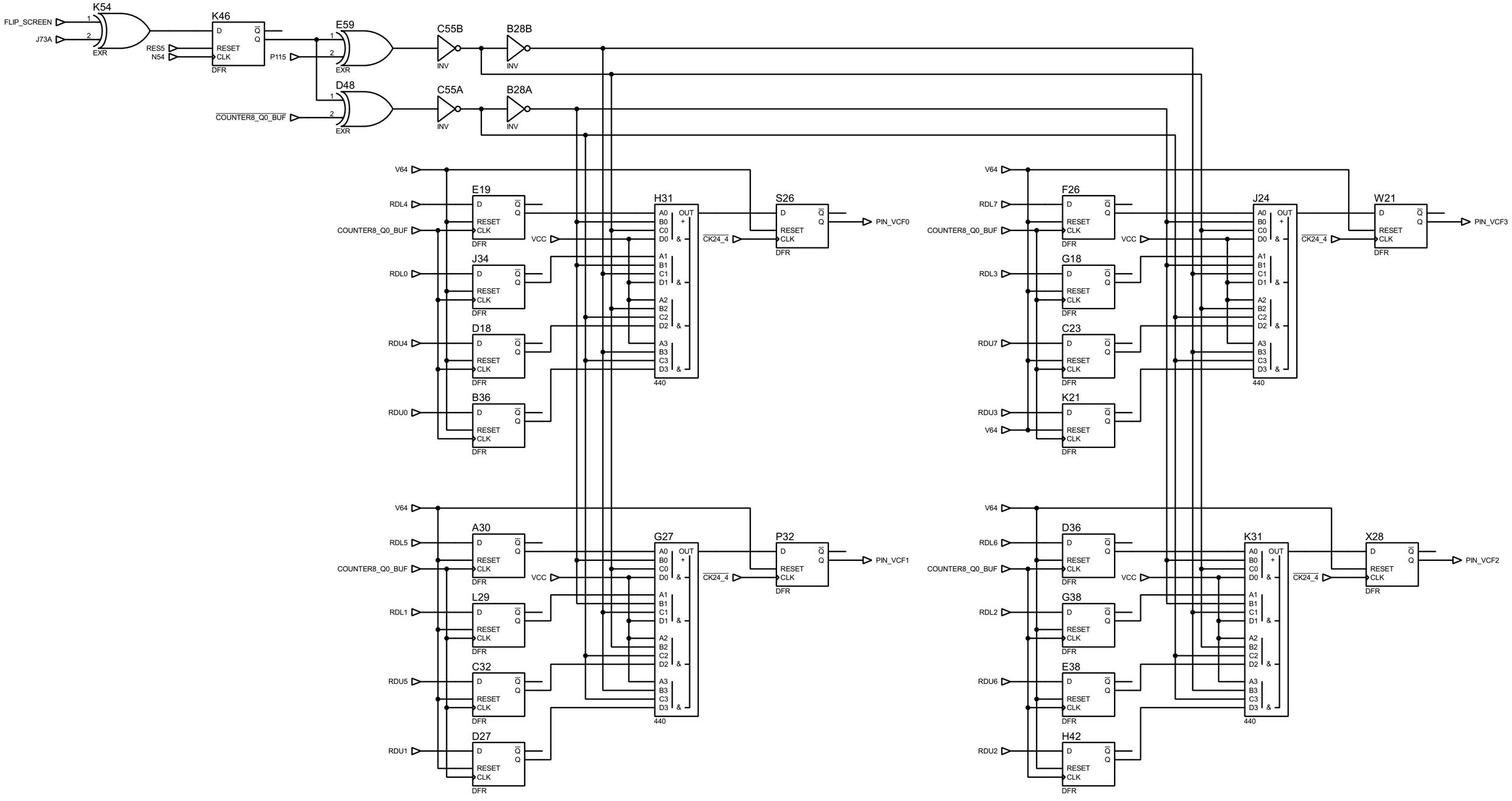

FILE NAME: **007121.pdsprj**		DATE: **31/03/2021**
DESIGN TITLE: **Konami 007121** GFX DATA INPUT		PAGE: **13 of 52**
BY: **Sean Gonsalves**	REV: **0**	TIME: **06:44:38**

VCBx VCFx pins = color LUT address for tiles

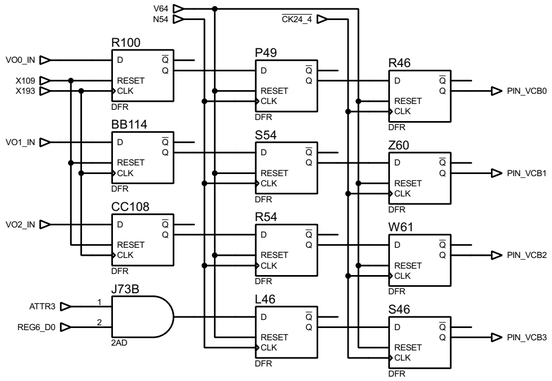

VCDx pins = color LUT data for tiles

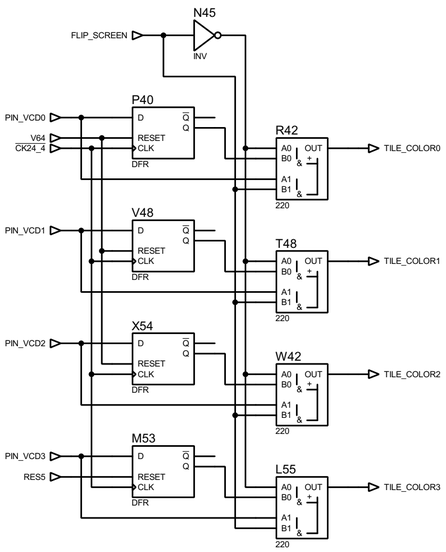

OCBx OCFx pins = color LUT address for sprites

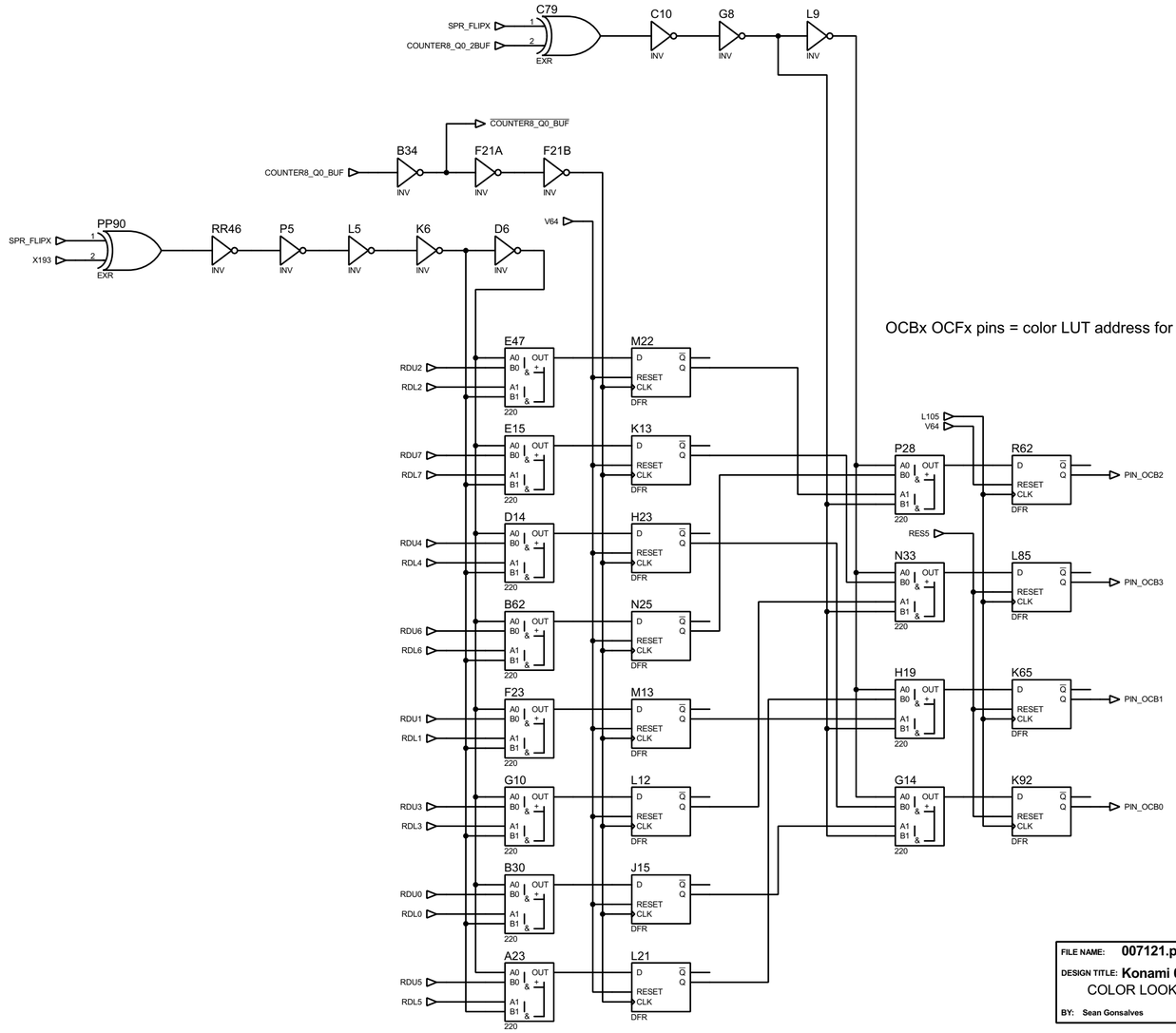

FILE NAME: 007121.pdsprj		DATE: 31/03/2021
DESIGN TITLE: Konami 007121 COLOR LOOKUP		PAGE: 14 of 52
BY: Sean Gonsalves	REV: 0	TIME: 06:44:38

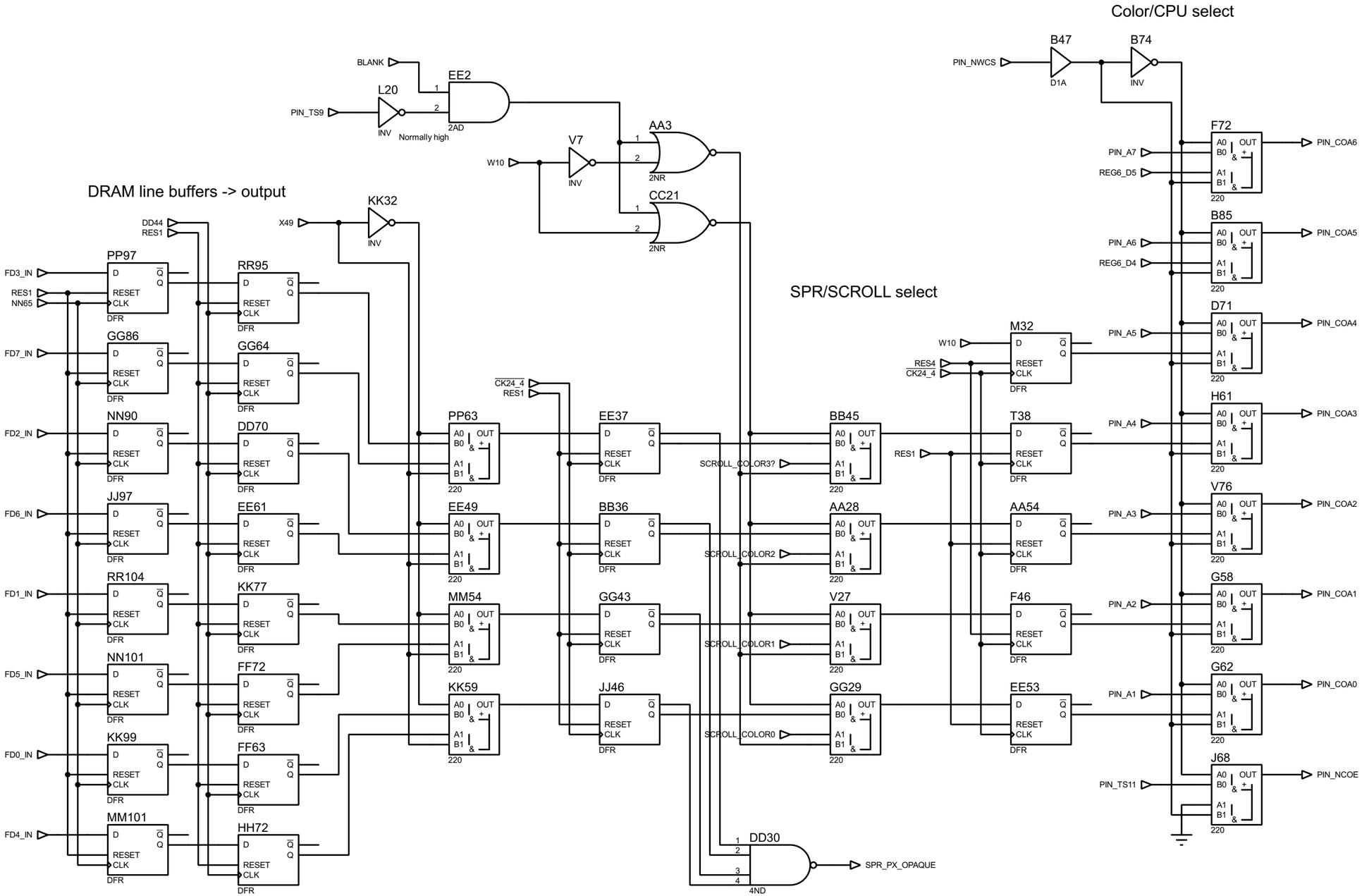

FILE NAME: **007121.pdsprj**		DATE: **31/03/2021**
DESIGN TITLE: **Konami 007121** COLOR OUTPUT		PAGE: **15 of 52**
BY: **Sean Gonsalves**	REV: **0**	

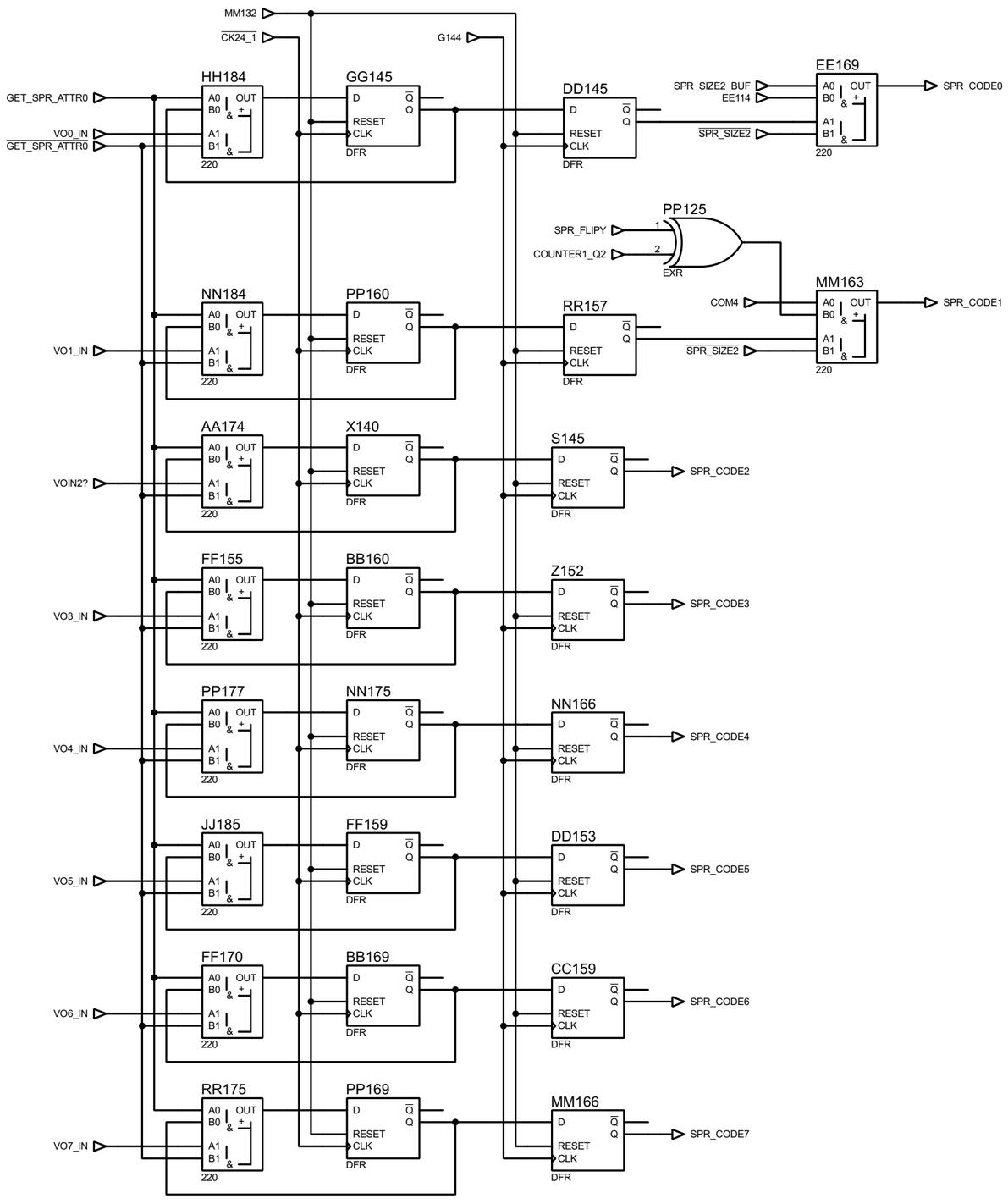

FILE NAME:	007121.pdsprj		DATE: 31/03/2021
DESIGN TITLE:	Konami 007121 SPR ATTR 0 (TILE #)		PAGE: 16 of 52
BY: Sean Gonsalves		REV: 0	

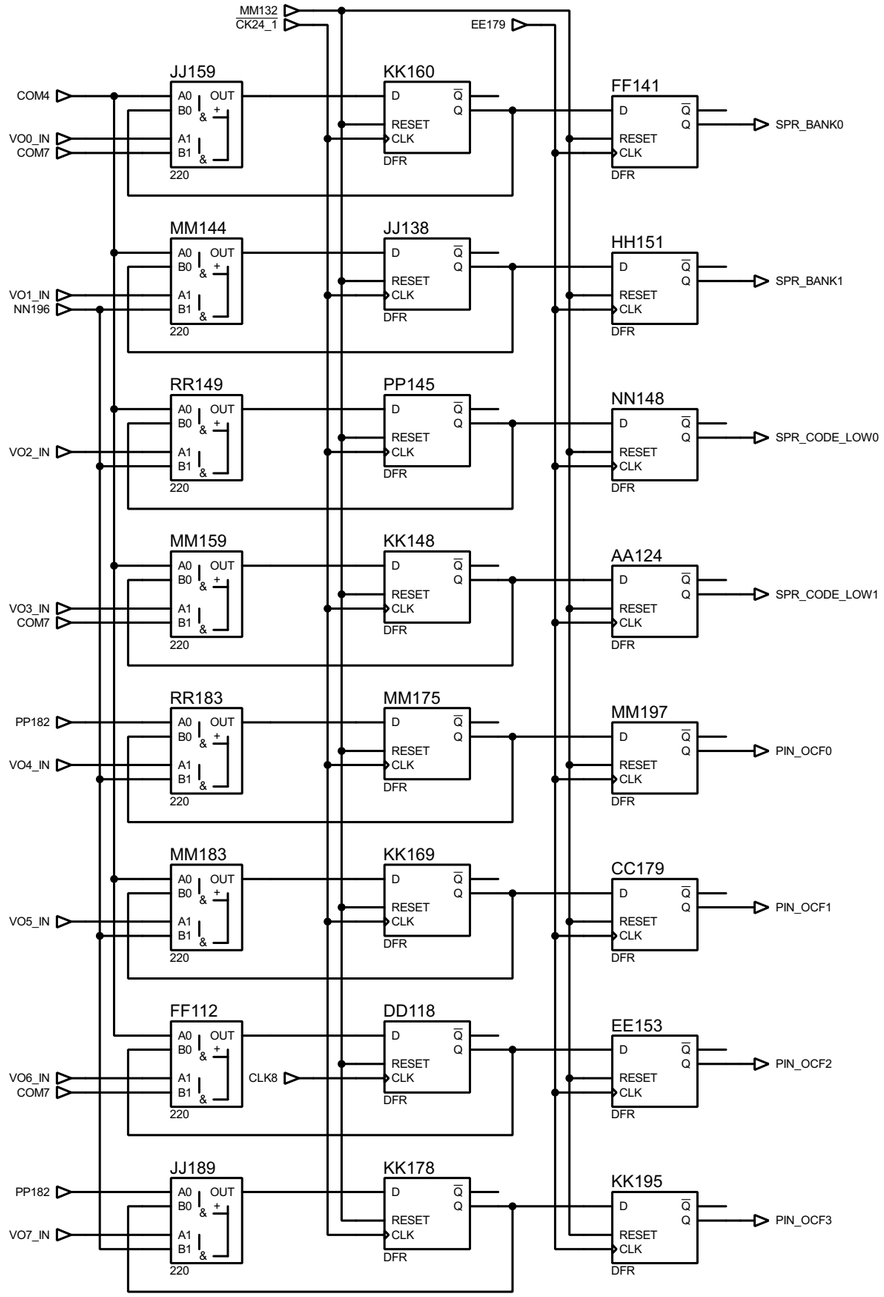

FILE NAME: **007121.pdsprj**		DATE: **31/03/2021**
DESIGN TITLE: **Konami 007121** SPR ATTR 1		PAGE: **17 of 52**
BY: **Sean Gonsalves**	REV: **0**	

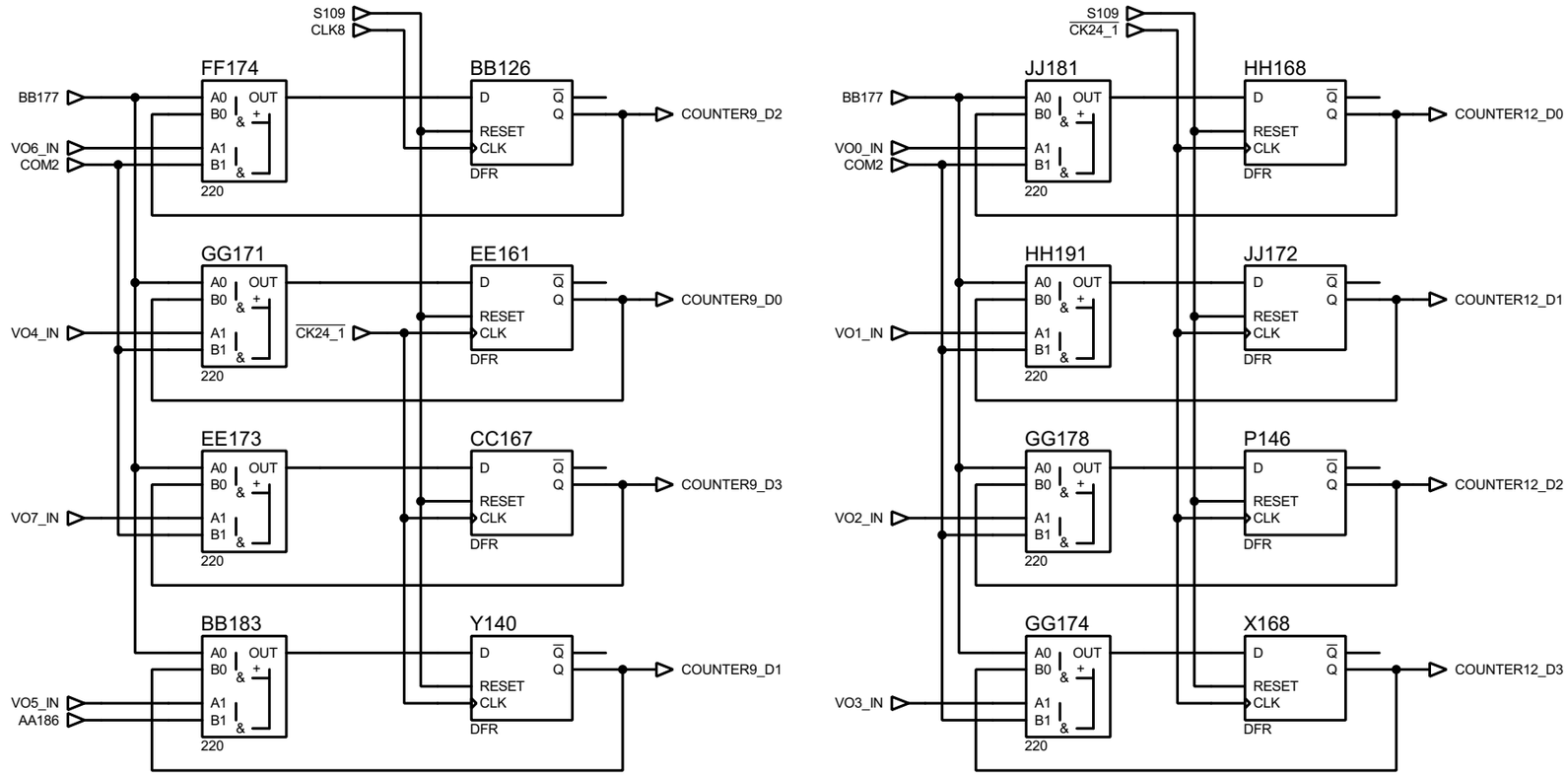

FILE NAME: **007121.pdsprj**		DATE: **31/03/2021**
DESIGN TITLE: **Konami 007121** SPR ATTR 2		PAGE: **18 of 52**
BY: **Sean Gonsalves**	REV: **0**	TIME: **06:44:38**

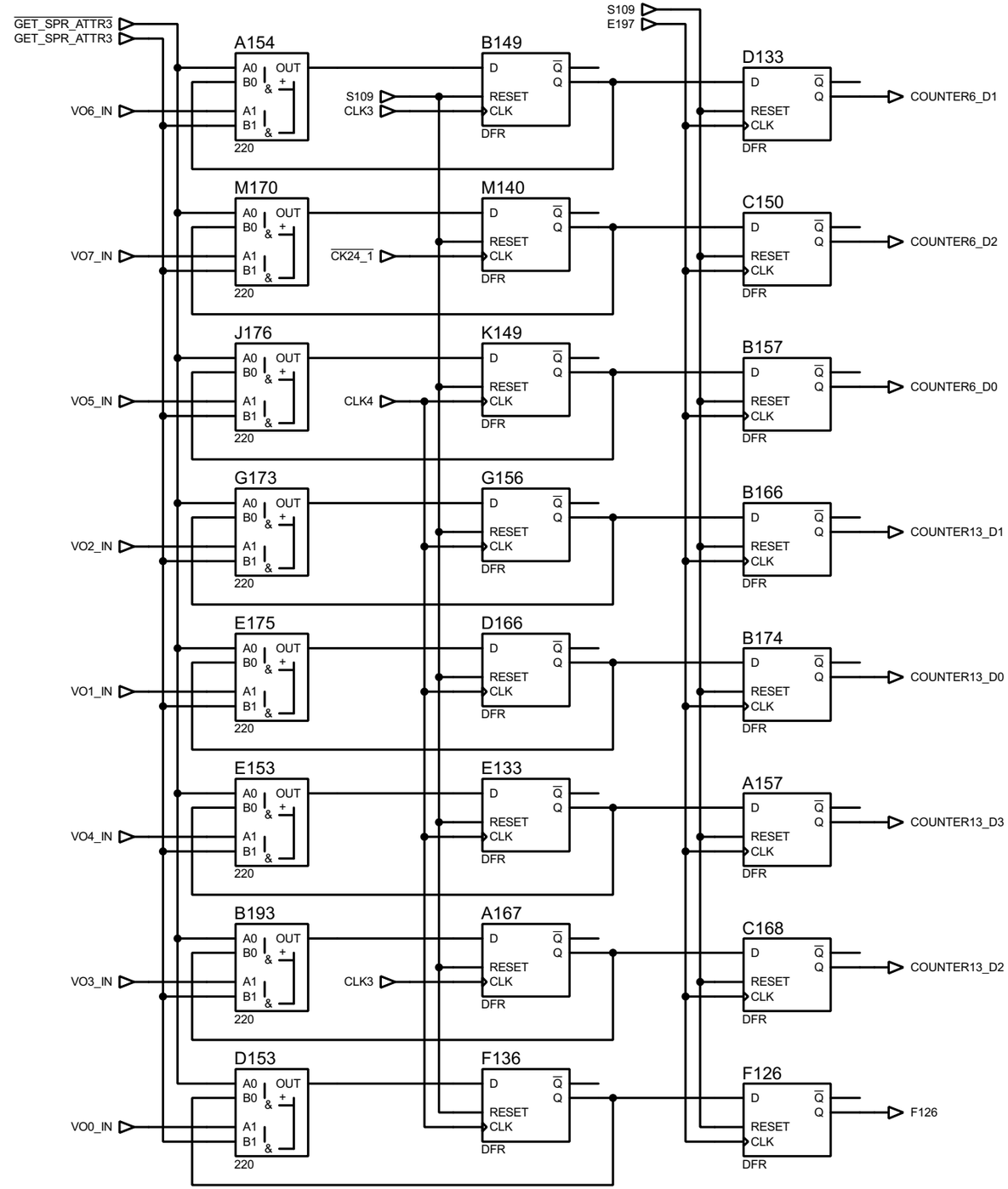

FILE NAME: **007121.pdsprj**		DATE: **31/03/2021**
DESIGN TITLE: **Konami 007121** SPR ATTR 3 (X POS)		PAGE: **19 of 52**
BY: **Sean Gonsalves**	REV: **0**	

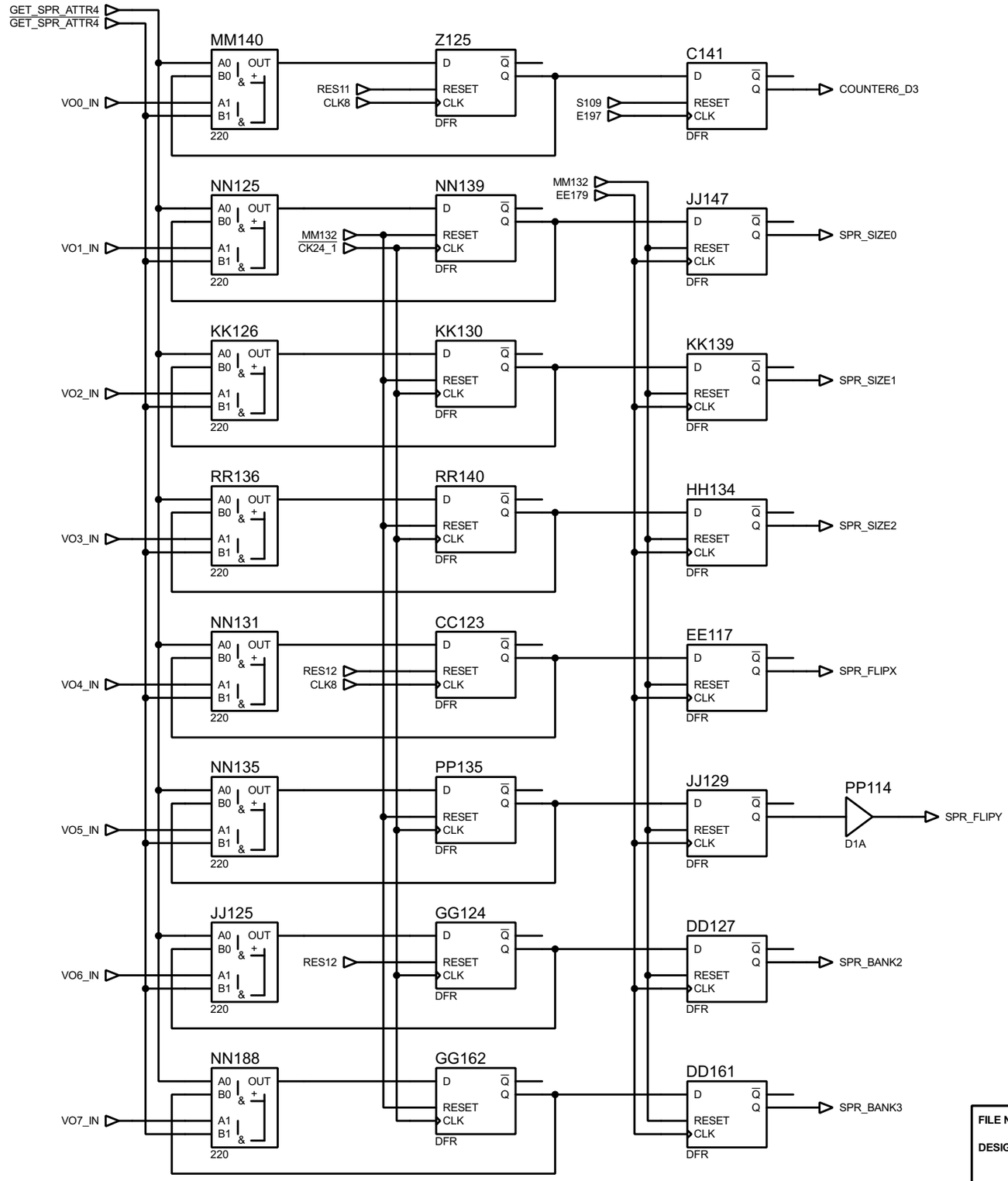

FILE NAME:	007121.pdsprj		DATE: 31/03/2021
DESIGN TITLE:	Konami 007121 SPR ATTR 4		PAGE: 20 of 52
BY: Sean Gonsalves		REV: 0	

Select X scroll value
between REG1 or scroll RAM

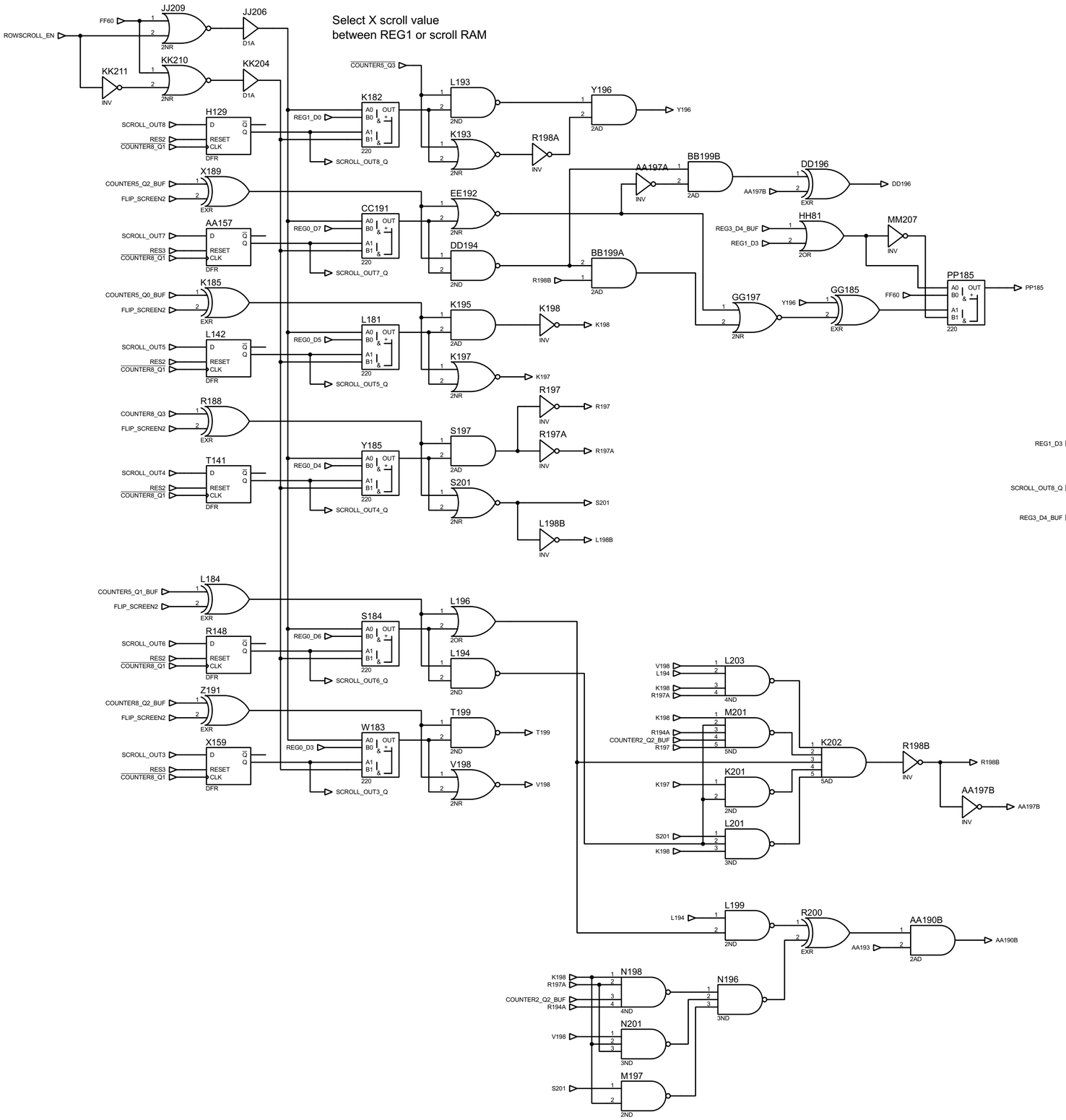

FILE NAME: 007121.pdsprj		DATE: 31/03/2021
DESIGN TITLE: Konami 007121 SCROLL X		PAGE: 21 of 52
BY: Sean Gonsalves	REV: 0	TIME: 06:44:38

Select Y scroll value
between REG2 or scroll RAM

HH204 INV
COLSCROLL_EN
KK208 2NR
FF60
GG194 2NR

NN214 INV
COLSCROLL_EN
NN208 2NR
FF60
NN209 2NR
NN211 D1A
GG192 D1A

CC195 A0 B0 A1 B1 OUT 220
REG2_D7
SCROLL_OUT7_Q
V_FLIP_A7
Y176 2ND
BB197 2OR
BB197

X186 A0 B0 A1 B1 OUT 220
REG2_D5
SCROLL_OUT5_Q
V_FLIP_A5
W195 2AD
AA198 INV
V194 2NR
W197B INV
W197B

Z188 A0 B0 A1 B1 OUT 220
REG2_D6
SCROLL_OUT6_Q
V_FLIP_A6
Y198 2AD
Z202 INV
X199 2NR
AA199A INV
AA199A

DD183 A0 B0 A1 B1 OUT 220
REG2_D4
SCROLL_OUT4_Q
V_FLIP_A4
FF188 2ND
EE191 2NR

DD180 A0 B0 A1 B1 OUT 220
REG2_D3
SCROLL_OUT3_Q
V_FLIP_A3
EE189 2ND
DD192 2OR
DD192
BB187 AA199B INV
AA199B

BB187 A0 B0 A1 B1 OUT 220
REG2_D2
SCROLL_OUT2_Q
J179
Z199 2AD
DD203 INV
Y201 2NR

AA180 A0 B0 A1 B1 OUT 220
REG2_D1
SCROLL_OUT1_Q
H191
AA194 2AD
EE206 INV
CC201 2NR

DD176 A0 B0 A1 B1 OUT 220
REG2_D0
SCROLL_OUT0_Q
J183
CC205 2ND
BB202 2NR

GG211 4ND
EE206
GG214B

GG203 3ND
BB202
EE206

DD207A INV
DD207A

CC201
DD207B INV
DD207B

FF203 2ND
DD203

GG214A INV
GG214A

FF210 4ND
EE189
DD203
EE206

GG207 5ND
GG214B

FF206 5AD
DD192

GG199B INV
GG199B

DD209 2ND

EE208 3ND
CC201

KK207 2ND
BB197

KK191 EXR
KK191

CC202 4ND
Z202
GG199B

DD200 3ND
AA198

EE197 4ND
DD199 2ND
BB187
AA199A

FF194 2ND
DD192

HH195 EXR
NN195

GG200 4ND
DD207A

MM210 2ND
GG199A

RR179 EXR
GG199B
RR179

JJ210 2ND
AA198
AA199B

MM194 EXR
MM194

GG199A INV
GG199A
EE191

JJ204 2ND

JJ205 2ND
FF188
GG199B

R33 D3A
W59B INV
REG7_D3
FLIP_SCREEN1

N67 D3A
K30 INV
FLIP_SCREEN2

P125 D1A
FLIP_SCREEN2

N130 INV
FLIP_SCREEN3

X196 D1A
FLIP_SCREEN3

FLIP_SCREEN

FILE NAME: 007121.pdsprj	DATE: 31/03/2021
DESIGN TITLE: Konami 007121 SCROLL Y	PAGE: 22 of 52
BY: Sean Gonsalves REV: 0	

Scroll RAM address decode ?

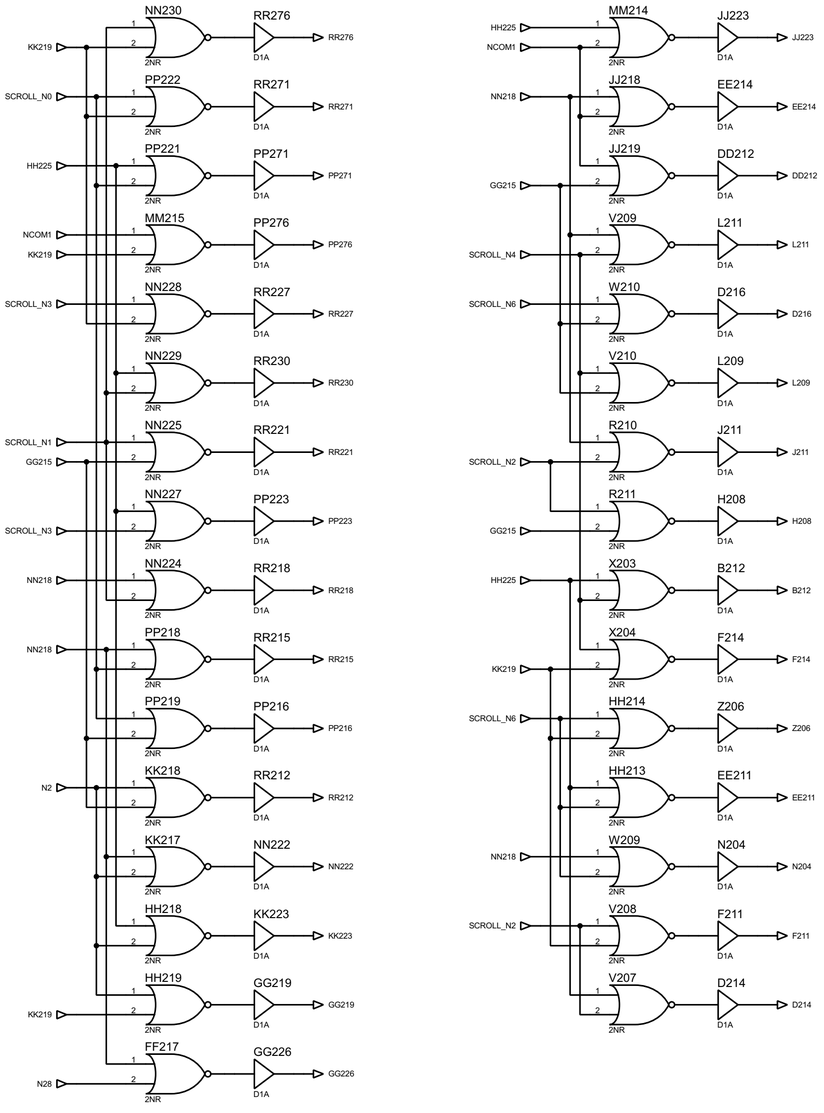

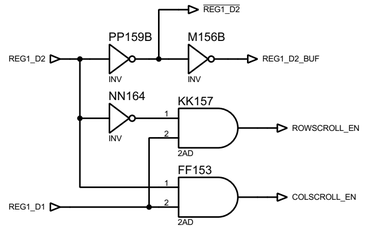

CPU write: select previous/new value

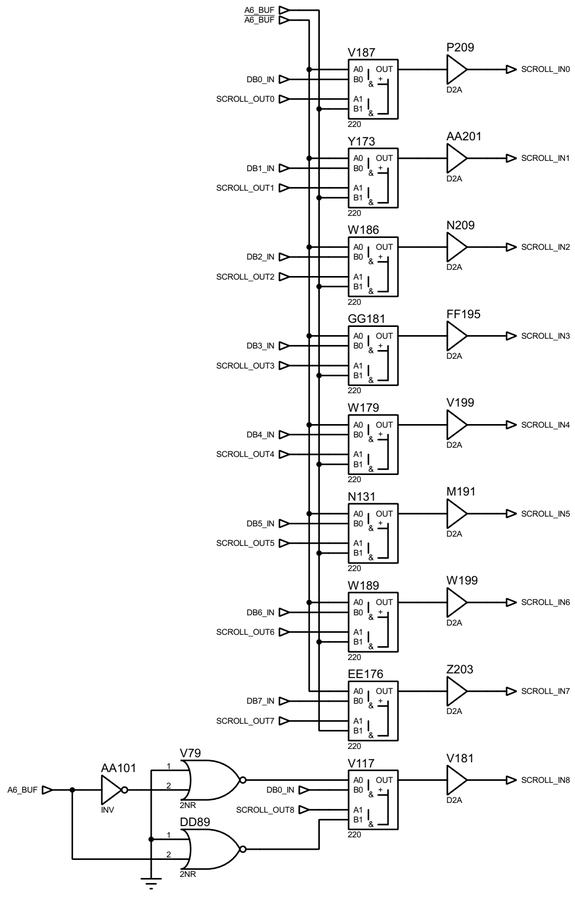

CPU read: select VRAM/scroll RAM

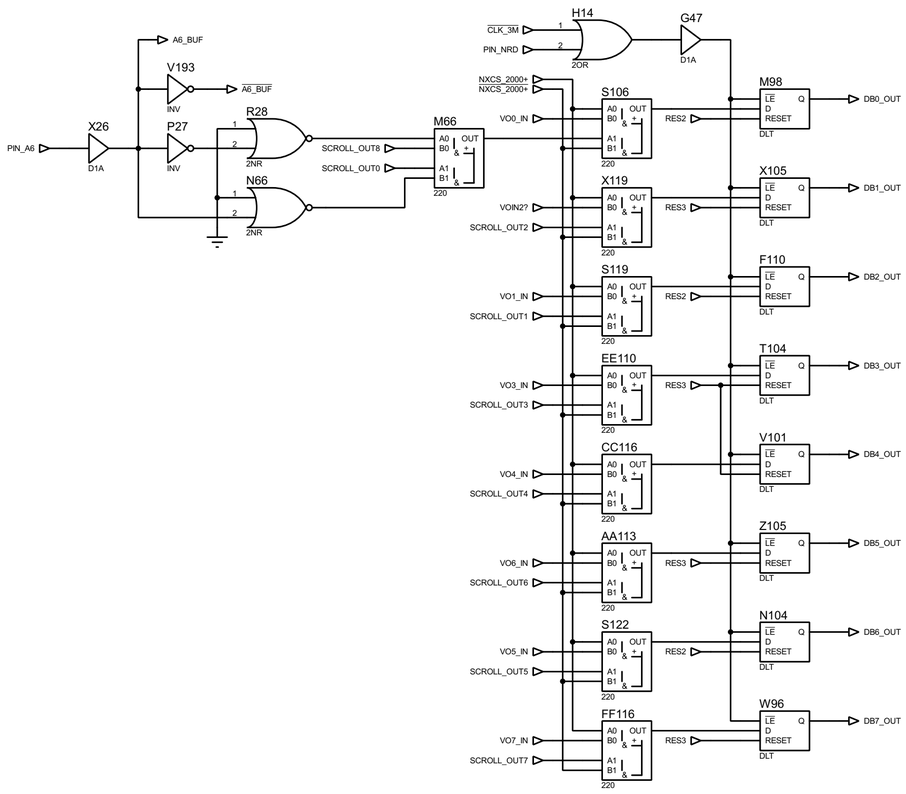

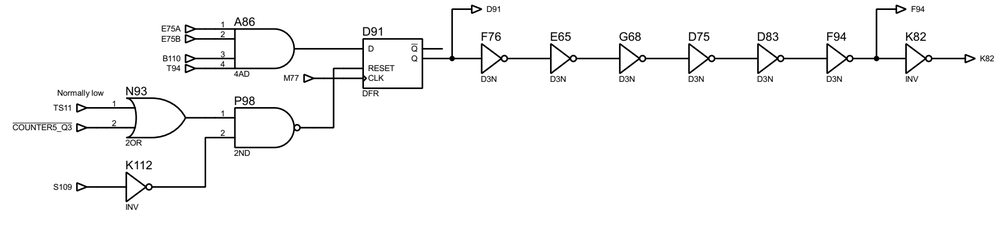

FILE NAME: 007121.pdsprj		DATE: 31/03/2021	
DESIGN TITLE: Konami 007121 SCROLL RAM ACCESS		PAGE: 23 of 52	
BY: Sean Gonsalves	REV: 0	TIME: 06:44:38	

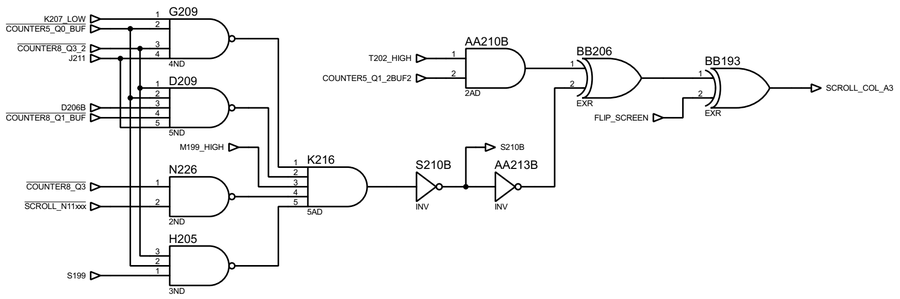

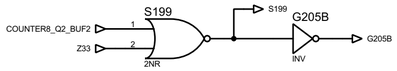

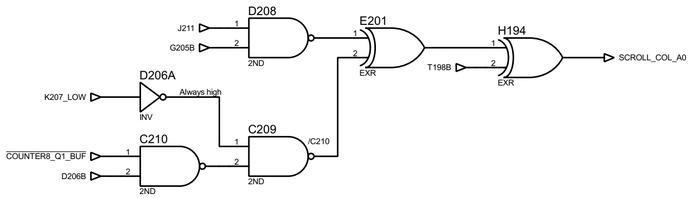

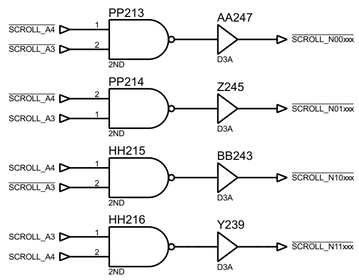

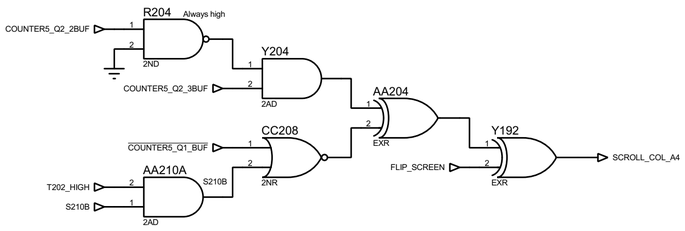

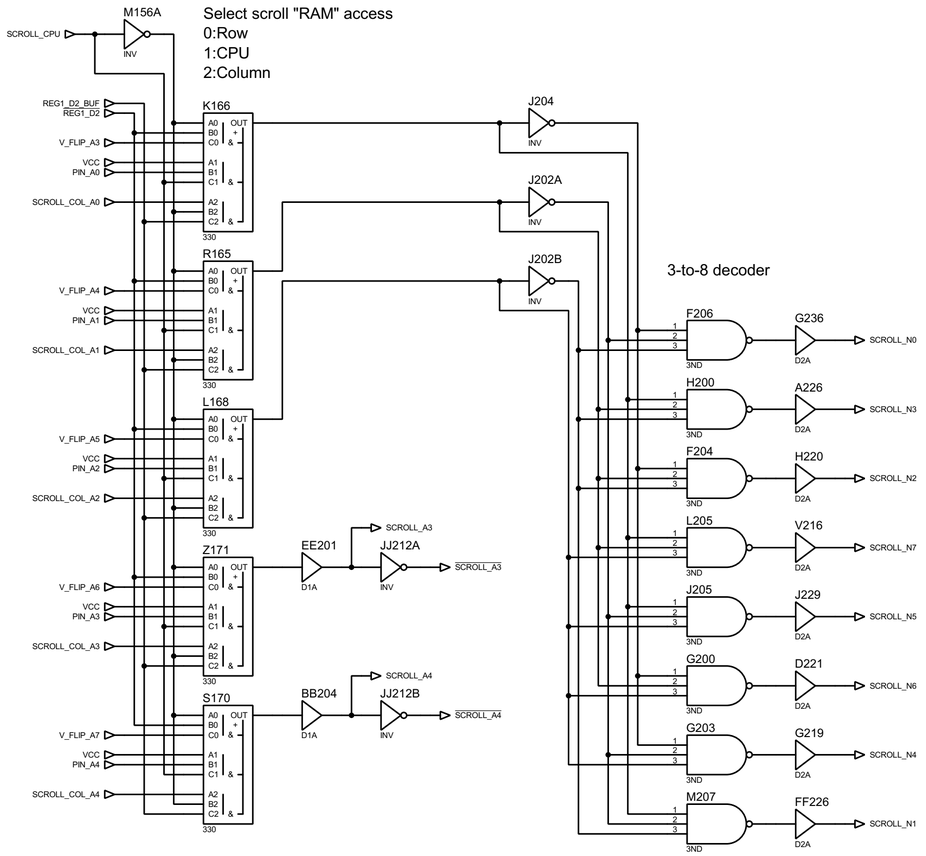

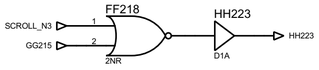

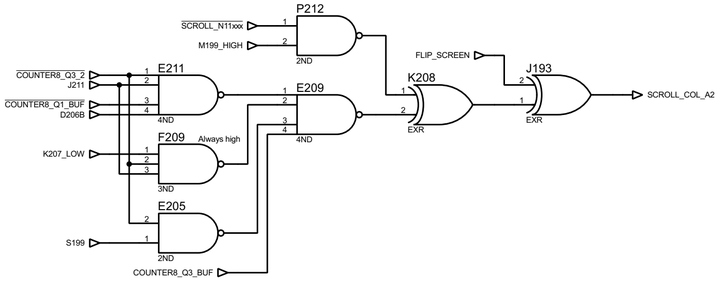

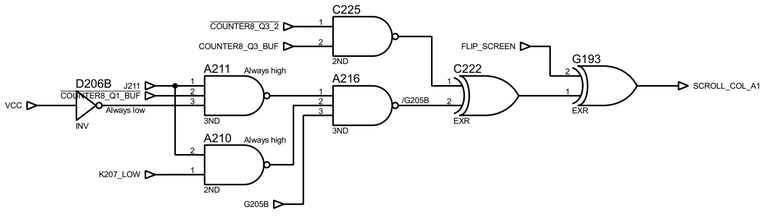

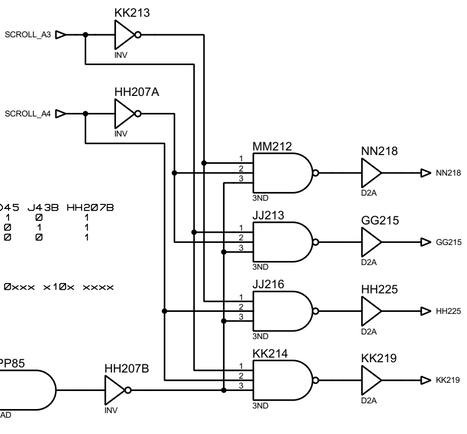

FILE NAME: 007121.pdsprj		DATE: 31/03/2021
DESIGN TITLE: Konami 007121 SCROLL RAM ADDRESS		PAGE: 24 of 52
BY: Sean Gonsalves	REV: 0	

SCROLL color bit 0 SR

Error: 3-to-8 decoder AA2A must be used

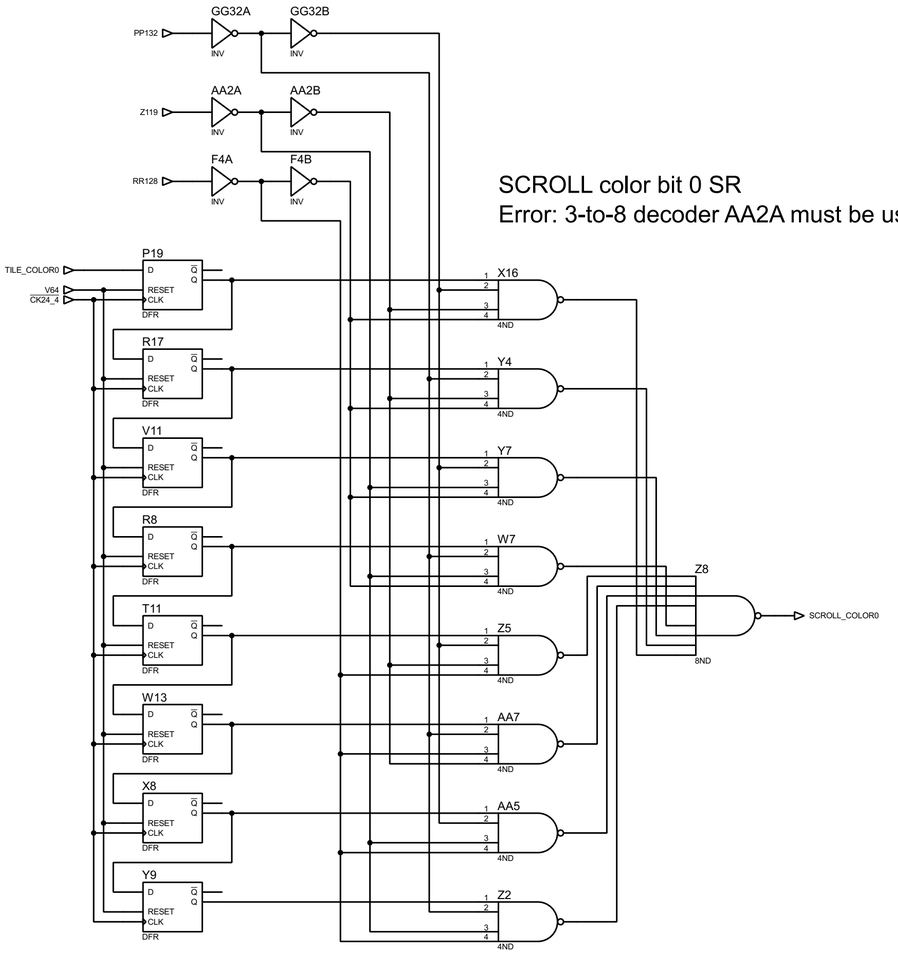

SCROLL color bit 3 SR

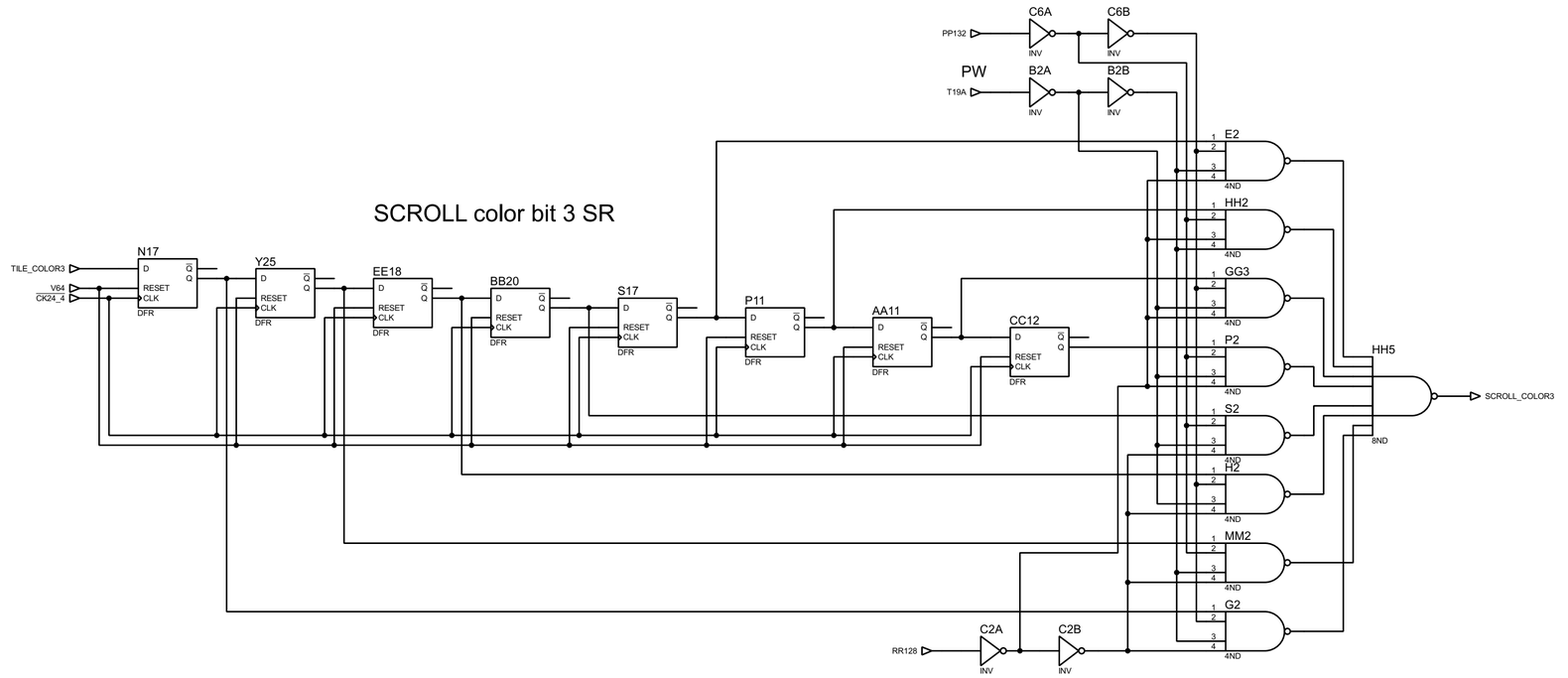

SCROLL color bit 2 SR

SCROLL color bit 1 SR

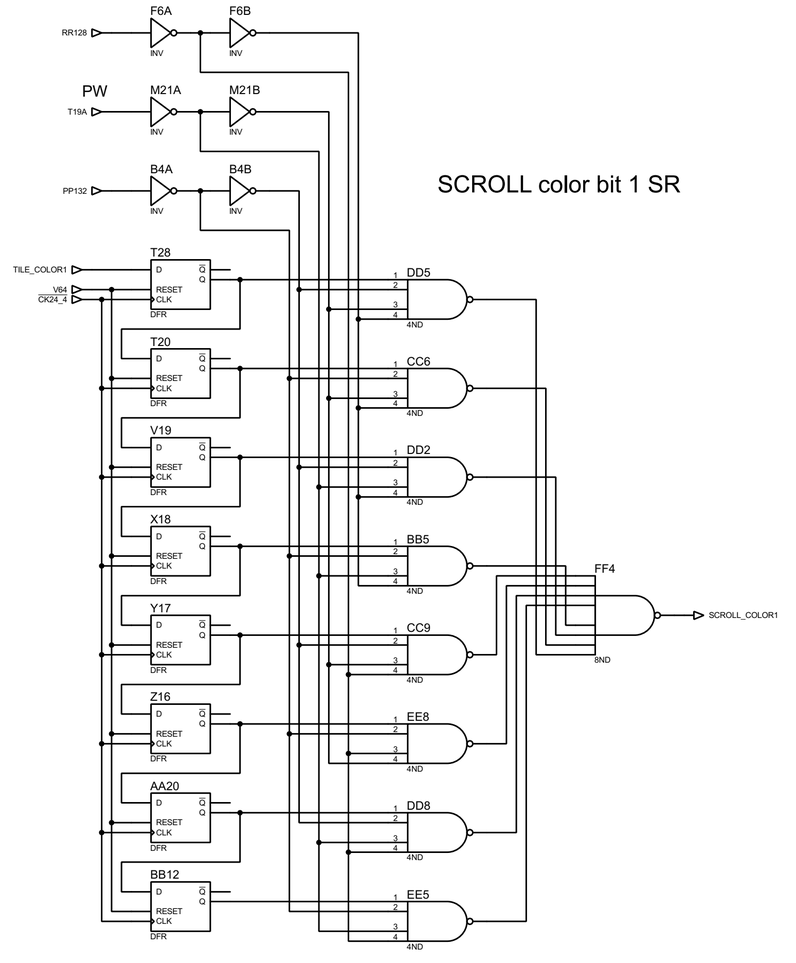

FILE NAME: 007121.pdsprj			DATE: 31/03/2021
DESIGN TITLE: Konami 007121 BG SHIFT REGS			PAGE: 25 of 52
BY: Sean Gonsalves	REV: 0		TIME: 06:44:38

SPR/SCROLL priority bit SR

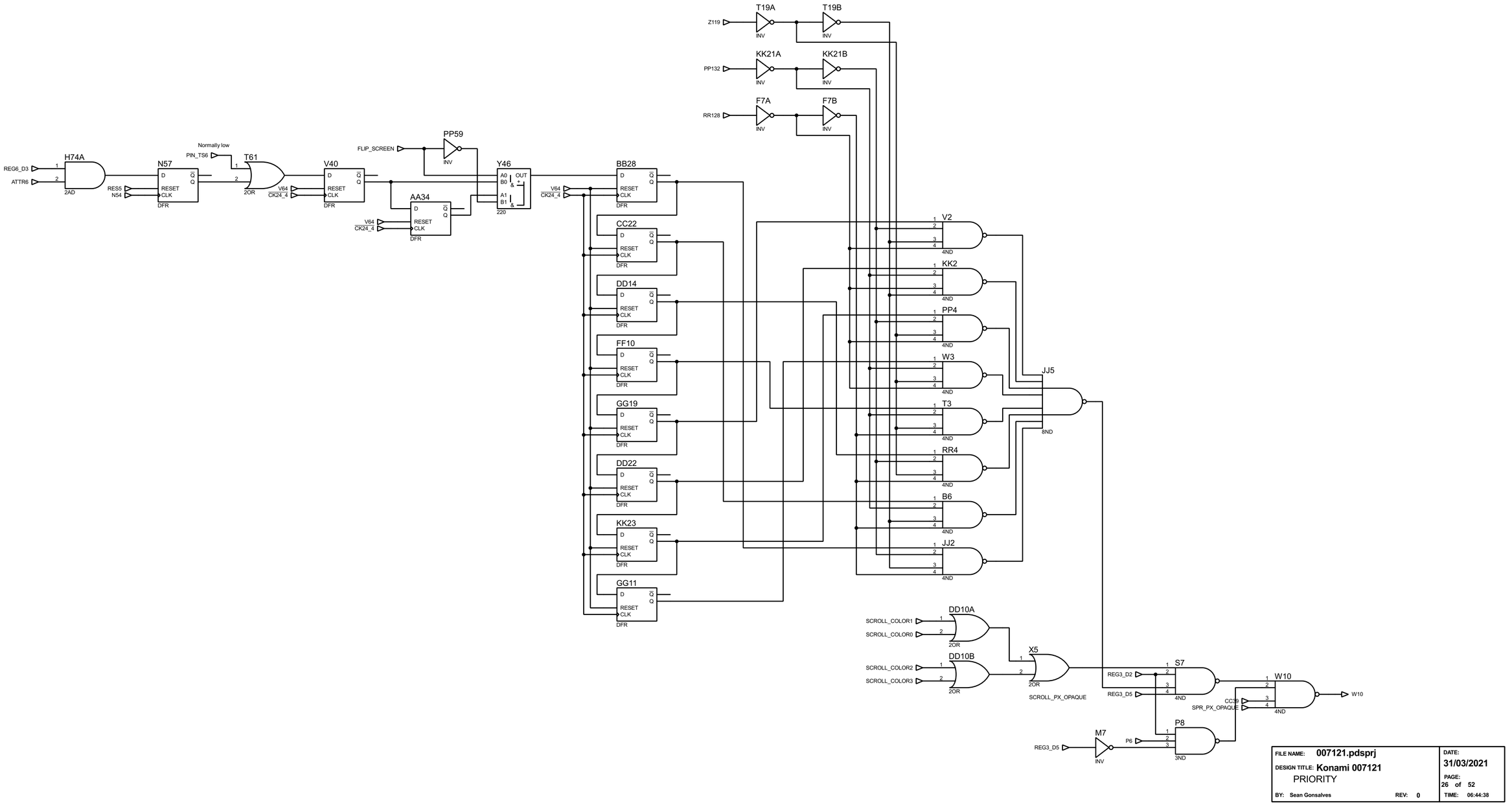

FILE NAME: 007121.pdsprj		DATE: 31/03/2021
DESIGN TITLE: Konami 007121 PRIORITY		PAGE: 26 of 52
BY: Sean Gonsalves	REV: 0	TIME: 06:44:38

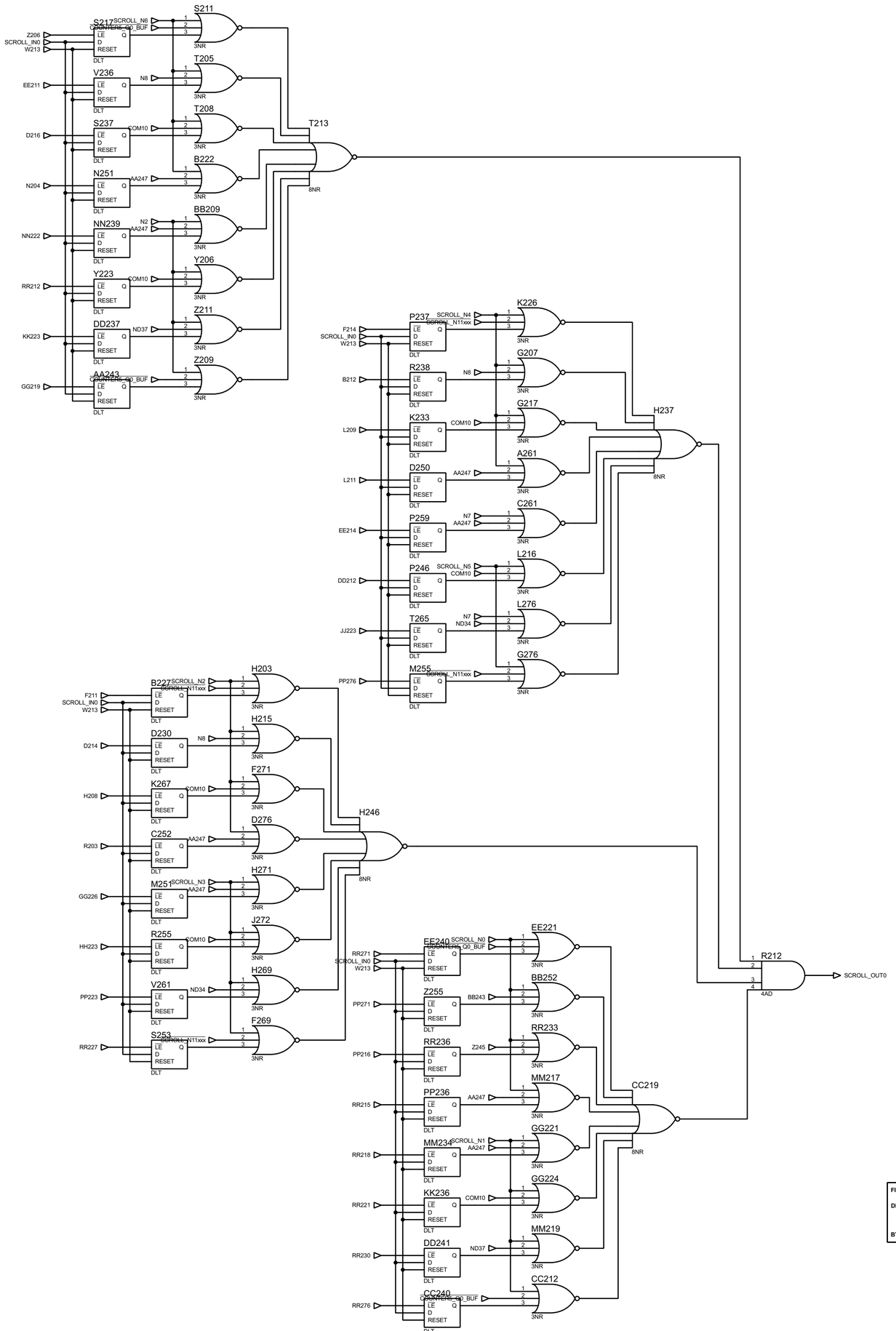

FILE NAME: 007121.pdsprj		DATE: 31/03/2021
DESIGN TITLE: Konami 007121 SCROLL BIT 0		PAGE: 27 of 52
BY: Sean Gonsalves	REV: 0	

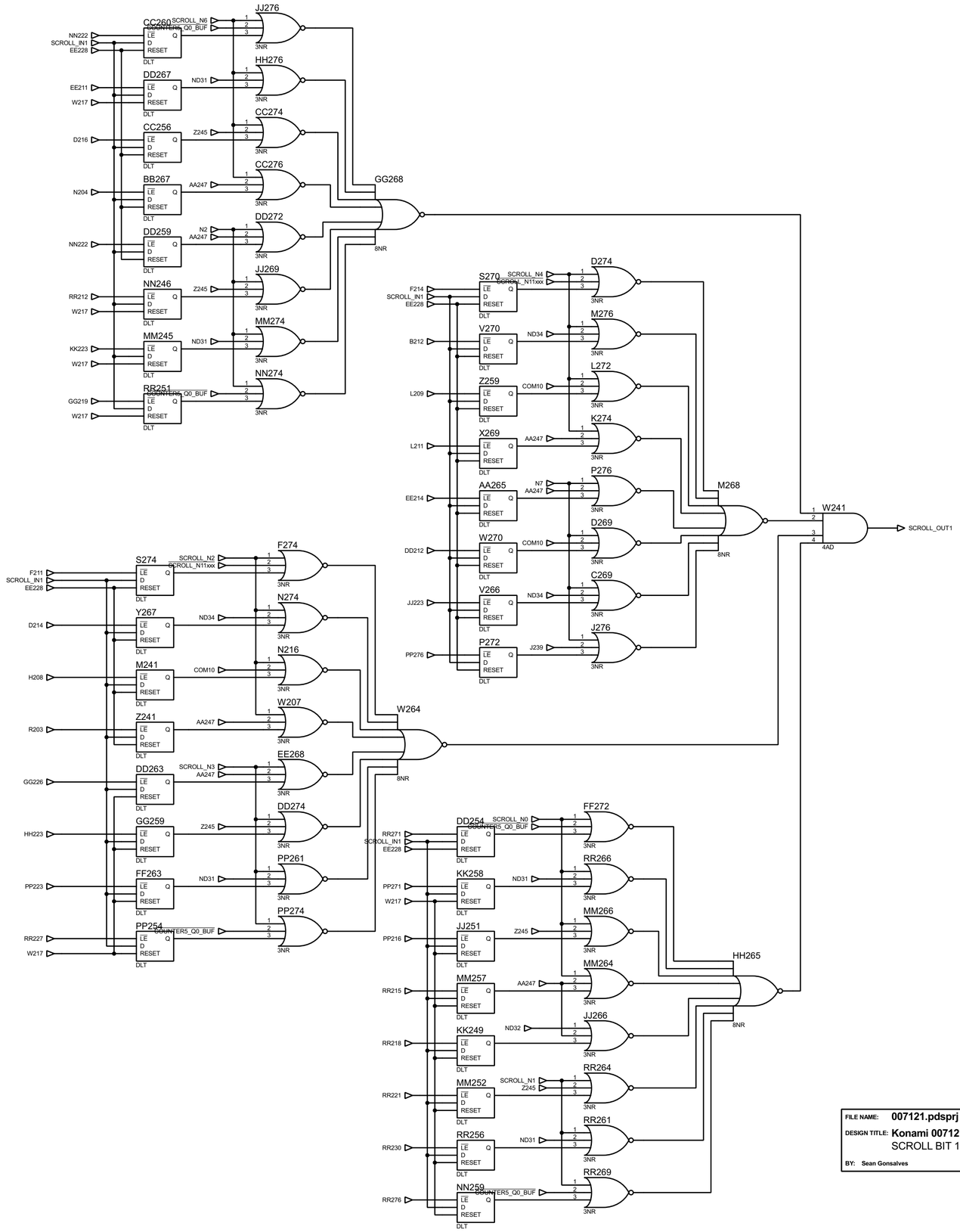

FILE NAME: 007121.pdsprj		DATE: 31/03/2021
DESIGN TITLE: Konami 007121 SCROLL BIT 1		PAGE: 28 of 52
BY: Sean Gonsalves	REV: 0	

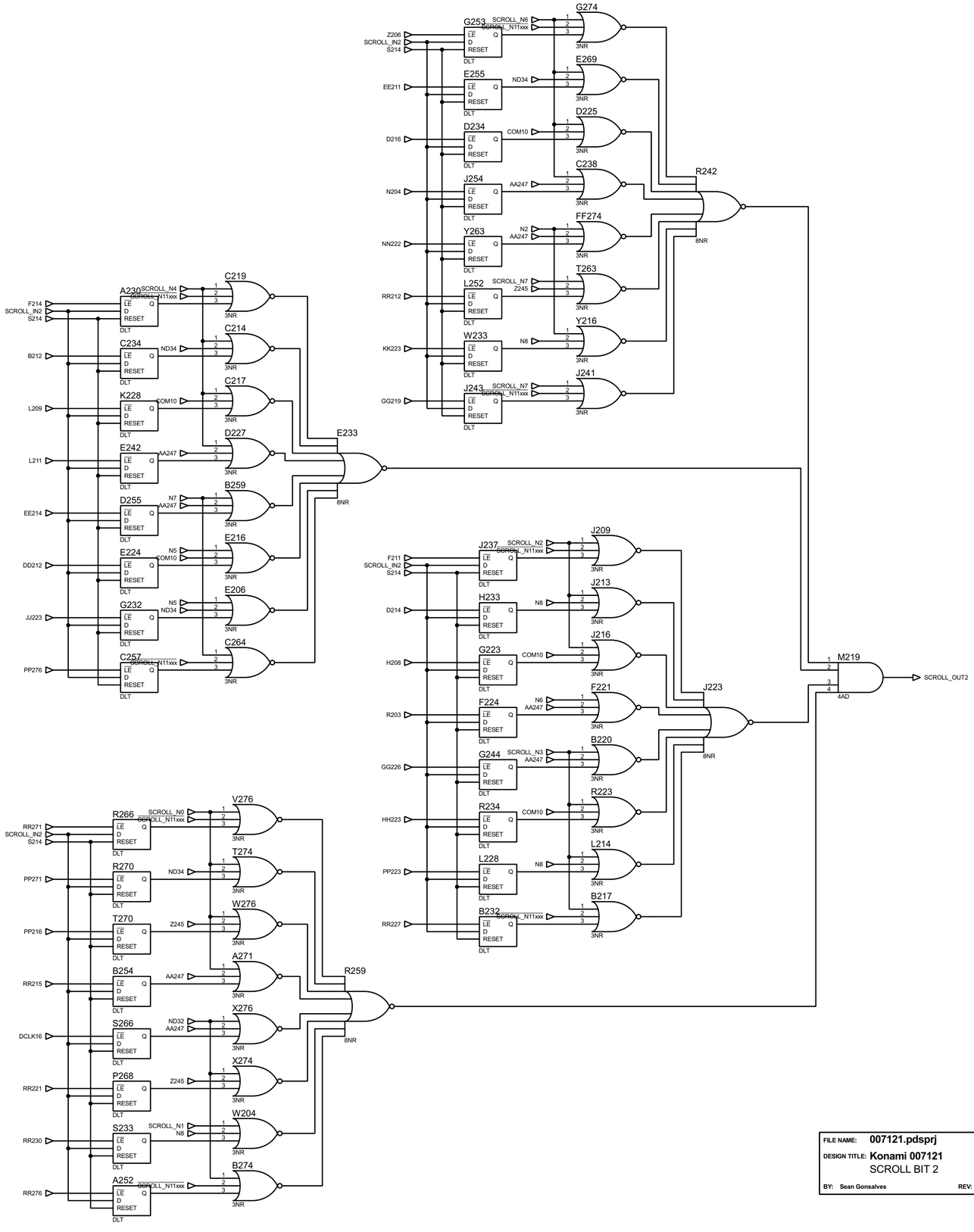

FILE NAME: 007121.pdsprj		DATE: 31/03/2021
DESIGN TITLE: Konami 007121 SCROLL BIT 2		PAGE: 29 of 52
BY: Sean Gonsalves	REV: 0	

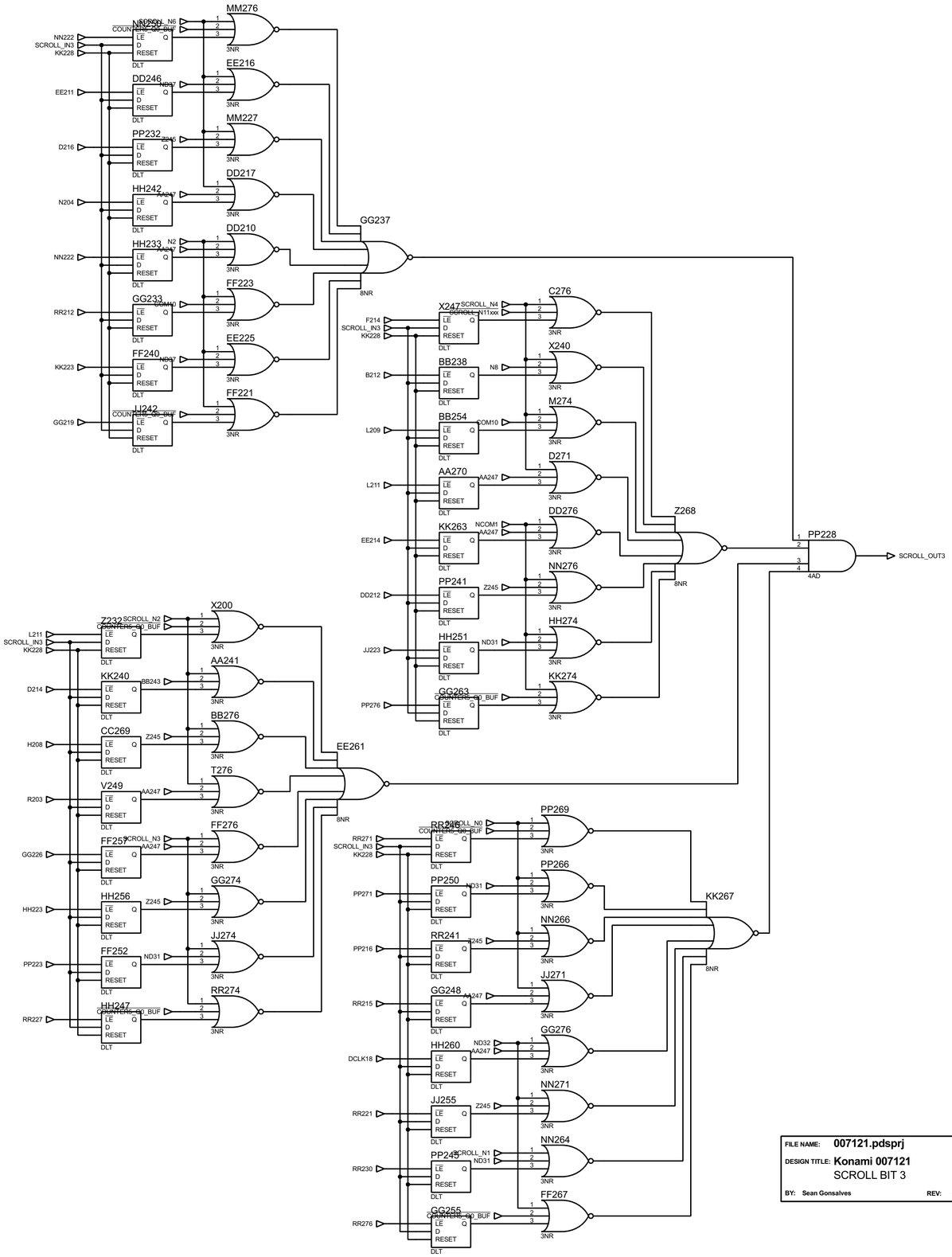

FILE NAME: **007121.pdsprj**		DATE: **31/03/2021**
DESIGN TITLE: **Konami 007121** SCROLL BIT 3		PAGE: **30 of 52**
BY: **Sean Gonsalves**	REV: **0**	

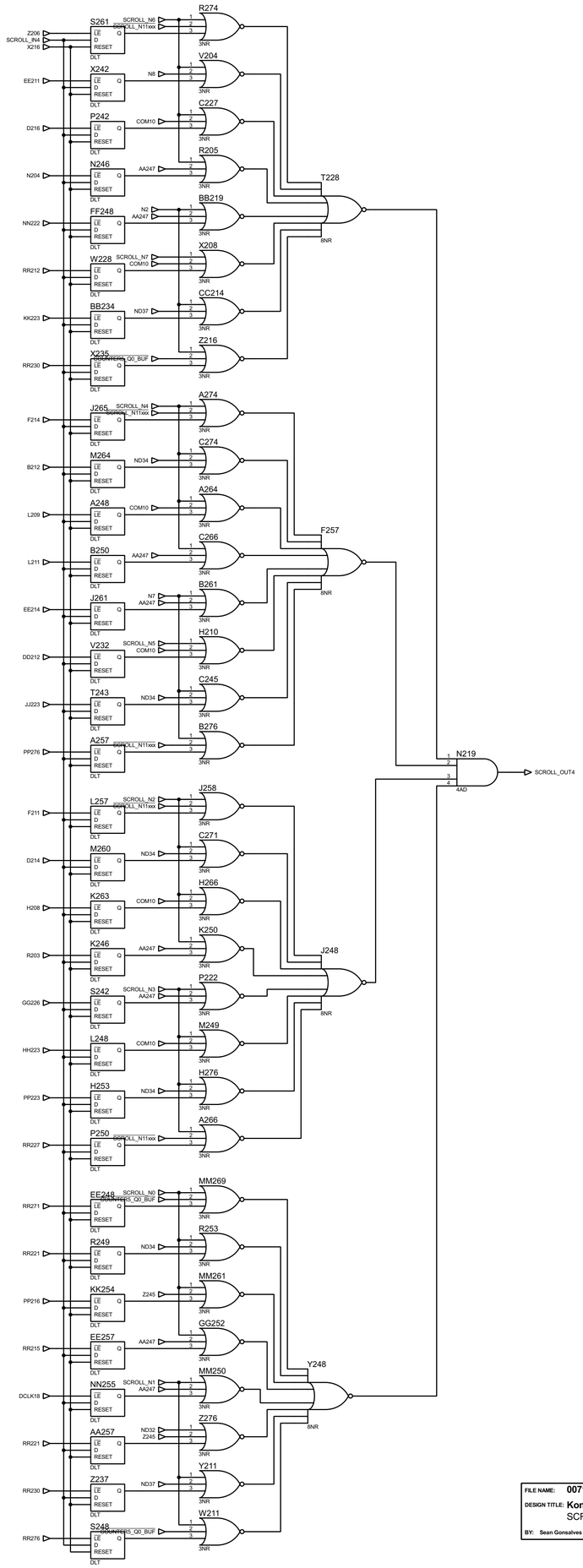

FILE NAME: **007121.pdsprj**	DATE: **31/03/2021**
DESIGN TITLE: **Konami 007121** SCROLL BIT 4	PAGE: **31 of 52**
BY: **Sean Gonsalves** REV: **0**	

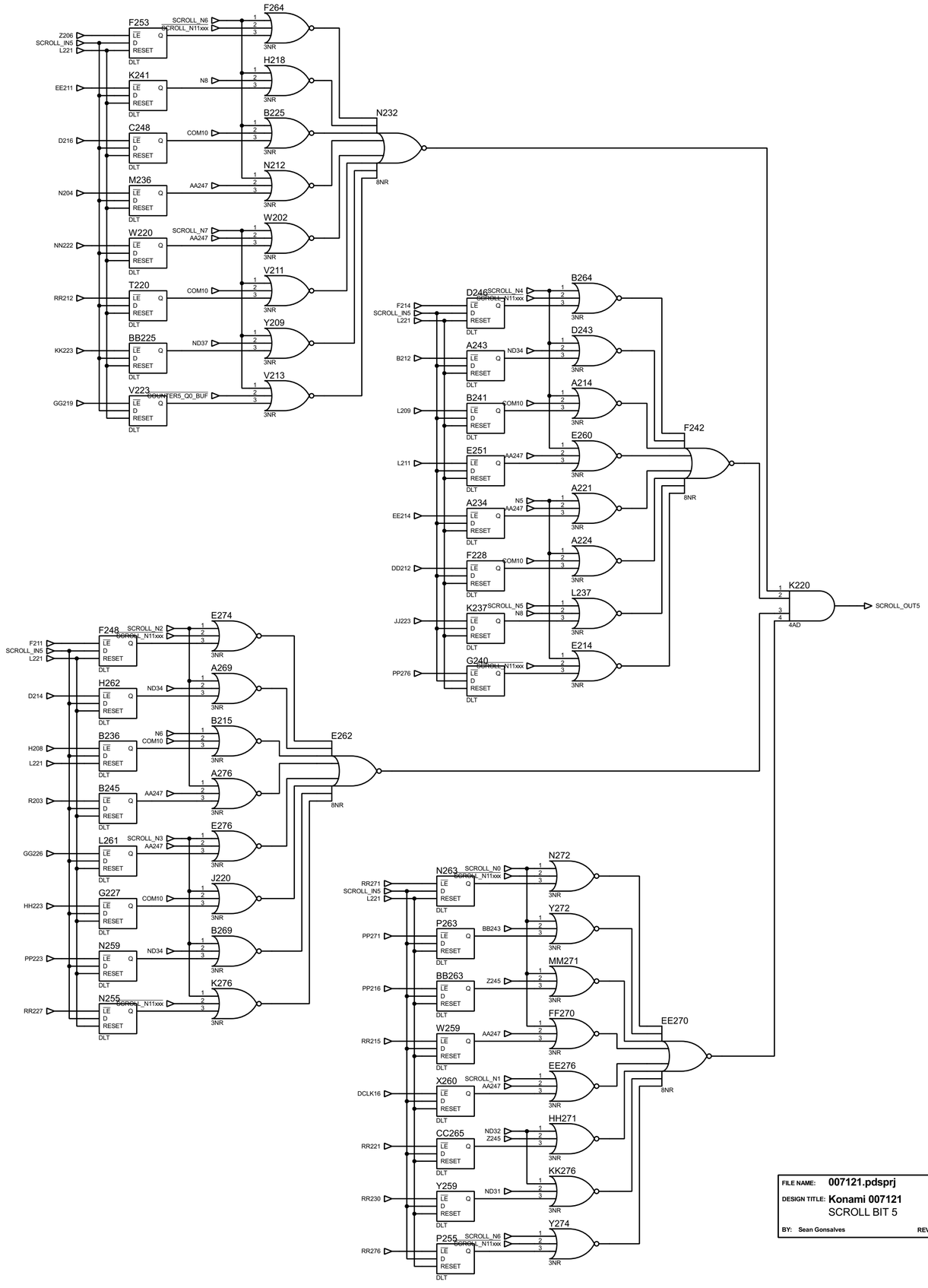

FILE NAME: **007121.pdsprj**		DATE: **31/03/2021**
DESIGN TITLE: **Konami 007121** SCROLL BIT 5		PAGE: **32 of 52**
BY: **Sean Gonsalves**	REV: **0**	

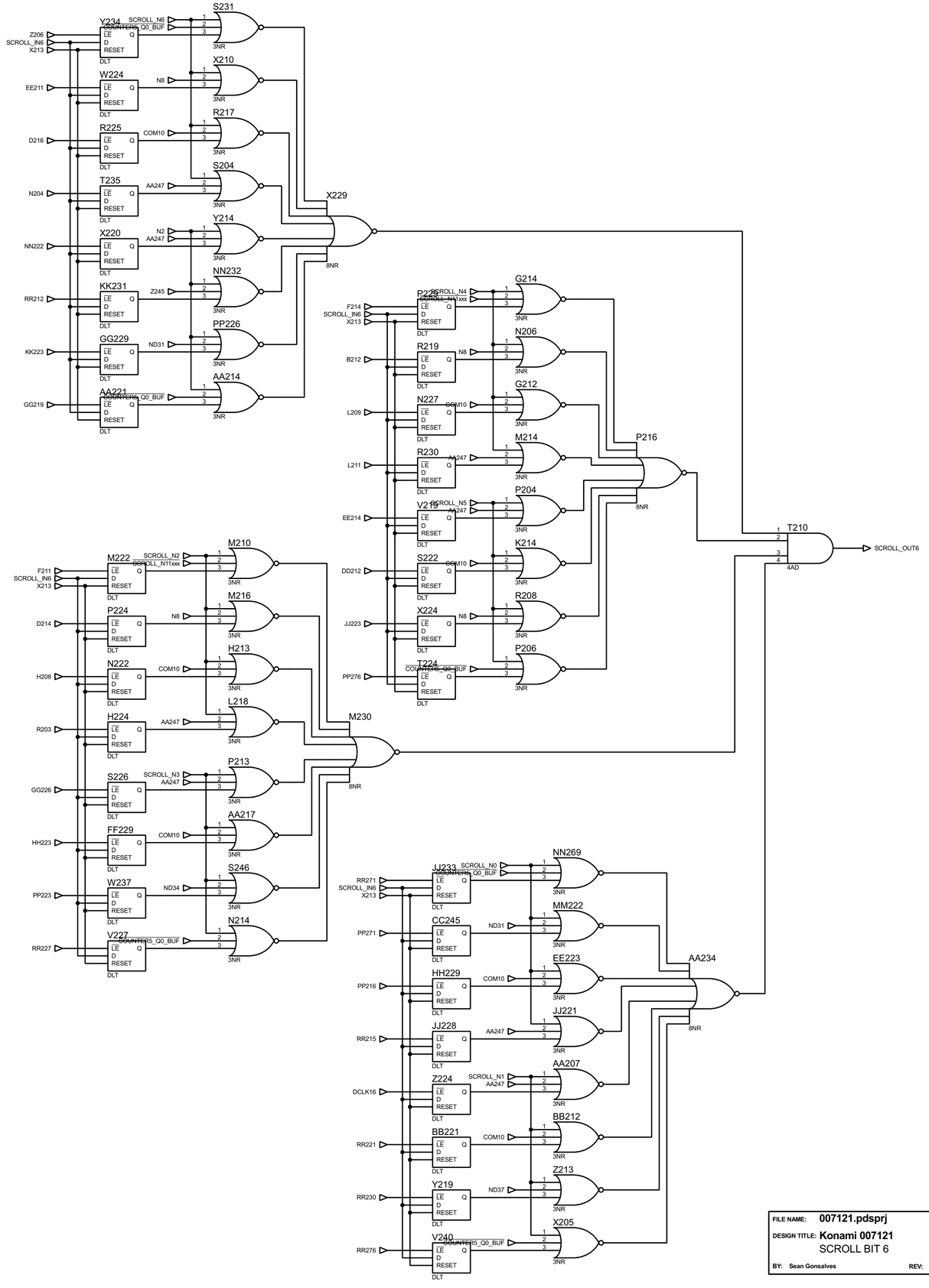

FILE NAME: 007121.pdsprj		DATE: 31/03/2021
DESIGN TITLE: Konami 007121 SCROLL BIT 6		PAGE: 33 of 52
BY: Sean Gonsalves	REV: 0	

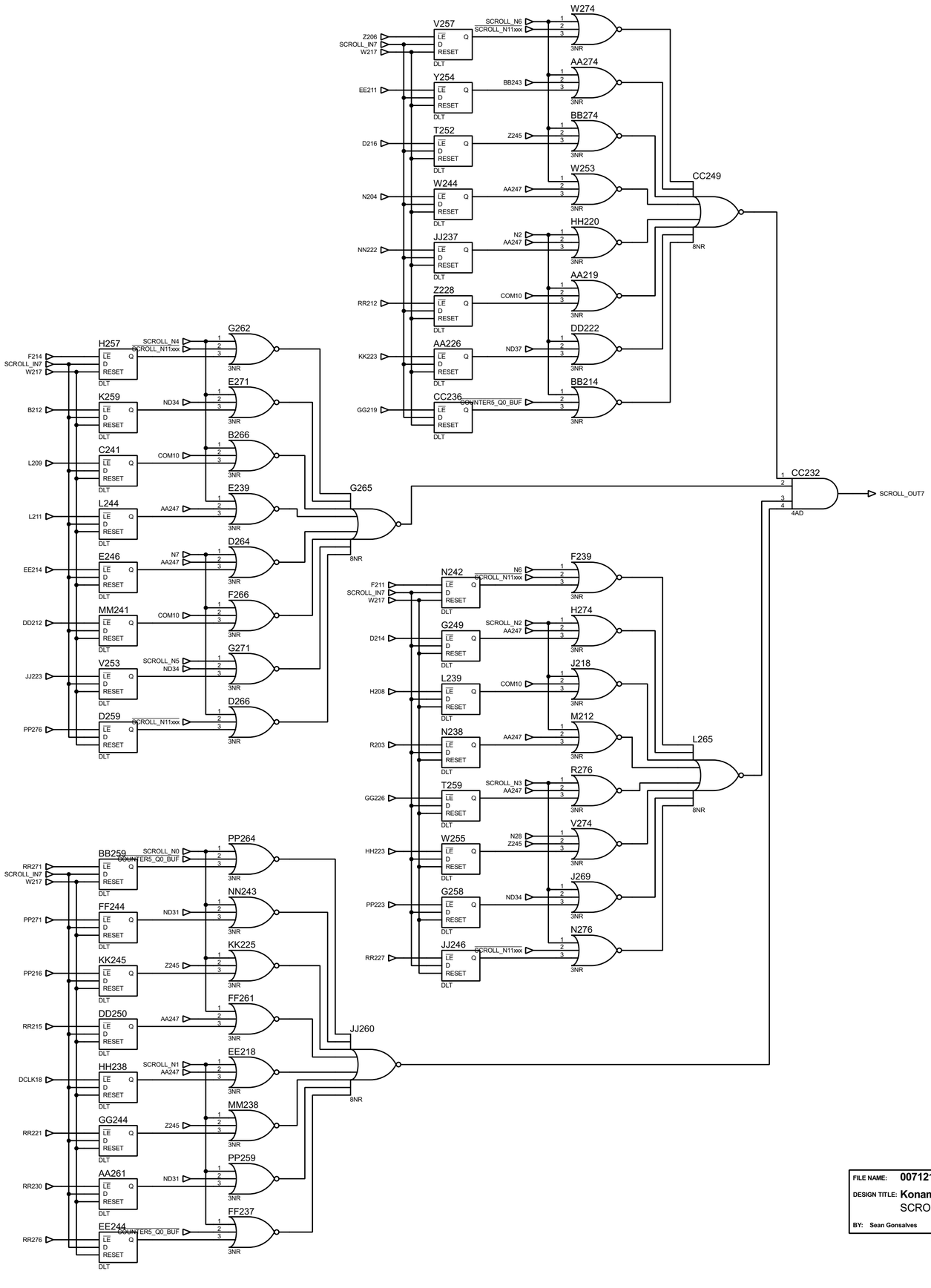

FILE NAME: 007121.pdsprj		DATE: 31/03/2021
DESIGN TITLE: Konami 007121 SCROLL BIT 7		PAGE: 34 of 52
BY: Sean Gonsalves	REV: 0	

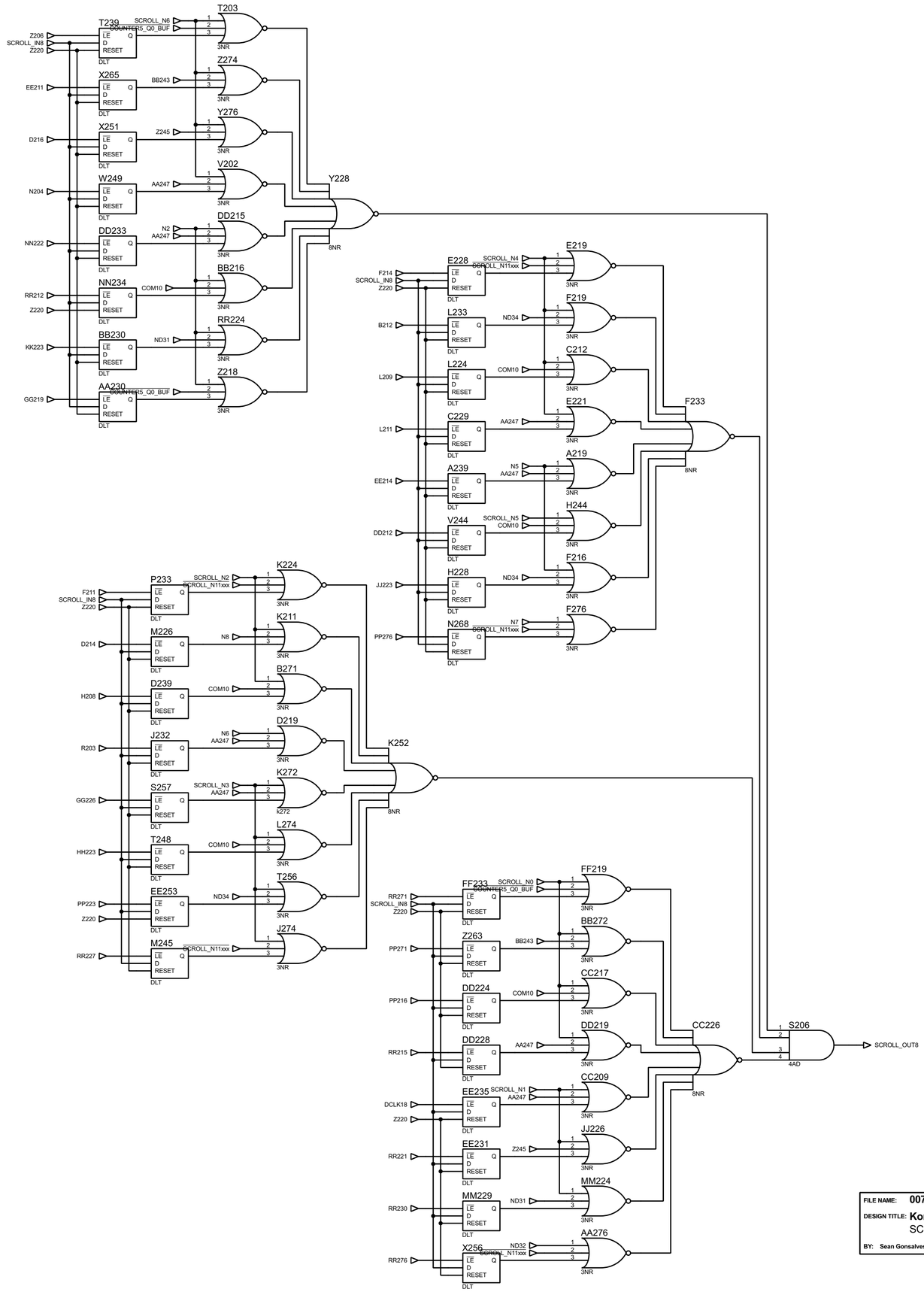
T239
SCROLL_N6
SCROLL_N11xxx
COUNTER5_Q0_BUF
Z206
SCROLL_IN8
Z220
DLT
T203
3NR
X265
BB243
EE211
Z274
X251
Z245
D216
Y276
W249
AA247
N204
V202
Y228
8NR
DD233
N2
AA247
NN222
DD215
BB216
NN234
COM10
RR212
Z220
RR224
BB230
ND31
KK223
Z218
AA230
GG219
E228
SCROLL_N4
F214
E219
L233
ND34
B212
F219
L224
C212
L209
C229
E221
L211
F233
A239
N5
A219
EE214
V244
H244
DD212
H228
F216
JJ223
N268
N7
F276
PP276
P233
K224
F211
M226
K211
D214
D239
B271
H208
J232
D219
N8
R203
K252
S257
K272
GG226
k272
T248
L274
HH223
EE253
T256
PP223
M245
J274
RR227
FF233
FF219
RR271
Z263
BB272
PP271
DD224
CC217
PP216
DD228
DD219
CC226
RR215
S206
SCROLL_OUT8
4AD
EE235
CC209
DCLK18
EE231
JJ226
RR221
MM229
MM224
RR230
X256
AA276
RR276
FILE NAME: 007121.pdsprj
DESIGN TITLE: Konami 007121
SCROLL BIT 8
BY: Sean Gonsalves
REV: 0
DATE: 31/03/2021
PAGE: 35 of 52

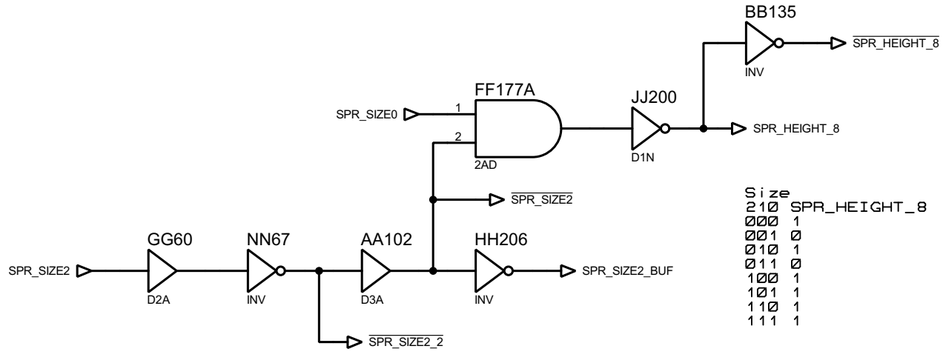

Size	210	SPR_HEIGHT_8
000	1	
001	0	
010	1	
011	0	
100	1	
101	1	
110	1	
111	1	

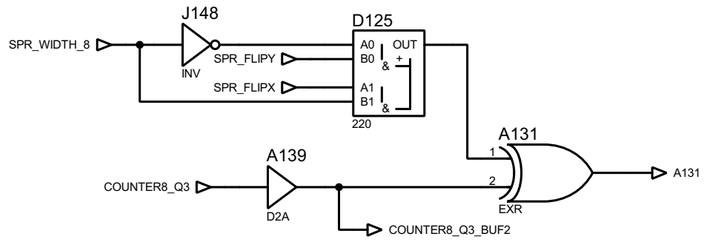

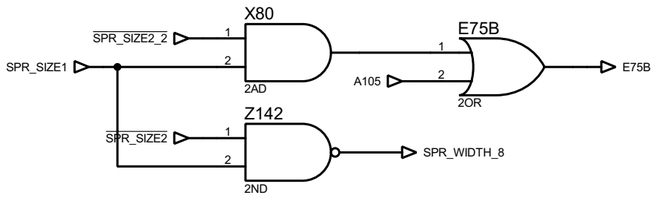

Size	210	Z142	X80
000	1		0
001	1		0
010	0		1
011	0		1
100	1		0
101	1		0
110	1		0
111	1		0

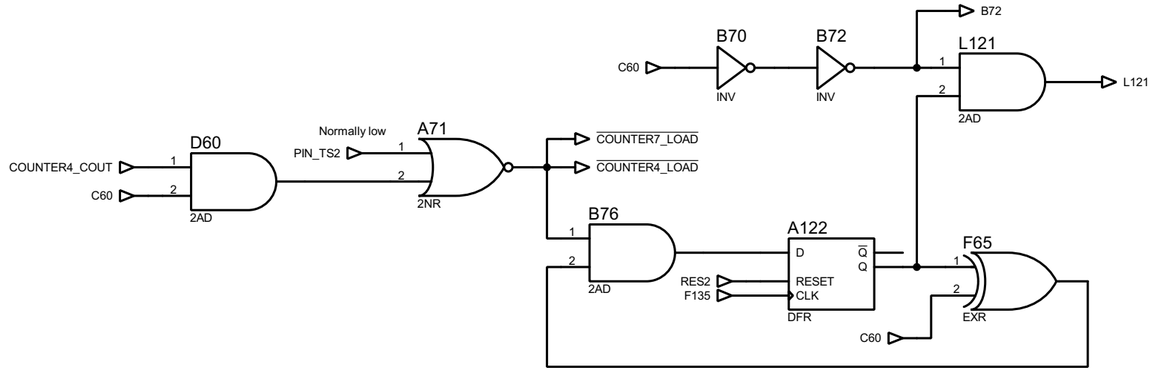

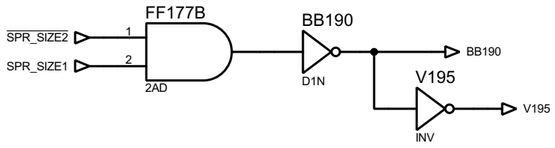

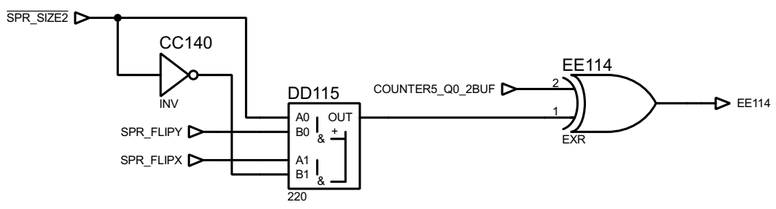

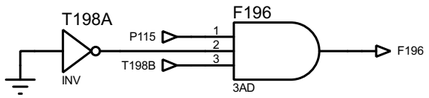

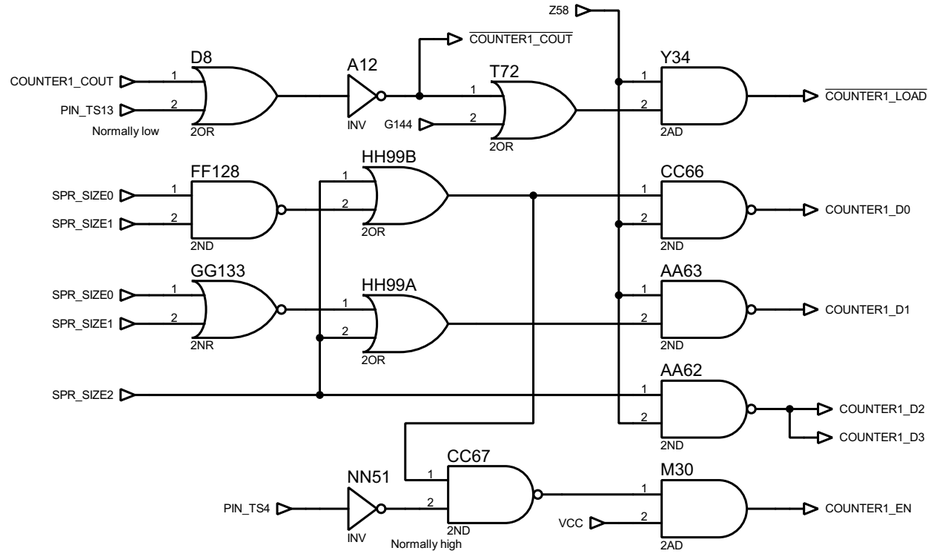

Size	210	H99B	H99A
000	1		1
001	1		0
010	1		0
011	0		0
100	1		1
101	1		1
110	1		1
111	1		1

FILE NAME: **007121.pdsprj**		DATE: **31/03/2021**
DESIGN TITLE: **Konami 007121** SPR SIZE		PAGE: **36 of 52**
BY: **Sean Gonsalves**	REV: **0**	TIME: **06:44:38**

Select between CPU, SPR, CPU, BG

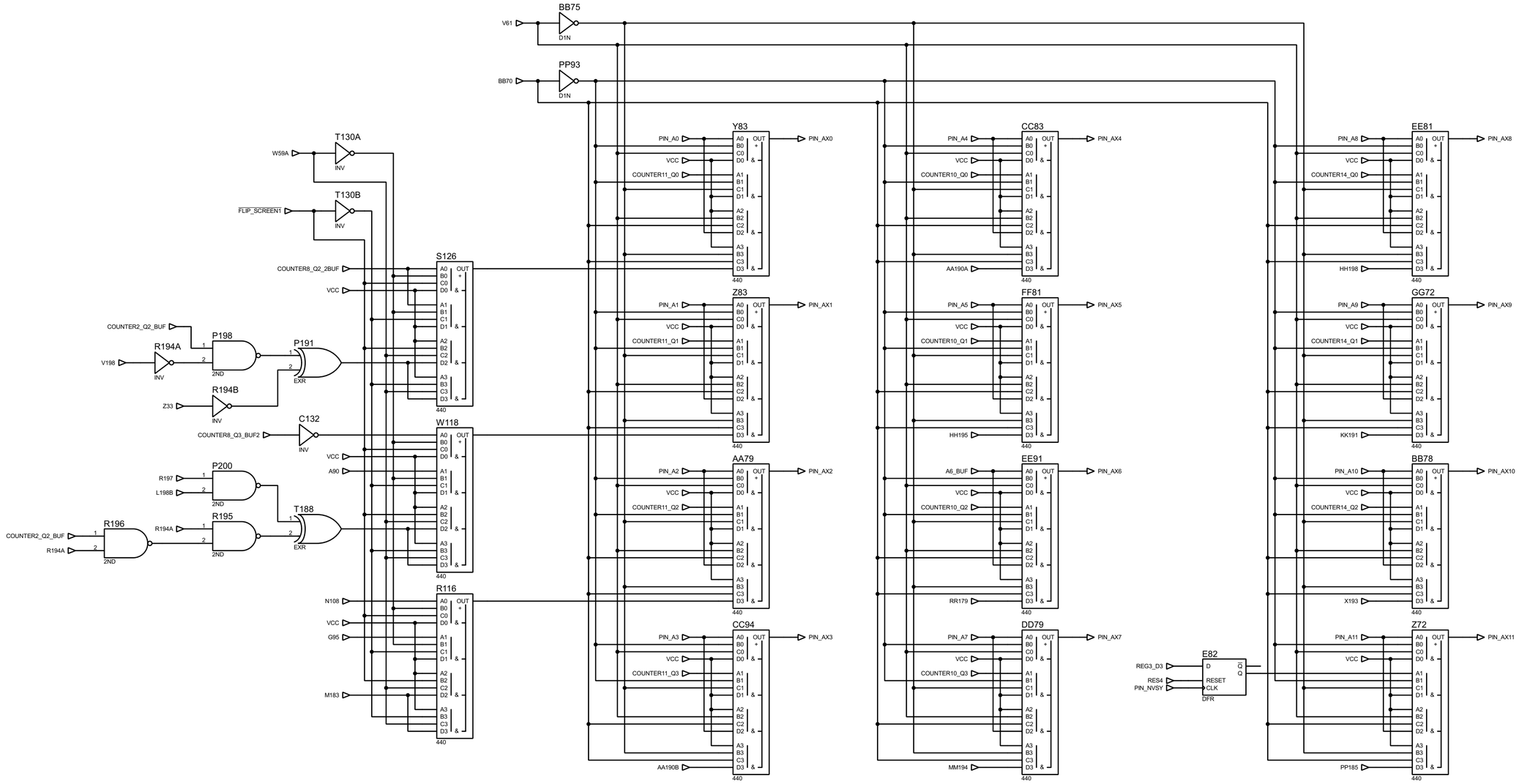

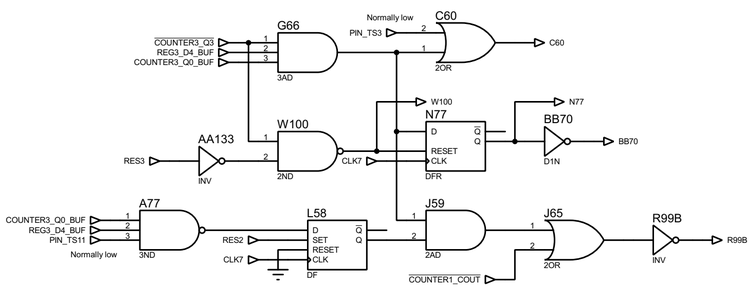

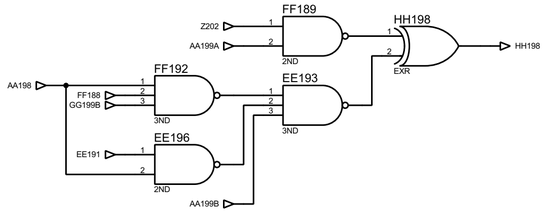

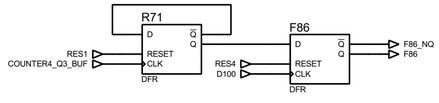

FILE NAME: 007121.pdsprj	DATE: 31/03/2021
DESIGN TITLE: Konami 007121 SRAM ADDRESS	PAGE: 37 of 52
BY: Sean Gonsalves REV: 0	

V counter low

V counter high

H counter low

H counter high

Related to SPR X

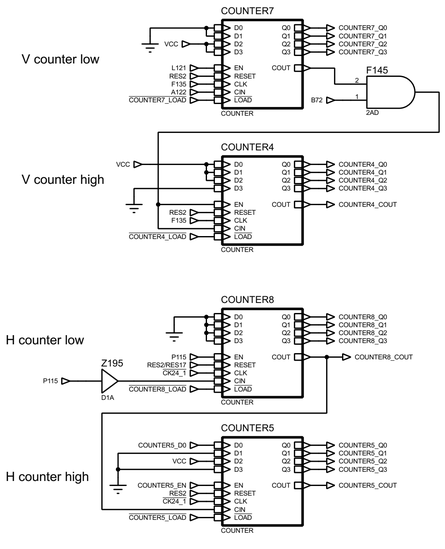

FILE NAME:	007121.pdsprj
DESIGN TITLE:	Konami 007121
	COUNTERS
BY:	Sean Gonsalves
REV:	0
DATE:	31/03/2021
PAGE:	38 of 52
TIME:	06:44:38

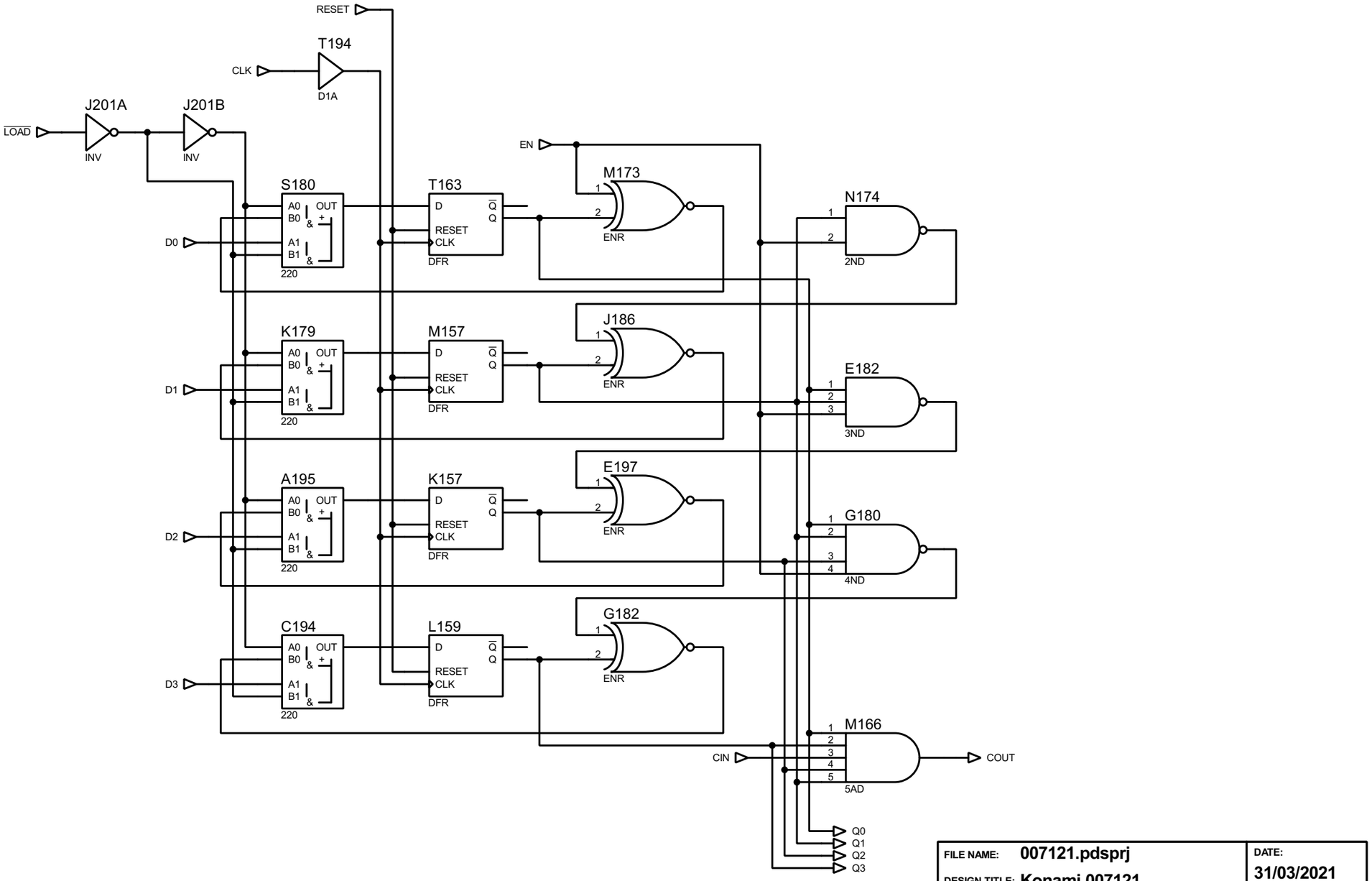

FILE NAME: 007121.pdsprj	DATE: 31/03/2021
DESIGN TITLE: Konami 007121	PAGE: 39 of 52
BY: Sean Gonsalves REV: 0	TIME: 06:44:38

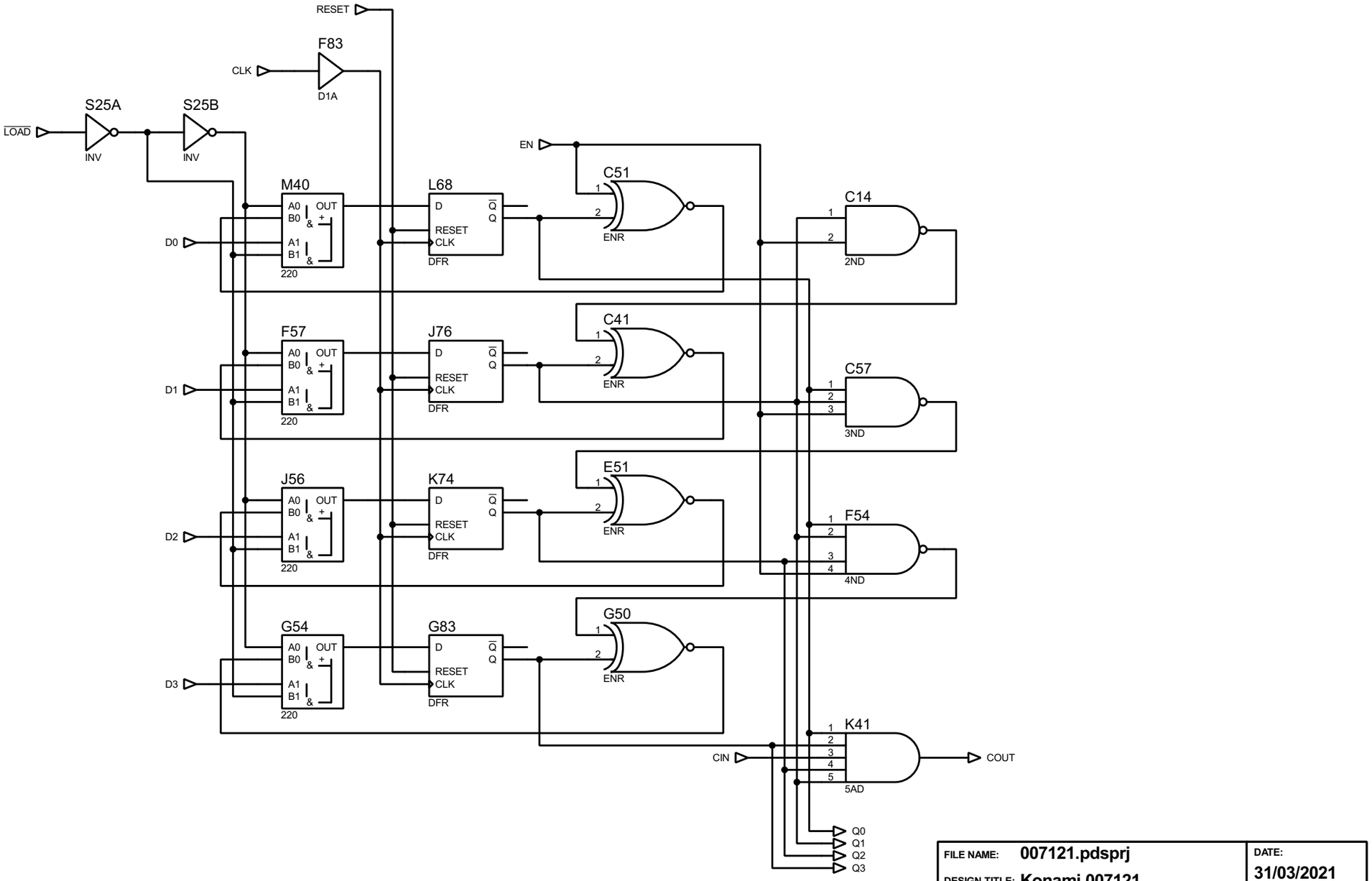

FILE NAME: 007121.pdsprj		DATE: 31/03/2021
DESIGN TITLE: Konami 007121		PAGE: 40 of 52
BY: Sean Gonsalves	REV: 0	TIME: 06:44:38

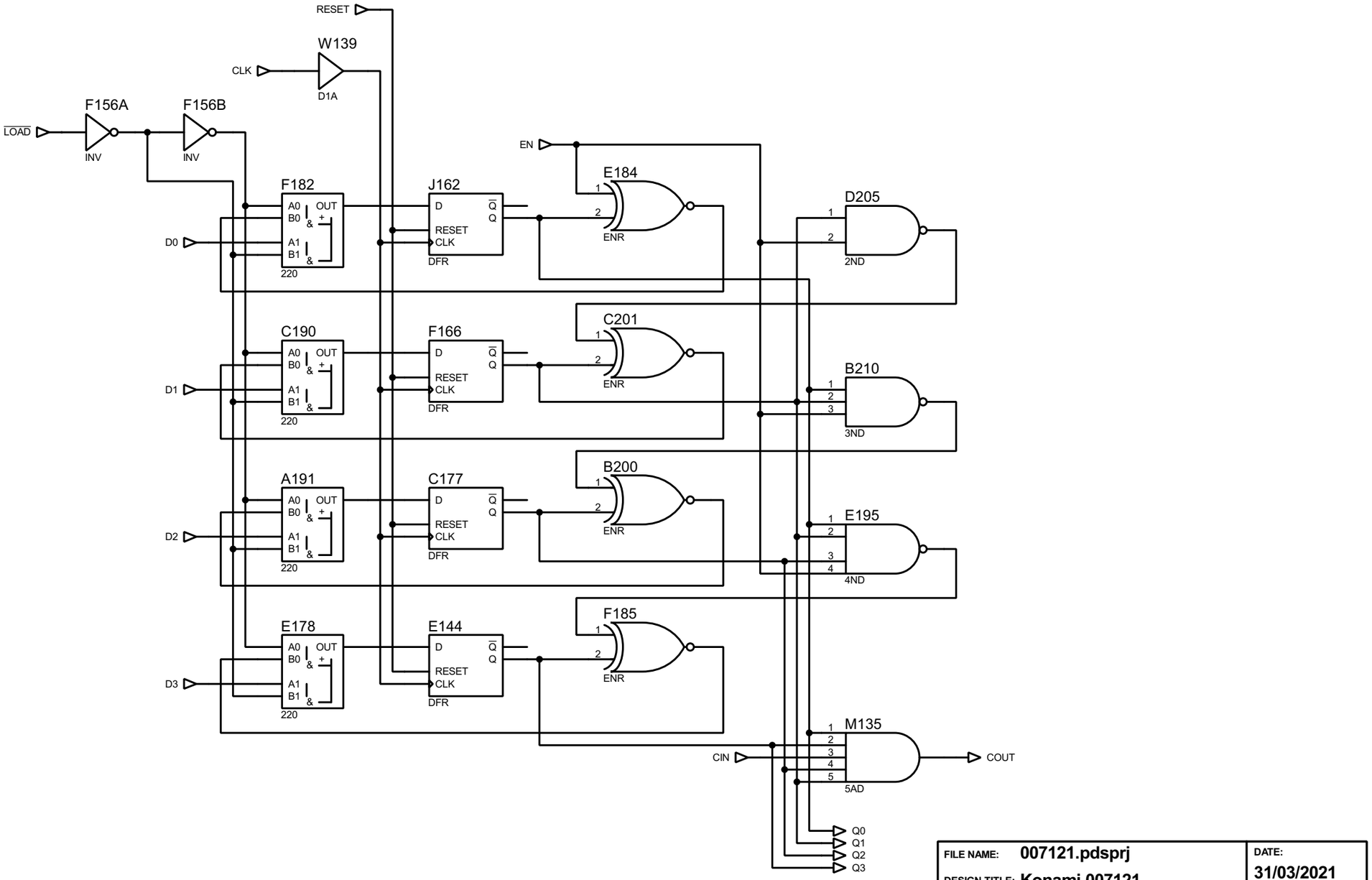

FILE NAME:	007121.pdsprj		DATE: 31/03/2021
DESIGN TITLE:	Konami 007121		PAGE: 41 of 52
BY: Sean Gonsalves		REV: 0	TIME: 06:44:38

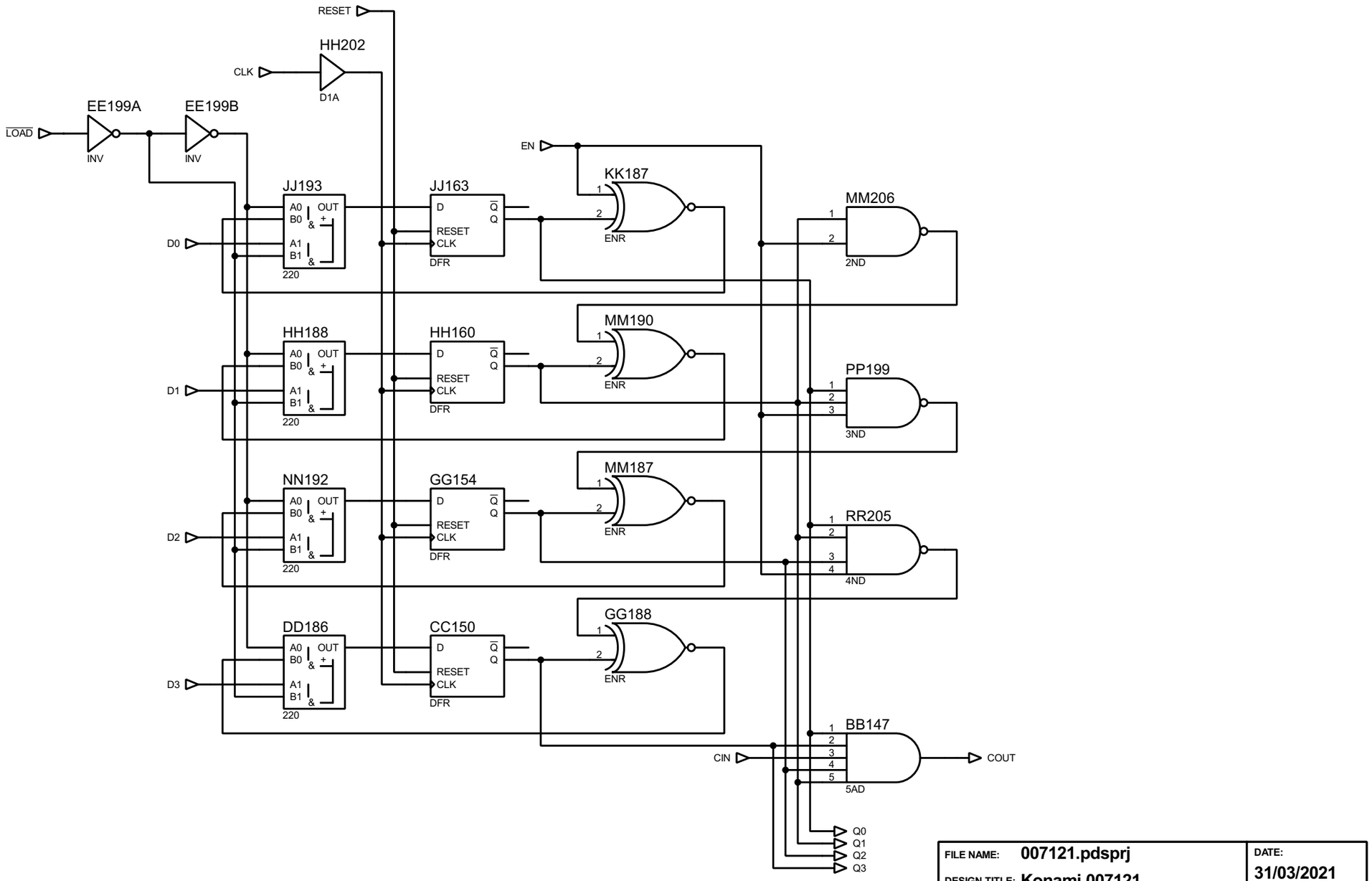

FILE NAME:	007121.pdsprj	DATE:	31/03/2021
DESIGN TITLE:	Konami 007121	PAGE:	42 of 52
BY:	Sean Gonsalves	REV:	0
		TIME:	06:44:38

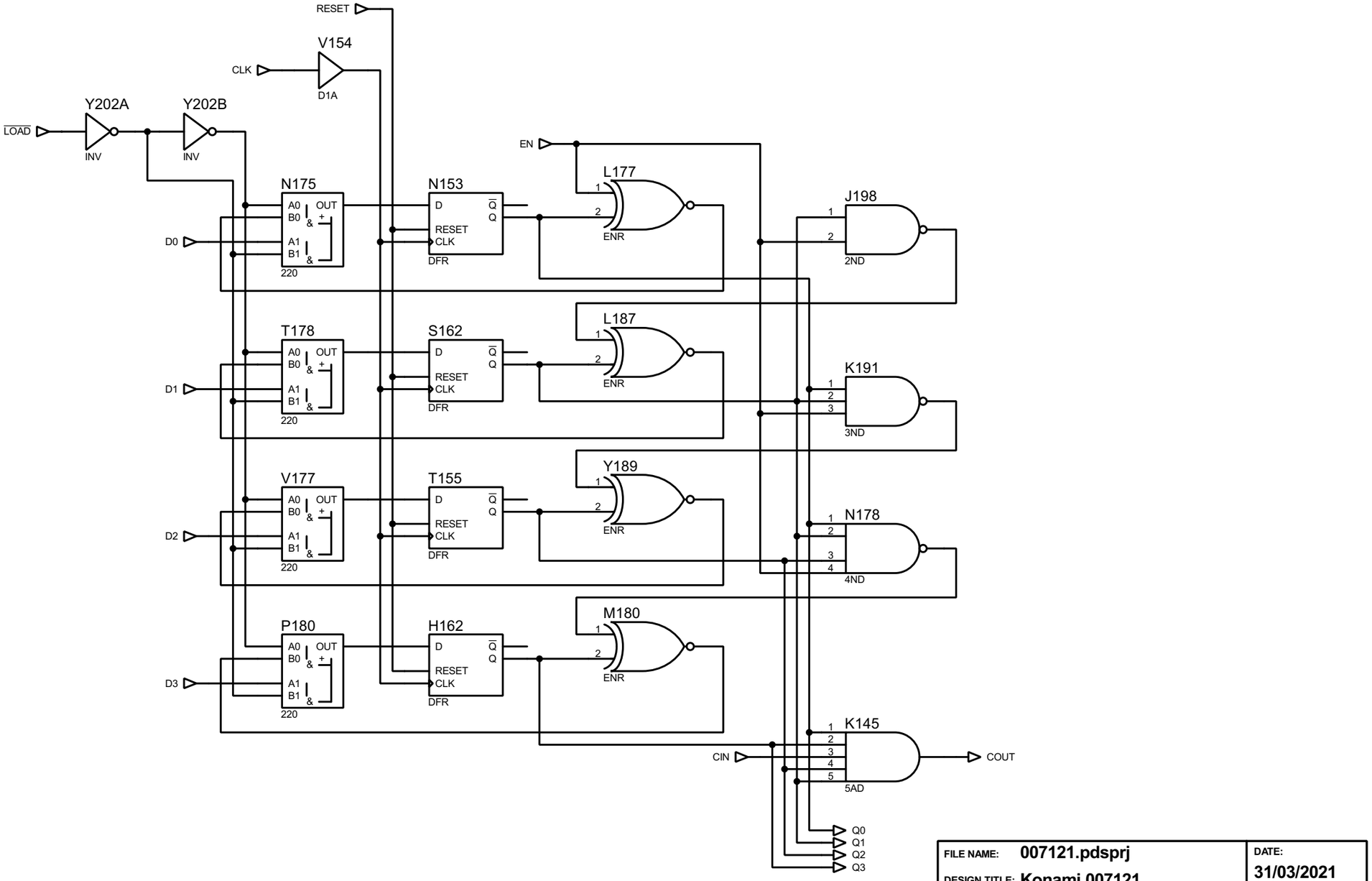

FILE NAME: 007121.pdsprj	DATE: 31/03/2021
DESIGN TITLE: Konami 007121	PAGE: 43 of 52
BY: Sean Gonsalves REV: 0	TIME: 06:44:38

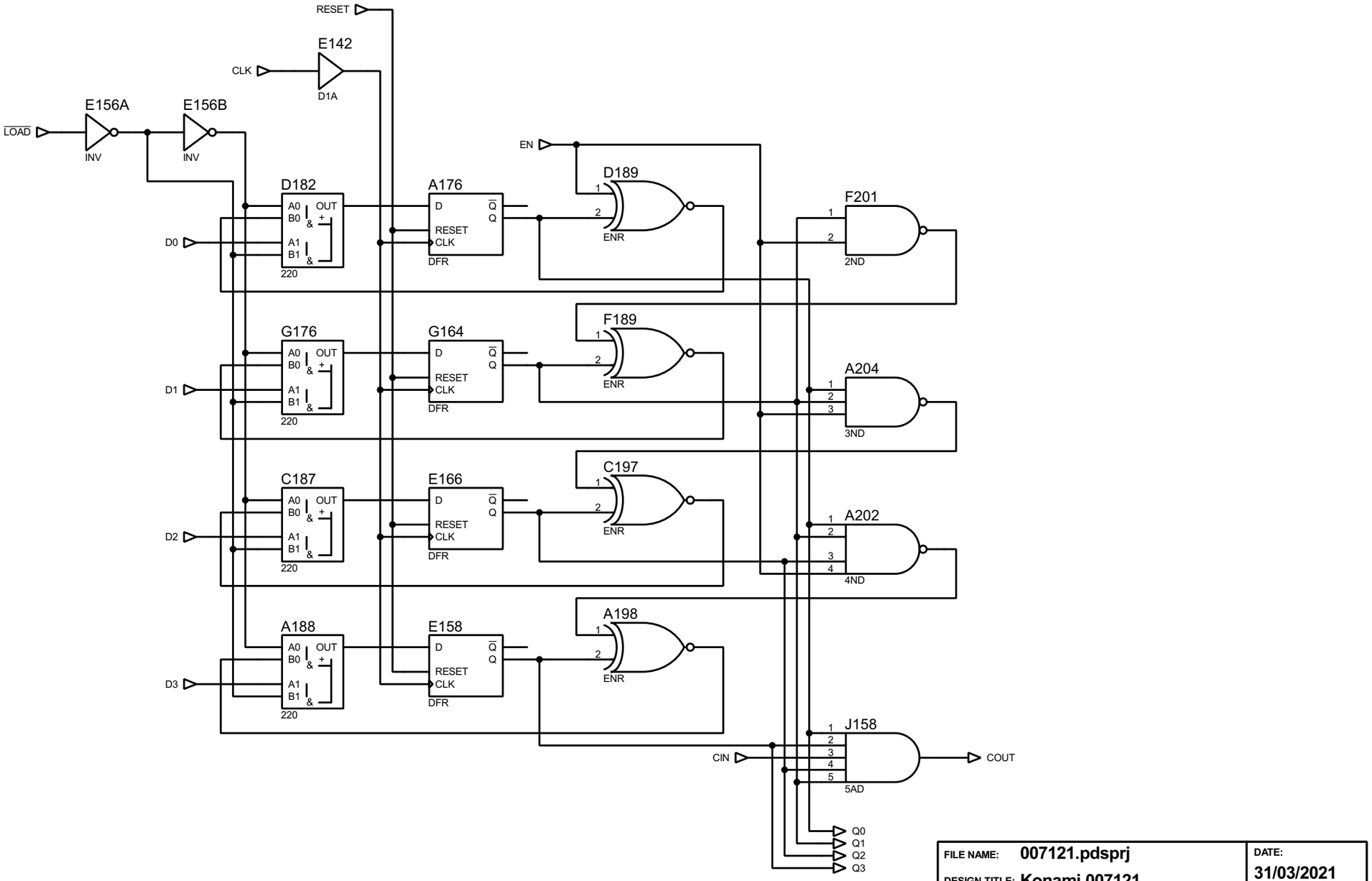

FILE NAME: 007121.pdsprj		DATE: 31/03/2021
DESIGN TITLE: Konami 007121		PAGE: 44 of 52
BY: Sean Gonsalves	REV: 0	TIME: 06:44:38

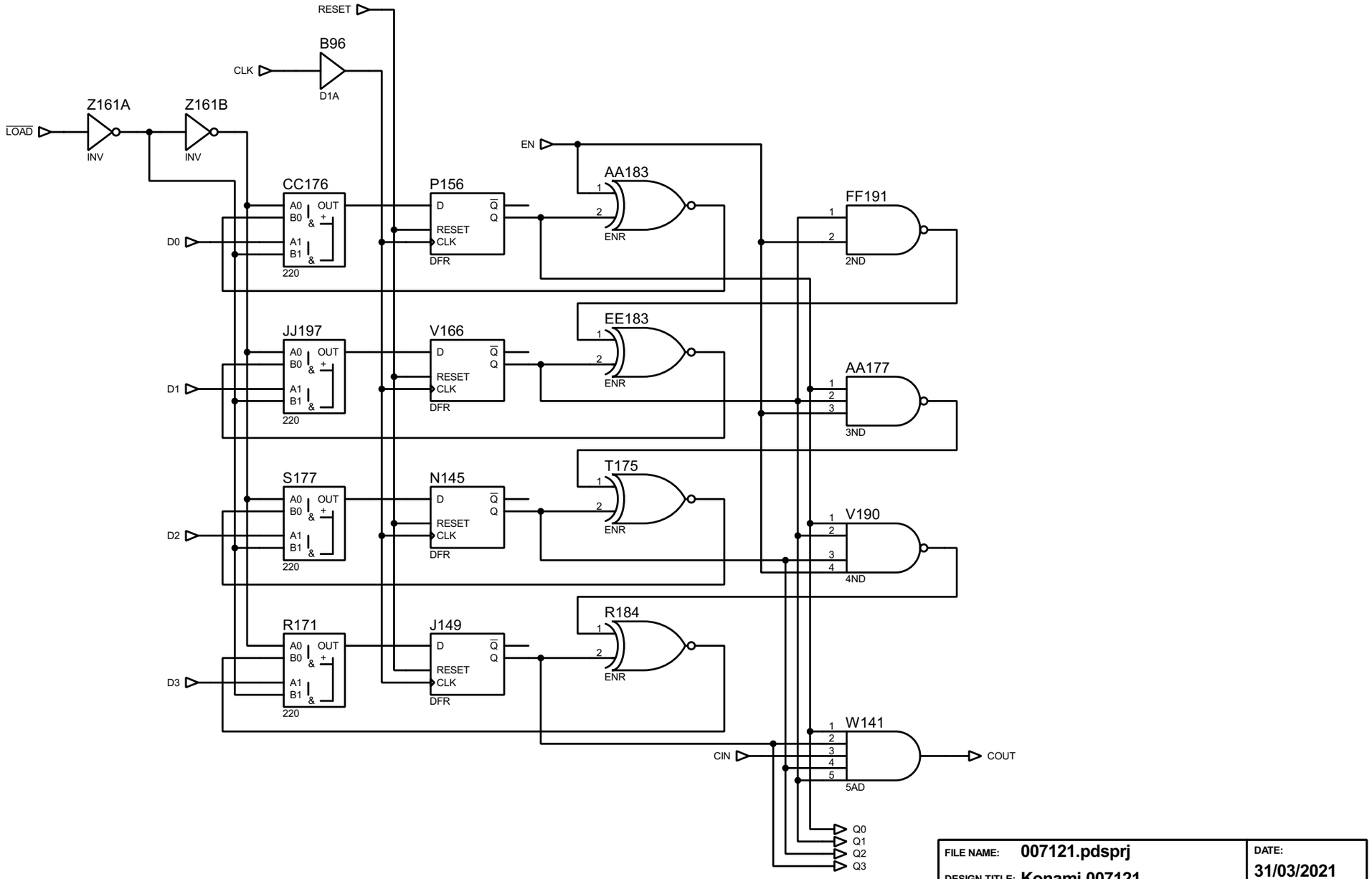

FILE NAME: 007121.pdsprj		DATE: 31/03/2021
DESIGN TITLE: Konami 007121		PAGE: 45 of 52
BY: Sean Gonsalves	REV: 0	TIME: 06:44:38

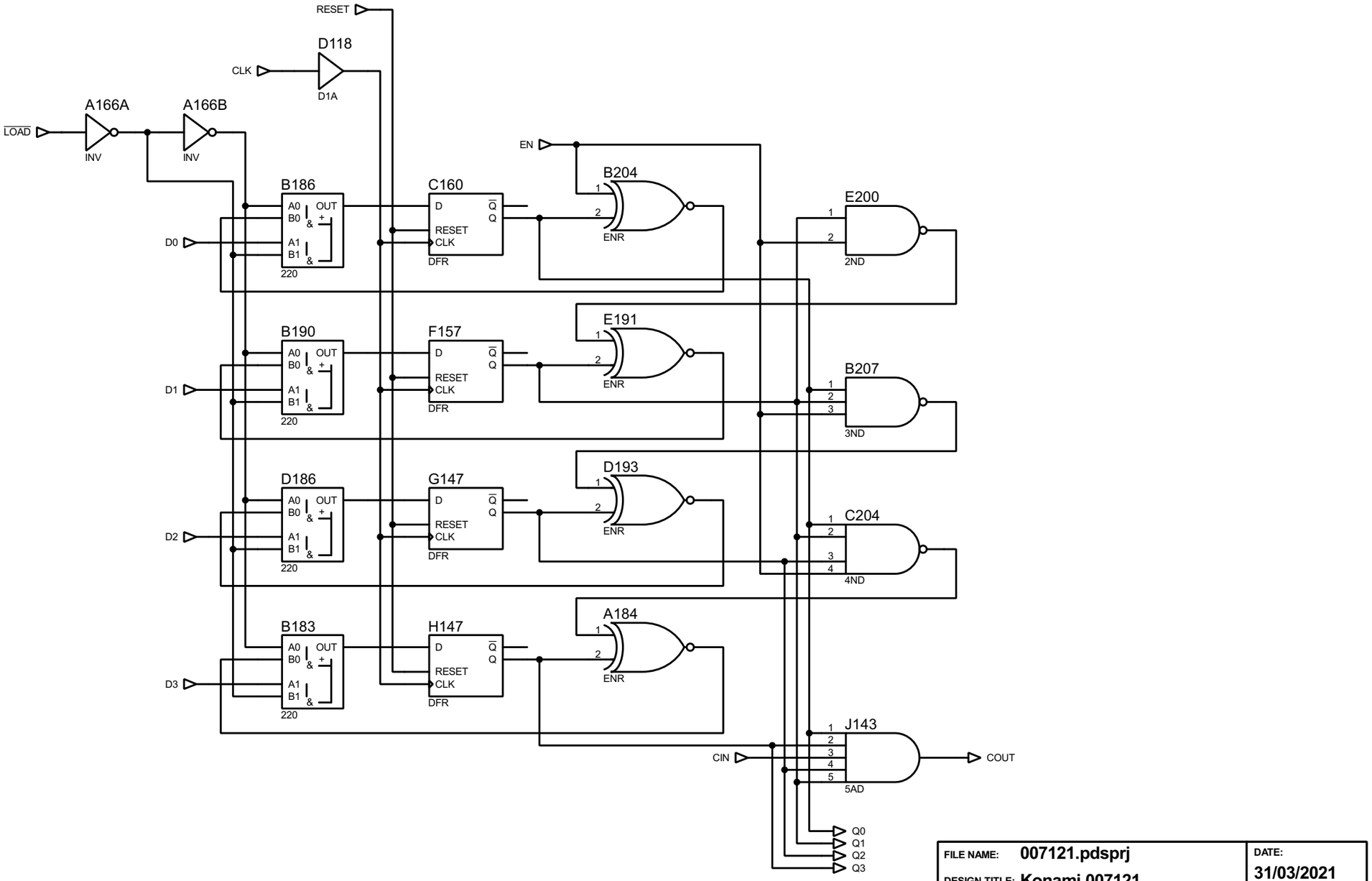

FILE NAME: 007121.pdsprj	DATE: 31/03/2021
DESIGN TITLE: Konami 007121	PAGE: 46 of 52
BY: Sean Gonsalves REV: 0	TIME: 06:44:38

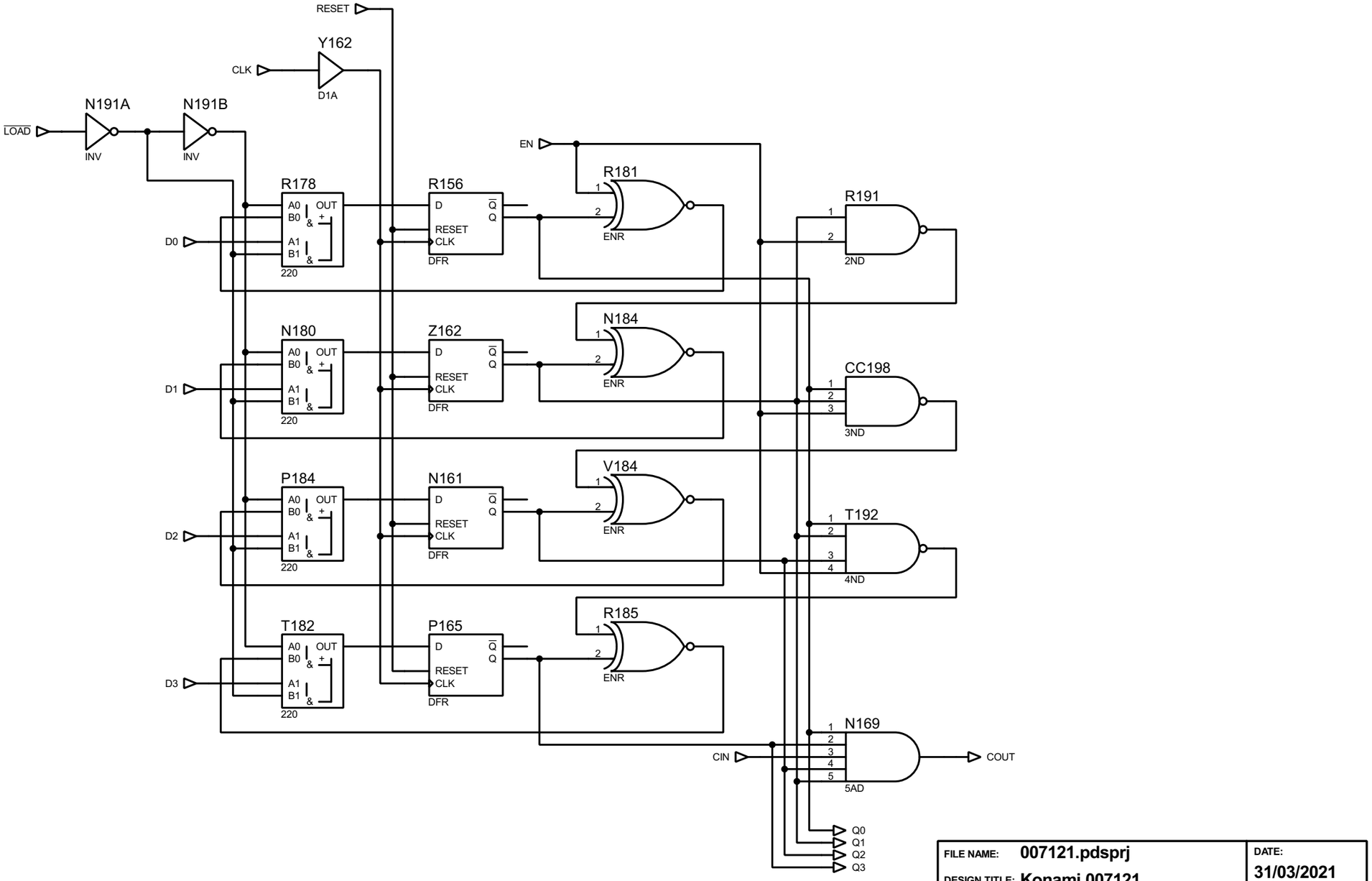

FILE NAME: 007121.pdsprj			DATE: 31/03/2021
DESIGN TITLE: Konami 007121			PAGE: 47 of 52
BY: Sean Gonsalves	REV: 0		TIME: 06:44:38

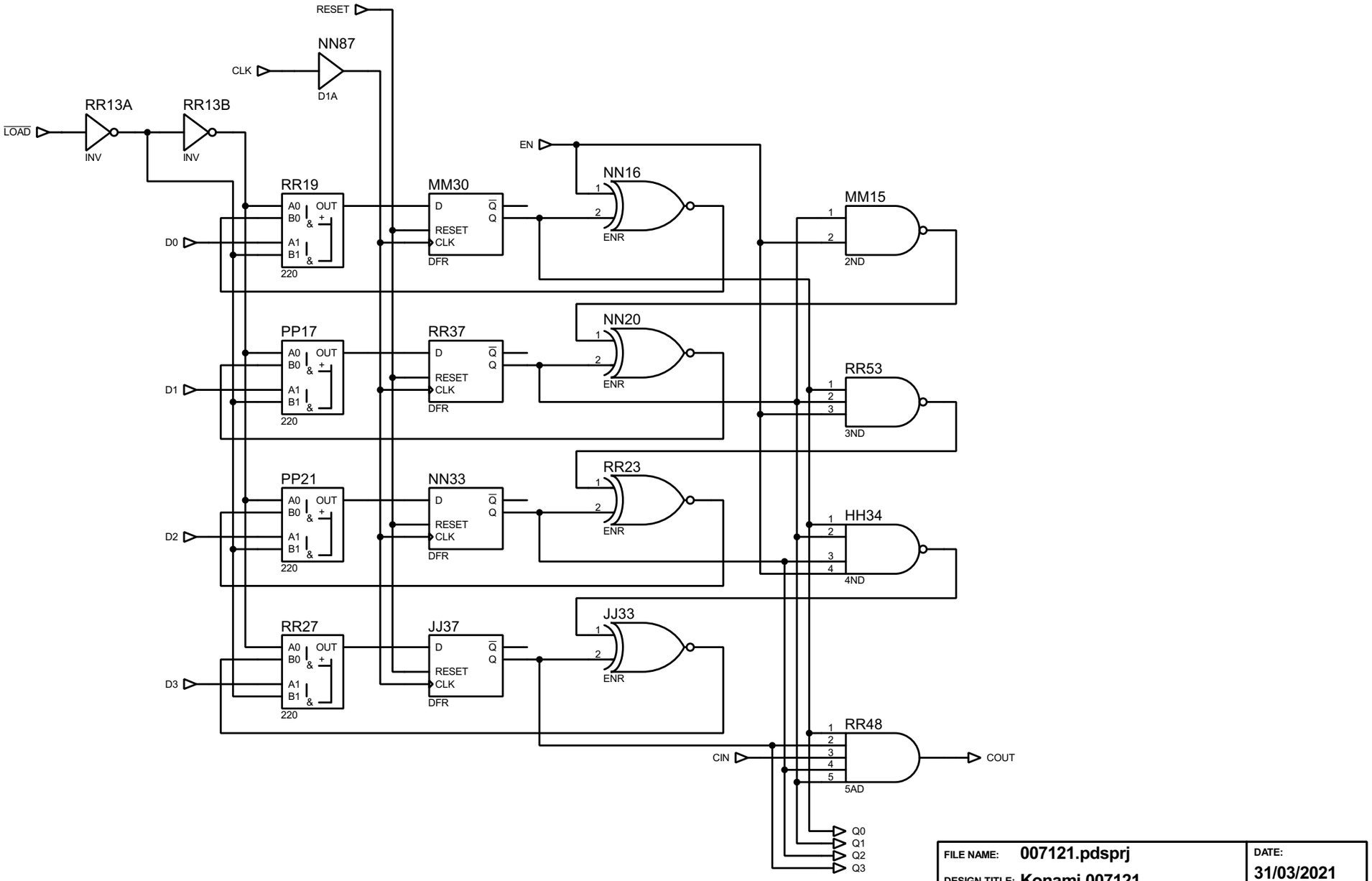

FILE NAME: 007121.pdsprj	DATE: 31/03/2021
DESIGN TITLE: Konami 007121	PAGE: 48 of 52
BY: Sean Gonsalves REV: 0	TIME: 06:44:38

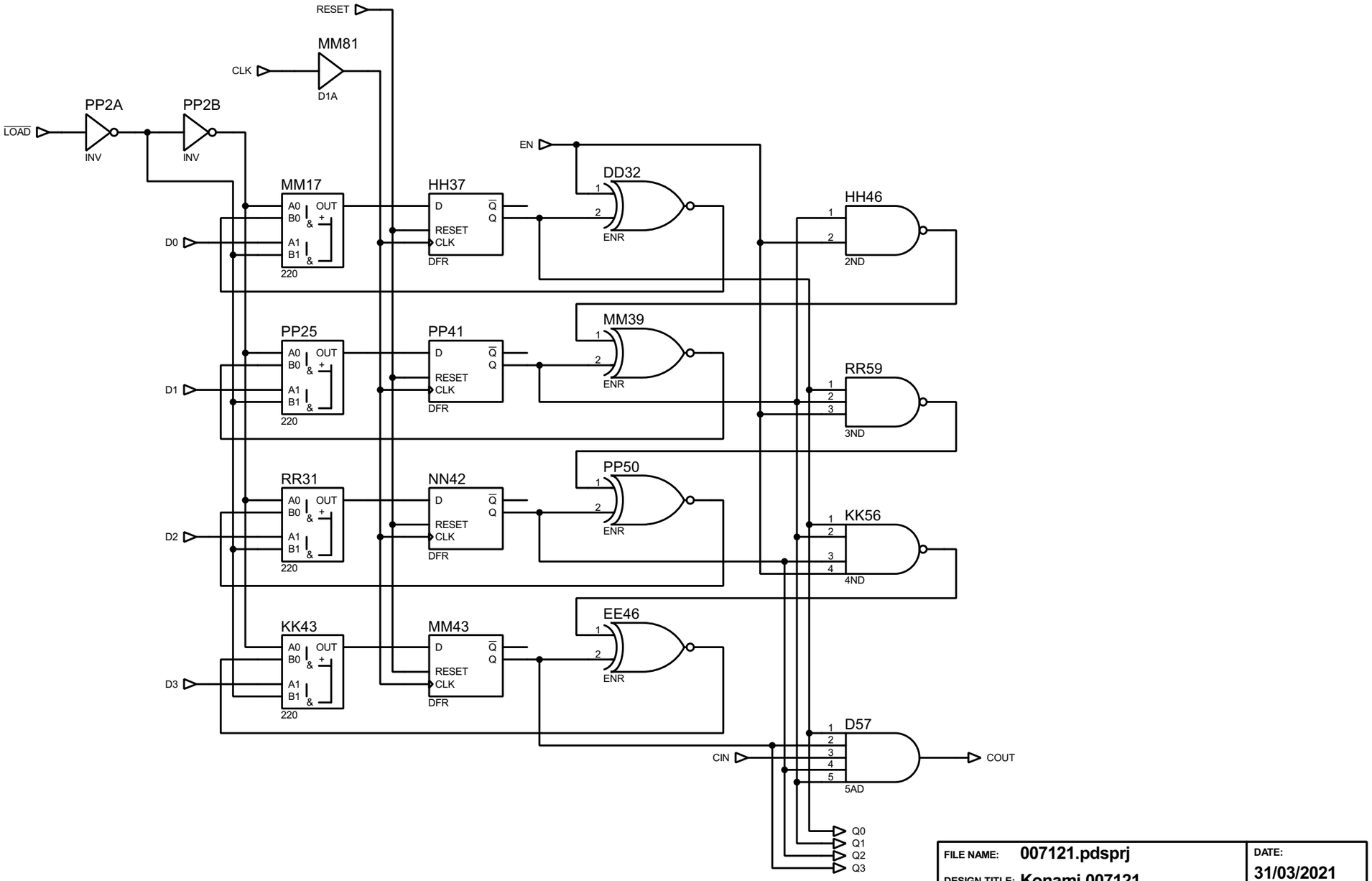

FILE NAME: 007121.pdsprj		DATE: 31/03/2021
DESIGN TITLE: Konami 007121		PAGE: 49 of 52
BY: Sean Gonsalves	REV: 0	TIME: 06:44:38

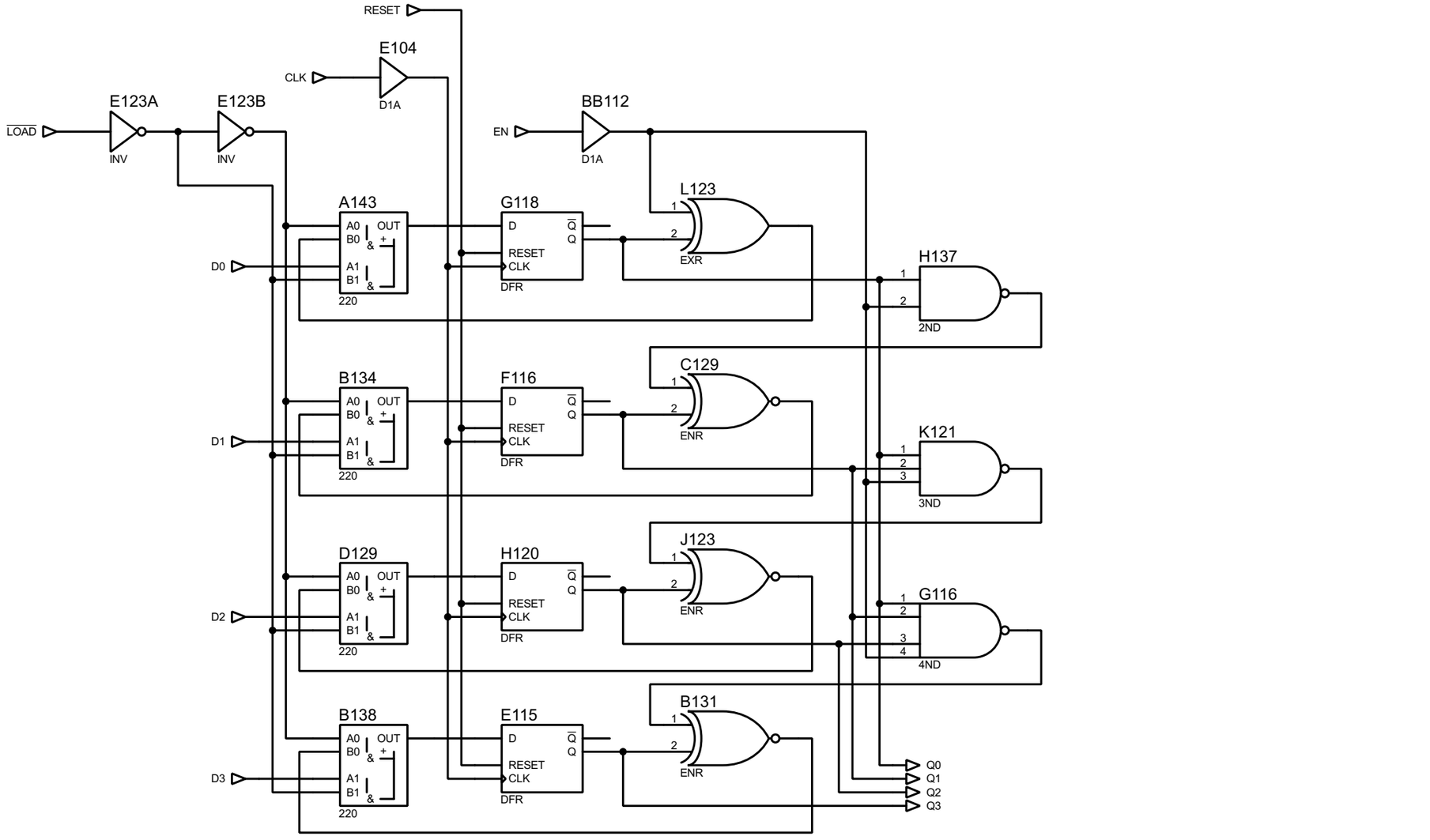

FILE NAME: 007121.pdsprj		DATE: 31/03/2021
DESIGN TITLE: Konami 007121		PAGE: 50 of 52
BY: Sean Gonsalves	REV: 0	TIME: 06:44:38

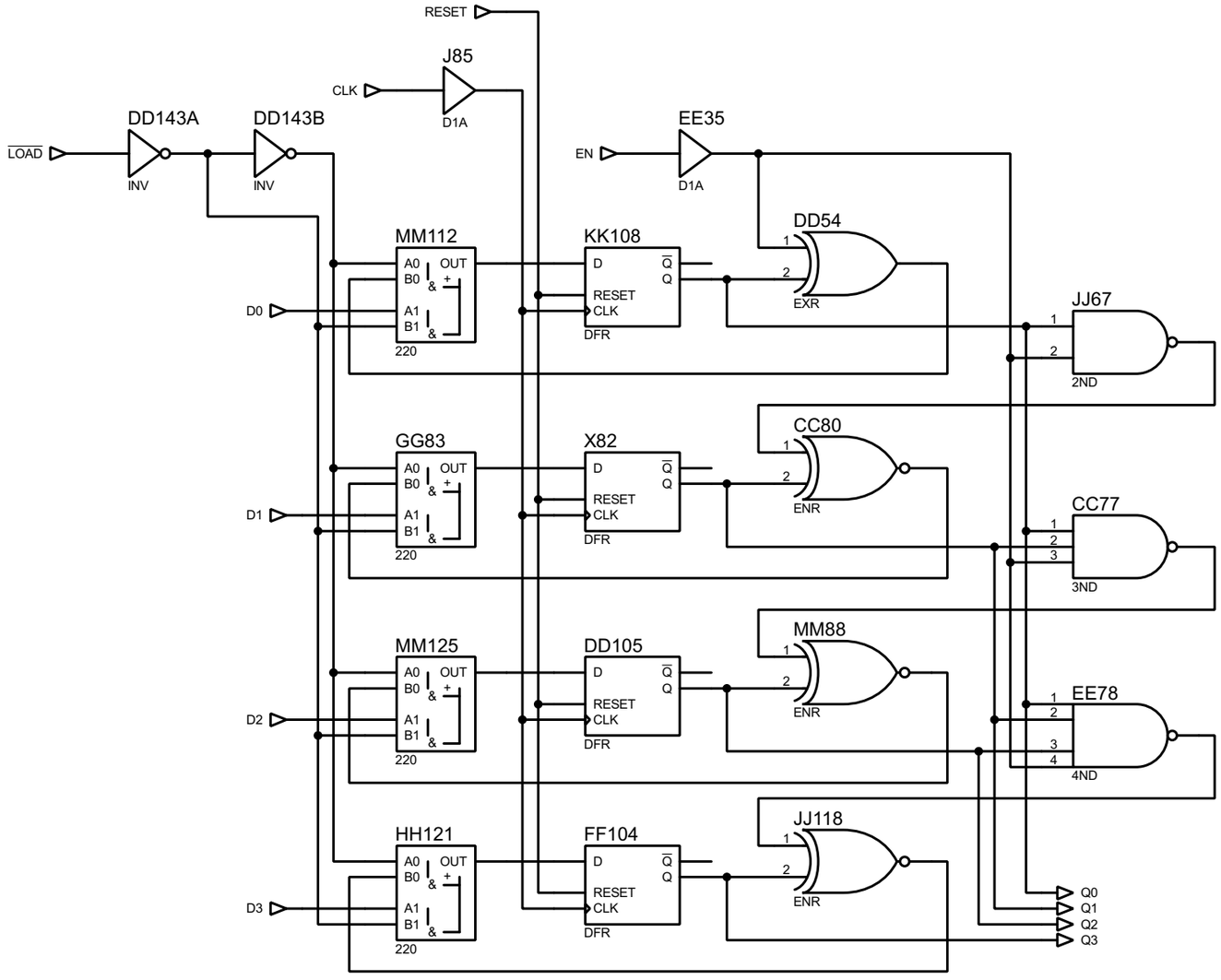

FILE NAME: 007121.pdsprj		DATE: 31/03/2021
DESIGN TITLE: Konami 007121		PAGE: 51 of 52
BY: Sean Gonsalves	REV: 0	TIME: 06:44:38

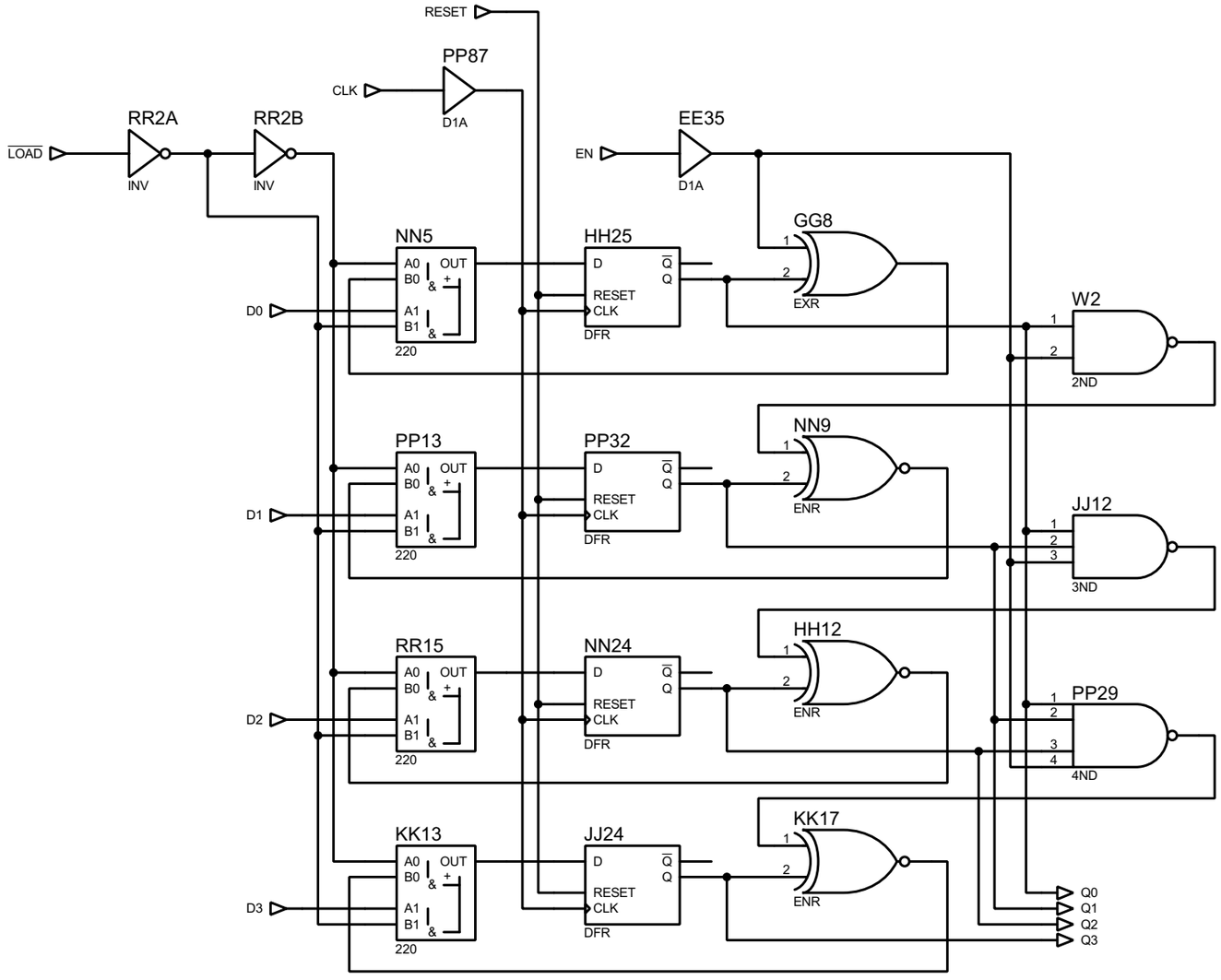

FILE NAME: 007121.pdsprj			DATE: 31/03/2021
DESIGN TITLE: Konami 007121			PAGE: 52 of 52
BY: Sean Gonsalves	REV: 0		TIME: 06:44:38