I2C - OPEN DRAIN ??

Khối Dimmer (PD2, PB3):PD2 (Zero Cross Input): Tín hiệu từ Opto (H11AA1) về cần trở kéo lên (nếu dùng Opto cực C hở). Thêm trở 10kΩ kéo lên 3.3V.PB3 (Triac Output): Kích vào Opto triac (MOC3021). Thêm trở hạn dòng 330Ω - 470Ω nối tiếp.

ADC Dimmer (PC4):Tín hiệu Analog từ biến trở hay bị nhiễu dao động. Thêm: 1 tụ gốm 100nF nối từ chân PC4 xuống GND (ngay sát chân chip) để làm mượt giá trị đọc.

UART (SIM, ESP32, PZEM):Để bảo vệ chân GPIO STM32 trong trường hợp module bên kia chưa cấp nguồn mà STM32 đã cấp (hoặc ngược lại). Thêm: Mắc nối tiếp điện trở 1kΩ trên các đường TX và RX. (Ví dụ: STM32_TX --[1k]-- ESP32_RX).

ESP32 CŨNG XÀI RTOS LUÔN NHA

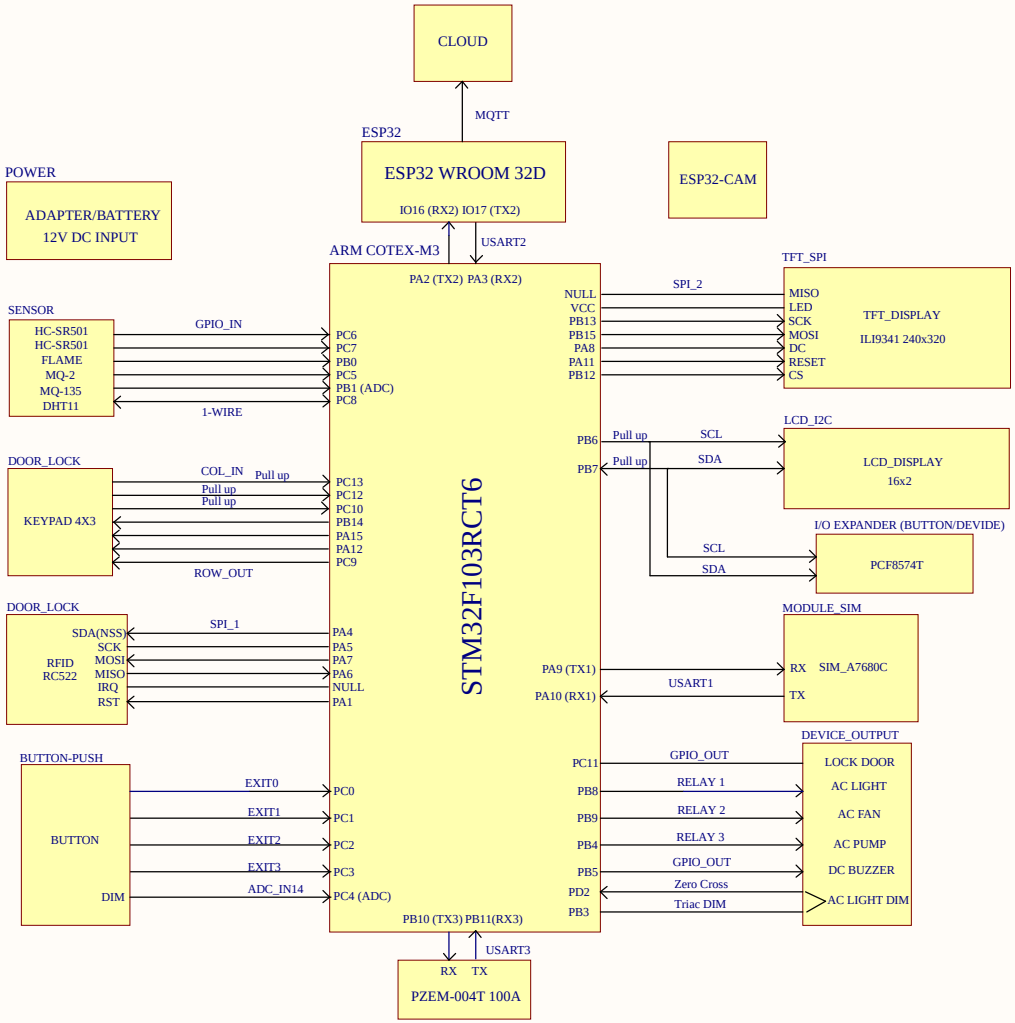

Altium Designer	Title: *	Desc: **BLOCK DIAGRAM.SchDoc**	
	Designed by: *	Document No:	Revision: *
	Checked by: *	Date: *	Size: **A3**
	Approved by: *	Sheet **3** of **5**	

Comment	Description	Designator	Footprint	LibRef	Quantity
UPM1V102MHD	CAPACITOR ALUM ELECT 1000UF, 35V, RADIAL; Capacitance:1000µF; Capacitance Tolerance:Â± 20%; Voltage Rating:35V; Life Time @ Temperature:5000 hours @ 105Â°C; Height:31.5mm; Diameter:12.5mm; Capacitor Mounting:Through Hole	C1	CAPPRD500W80D125 0H3350	UPM1V102MHD	1
1uF	CAP, size 0603, 1uF	C2, C4, C12	CAP_0603	01060310510	3
100nF	CAP, size 0603, 100nF	C3, C5, C6, C15, C19, C20, C22, C23, C24, C25, C26, C27, C28, C29, C30, C31, C32, C33, C34, C35, C36, C37, C38, C40, C42, C44	CAP_0603	01060310410	26
47uF	V-Chip, D5 x H5.5mm, 47uF, 16V	C7, C8	WCAP-ASLI_D5H5.5	865080342006	2
10uF	CAP, size 0603,10uF	C9, C10, C16, C21, C41, C43, C45	CAP_0603	01060310010	7
10nF	CAP, size 0603, 10nF	C11, C14	CAP_0603	01060310310	2
47n	CAP, size 0603, 47nF	C13	CAP_0603	01060347310	1
20pF	CAP, size 0603, 22pF	C17, C18	CAP_0603	01060322010	2
4.7uF	CAP, size 0603, 1uF	C39	CAP_0603	01060310510	1
D Schottky	Schottky Diode SS54A Schottky Diode, SS34	D1, D2, D4	SS34	D Schottky	3
LED SMD	LED	D3	LED_0805_Blue	LED SMD	1
SS210	Schottky Diode	D5, D6, D7, D8	SS34	D Schottky	4
RUEF500	Polymeric PTC Resettable Fuse 30V 5 A Ih Through Hole Radial, Disc	F1	RUEF400	RUEF500	1
Header 4P 2.54 Duc Thang	Cắm	H1, H10, H11, H12	XH2.54M-4	Header 4P 2.54 Duc Thang	4
Header 8P 2.54 Duc Thang	Cắm	H2, H7, H19	XH2.54M-8	Header 8P 2.54 Duc Thang	3
Header 2P 2.54	Cắm	H3, H4, H6, H9	XH2.54M-2	Header 2P 2.54 Duc Thang	4
	Cắm	H5	XH2.54M-3	Header 3P 2.54 Duc Thang	1
Header 7P 2.54 Duc Thang	Cắm	H8	XH2.54M-7	Header 7P 2.54 Duc Thang	1
DHT11	Cắm	H13	XH2.54M-3	Header 3P 2.54 Duc Thang	1
FLAME SENSOR	Cắm	H14	XH2.54M-3	Header 3P 2.54 Duc Thang	1
HC-SR501	Cắm	H15, H16	XH2.54M-3	Header 3P 2.54 Duc Thang	2
MQ-2	Cắm	H17	XH2.54M-3	Header 3P 2.54 Duc Thang	1
MQ-135	Cắm	H18	XH2.54M-3	Header 3P 2.54 Duc Thang	1
Header 4P 2.54	Cắm	H20	XH2.54M-4	Header 4P 2.54 Duc Thang	1
LOCK DOOR	Cắm	H21	XH2.54M-2	Header 2P 2.54 Duc Thang	1
Warning Light, buzzer		J1	PHOENIX_1935161	Light_12V	1
Jack DC	Jack DC input	JDC1	DC-IN	Jack DC	1
Jumper	Cắm	JP1, JP2	JP 1x3 DT	JP 1x3 2.54 Duc Thang	2
JP 1x5 2.54	Cắm	JP3	JP 1X5 DT	JP 1x5 2.54 Duc Cong	1
JP 1x6 2.54	Cắm	JP4	JP 1x6 DT	JP 1x6 2.54 Duc Thang	1
10uH, 5.6A	WE-PD2A SMT Power Inductor, size 5848, 10uH, 2.2A	L1	WE-PD2A_5848	7B477410	1
691322310002	WR-TBL Series 322 Horizontal PCB Header, THT, pitch 3.81mm, 2p	P1, P2, P3, P4	691322310002	691322310002	4
MMBTA42	NPN Bipolar Transistor	Q1, Q3, Q5	SOT23B	BC817	3
BC817	NPN Bipolar Transistor	Q2	SOT23B	BC817	1
AO3400A	N-Channel 30 V 5.7A (Ta) 1.4W (Ta) Surface Mount SOT-23-3	Q4	SOT95P280X125-3N	AO3400A	1
22	RES, 22 Ohm, size 0603, 1%	R1, R43, R44, R45	resistor_0603	0006031031	4
100k	RES, 100k Ohm, size 0603, 1%	R2	resistor_0603	0006031041	1
8.2k	RES, 8.2 kOhms, size 0603, 1%	R3	resistor_0603	0006038251	1
5.6k	RES, 5.6k Ohm, size 0603, 1%	R4	resistor_0603	0006035621	1
30k	RES, 30k Ohm, size 0603, 1%	R5	resistor_0603	0006033205	1
20k	RES, 20 kOhms, size 0603, 1%	R6	resistor_0603	0006032031	1
1.6k	RES, 1.5 kOhms, size 0603, 1%	R7	resistor_0603	0006031521	1
10k	RES, 10k Ohm, size 0603, 1%	R8, R10, R14, R15, R18, R20, R23, R24, R25, R26, R36, R40	resistor_0603	0006031031, 0006032221	12
220	RES, 220 Ohm, size 0603, 1%, RES, 330 Ohm, size 0603, 1%	R9, R11, R19, R21, R22, R27, R33, R37, R41	resistor_0603	0006031031, 0006032221, 0006032211	9
1k	RES, 1k Ohm, size 0603, 1%	R12, R13, R28, R29, R30	resistor_0603	0006031031	5
4.7k	RES, 4.7k Ohm, size 0603, 1%	R16, R17	resistor_0603	0006031031	2
2k	RES, 2k Ohm, size 0603, 1%	R31, R32	resistor_0603	0006031031	2
2.2k	RES, 2.2k Ohm, size 0603, 1%	R34, R38, R42	resistor_0603	0006032221	3
1.2k	RES, 1.2k Ohm, size 0603, 1%	R35, R39	resistor_0603	0006032221	2
HF46F	SeriesHF46F 12V 1 Form A 1A Gold Plated SUBMINIATURE INTERMEDIATE POWER RELAY	RL1, RL2, RL3	HF46F	HF46F	3
Button SMD	Nút Nhấn 4x4mm Cao 1.5mm 4 Chân SMD Chống Nước	S1	BUTTON	Button SMD	1
AMS1117-3.3V	AMS1117-3.3V, OUT 3.3V 1A.	U1	AMS1117-3.3V SOT223	AMS1117-3.3V	1
TPS54231D	Buck Switching Regulator IC Positive Adjustable 0.8V 1 Output 2A 8-SOIC (0.154", 3.90mm Width)	U2	SOIC8	TPS54231	1
Module sim	Module 4G A7682S Volte Ra chân V2 TDM2431, 4.5-16V, 28×26.8×5.5mm, Mức logic 1/OTTL(Serial 3.3V)	U3	MODULESIM_NEW	Module_A7682S_V2	1
STM32F103RCT6	ARMÂ® CortexA®-M3 STM32F1 Microcontroller IC 32-Bit 72MHz 256KB (256K x 8) FLASH 64-LQFP (10x10)	U4	QFP50P1200X1200X160-64N	STM32F103RCT6	1
ESP32-DEVKITC-32D	WiFi Development Tools (802.11) ESP32 General Development Kit, ESP32-WROOM-32D on the board	U5	MODULE_ESP32-DEVKITC-32D	ESP32-DEVKITC-32D	1
PC817X2NIPW	PC817 series, SMD, I_F (max) = 500mA, V_F (max) = 1.4V, Breakdown voltage: BV_CE = 80V, BV_BE = 6V.	U6, U7, U8	PC817XI_SHP	PC817X2NIPW	3
Varistor	07D471K 470V	VR1	07D471K	07D471K 470V	1
HC49S 8MHZ	Description	XTAL1	XTAL_HC49S_MTC	HC49S-12-30-50-70-80-ATF	1