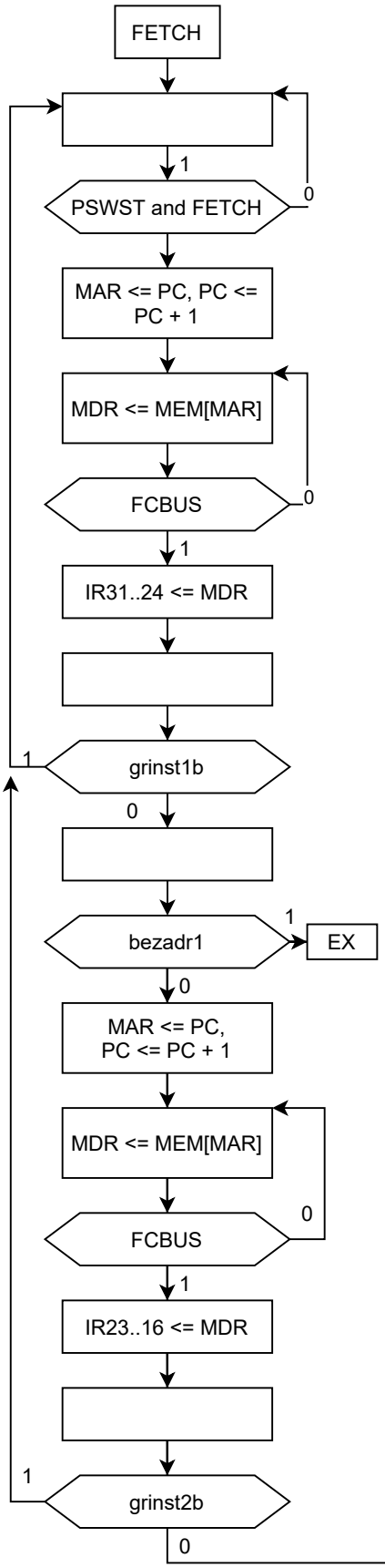
FETCH
PSWST and FETCH
MAR <= PC, PC <= PC + 1
MDR <= MEM[MAR]
FCBUS
IR31..24 <= MDR
grinst1b
bezadr1
EX
MAR <= PC, PC <= PC + 1
MDR <= MEM[MAR]
FCBUS
IR23..16 <= MDR
grinst2b

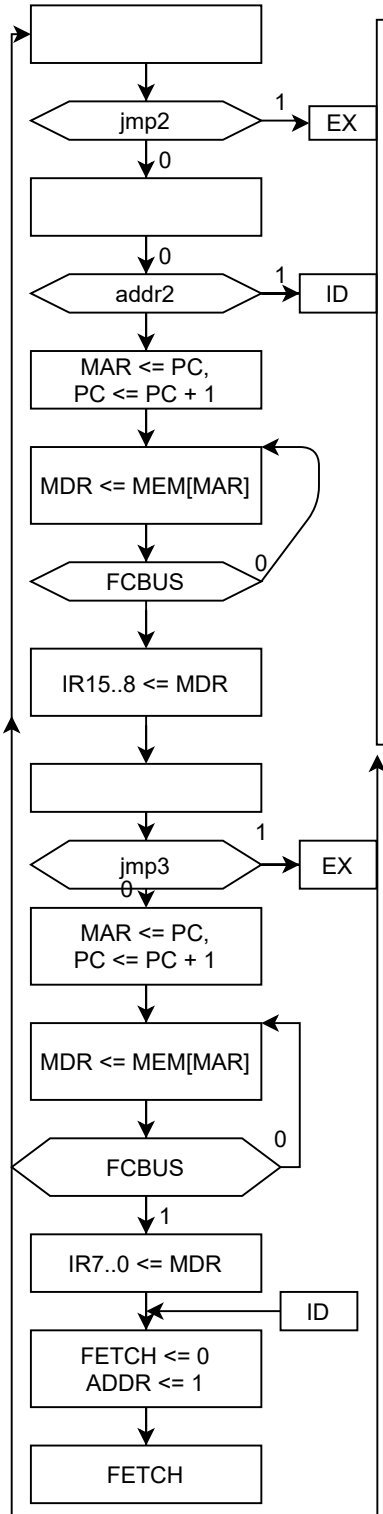
jmp2
EX
addr2
ID
MAR <= PC, PC <= PC + 1
MDR <= MEM[MAR]
FCBUS
IR15..8 <= MDR
jmp3
EX
MAR <= PC, PC <= PC + 1
MDR <= MEM[MAR]
FCBUS
IR7..0 <= MDR
ID
FETCH <= 0
ADDR <= 1
FETCH

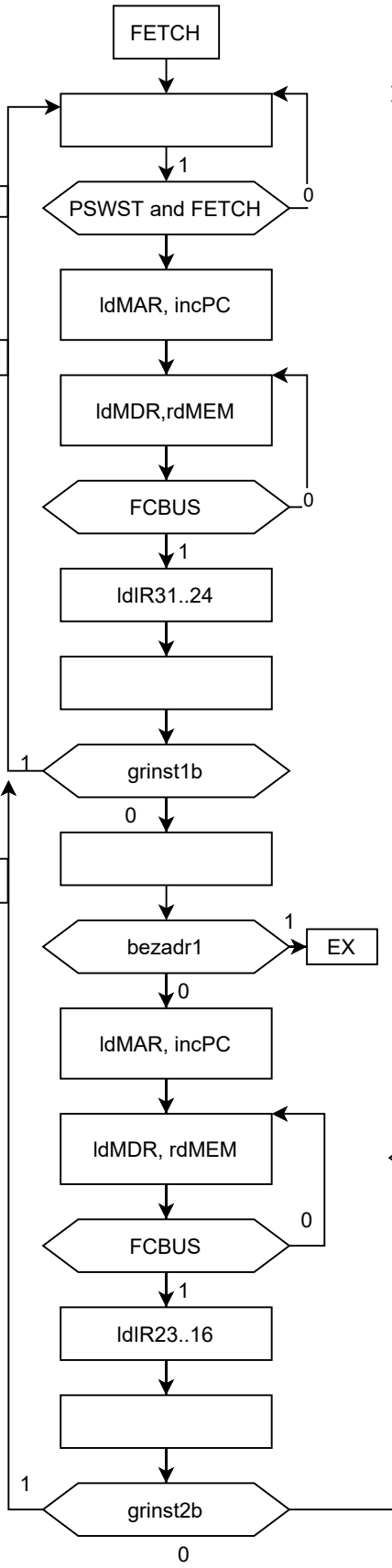
FETCH
PSWST and FETCH
ldMAR, incPC
ldMDR,rdMEM
FCBUS
ldIR31..24
grinst1b
bezadr1
EX
ldMAR, incPC
ldMDR, rdMEM
FCBUS
ldIR23..16
grinst2b

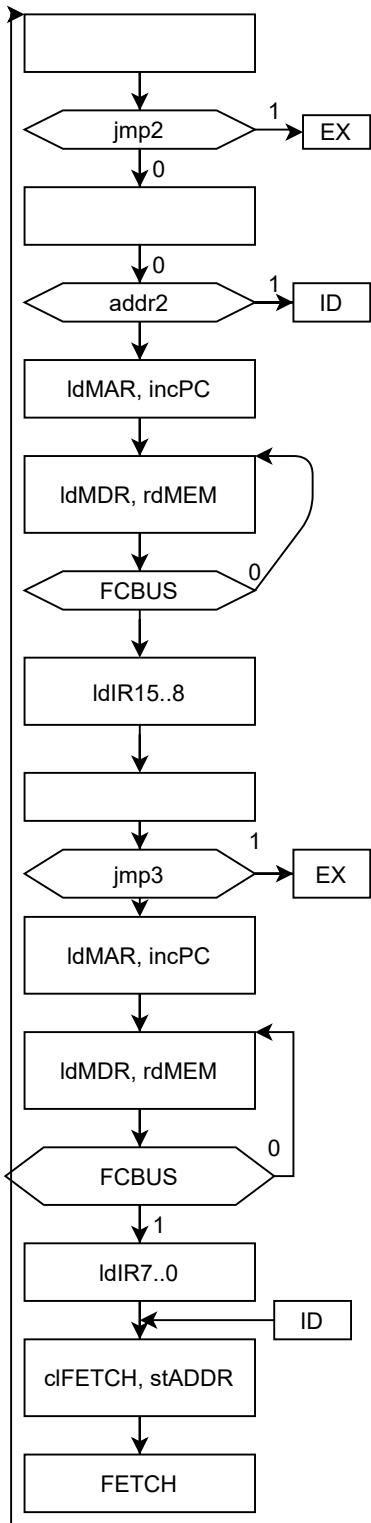
jmp2
EX
addr2
ID
ldMAR, incPC
ldMDR, rdMEM
FCBUS
ldIR15..8
jmp3
EX
ldMAR, incPC
ldMDR, rdMEM
FCBUS
ldIR7..0
ID
clFETCH, stADDR
FETCH