CPSC 2610
Lab Assignment 7
Quoc Ho ID: 001200151

1.

a. State Table

X	Y	Z	Y+	Z+
0	0	0	0	1
0	0	1	1	1
0	1	0	0	0
0	1	1	1	0
1	0	0	0	1
1	0	1	1	0
1	1	0	1	1
1	1	1	0	0

b.

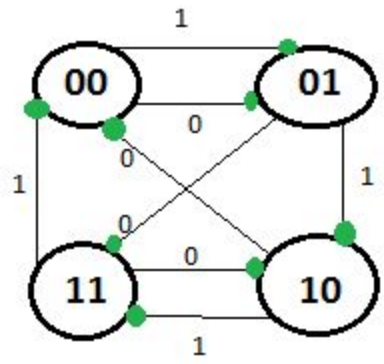

c.

Y+ = Σm(1, 3, 5, 6)

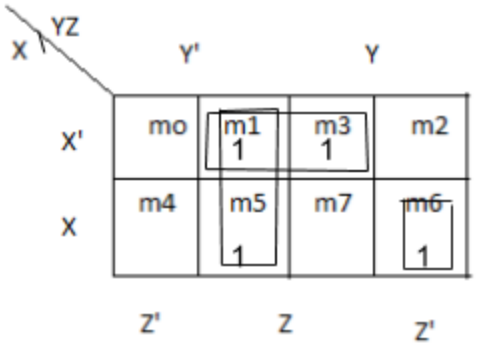

Y+ = Y'Z + X'Z + XYZ' = XY⊕Z

Z+ = Σm(0, 1, 4, 6)

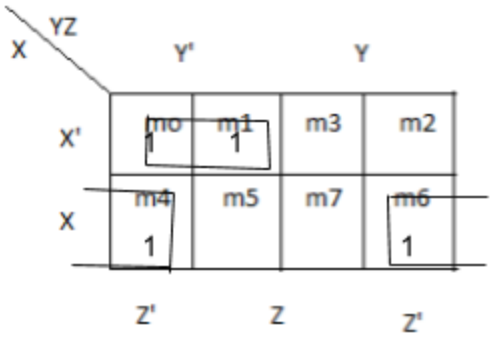

Z+ = X'Y' + XZ'

d.

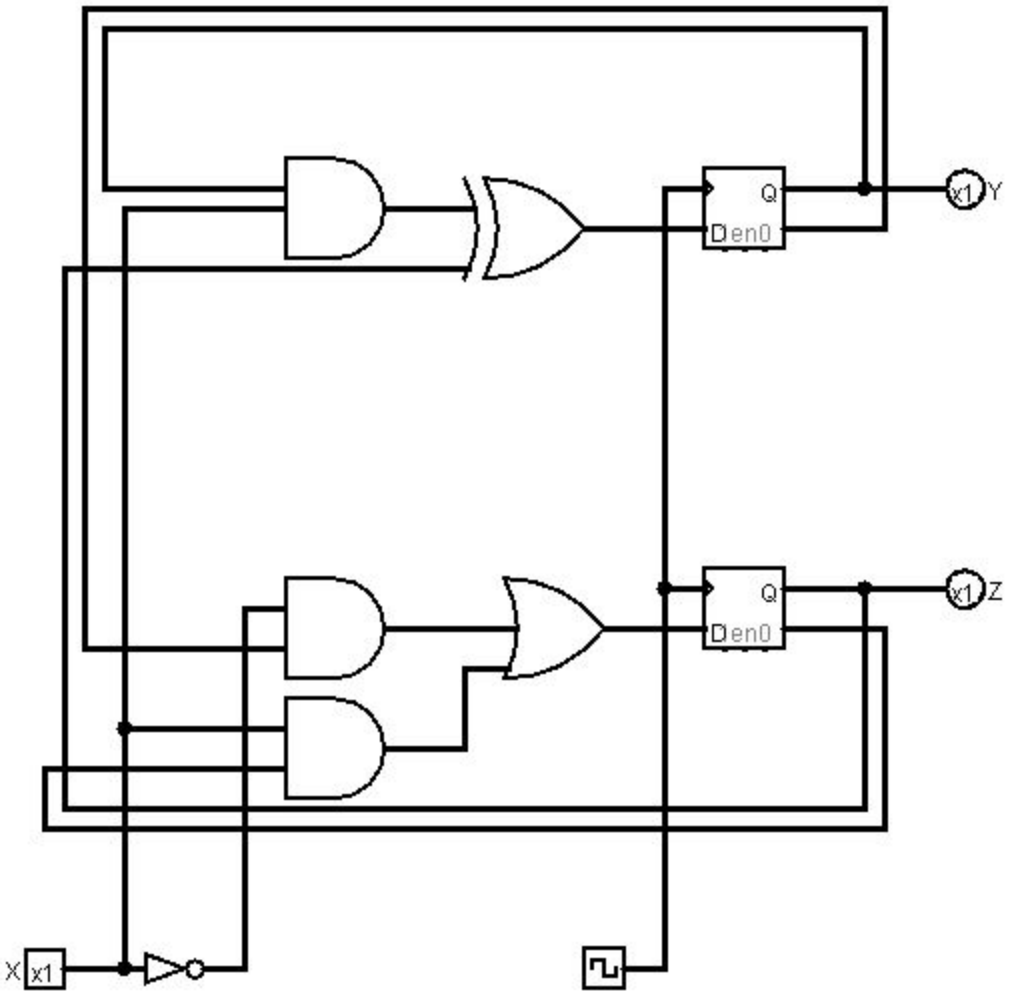

e.

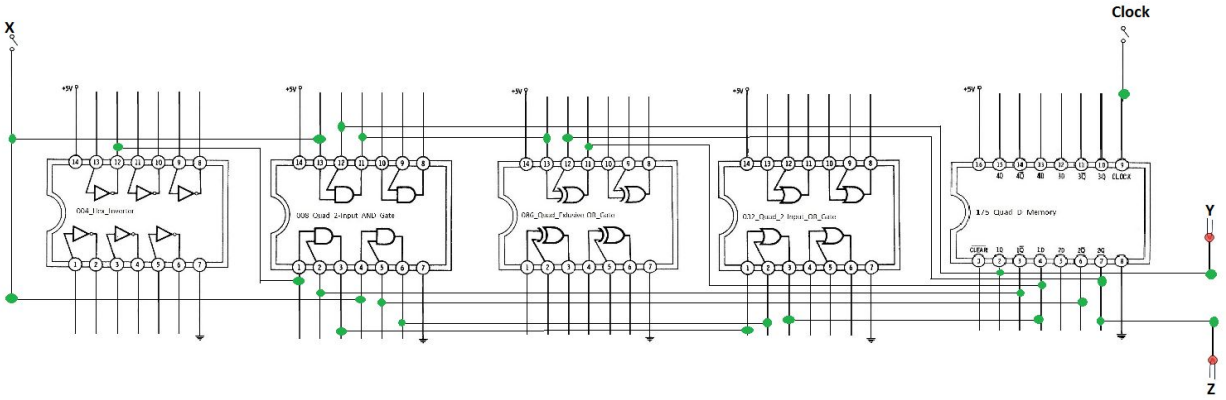

2. Read is input and write is output.

a. To input the data, Enable Read input should be 0. To select an address to store the input, use Read address to choose between 4 addresses, 00 01 10 and 11. Then input the desired input by read 1234.

To output the data, Write Enable should be 0. Then select an address with Write Address A and B, 00 01 10 and 11. Finally the output data will be displayed with 4 LEDs connect to each of Write 1234.

3.

a.

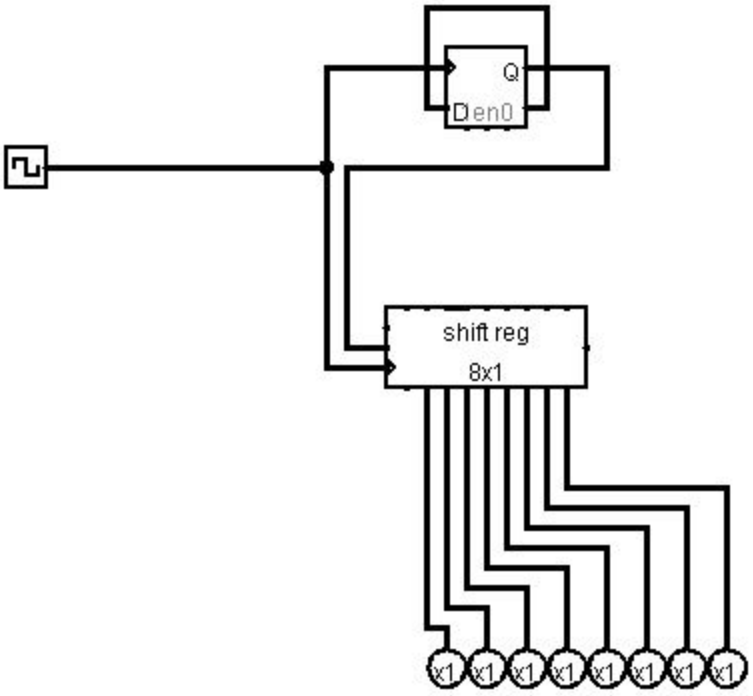

b.

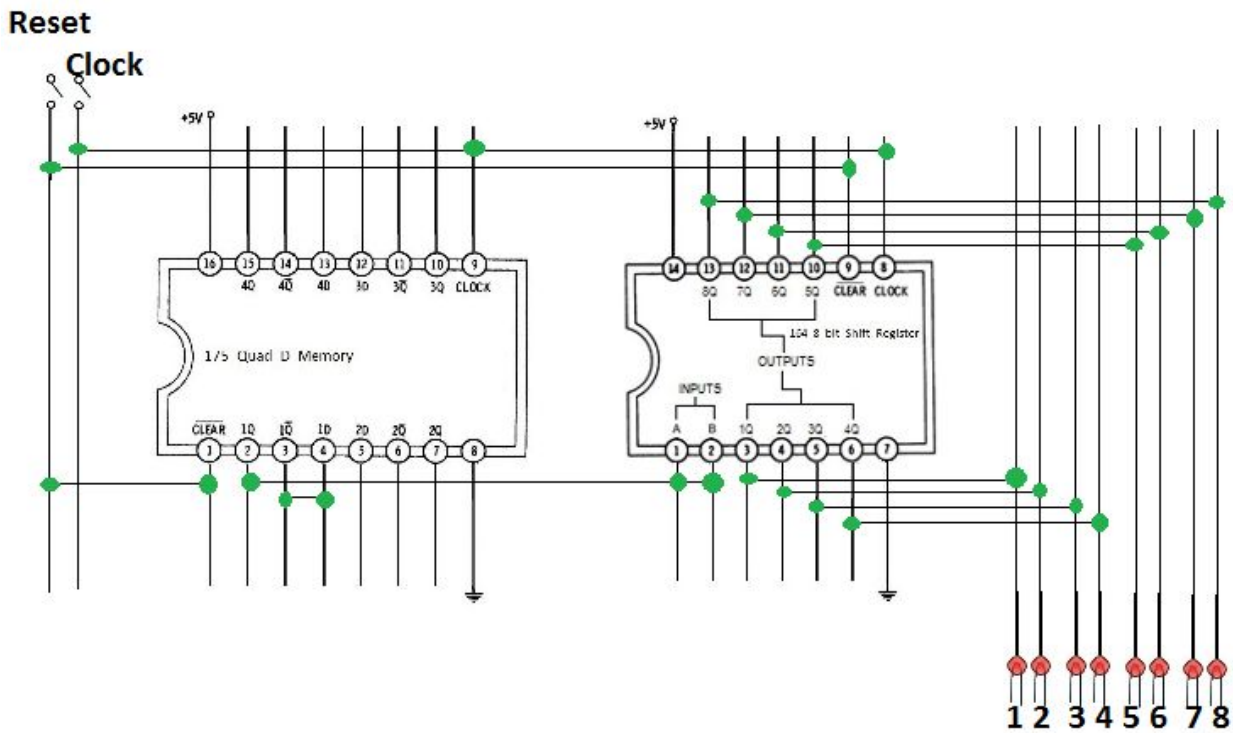
Reset
Clock
+5V
+5V
175 Quad D Memory
CLEAR
CLOCK
104 8 bit Shift Register
OUTPUTS
INPUTS
1 2 3 4 5 6 7 8