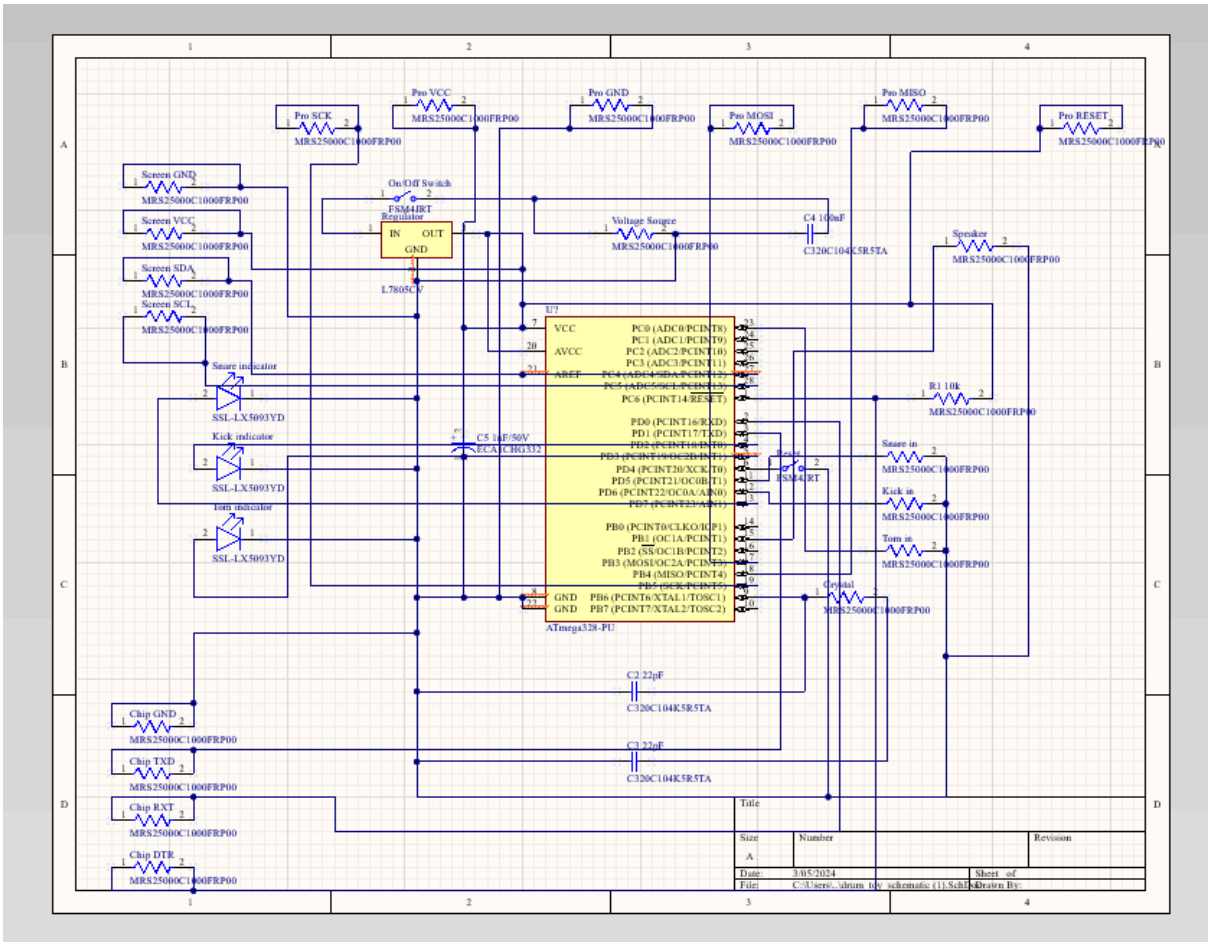
Pro SCK
Pro VCC
Pro GND
Pro MOSI
Pro MISO
Pro RESET
Screen GND
Screen VCC
Screen SDA
Screen SCL
On/Off Switch
FSM4JRT
Regulator
IN
OUT
GND
L7805CV
Voltage Source
C4 100nF
C320C104K5R5TA
Speaker
U?
VCC
AVCC
AREF
PC0 (ADC0/PCINT8)
PC1 (ADC1/PCINT9)
PC2 (ADC2/PCINT10)
PC3 (ADC3/PCINT11)
PC6 (PCINT14/RESET)
PD0 (PCINT16/RXD)
PD1 (PCINT17/TXD)
PD4 (PCINT20/XCK/T0)
PD5 (PCINT21/OC0B/T1)
PD6 (PCINT22/OC0A/AIN0)
PB0 (PCINT0/CLKO/ICP1)
PB1 (OC1A/PCINT1)
PB2 (SS/OC1B/PCINT2)
PB3 (MOSI/OC2A/PCINT3)
PB4 (MISO/PCINT4)
GND
PB6 (PCINT6/XTAL1/TOSC1)
PB7 (PCINT7/XTAL2/TOSC2)
ATmega328-PU
Snare indicator
Kick indicator
Tom indicator
SSL-LX5093YD
C5 1uF/50V
ECA1CHG332
R1 10k
Snare in
Kick in
Tom in
Crystal
C2 22pF
C3 22pF
Chip GND
Chip TXD
Chip RXT
Chip DTR
Title
Size
Number
Revision
Date: 3/05/2024
Sheet of
File: C:\Users\...\drum_tdy_schematic (1).SchDoc
Drawn By:

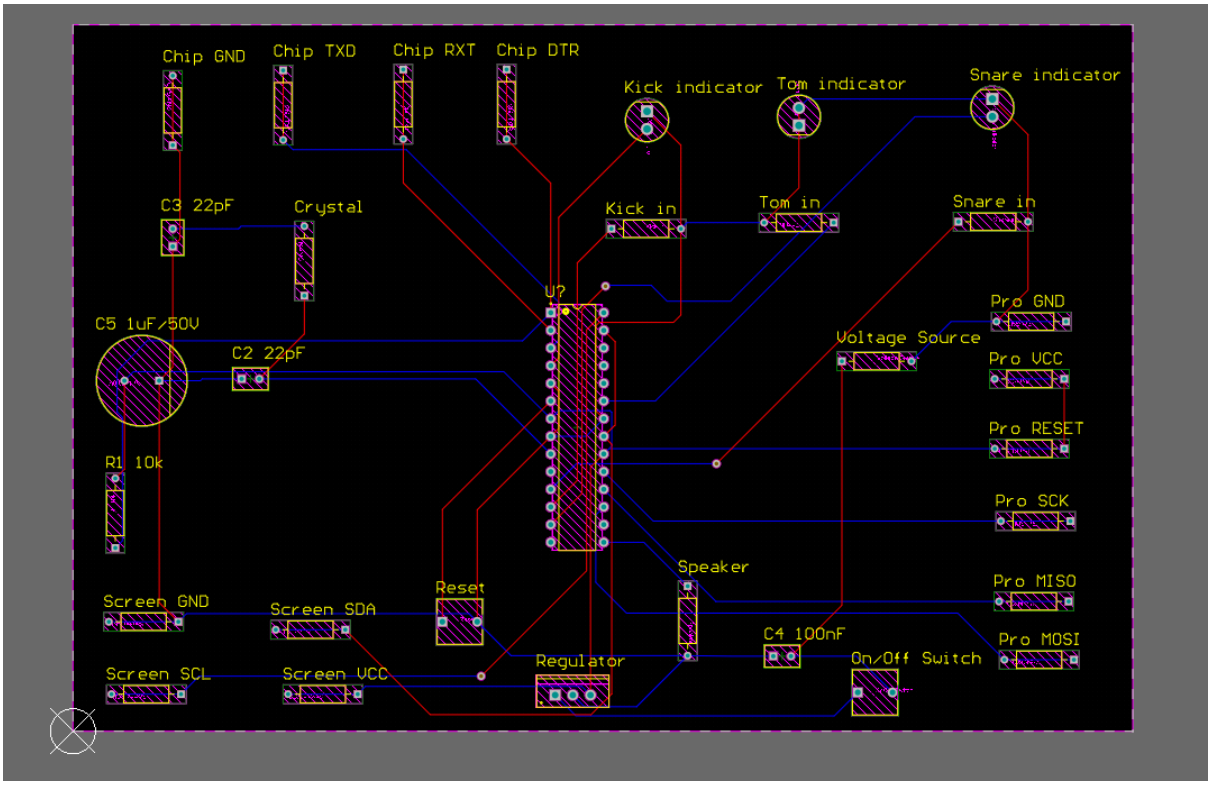
Chip GND
Chip TXD
Chip RXT
Chip DTR
Kick indicator
Tom indicator
Snare indicator
C3 22pF
Crystal
Kick in
Tom in
Snare in
U?
C5 1uF/50V
C2 22pF
Pro GND
Voltage Source
Pro VCC
Pro RESET
R1 10k
Pro SCK
Speaker
Pro MISO
Screen GND
Screen SDA
Reset
C4 100nF
Pro MOSI
Screen SCL
Screen VCC
Regulator
On/Off Switch