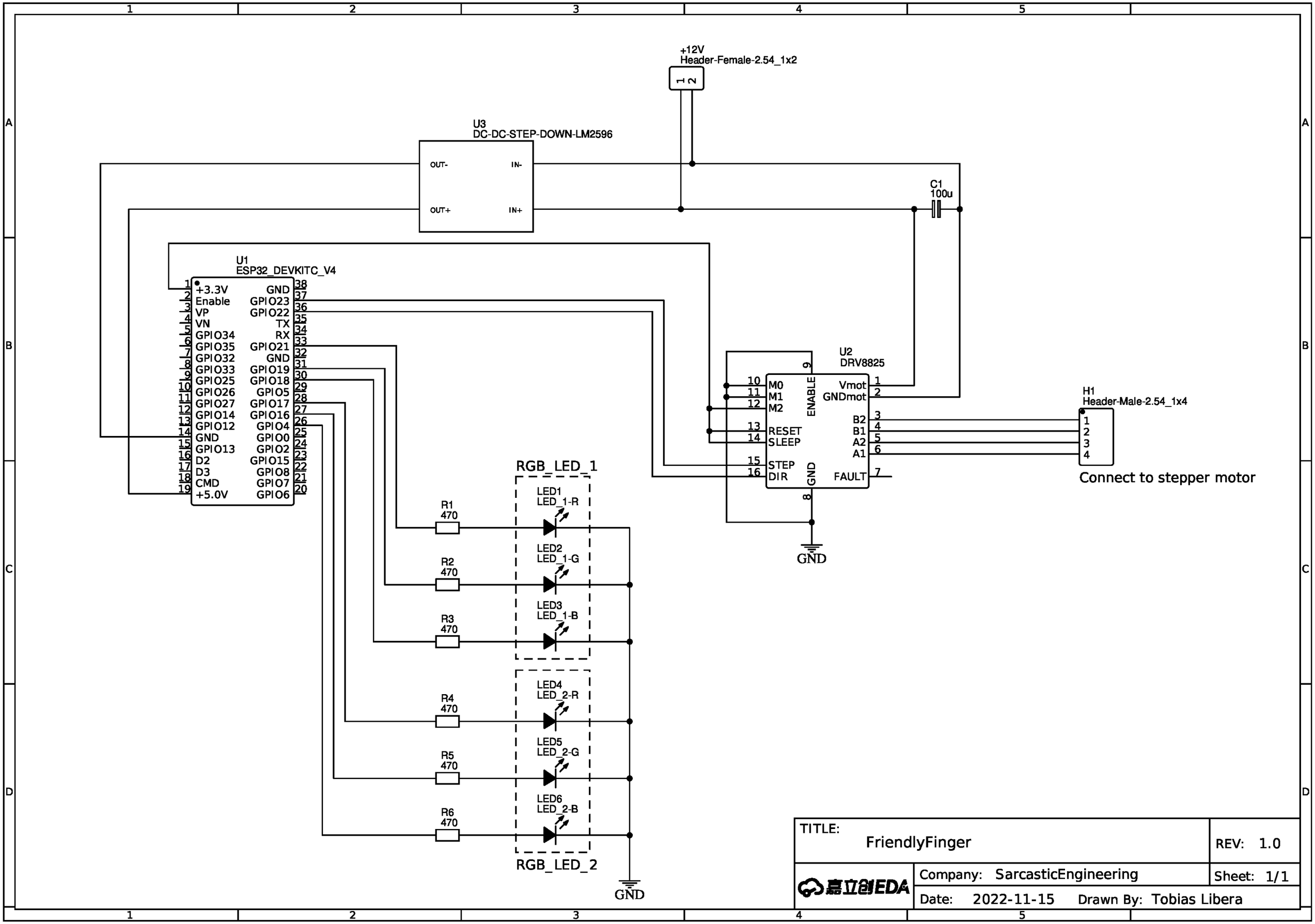

TITLE: FriendlyFinger		REV: 1.0
嘉立创EDA	Company: SarcasticEngineering	Sheet: 1/1
	Date: 2022-11-15 Drawn By: Tobias Libera	