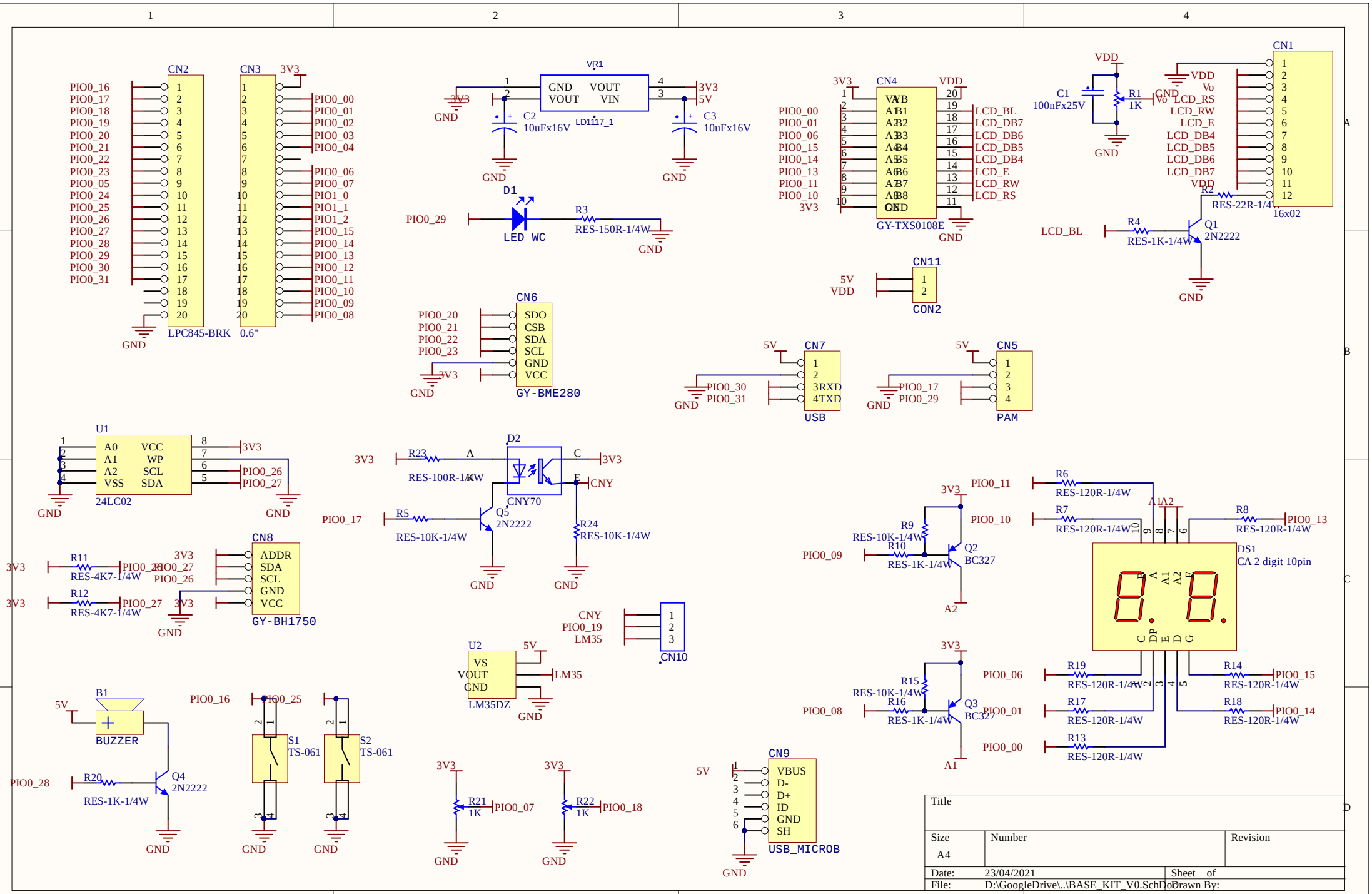
CN2
CN3
LPC845-BRK
0.6"
VR1
LD1117_1
C2 10uFx16V
C3 10uFx16V
D1
LED WC
R3 RES-150R-1/4W
CN4
GY-TXS0108E
C1 100nFx25V
R1 1K
CN1
16x02
R2 RES-22R-1/4W
R4 RES-1K-1/4W
Q1 2N2222
CN11
CON2
CN6
GY-BME280
CN7
USB
CN5
PAM
U1
24LC02
D2
CNY70
R23 RES-100R-1/4W
R5 RES-10K-1/4W
Q5 2N2222
R24 RES-10K-1/4W
R11 RES-4K7-1/4W
R12 RES-4K7-1/4W
CN8
GY-BH1750
CN10
U2
LM35DZ
B1
BUZZER
R20 RES-1K-1/4W
Q4 2N2222
S1 TS-061
S2 TS-061
R21 1K
R22 1K
CN9
USB_MICROB
R9 RES-10K-1/4W
R10 RES-1K-1/4W
Q2 BC327
R15 RES-10K-1/4W
R16 RES-1K-1/4W
Q3 BC327
R6 RES-120R-1/4W
R7 RES-120R-1/4W
R8 RES-120R-1/4W
DS1
CA 2 digit 10pin
R19 RES-120R-1/4W
R14 RES-120R-1/4W
R17 RES-120R-1/4W
R18 RES-120R-1/4W
R13 RES-120R-1/4W
Title
Size A4
Number
Revision
Date: 23/04/2021
Sheet of
File: D:\GoogleDrive\..\BASE_KIT_V0.SchDoc
Drawn By: