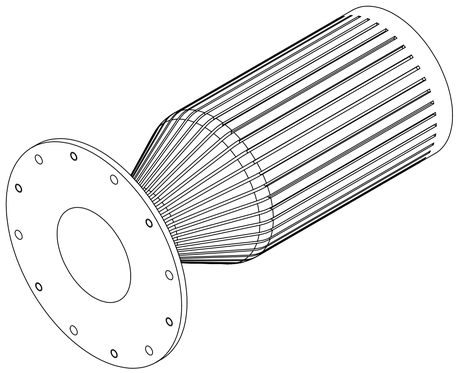

SCALE 1 : 2

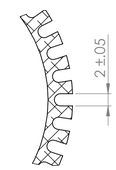

DETAIL A
SCALE 2 : 1

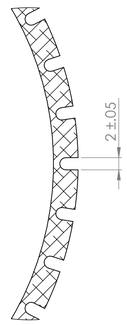

DETAIL B
SCALE 2 : 1

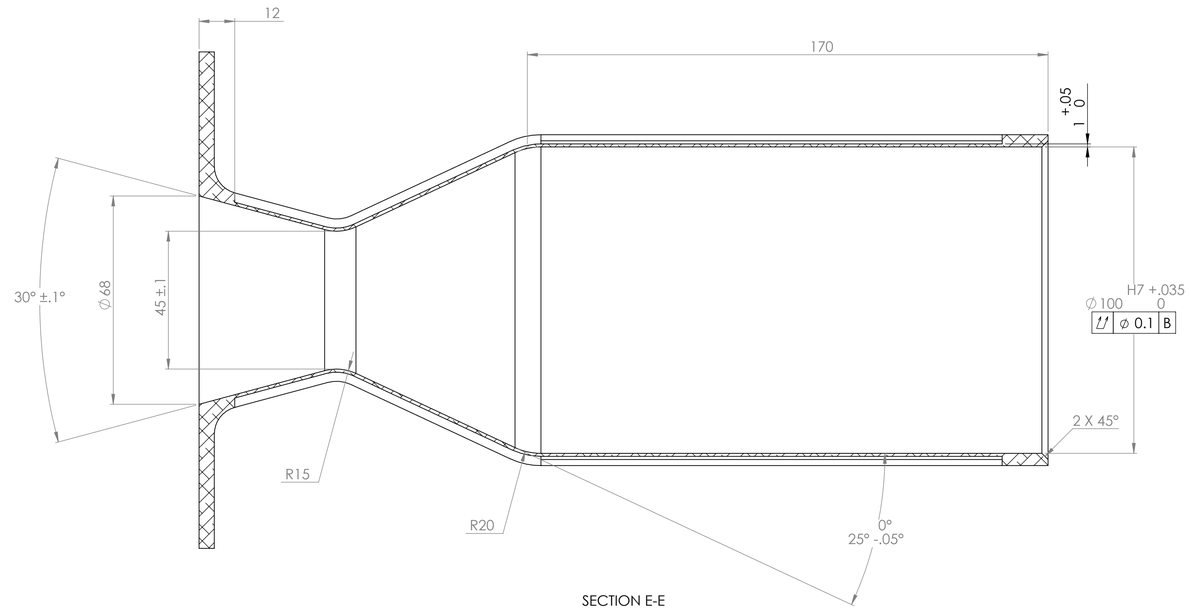

SECTION E-E

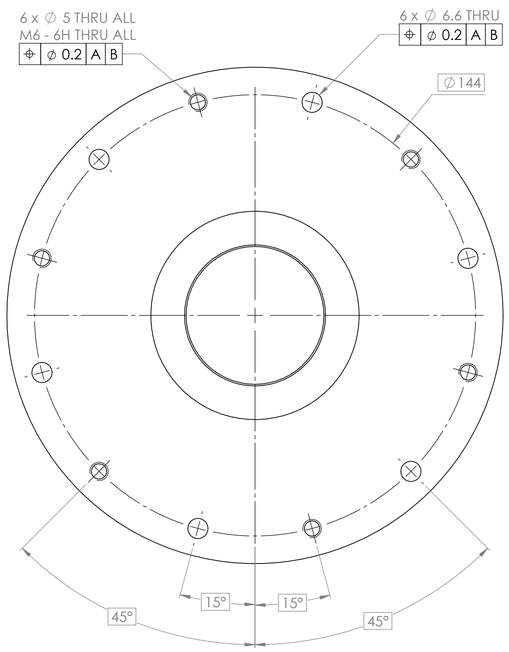

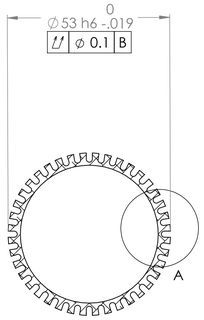

SECTION C-C

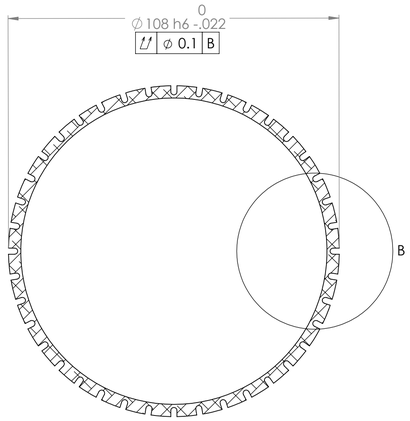

SECTION D-D

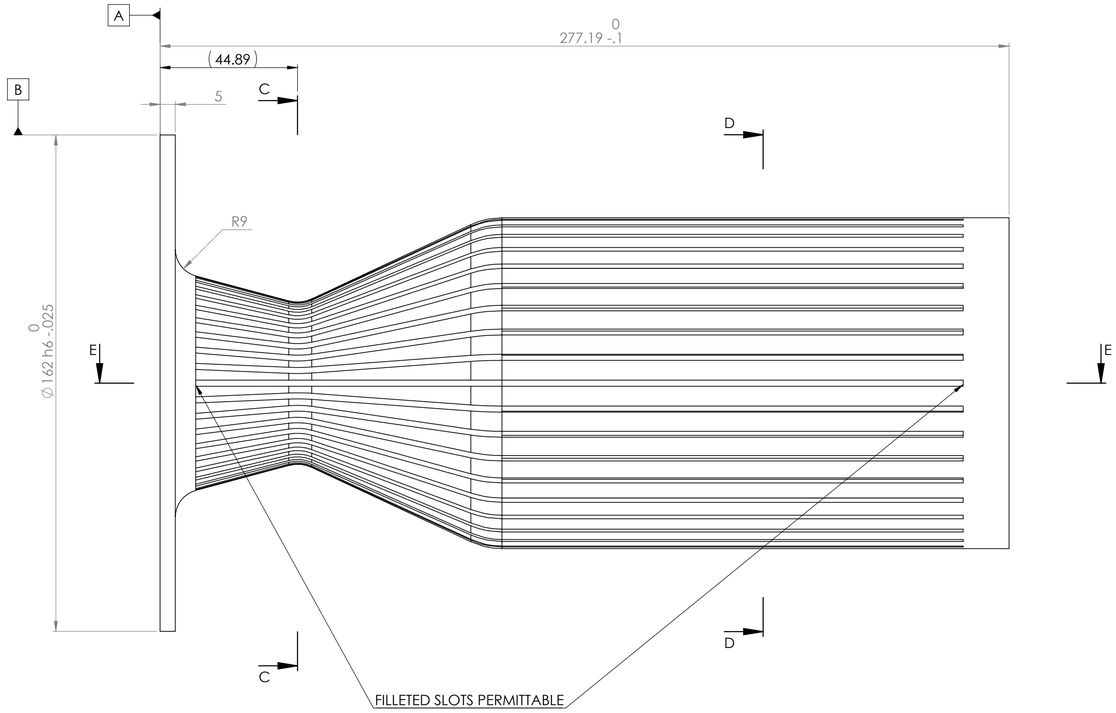

NOTE:
40 CHANNELS

DRAWING STANDARD BS 8888:2020	DRAWN BY TT	UNCONTROLLED IF PRINTED	LURA LEEDS UNIVERSITY ROCKET RESEARCH ASSOCIATION
TOLERANCE STANDARD ISO 2768-mk	DRAWN DATE 09/05/23	BREAK ALL SHARP EDGES	
UNSPECIFIED FINISHES Ra 1.6	SIGNOFF BY TT	MATERIAL 7049 ALLOY	ALL DIMENSIONS IN MM UNLESS STATED OTHERWISE
UNSPECIFIED THREADS BS 3643/2:1981 6H/6g	SIGNOFF DATE 09/05/23	DESCRIPTION MAIN CHAMBER	MASS (g) 978.3218 · SCALE 1:1 · SHEET 1 OF 1 · A1
		DRAWING # LP-0009	

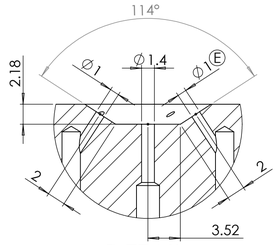

DETAIL O

SCALE 3 : 1

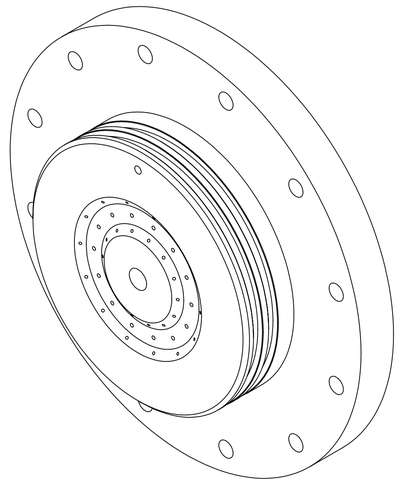

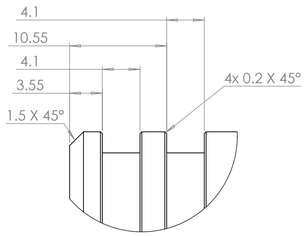

DETAIL B

SCALE 3 : 1

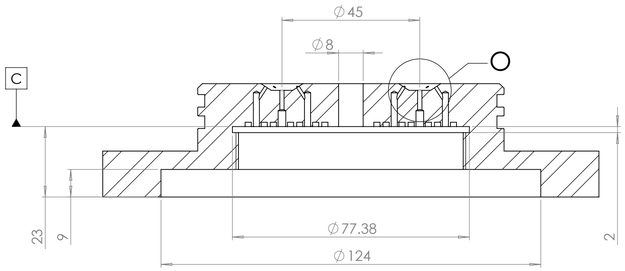

SECTION M-M

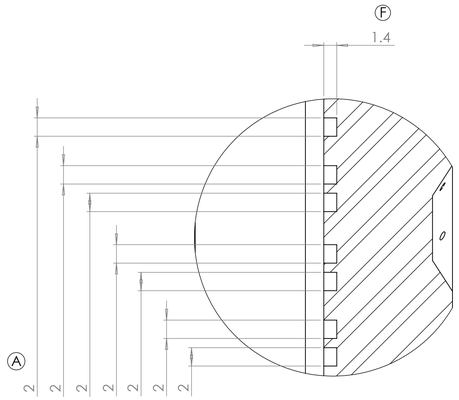

DETAIL S

SCALE 3 : 1

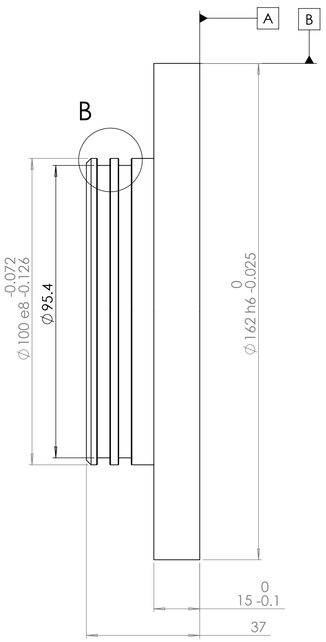

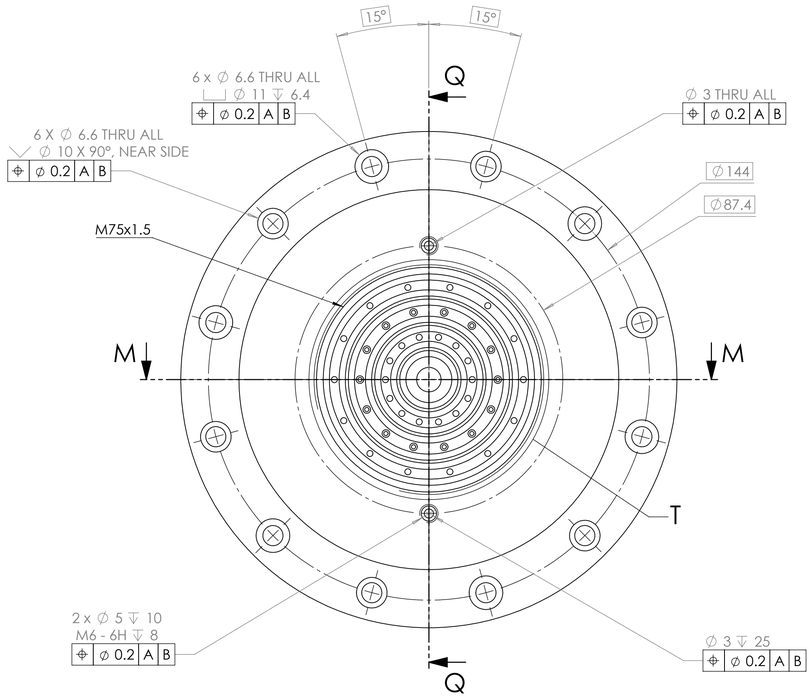

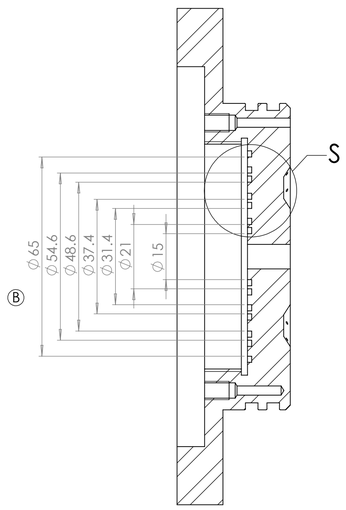

SECTION Q-Q

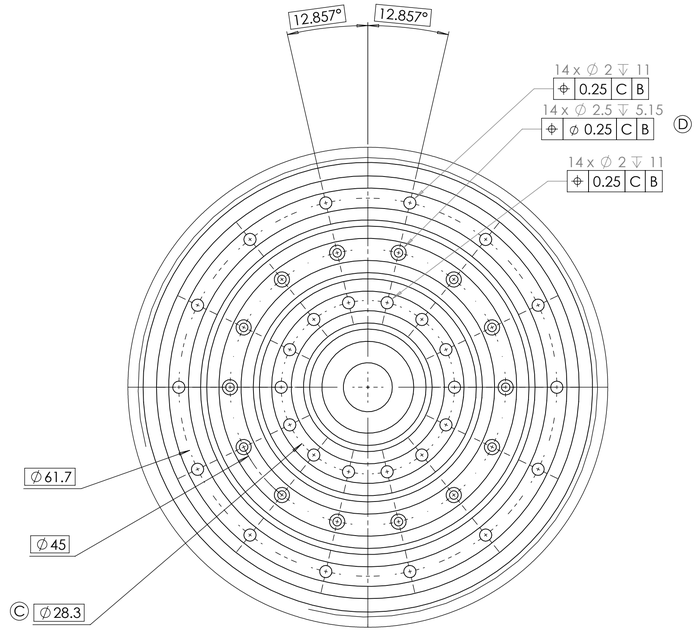

DETAIL T

SCALE 2 : 1

REVISION	DESCRIPTION	DATE	NAME	ZONE
A	CHANGED GROOVE WIDTH	25/05/23	KE	H8
B	CHANGED GROOVE LOCATIONS	25/05/23	KE	D7
C	CHANGED HOLE LOCATION	25/05/23	KE	C5
D	RELAXED TOLERANCES TO 0.25	25/05/23	KE	F1
E	CHANGED DIAMETER FROM 0.8 TO 1	25/05/23	KE	L10
F	CHANGED GROOVE DEPTH	25/05/23	KE	K6

DRAWING STANDARD: BS 8888:2020
TOLERANCE STANDARD: ISO 2768-mk
UNSPECIFIED FINISHES: Ra 1.6
UNSPECIFIED THREADS: BS 3643/2:1981 6H/6g

DRAWN BY: KE
DRAWN DATE: 08/05/23
SIGNOFF BY: TT
SIGNOFF DATE: 09/05/23

UNCONTROLLED IF PRINTED
BREAK ALL SHARP EDGES

MATERIAL: AISI 304
DESCRIPTION: INJECTOR PLATE
DRAWING #: LP-0007

LURA
LEEDS UNIVERSITY ROCKET RESEARCH ASSOCIATION

ALL DIMENSIONS IN MM UNLESS STATED OTHERWISE

MASS (g): 2316.9503
SCALE: 1:1
SHEET: 1 OF 1
A1

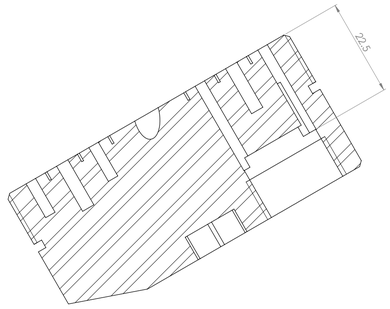

SECTION V-V

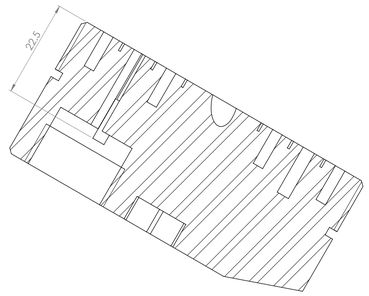

SECTION W-W

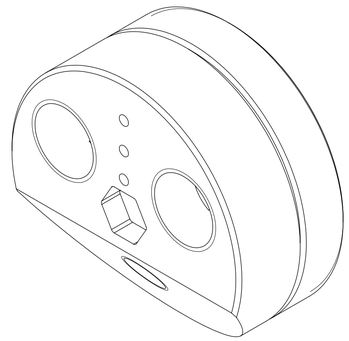

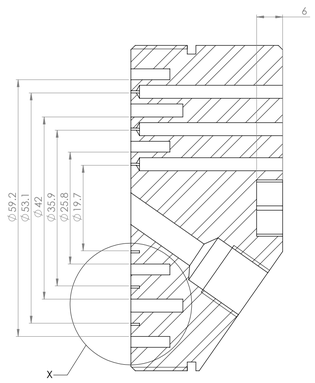

SECTION N-N

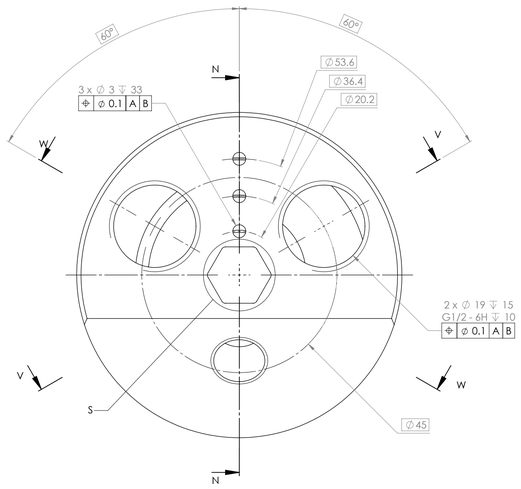

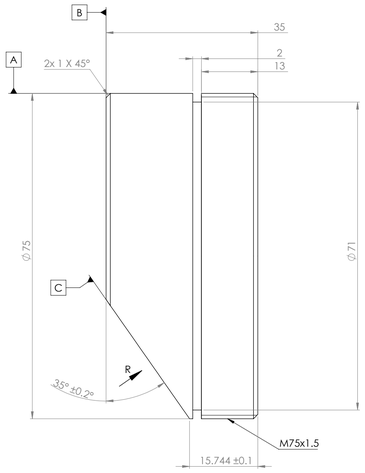

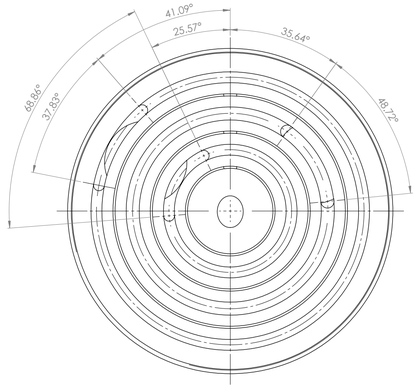

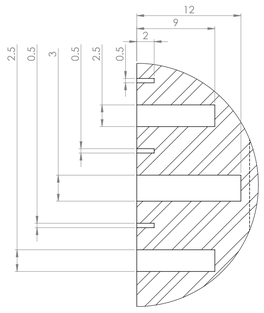

DETAIL X
SCALE 4 : 1

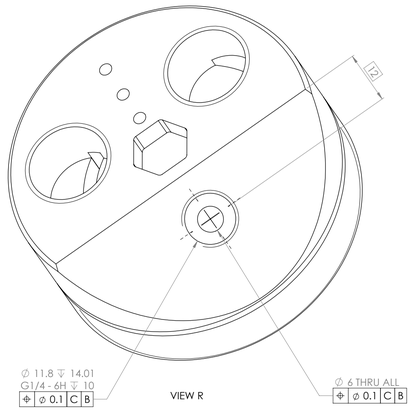

VIEW R

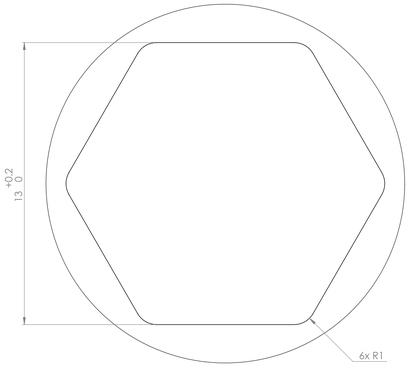

DETAIL S
SCALE 10 : 1

DRAWING STANDARD BS 8888:2020	DRAWN BY TT	UNCONTROLLED IF PRINTED	LURA LEEDS UNIVERSITY ROCKET & ASSOCIATION
TOLERANCE STANDARD ISO 2768-mk	DRAWN DATE 09/05/23	BREAK ALL SHARP EDGES	
UNSPECIFIED FINISHES Ra 1.6/	SIGNOFF BY TT	MATERIAL AISI 304	ALL DIMENSIONS IN MM UNLESS STATED OTHERWISE
UNSPECIFIED THREADS BS 3643/2:1981 6H/6g	SIGNOFF DATE 09/05/23	DESCRIPTION PROPELLANT MANIFOLD	MASS (g) 927.0454 · SCALE 2:1 · SHEET 1 OF 1 · A0
		DRAWING # LP-0010	

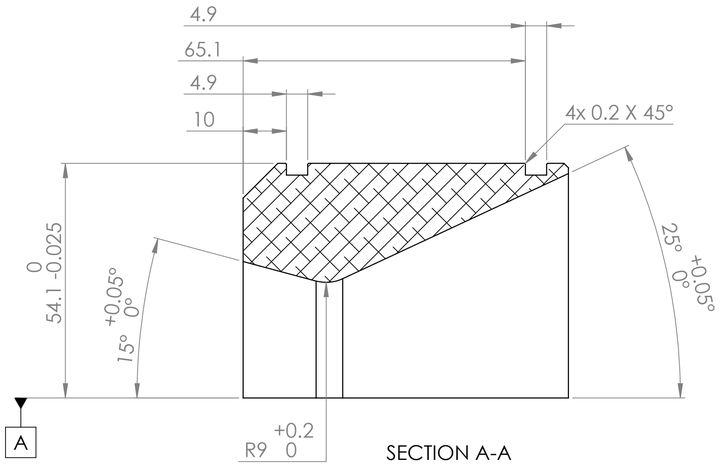

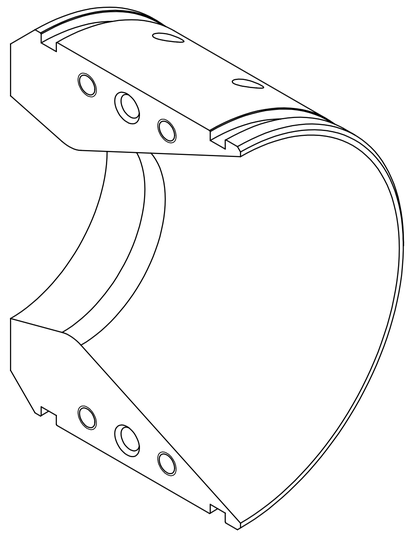

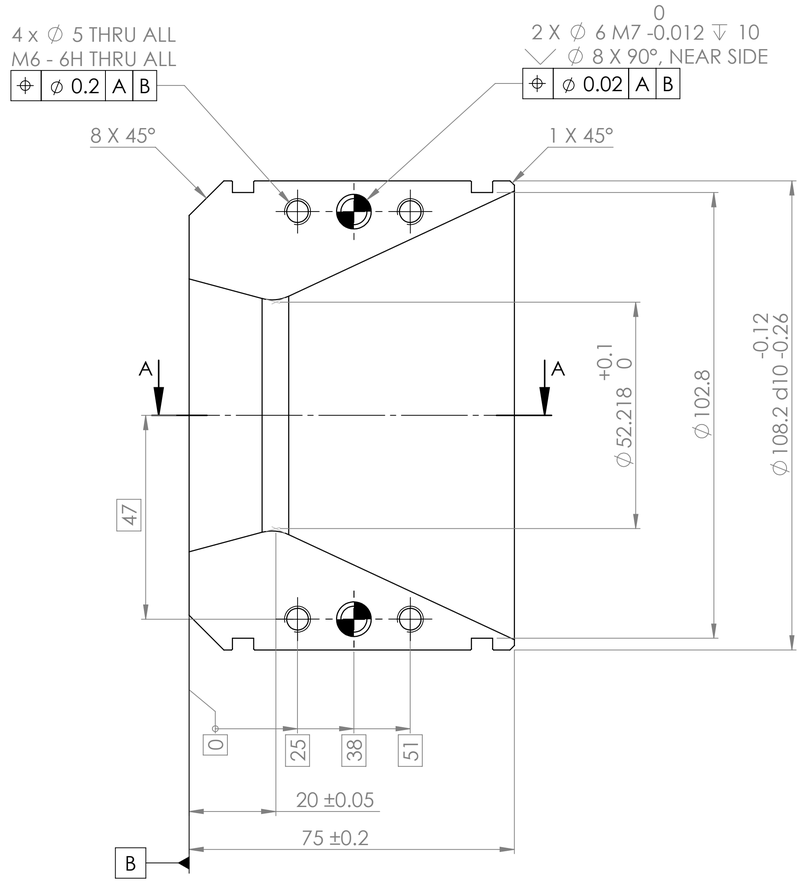

NOTE:
SUGGESTED MANUFACTURE WITH LP-0011 AND SPLIT PART WAY THROUGH

DRAWING STANDARD BS 8888:2020	DRAWN BY TT	**UNCONTROLLED IF PRINTED**	LURA LEEDS UNIVERSITY ROCKETRY ASSOCIATION
TOLERANCE STANDARD ISO 2768-mk	DRAWN DATE 09/05/23	BREAK ALL SHARP EDGES	
UNSPECIFIED FINISHES Ra 1.6	SIGNOFF BY TT	MATERIAL 6061 ALLOY	ALL DIMENSIONS IN MM UNLESS STATED OTHERWISE
UNSPECIFIED THREADS BS 3643/2:1981 6H/6g	SIGNOFF DATE 09/05/23	DESCRIPTION LOWER THROAT COLLAR	MASS (g) 460.4590 · SCALE 1:1 · SHEET 1 OF 1 · A2
		DRAWING # LP-0008	

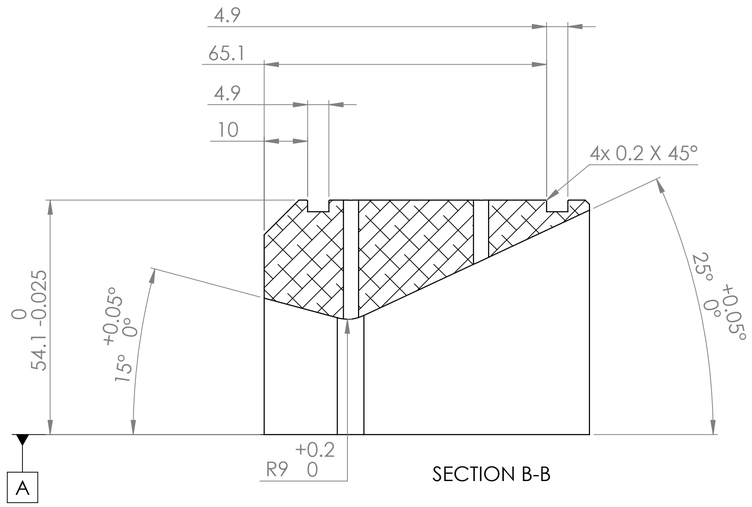

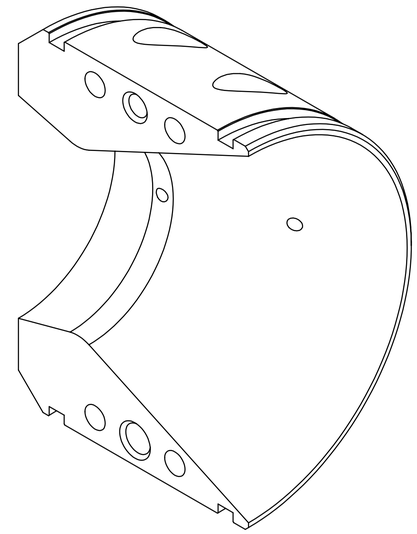

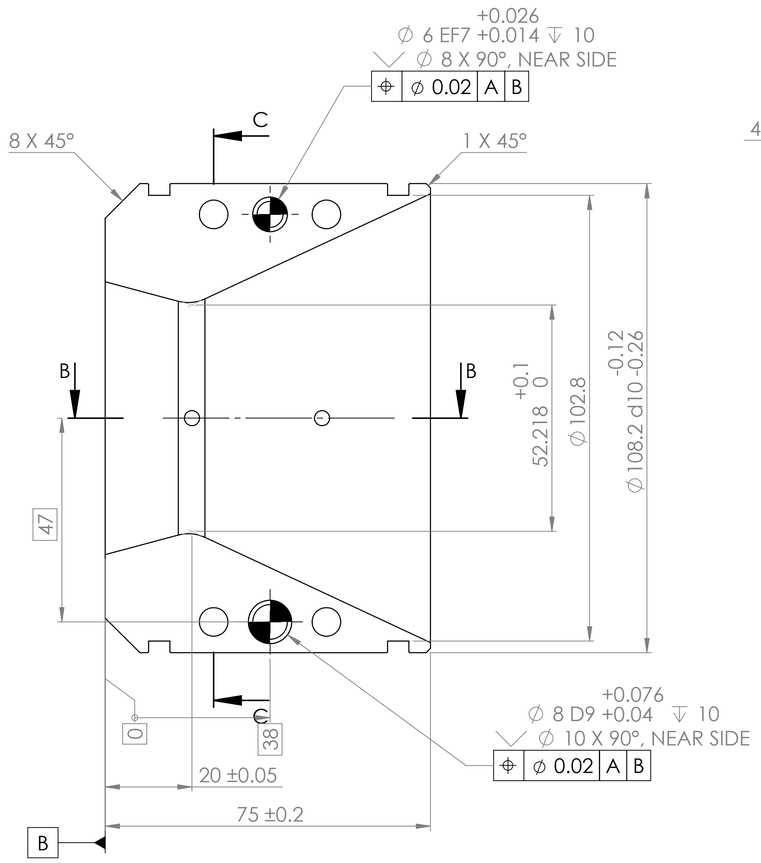

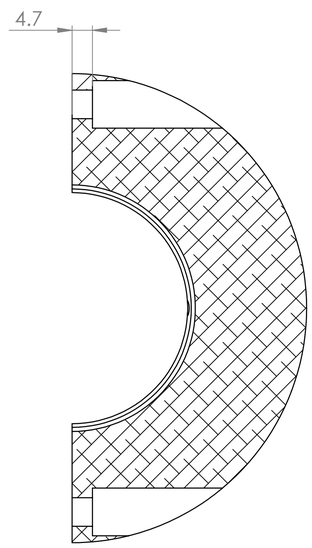

SECTION C-C

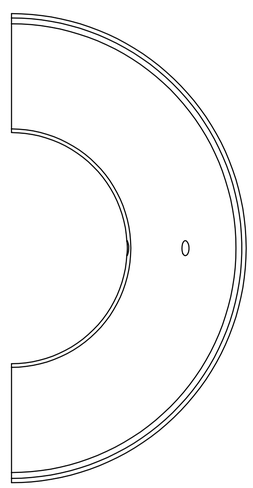

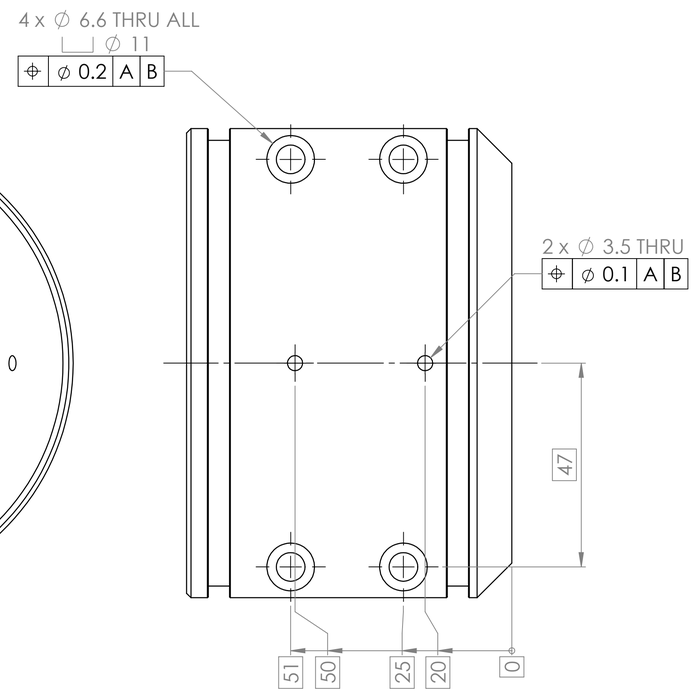

NOTE:
SUGGESTED MANUFACTURE WITH LP-0008 AND SPLIT PART WAY THROUGH

DRAWING STANDARD BS 8888:2020	DRAWN BY TT	**UNCONTROLLED IF PRINTED**	LURA LEEDS UNIVERSITY ROCKETRY ASSOCIATION
TOLERANCE STANDARD ISO 2768-mk	DRAWN DATE 09/05/23	BREAK ALL SHARP EDGES	ALL DIMENSIONS IN MM UNLESS STATED OTHERWISE
UNSPECIFIED FINISHES Ra 1.6	SIGNOFF BY TT	MATERIAL 6061 ALLOY	MASS (g) 440.6160 / SCALE 1:1 / SHEET 1 OF 1 / A2
UNSPECIFIED THREADS BS 3643/2:1981 6H/6g	SIGNOFF DATE 09/05/23	DESCRIPTION UPPER THROAT COLLAR	
		DRAWING # LP-0011	

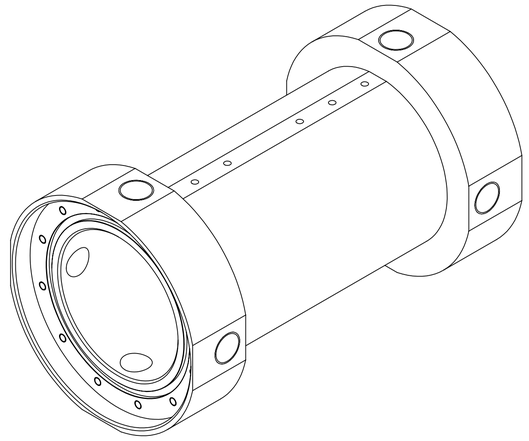

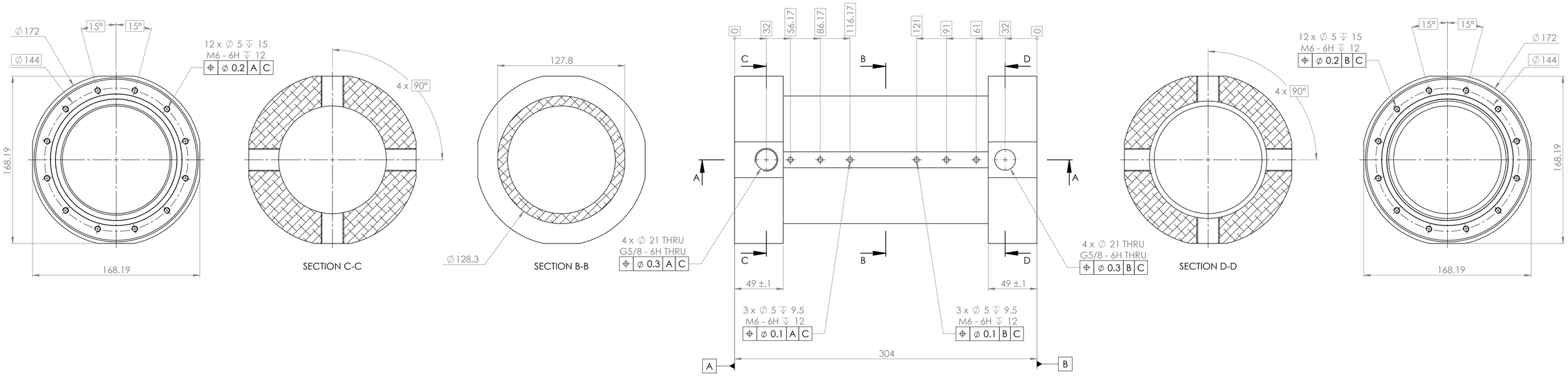

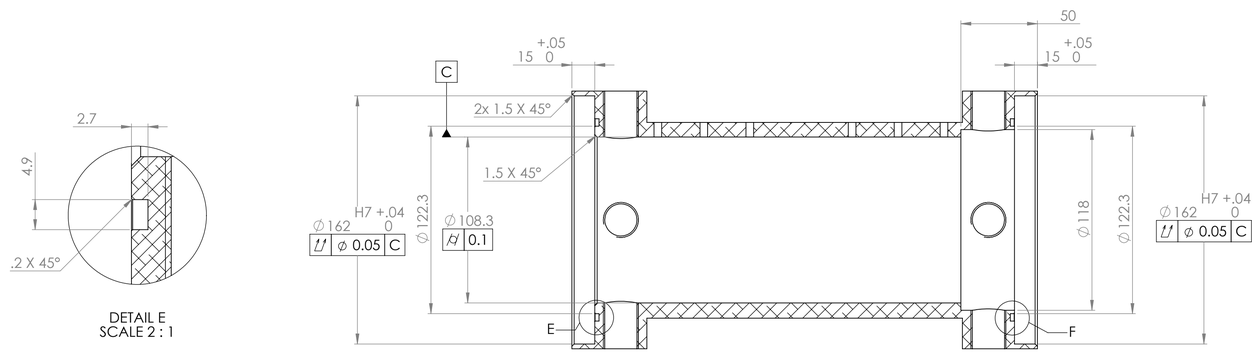

SECTION A-A

DETAIL E
SCALE 2 : 1

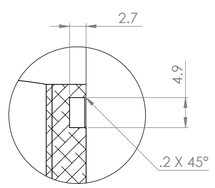

DETAIL F
SCALE 2 : 1

DRAWING STANDARD BS 8888:2020	DRAWN BY TT	**UNCONTROLLED IF PRINTED**	LURA LEEDS UNIVERSITY ROCKET RYSSOCIATION
TOLERANCE STANDARD ISO 2768-mk	DRAWN DATE 09/05/23	BREAK ALL SHARP EDGES	
UNSPECIFIED FINISHES Ra 1.6	SIGNOFF BY TT	MATERIAL 6061 ALLOY	ALL DIMENSIONS IN MM UNLESS STATED OTHERWISE
UNSPECIFIED THREADS BS 3643/2:1981 6H/6g	SIGNOFF DATE 09/05/23	DESCRIPTION COOLING JACKET	MASS (g) 4376.6026 · SCALE 1:2 · SHEET 1 OF 1 · A1
		DRAWING # LP-0002	

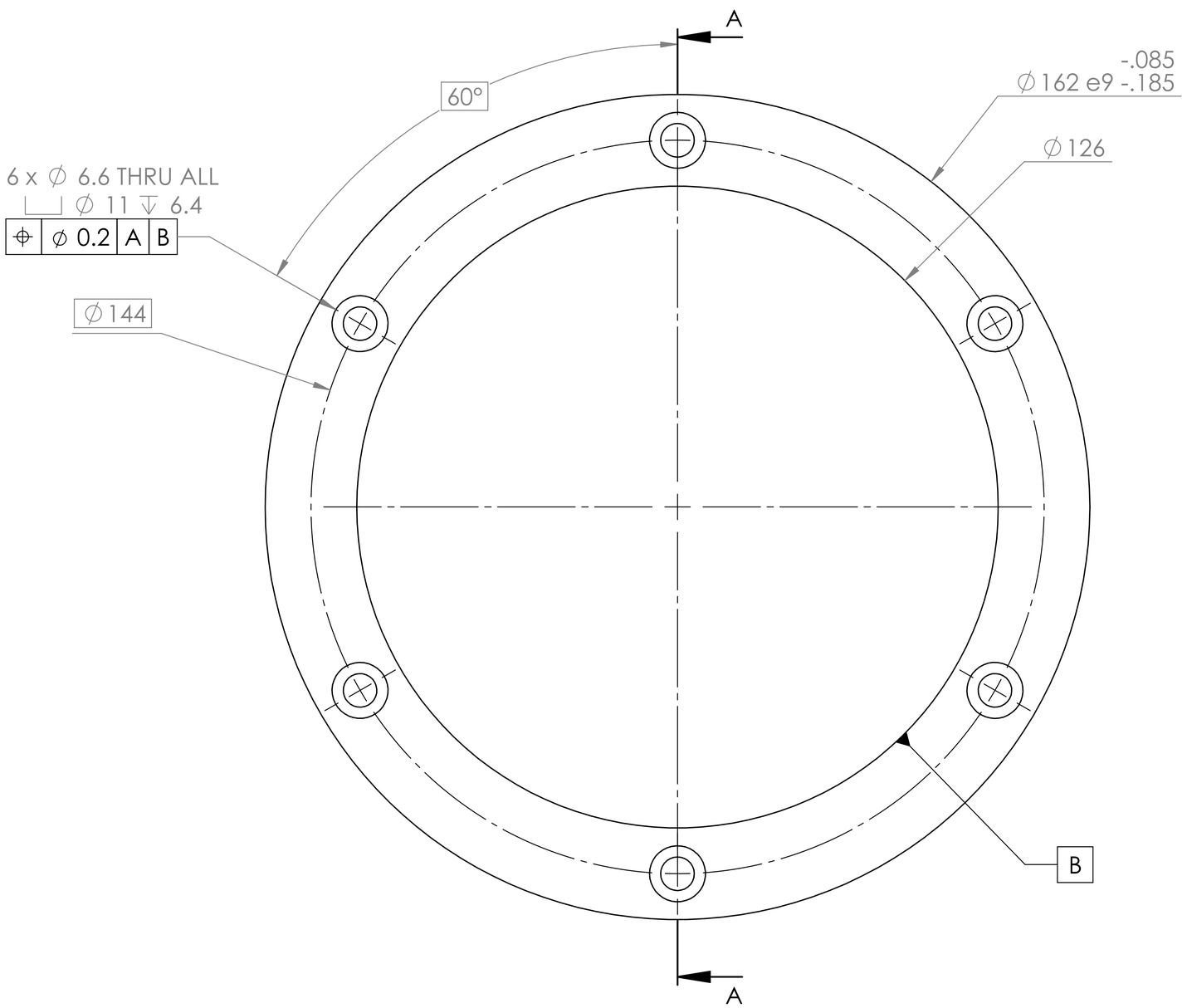

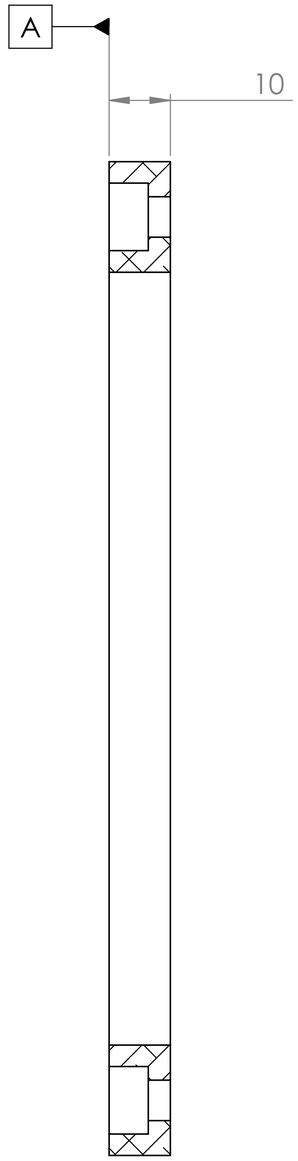

SECTION A-A

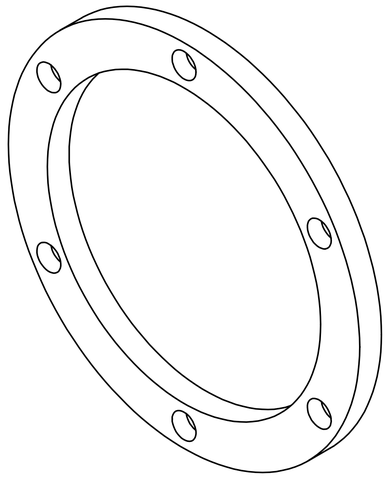

SCALE 1 : 2

DRAWING STANDARD BS 8888:2020	DRAWN BY KE	**UNCONTROLLED IF PRINTED**	LURA LEEDS UNIVERSITY ROCKETRY ASSOCIATION
TOLERANCE STANDARD ISO 2768-mk	DRAWN DATE 20/04/23	BREAK ALL SHARP EDGES MATERIAL 6061 ALLOY	ALL DIMENSIONS IN MM UNLESS STATED OTHERWISE
UNSPECIFIED FINISHES Ra 1.6	SIGNOFF BY TT	DESCRIPTION CHAMBER RETAINING PLATE	MASS (g) 208.0129 · SCALE 1:1 · SHEET 1 OF 1 · A3
UNSPECIFIED THREADS BS 3643/2:1981 6H/6g	SIGNOFF DATE 09/05/23	DRAWING # LP-0001	

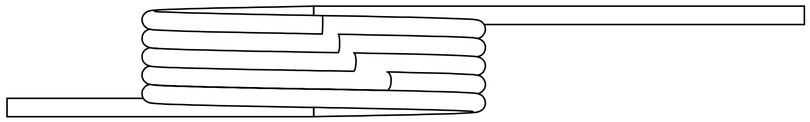

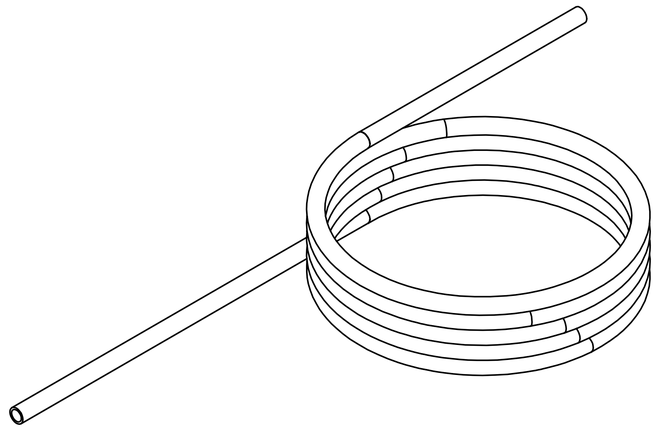

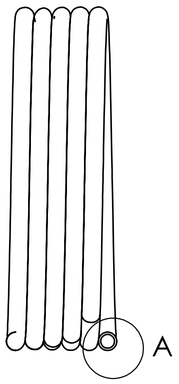

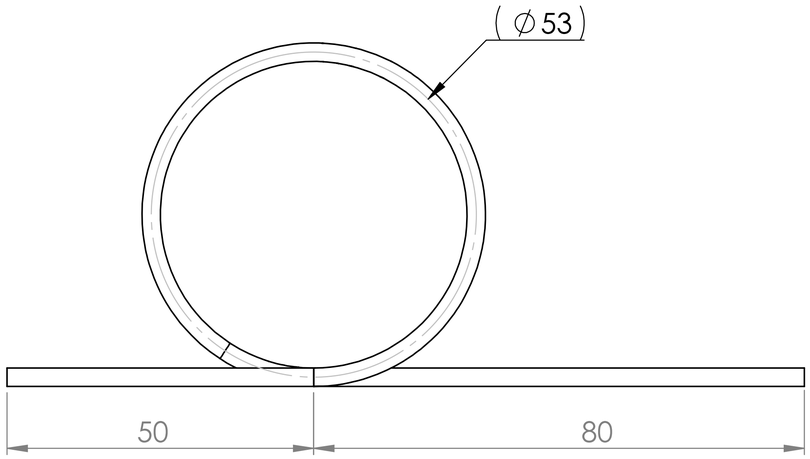

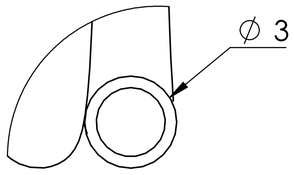

DETAIL A
SCALE 5 : 1

DRAWING STANDARD BS 8888:2020	DRAWN BY TT	**UNCONTROLLED IF PRINTED**	LURA LEEDS UNIVERSITY ROCKETRY ASSOCIATION
TOLERANCE STANDARD ISO 2768-mk	DRAWN DATE 24/04/23	BREAK ALL SHARP EDGES	ALL DIMENSIONS IN MM UNLESS STATED OTHERWISE
UNSPECIFIED FINISHES Ra 1.6	SIGNOFF BY TT	MATERIAL COPPER	MASS (g) 25.70 / SCALE 1:1 / SHEET 1 OF 1 / A3
UNSPECIFIED THREADS BS 3643/2:1981 6H/6g	SIGNOFF DATE 09/05/23	DESCRIPTION COPPER COIL	
		DRAWING # LP-0003	

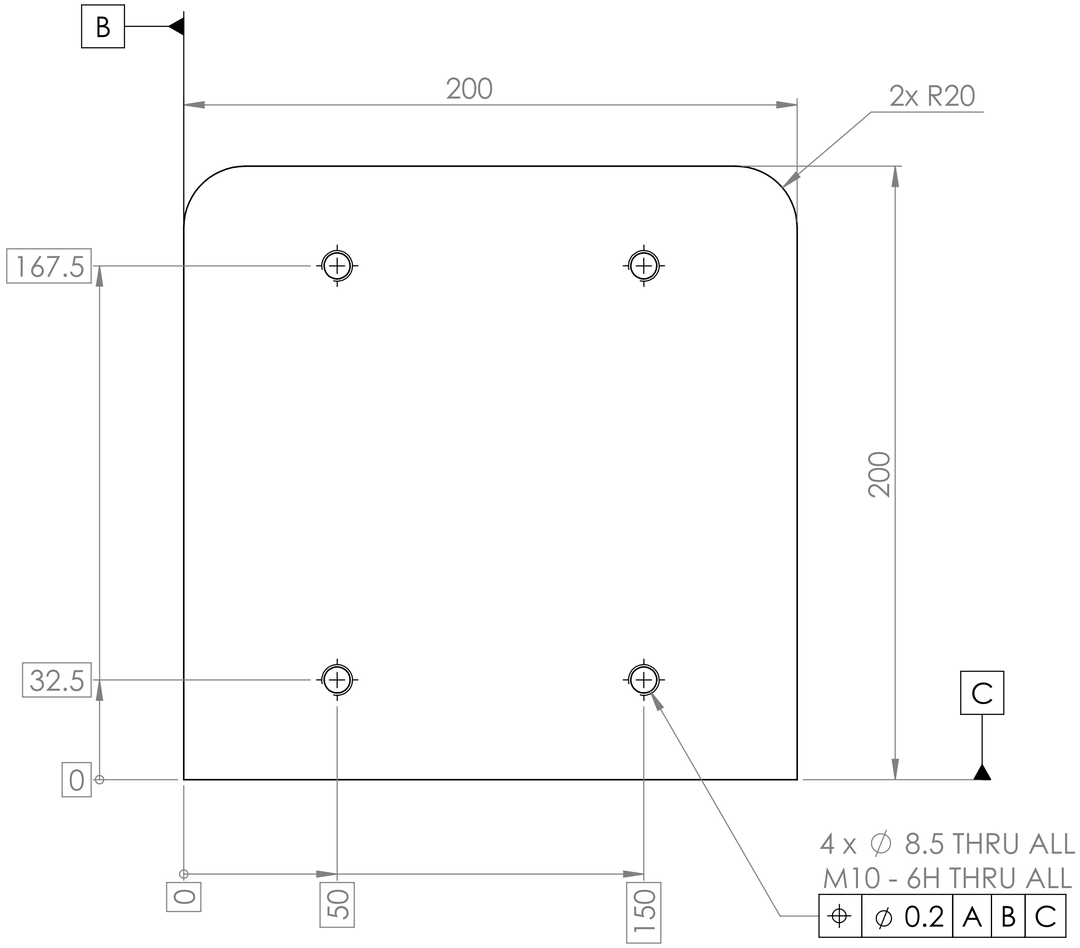

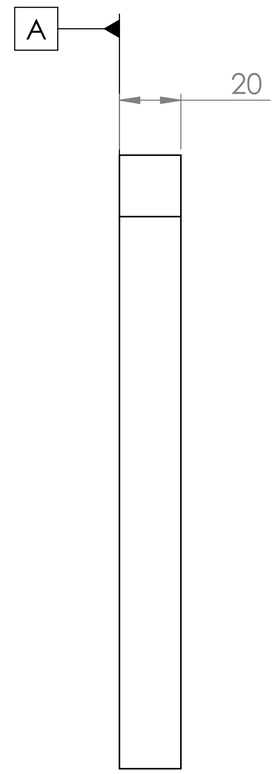

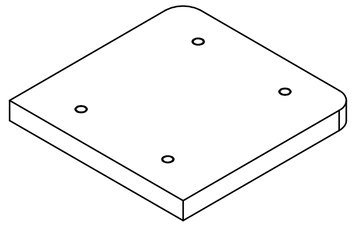

SCALE 1 : 5

DRAWING STANDARD BS 8888:2020	DRAWN BY KE	**UNCONTROLLED IF PRINTED**	LURA LEEDS UNIVERSITY ROCKETRY ASSOCIATION
TOLERANCE STANDARD ISO 2768-mk	DRAWN DATE 20/04/23	BREAK ALL SHARP EDGES MATERIAL PLAIN CARBON STEEL	ALL DIMENSIONS IN MM UNLESS STATED OTHERWISE
UNSPECIFIED FINISHES Ra 1.6	SIGNOFF BY TT	DESCRIPTION ENGINE MOUNT BASE	MASS (g) 6177.8088 / SCALE 1:2 / SHEET 1 OF 1 / A3
UNSPECIFIED THREADS BS 3643/2:1981 6H/6g	SIGNOFF DATE 09/05/23	DRAWING # LP-0004	

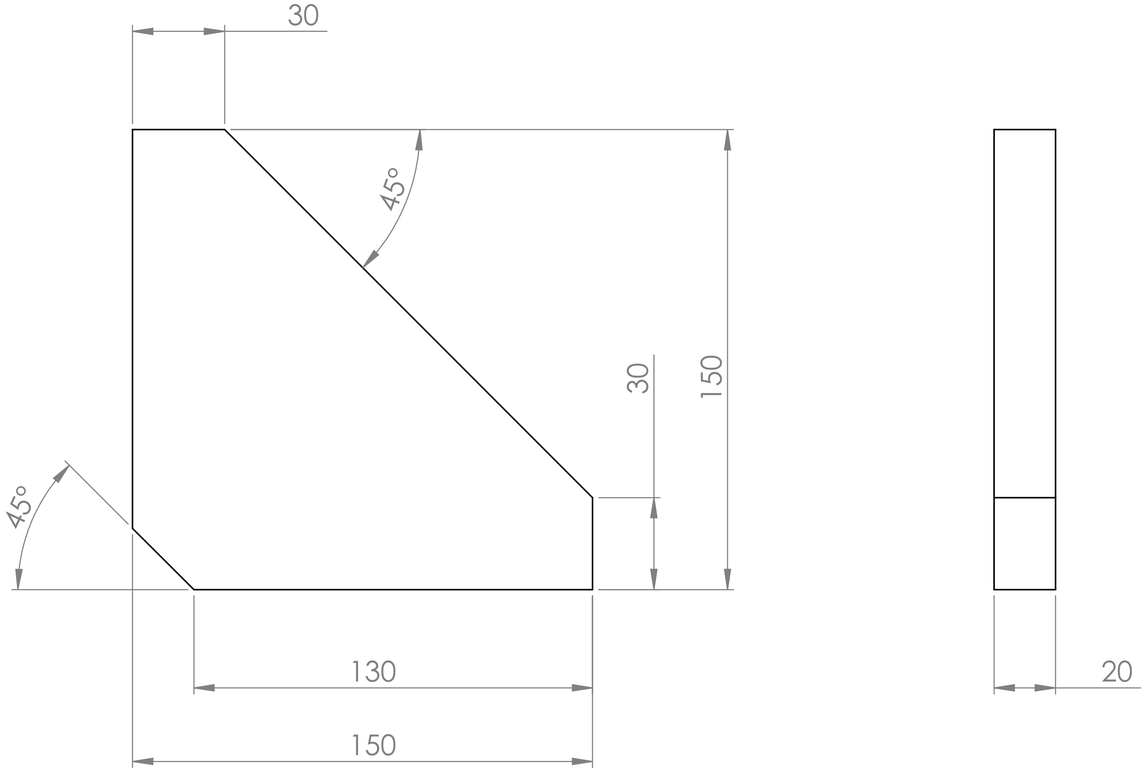

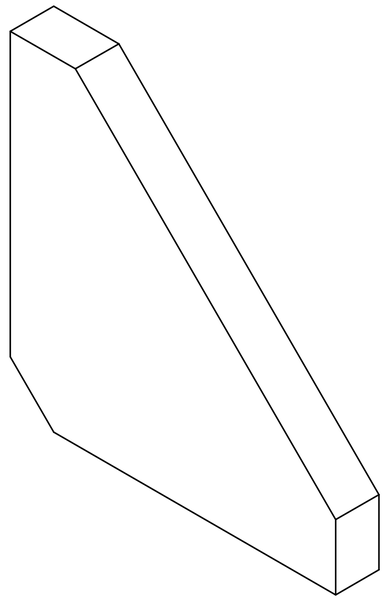

DRAWING STANDARD BS 8888:2020	DRAWN BY KE	**UNCONTROLLED IF PRINTED**	LURA LEEDS UNIVERSITY ROCKETRY ASSOCIATION
TOLERANCE STANDARD ISO 2768-mk	DRAWN DATE 20/04/23	BREAK ALL SHARP EDGES MATERIAL PLAIN CARBON STEEL	ALL DIMENSIONS IN MM UNLESS STATED OTHERWISE
UNSPECIFIED FINISHES Ra 1.6	SIGNOFF BY TT	DESCRIPTION ENGINE MOUNT BRACE	MASS (g) 2355.6000 / SCALE 1:2 / SHEET 1 OF 1 / A3
UNSPECIFIED THREADS BS 3643/2:1981 6H/6g	SIGNOFF DATE 09/05/23	DRAWING # LP-0005	

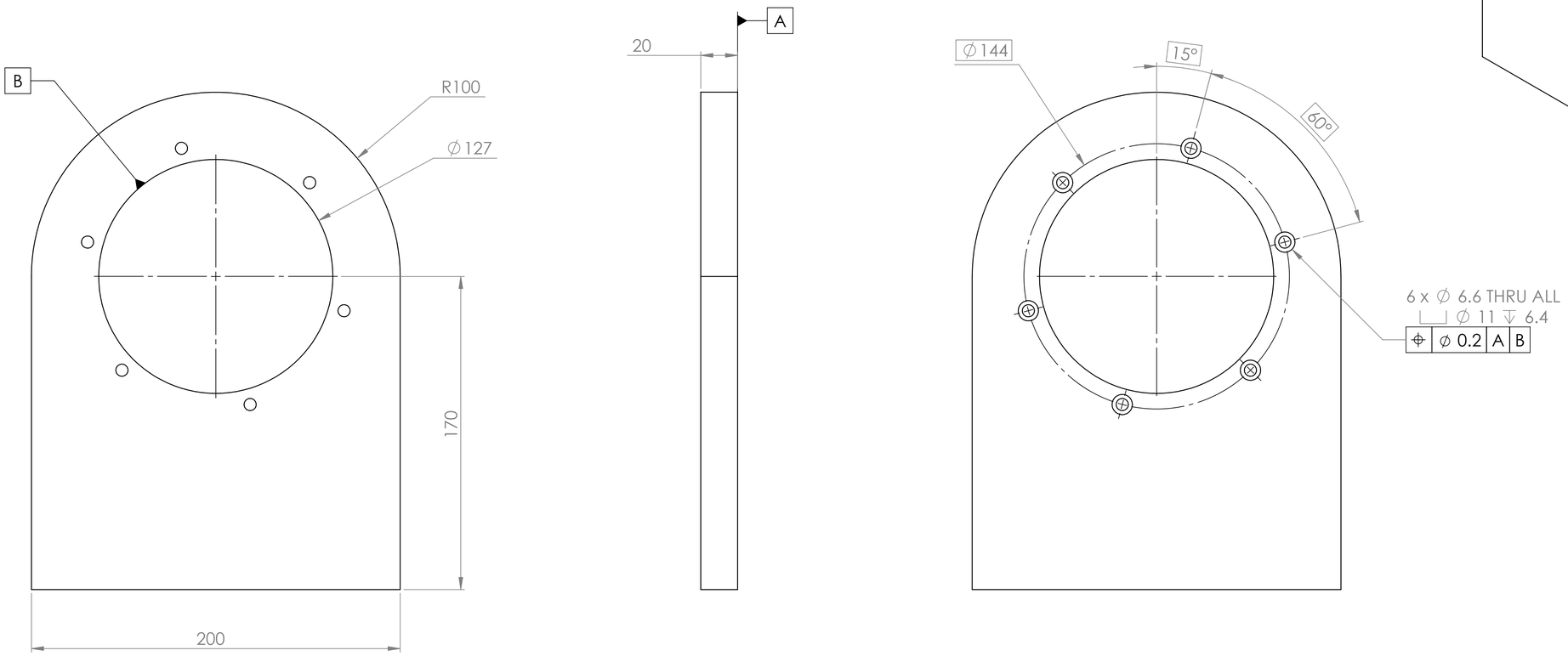

DRAWING STANDARD BS 8888:2020	DRAWN BY KE	**UNCONTROLLED IF PRINTED**	LURA LEEDS UNIVERSITY ROCKETRY ASSOCIATION
TOLERANCE STANDARD ISO 2768-mk	DRAWN DATE 20/04/23	BREAK ALL SHARP EDGES	ALL DIMENSIONS IN MM UNLESS STATED OTHERWISE
UNSPECIFIED FINISHES Ra 1.6	SIGNOFF BY TT	MATERIAL PLAIN CARBON STEEL	MASS (g) 5728.0435 · SCALE 1:2 · SHEET 1 OF 1 · A2
UNSPECIFIED THREADS BS 3643/2:1981 6H/6g	SIGNOFF DATE 09/05/23	DESCRIPTION ENGINE MOUNT INTERFACE PLATE	
		DRAWING # LP-0006	

ITEM NO.	PART NUMBER	DESCRIPTION	QTY.
1	36240.W0242	WIXROYD 36240.W0242	1
2	LP-0008	Lower Throat Collar	1
3	ACCU-HDP-6-14-A1		1

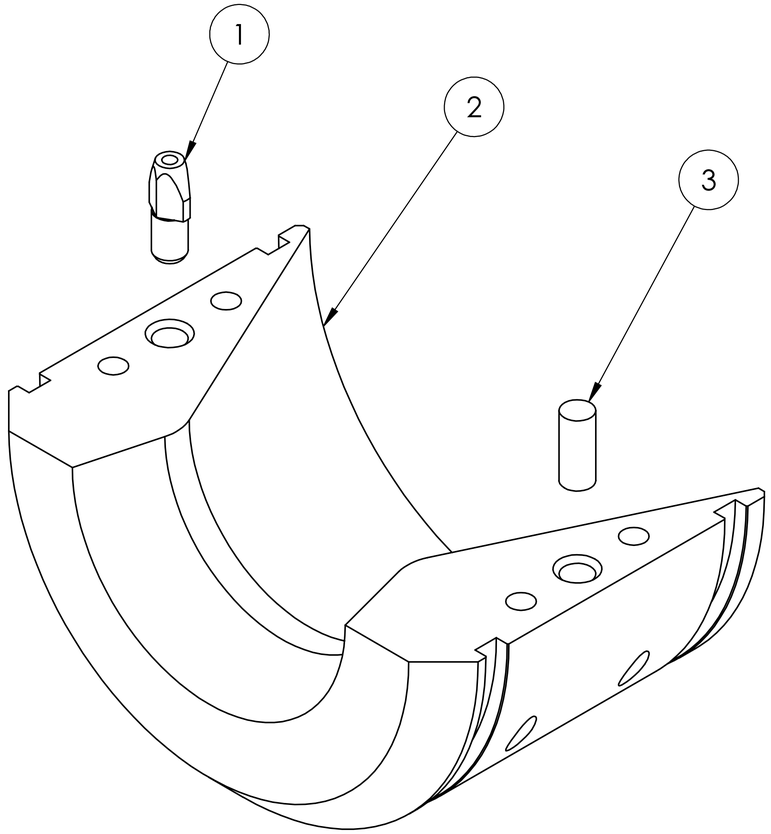

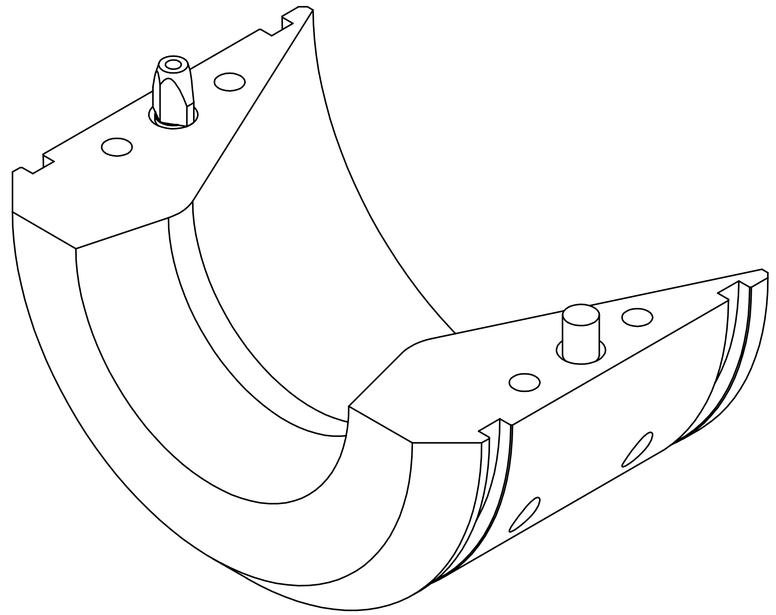

DRAWING STANDARD BS 8888:2020	DRAWN BY TT	**UNCONTROLLED IF PRINTED**	LURA LEEDS UNIVERSITY ROCKETRY ASSOCIATION
TOLERANCE STANDARD ISO 2768-mk	DRAWN DATE 24/04/23	BREAK ALL SHARP EDGES	ALL DIMENSIONS IN MM UNLESS STATED OTHERWISE
UNSPECIFIED FINISHES Ra 1.6	SIGNOFF BY TT	MATERIAL N/A	
UNSPECIFIED THREADS BS 3643/2:1981 6H/6g	SIGNOFF DATE 13/06/23	DESCRIPTION LOWER THROAT COLLAR ASSEMBLY	MASS (g) 467.19
		DRAWING # LA-0008	SCALE 1:1 · SHEET 1 OF 1 · A3

ITEM NO.	PART NUMBER	DESCRIPTION	QTY.
1	LP-0009	MAIN CHAMBER	1
2	LA-0008	LOWER THROAT COLLAR ASSEMBLY	1
3	LP-0011	UPPER THROAT COLLAR	1
4	EASTERNSEALS-BS241V575		2
5	SSCF-M6-16-A2		4
6	BRITLUBE-BL-15502		1

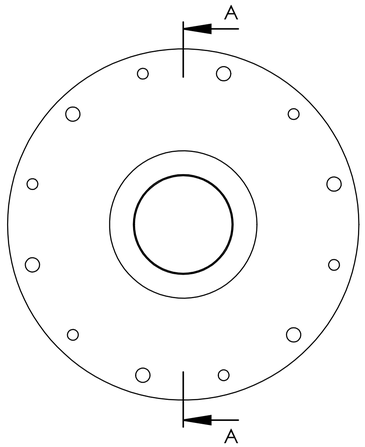

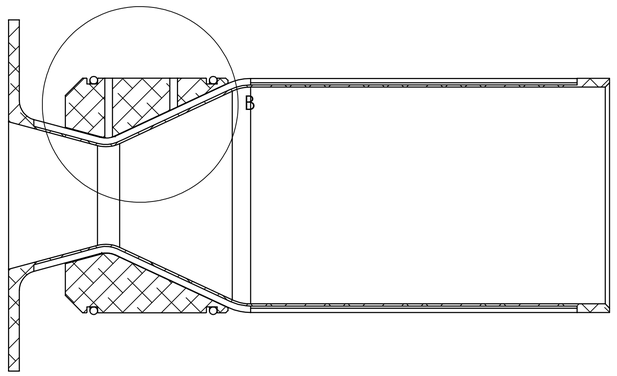

SECTION A-A

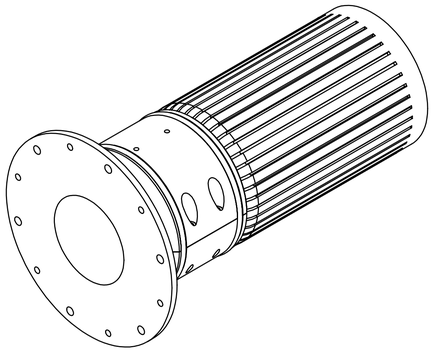

SCALE 1 : 3

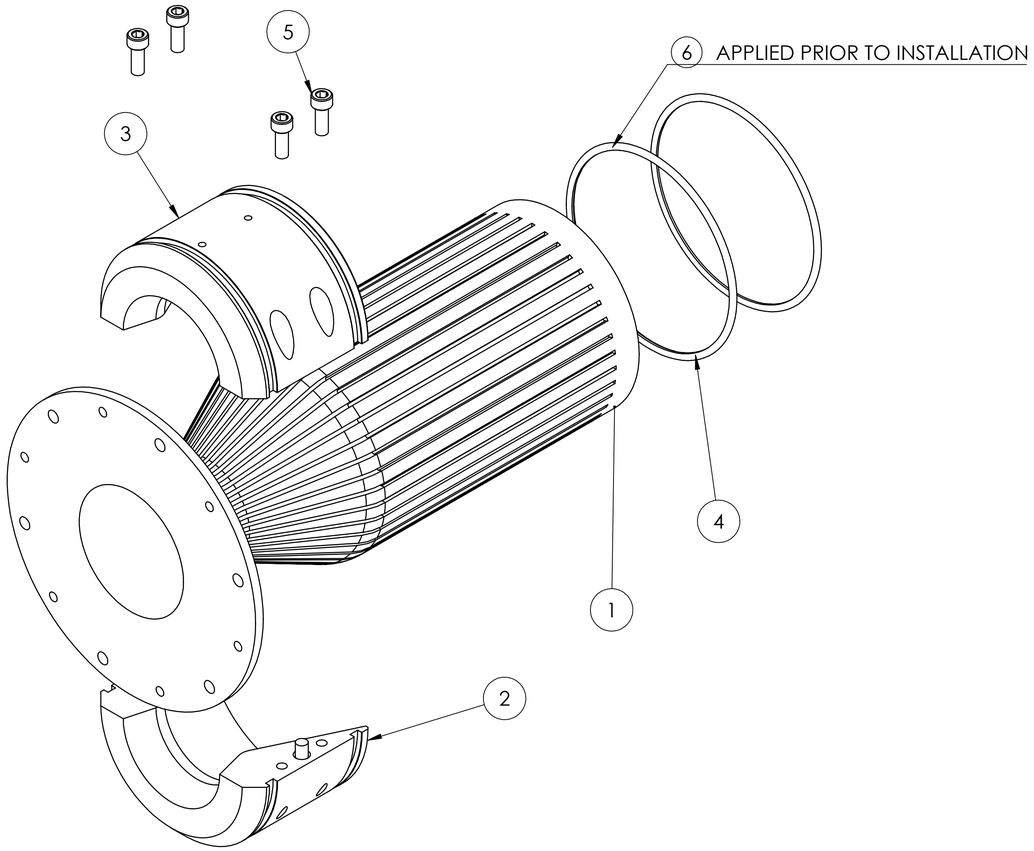

USE ADDITIONAL DOWEL PIN TO ENSURE THROUGH HOLES ALIGN WITH 1ST COOLING CHANNEL

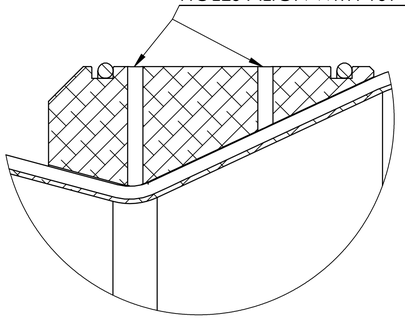

DETAIL B
SCALE 1 : 1

DRAWING STANDARD BS 8888:2020	DRAWN BY TT	**UNCONTROLLED IF PRINTED**	LURA LEEDS UNIVERSITY ROCKETRY ASSOCIATION
TOLERANCE STANDARD ISO 2768-mk	DRAWN DATE 24/04/23	BREAK ALL SHARP EDGES	
UNSPECIFIED FINISHES Ra 1.6	SIGNOFF BY --	MATERIAL N/A	ALL DIMENSIONS IN MM UNLESS STATED OTHERWISE
UNSPECIFIED THREADS BS 3643/2:1981 6H/6g	SIGNOFF DATE --	DESCRIPTION COLLARED CHAMBER ASSEMBLY	
		DRAWING # LA-0004	MASS (g) 1925.23 / SCALE 1:2 / SHEET 1 OF 1 / A2

ITEM NO.	PART NUMBER	DESCRIPTION	QTY.
1	LP-0002	COOLING JACKET	1
2	LA-0004	COLLARED CHAMBER ASSEMBLY	1
3	LP-0001	CHAMBER RETAINING PLATE	1
4	EASTERNSEALS-BS247V575		1
5	SSCF-M6-25-A2		6
6	BRITLUBE-BL-15502		1

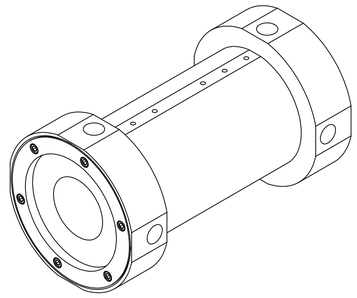

SCALE 1 : 3

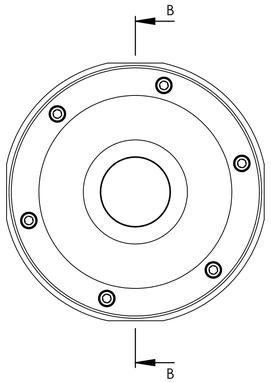

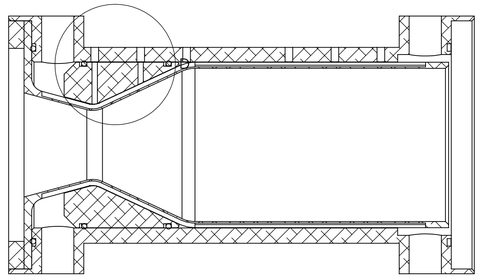

SECTION B-B

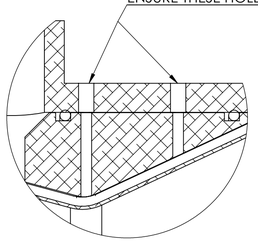

DETAIL D
SCALE 1 : 1

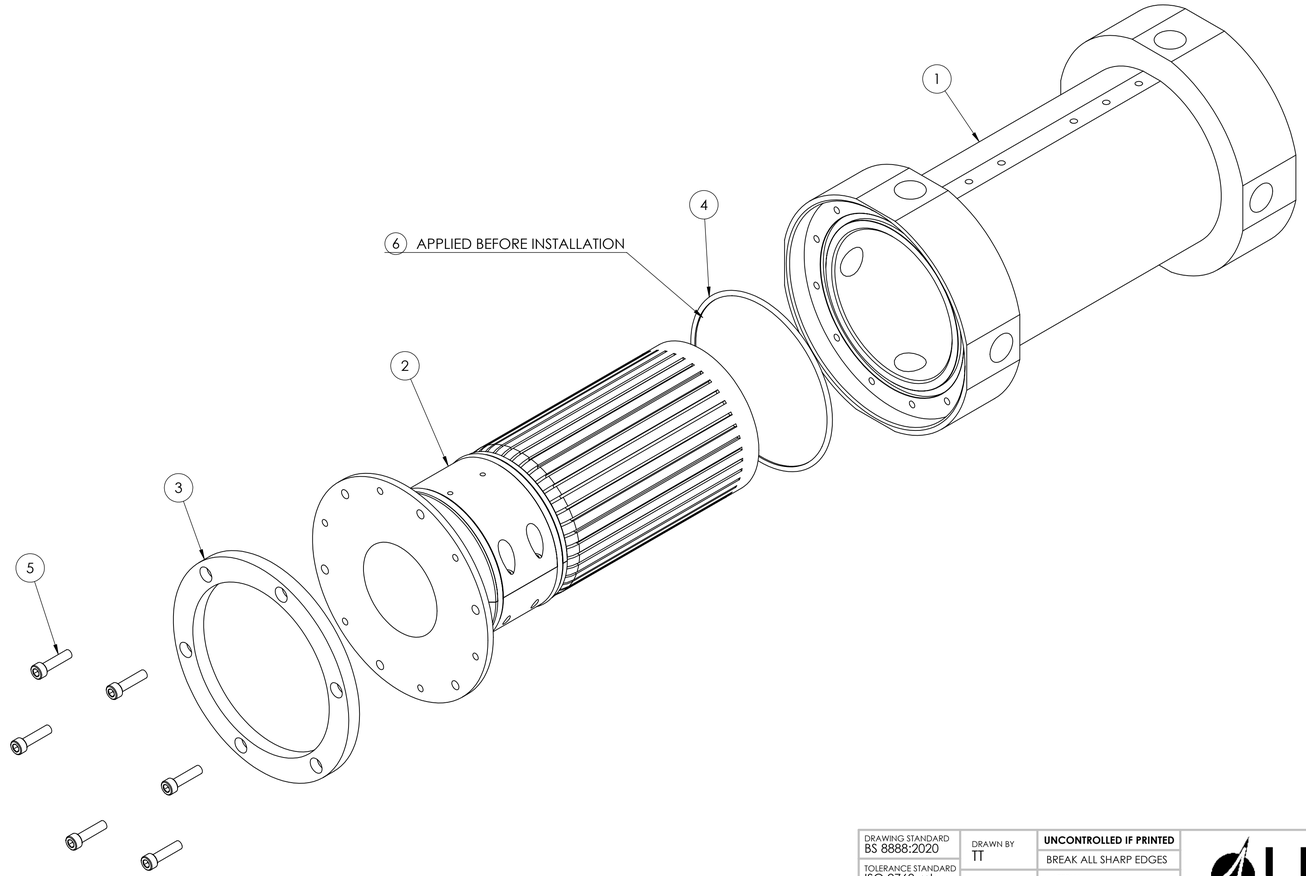

DRAWING STANDARD BS 8888:2020	DRAWN BY TT	UNCONTROLLED IF PRINTED	LURA LEEDS UNIVERSITY ROCKET RESEARCH ASSOCIATION
TOLERANCE STANDARD ISO 2768-mk	DRAWN DATE 24/04/23	BREAK ALL SHARP EDGES	
UNSPECIFIED FINISHES Ra 1.6	SIGNOFF BY TT	MATERIAL N/A	ALL DIMENSIONS IN MM UNLESS STATED OTHERWISE
UNSPECIFIED THREADS BS 3643/2:1981 6H/6g	SIGNOFF DATE 13/06/23	DESCRIPTION JACKETED CHAMBER ASSEMBLY	
		DRAWING # LA-0007	MASS (g) 6569.30 · SCALE 1:2 · SHEET 1 OF 1 · A1

ITEM NO.	PART NUMBER	DESCRIPTION	QTY.
1	LP-0007	INJECTOR PLATE	1
2	LP-0010	Propellant Manifold	1
3	EASTERNSEALS-94.5X3V575		2
4	RS 136-5035		1
5	RS 458-3953		2
6	RSPRO-342-9088		1
7	EASTERNSEALS-BS037PTFE		1
8	EASTERNSEALS-BS034PTFE		1
9	EASTERNSEALS-BS032PTFE		1
10	EASTERNSEALS-BS028PTFE		1
11	EASTERNSEALS-BS025PTFE		1
12	EASTERNSEALS-BS019PTFE		1
13	BRITLUBE-BL-15502		1
14	LP-0003	COPPER COIL	1
15	RS 497-971		1
16	RSPRO-381-7362		1
17	EASTERNSEALS-BS015PTFE		1
18	RS 449-3451		1
19	EASTERNSEALS-BON-025-9775-41(2.50)		2

(13) APPLIED PRIOR TO INSTALLING THESE O-RINGS

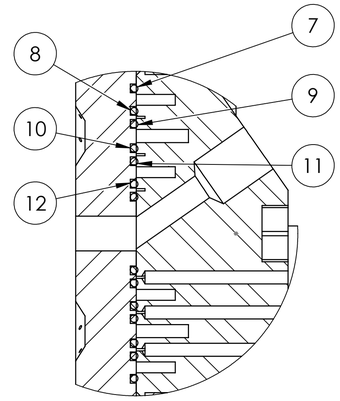

DETAIL B
SCALE 1 : 1

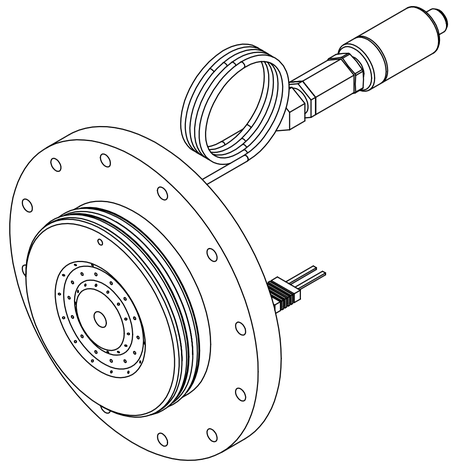

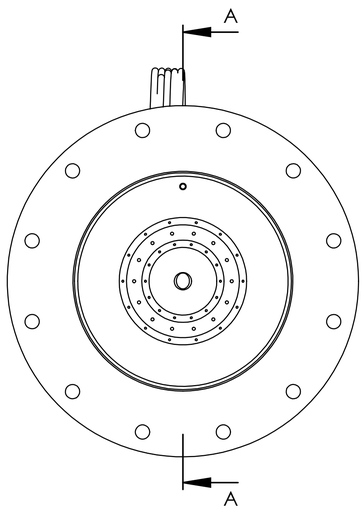

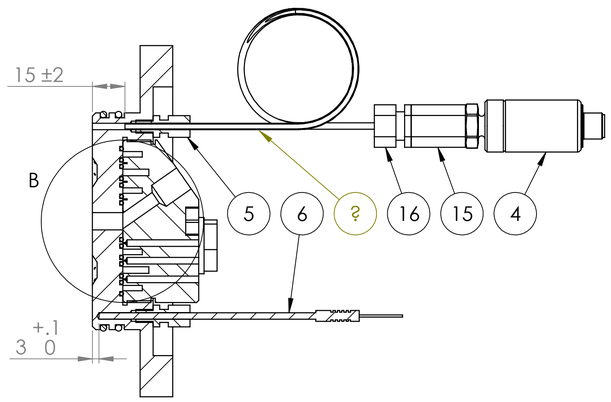

SECTION A-A

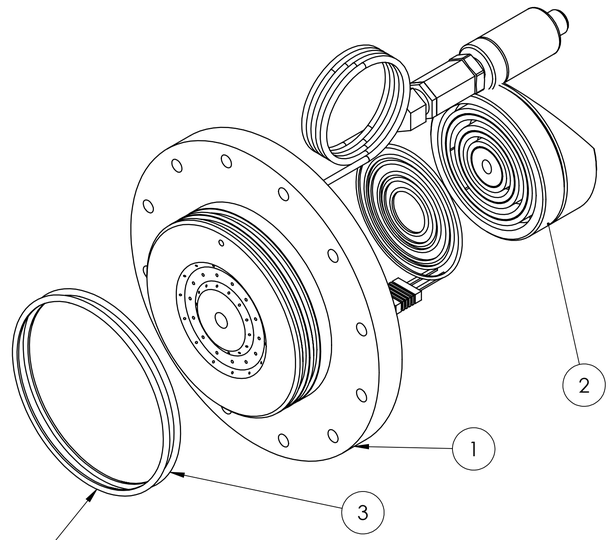

(13) APPLIED PRIOR TO INSTALLATION

DRAWING STANDARD BS 8888:2020	DRAWN BY TT	**UNCONTROLLED IF PRINTED**	LURA LEEDS UNIVERSITY ROCKETRY ASSOCIATION
TOLERANCE STANDARD ISO 2768-mk	DRAWN DATE 24/04/23	BREAK ALL SHARP EDGES	ALL DIMENSIONS IN MM UNLESS STATED OTHERWISE
UNSPECIFIED FINISHES Ra 1.6	SIGNOFF BY TT	MATERIAL N/A	MASS (g) 3446.88 / SCALE 1:2 / SHEET 1 OF 1 / A2
UNSPECIFIED THREADS BS 3643/2:1981 6H/6g	SIGNOFF DATE 13/06/23	DESCRIPTION INJECTOR ASSEMBLY	
		DRAWING # LA-0003	

ITEM NO.	PART NUMBER	DESCRIPTION	QTY.
1	LA-0007	JACKETED CHAMBER ASSEMBLY	1
2	EASTERNSEALS-BS247V575		1
3	LA-0003	INJECTOR ASSEMBLY	1
4	SSCF-M6-25-A2		6
5	BRITLUBE-BL-15502		1

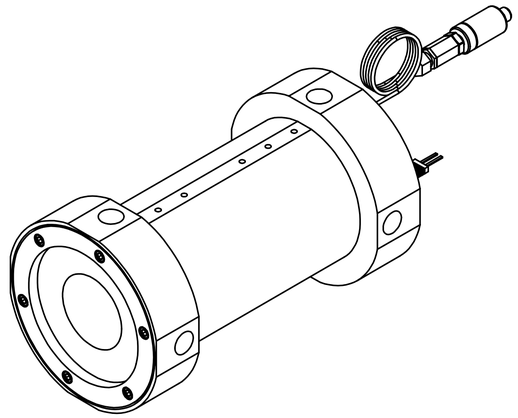

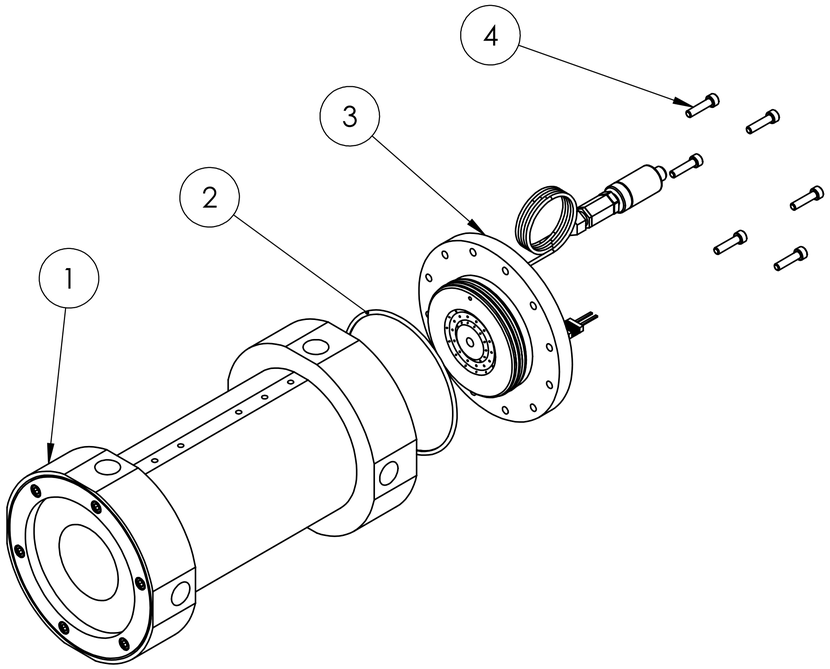

DRAWING STANDARD BS 8888:2020	DRAWN BY TT	**UNCONTROLLED IF PRINTED**	LURA LEEDS UNIVERSITY ROCKETRY ASSOCIATION
TOLERANCE STANDARD ISO 2768-mk	DRAWN DATE 24/04/23	BREAK ALL SHARP EDGES	ALL DIMENSIONS IN MM UNLESS STATED OTHERWISE
UNSPECIFIED FINISHES Ra 1.6	SIGNOFF BY TT	MATERIAL N/A	
UNSPECIFIED THREADS BS 3643/2:1981 6H/6g	SIGNOFF DATE 13/06/23	DESCRIPTION BASE ENGINE ASSEMBLY	MASS (g) 10075.64
		DRAWING # LA-0002	SCALE 1:5 / SHEET 1 OF 1 / A3

ITEM NO.	PART NUMBER	DESCRIPTION	QTY.
1	LA-0002	BASE ENGINE ASSEMBLY	1
2	RS 458-3953		6
3	RSPRO-342-9088		6
4	HYDRAULICMEGASTORE-00028		8
5	HYDRAULICMEGASTORE-02004		8
6	HYDRAULICMEGASTORE-CUSTOM_HOSE_ASSEMBLY		8
7	HYDRAULICMEGASTORE-09629		2
8	EASTERNSEALS-BON-010-9775-74(2.00)		8
9	HYDRAULICMEGASTORE-00939		2
10	HYDRAULICMEGASTORE-13318		1

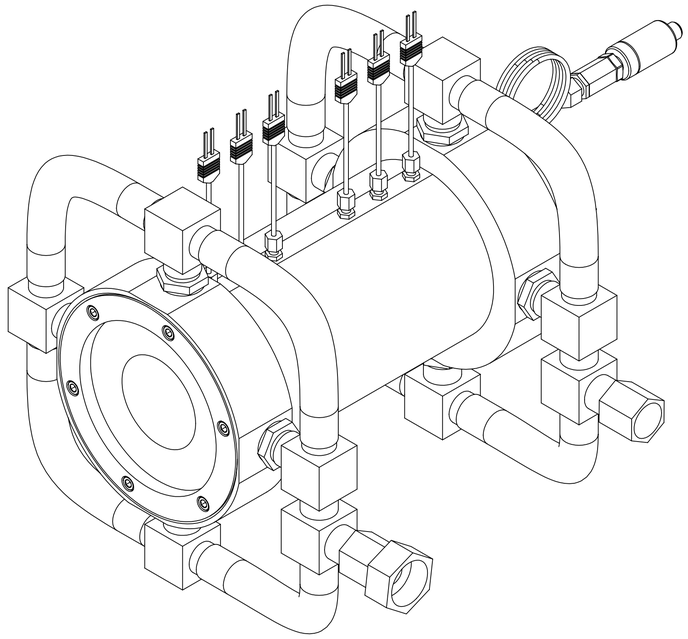

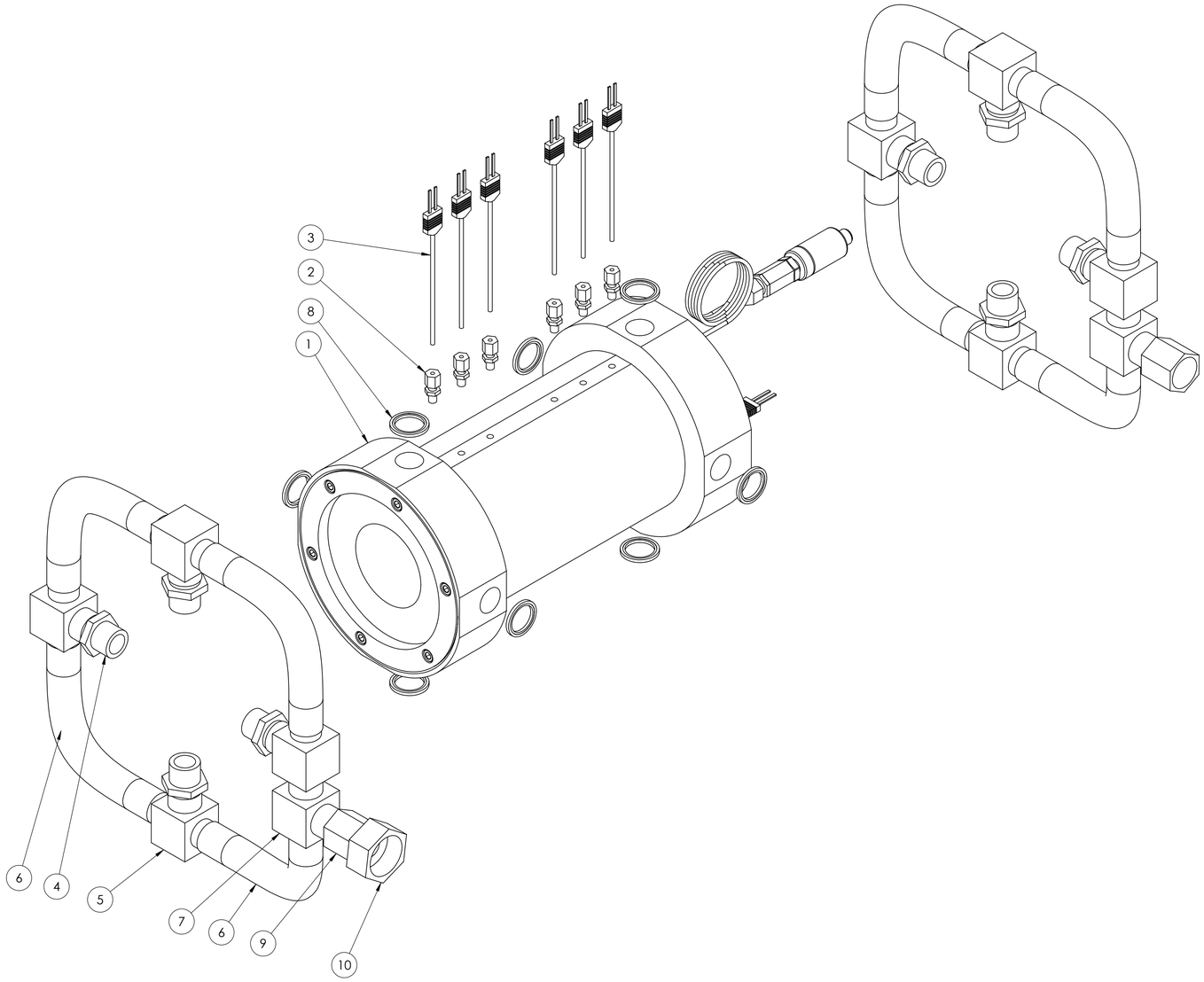

DRAWING STANDARD BS 8888:2020	DRAWN BY TT	**UNCONTROLLED IF PRINTED**	LURA LEEDS UNIVERSITY ROCKET RESEARCH ASSOCIATION
TOLERANCE STANDARD ISO 2768-mk	DRAWN DATE 24/04/23	BREAK ALL SHARP EDGES	
UNSPECIFIED FINISHES Ra 1.6	SIGNOFF BY TT	MATERIAL N/A	ALL DIMENSIONS IN MM UNLESS STATED OTHERWISE
UNSPECIFIED THREADS BS 3643/2:1981 6H/6g	SIGNOFF DATE 13/06/23	DESCRIPTION FULL ENGINE ASSEMBLY	MASS (g) 12529.95 / SCALE 1:2 / SHEET 1 OF 1 / A1
		DRAWING # LA-0006	

ITEM NO.	PART NUMBER	DESCRIPTION	QTY.
1	LP-0004	ENGINE MOUNT BASE	1
2	LP-0006	ENGINE MOUNT INTERFACE PLATE	1
3	LP-0005	ENGINE MOUNT BRACE	2

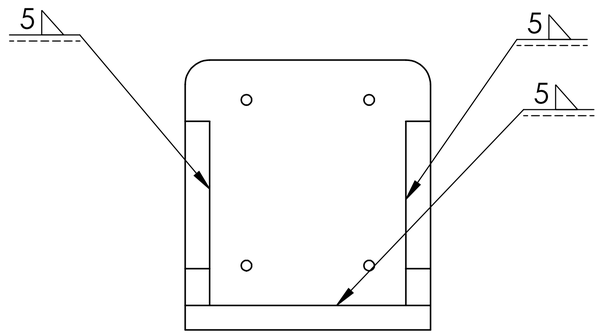

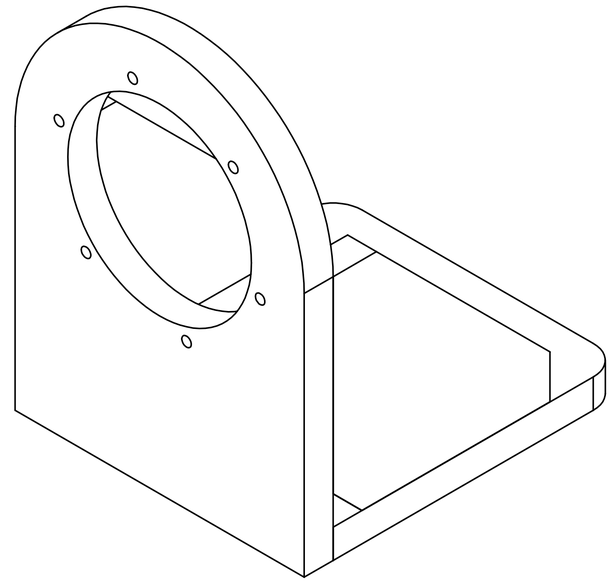

SCALE 1 : 3

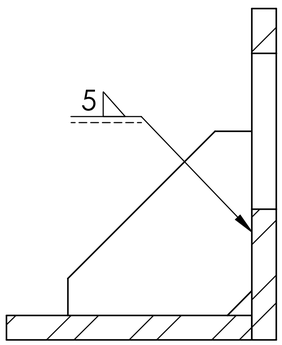

SECTION B-B

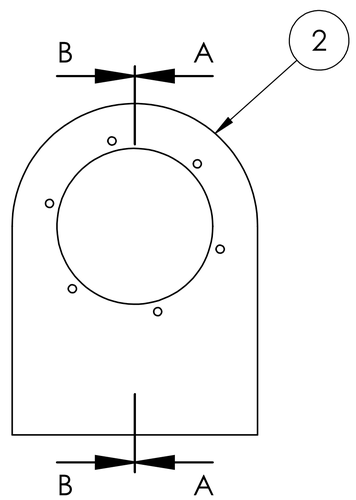

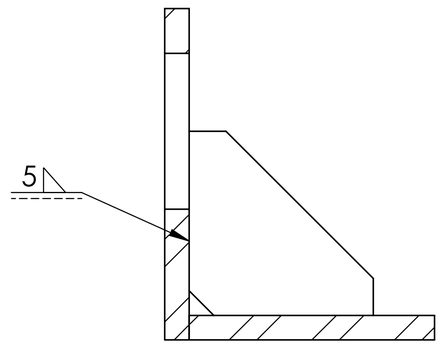

SECTION A-A

DRAWING STANDARD BS 8888:2020	DRAWN BY TT	**UNCONTROLLED IF PRINTED**	LURA LEEDS UNIVERSITY ROCKETRY ASSOCIATION
TOLERANCE STANDARD ISO 2768-mk	DRAWN DATE 24/04/23	BREAK ALL SHARP EDGES	ALL DIMENSIONS IN MM UNLESS STATED OTHERWISE
UNSPECIFIED FINISHES Ra 1.6	SIGNOFF BY TT	MATERIAL N/A	MASS (g) 16617.05 / SCALE 1:5 / SHEET 1 OF 1 / A3
UNSPECIFIED THREADS BS 3643/2:1981 6H/6g	SIGNOFF DATE 14/06/13	DESCRIPTION ENGINE MOUNT ASSEMBLY	
		DRAWING # LA-0005	

ITEM NO.	PART NUMBER	DESCRIPTION	QTY.
1	LA-0005	ENGINE MOUNT ASSEMBLY	1
2	LA-0006	FULL ENGINE ASSEMBLY	1
3	SSCF-M6-45-A2		6

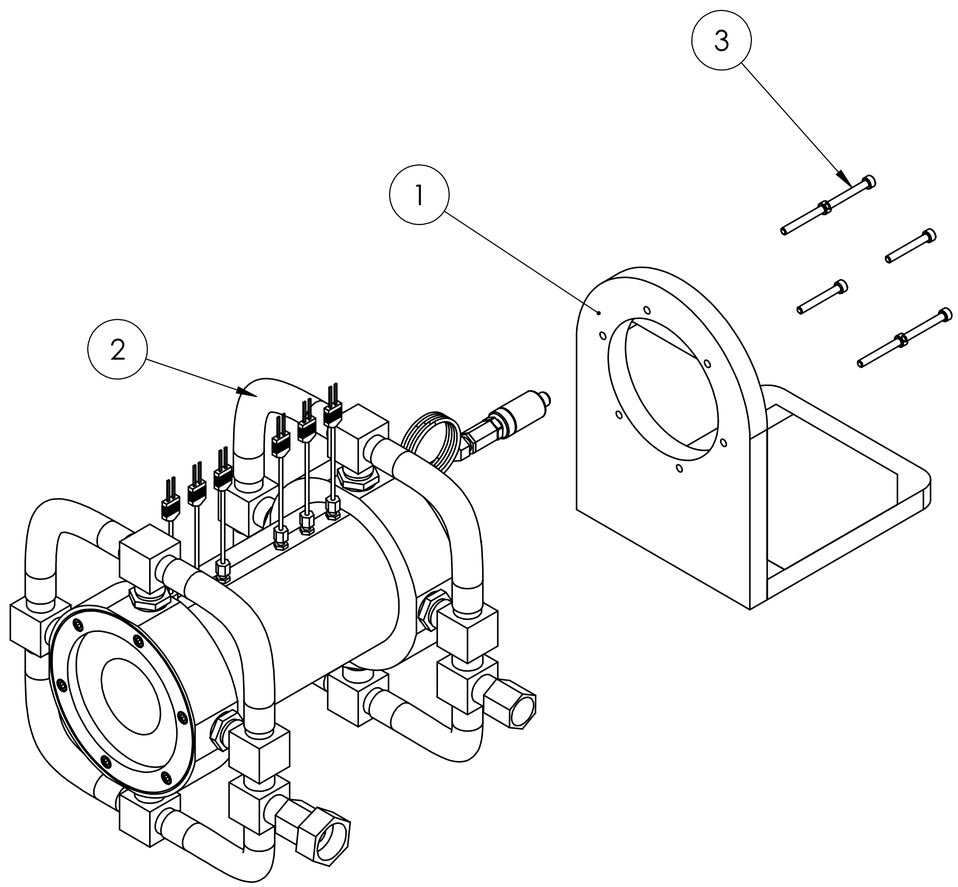

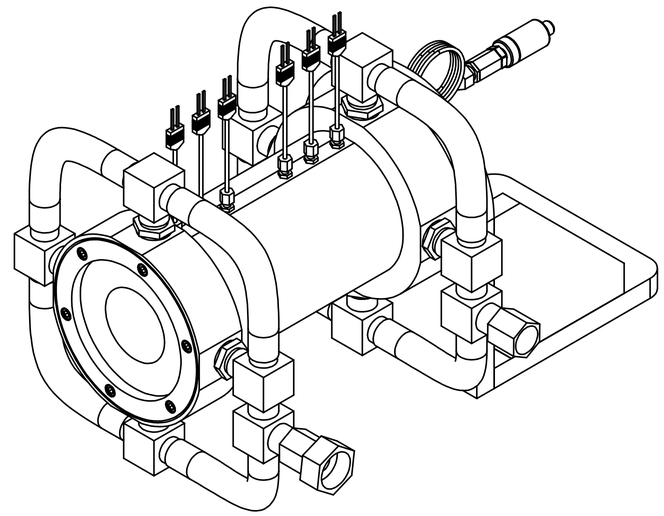

DRAWING STANDARD BS 8888:2020	DRAWN BY TT	**UNCONTROLLED IF PRINTED**	LURA LEEDS UNIVERSITY ROCKETRY ASSOCIATION
TOLERANCE STANDARD ISO 2768-mk	DRAWN DATE 24/04/23	BREAK ALL SHARP EDGES	ALL DIMENSIONS IN MM UNLESS STATED OTHERWISE
UNSPECIFIED FINISHES Ra 1.6	SIGNOFF BY TT	MATERIAL N/A	MASS (g) 29226.17 / SCALE 1:5 / SHEET 1 OF 1 / A3
UNSPECIFIED THREADS BS 3643/2:1981 6H/6g	SIGNOFF DATE 13/06/23	DESCRIPTION LOUIE	
		DRAWING # LA-0001	