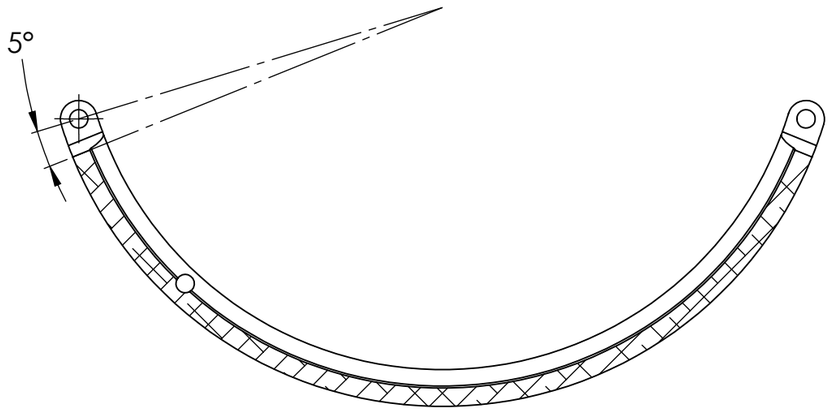

SECTION C-C

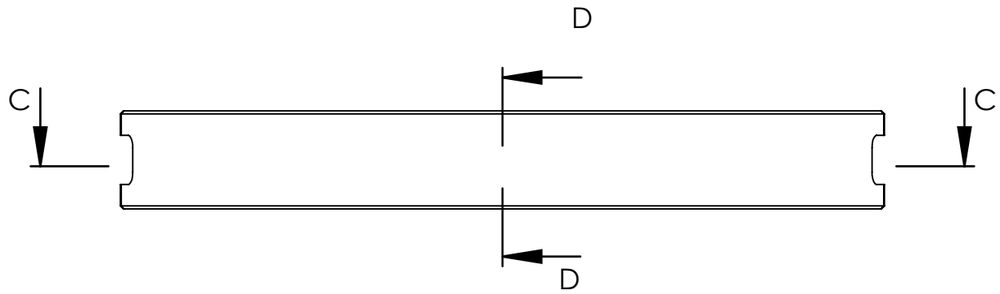

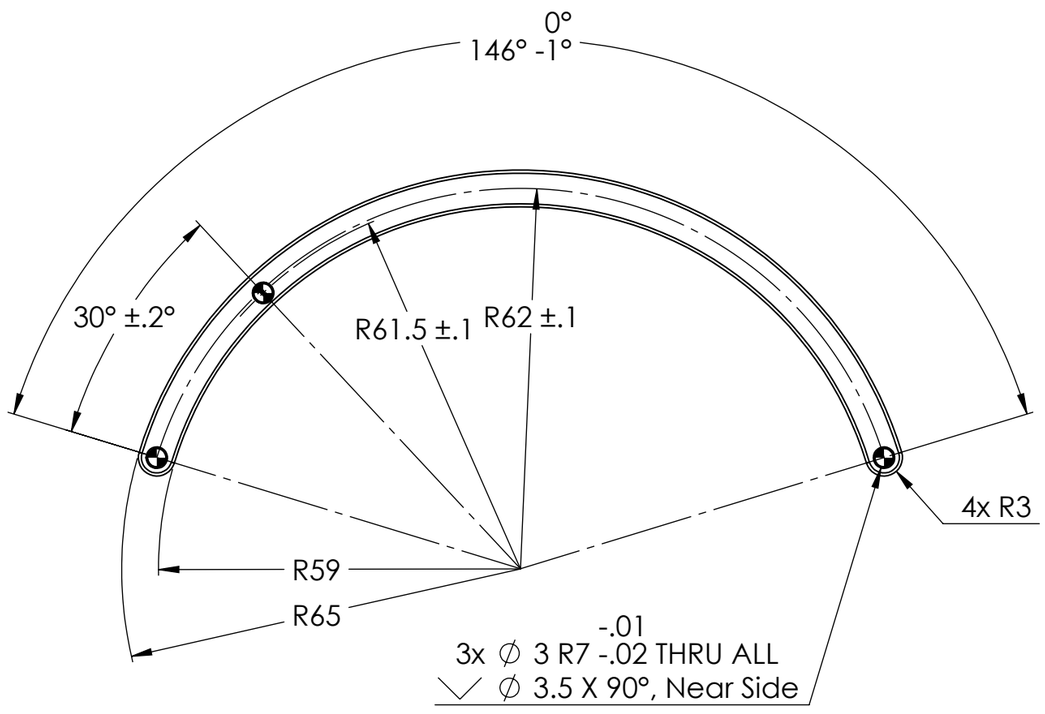

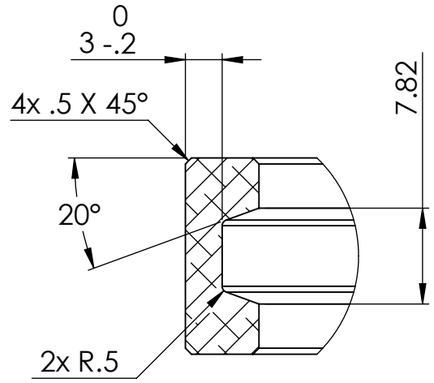

DETAIL E
SCALE 2 : 1

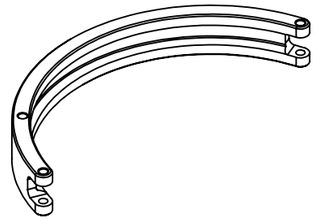

SCALE 1 : 2

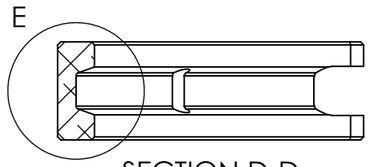

SECTION D-D

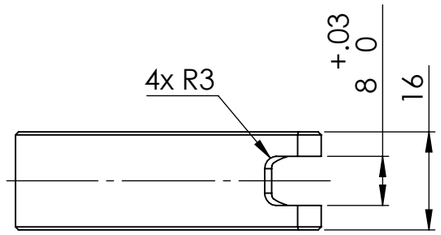

NOTES:

1. BEAD BLAST WITH #120 GRIT FOR UNIFORM MATTE TEXTURE THEN ANODISE IN ACCORDANCE WITH MIL-PRF-8625F 2020 ("ANODIC COATINGS FOR ALUMINUM AND ALUMINUM ALLOY"). THE FOLLOWING ANODISING REQUIREMENTS APPLY:
   - TYPE II, CLASS 2
   - 12 µm COATING THICKNESS
   - UNIFORMLY DYED VIOLET
   - INTERNAL THREADS ARE THE PREFERRED CONTACT LOCATIONS

DRAWING STANDARD BS 8888:2020	DRAWN BY TT	**UNCONTROLLED IF PRINTED**	LURA LEEDS UNIVERSITY ROCKETRY ASSOCIATION
TOLERANCE STANDARD ISO 2768-mk	DRAWN DATE 30/10/23	BREAK ALL SHARP EDGES	ALL DIMENSIONS IN MM UNLESS STATED OTHERWISE
UNSPECIFIED FINISHES Ra 1.6	SIGNOFF BY TT	MATERIAL 6061 ALLOY	MASS (g) 31.65 / SCALE 1:1 / SHEET 1 OF 1 / A3
UNSPECIFIED THREADS BS 3643/2:1981 6H/6g	SIGNOFF DATE 30/10/23	DESCRIPTION MANACLE RING ARM	
		DRAWING # LP-0000	

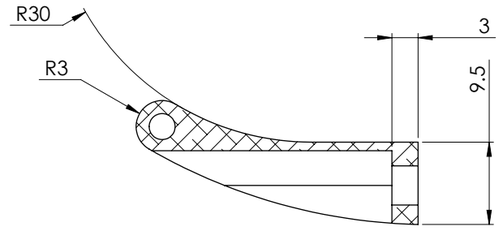

SECTION A-A

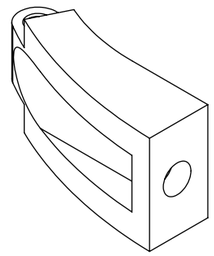

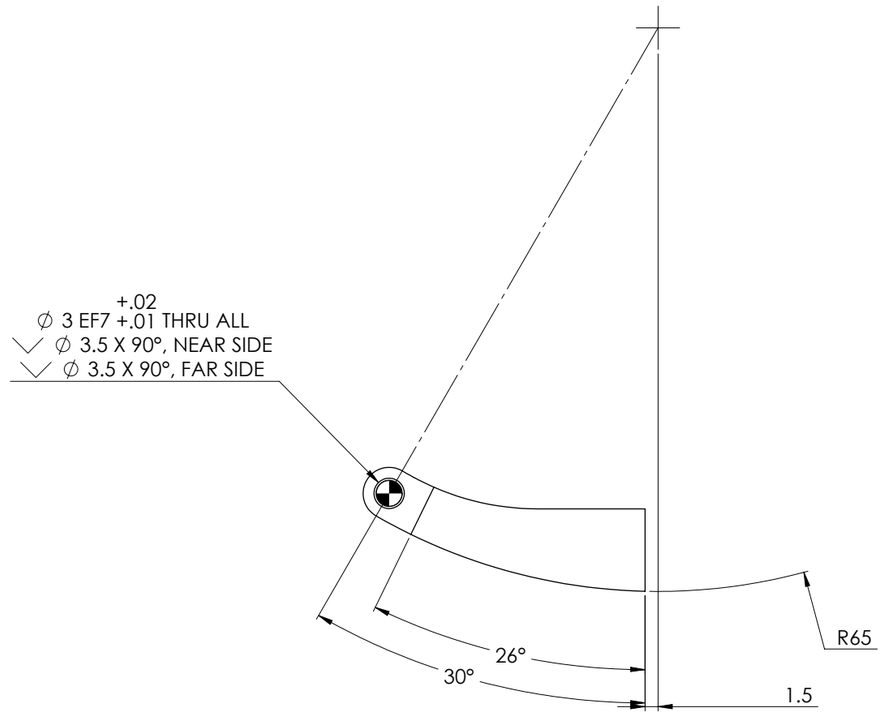

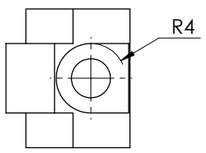

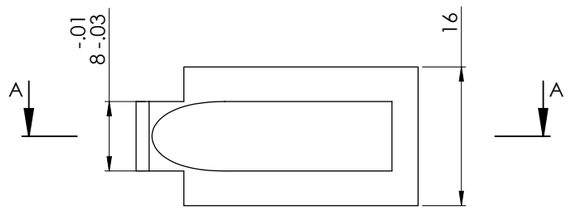

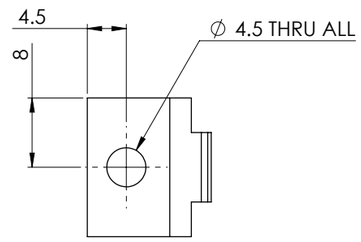

NOTES:

1. BEAD BLAST WITH #120 GRIT FOR UNIFORM MATTE TEXTURE THEN ANODISE IN ACCORDANCE WITH MIL-PRF-8625F 2020 ("ANODIC COATINGS FOR ALUMINUM AND ALUMINUM ALLOY"). THE FOLLOWING ANODISING REQUIREMENTS APPLY:
   - TYPE II, CLASS 2
   - 12 µm COATING THICKNESS
   - UNIFORMLY DYED VIOLET
   - INTERNAL THREADS ARE THE PREFERRED CONTACT LOCATIONS

DRAWING STANDARD BS 8888:2020	DRAWN BY TT	**UNCONTROLLED IF PRINTED**	LURA LEEDS UNIVERSITY ROCKETRY ASSOCIATION
TOLERANCE STANDARD ISO 2768-mk	DRAWN DATE 31/10/23	BREAK ALL SHARP EDGES	ALL DIMENSIONS IN MM UNLESS STATED OTHERWISE
UNSPECIFIED FINISHES Ra 1.6	SIGNOFF BY TT	MATERIAL 6061 ALLOY	MASS (g) 6.75 / SCALE 2:1 / SHEET 1 OF 1 / A2
UNSPECIFIED THREADS BS 3643/2:1981 6H/6g	SIGNOFF DATE 31/10/23	DESCRIPTION MANACLE RING LATCH A	
		DRAWING # LP-0013	

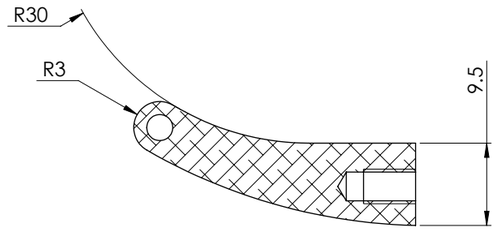

SECTION A-A

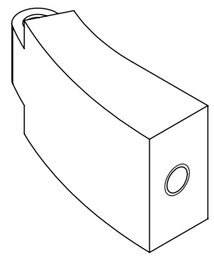

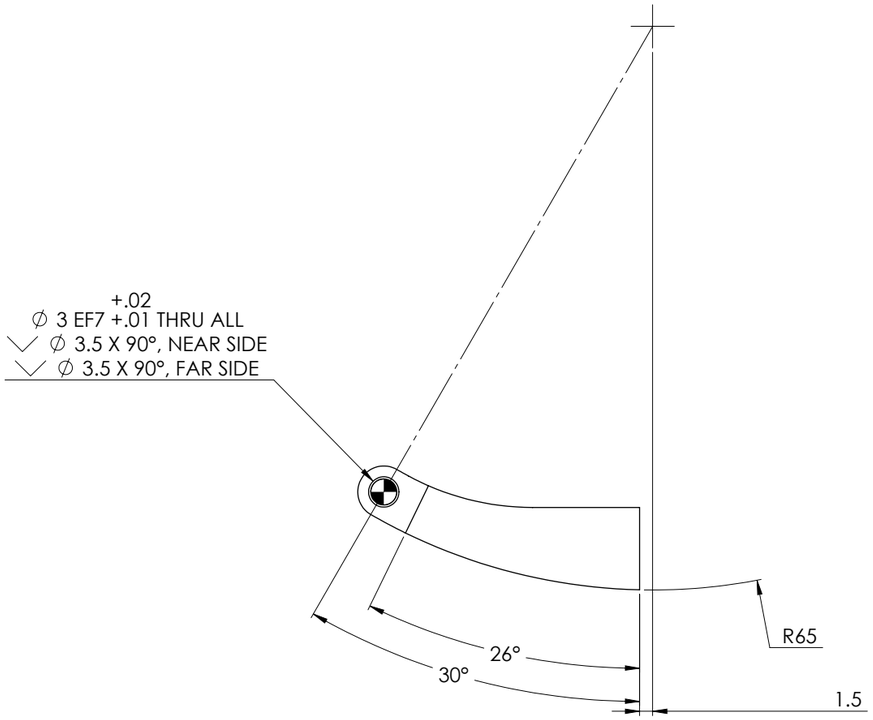

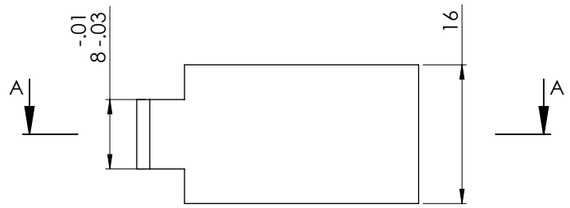

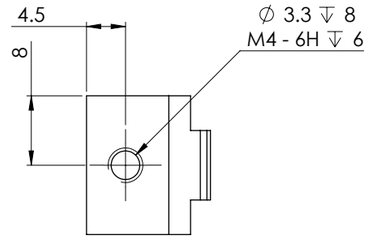

NOTES:

1. BEAD BLAST WITH #120 GRIT FOR UNIFORM MATTE TEXTURE THEN ANODISE IN ACCORDANCE WITH MIL-PRF-8625F 2020 ("ANODIC COATINGS FOR ALUMINUM AND ALUMINUM ALLOY"). THE FOLLOWING ANODISING REQUIREMENTS APPLY:
   - TYPE II, CLASS 2
   - 12 µm COATING THICKNESS
   - UNIFORMLY DYED VIOLET
   - INTERNAL THREADS ARE THE PREFERRED CONTACT LOCATIONS

DRAWING STANDARD BS 8888:2020	DRAWN BY TT	**UNCONTROLLED IF PRINTED**	LURA LEEDS UNIVERSITY ROCKETRY ASSOCIATION
TOLERANCE STANDARD ISO 2768-mk	DRAWN DATE 31/10/23	BREAK ALL SHARP EDGES	ALL DIMENSIONS IN MM UNLESS STATED OTHERWISE
UNSPECIFIED FINISHES Ra 1.6	SIGNOFF BY TT	MATERIAL 6061 ALLOY	MASS (g) 9.38
UNSPECIFIED THREADS BS 3643/2:1981 6H/6g	SIGNOFF DATE 31/10/23	DESCRIPTION MANACLE RING LATCH B	SCALE 2:1
		DRAWING # LP-0014	SHEET 1 OF 1
			A2

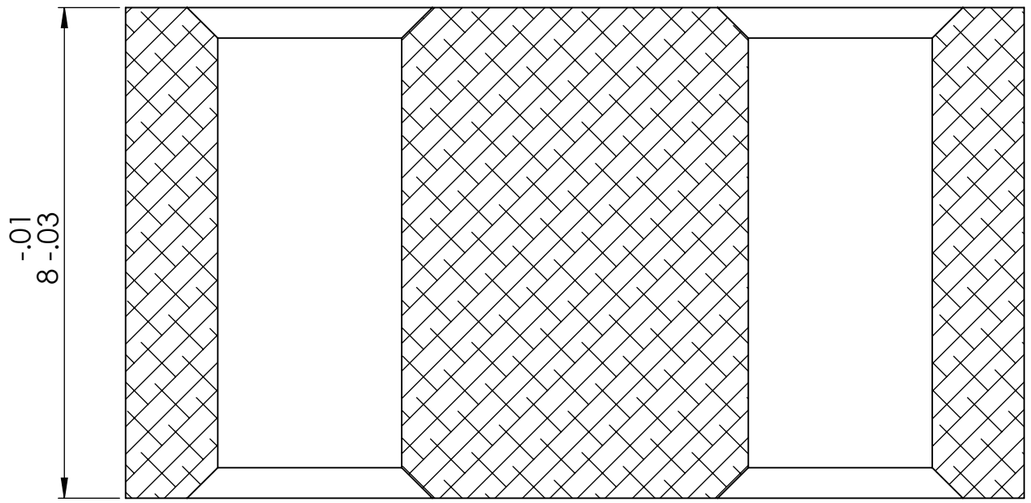

SECTION A-A

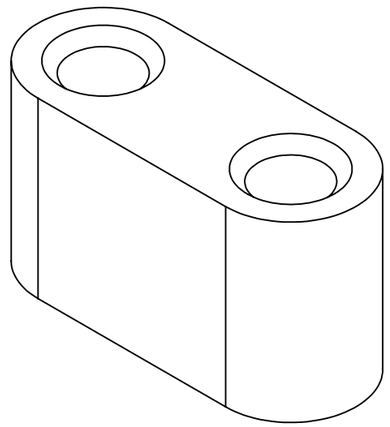

SCALE 5 : 1

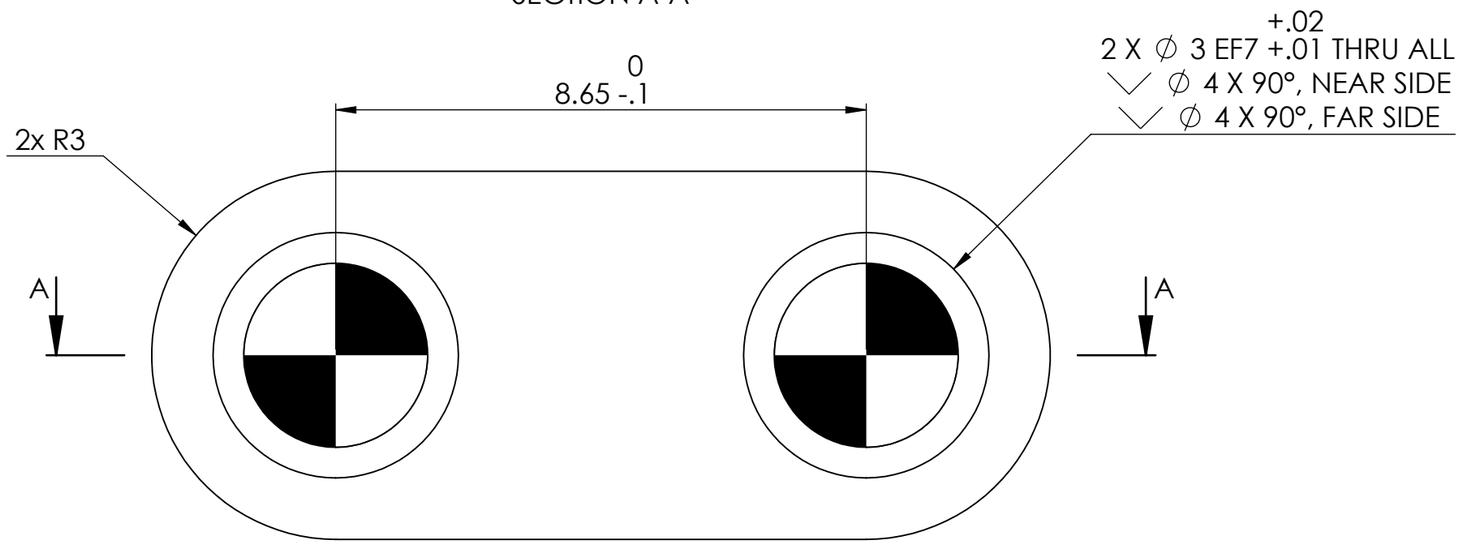

NOTES:

1. BEAD BLAST WITH #120 GRIT FOR UNIFORM MATTE TEXTURE THEN ANODISE IN ACCORDANCE WITH MIL-PRF-8625F 2020 ("ANODIC COATINGS FOR ALUMINUM AND ALUMINUM ALLOY"). THE FOLLOWING ANODISING REQUIREMENTS APPLY:
   - TYPE II, CLASS 2
   - 12 µm COATING THICKNESS
   - UNIFORMLY DYED VIOLET
   - INTERNAL THREADS ARE THE PREFERRED CONTACT LOCATIONS

DRAWING STANDARD BS 8888:2020	DRAWN BY TT	**UNCONTROLLED IF PRINTED**	LURA LEEDS UNIVERSITY ROCKETRY ASSOCIATION
TOLERANCE STANDARD ISO 2768-mk	DRAWN DATE 31/10/23	BREAK ALL SHARP EDGES	
UNSPECIFIED FINISHES Ra 1.6	SIGNOFF BY TT	MATERIAL 6061 ALLOY	ALL DIMENSIONS IN MM UNLESS STATED OTHERWISE
UNSPECIFIED THREADS BS 3643/2:1981 6H/6g	SIGNOFF DATE 31/10/23	DESCRIPTION MANACLE RING PIVOT	MASS (g) 1.41 · SCALE 10:1 · SHEET 1 OF 1 · A3
		DRAWING # LP-0015	

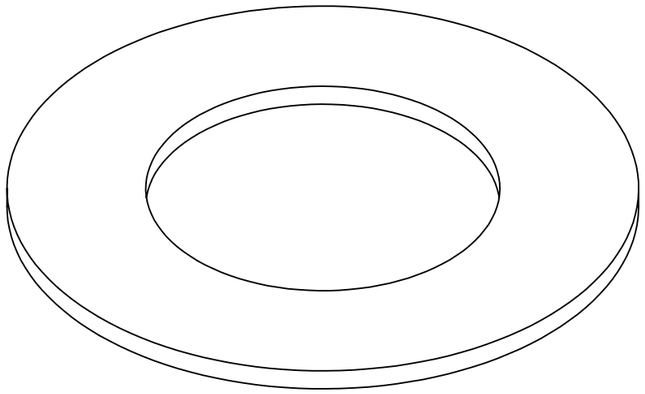

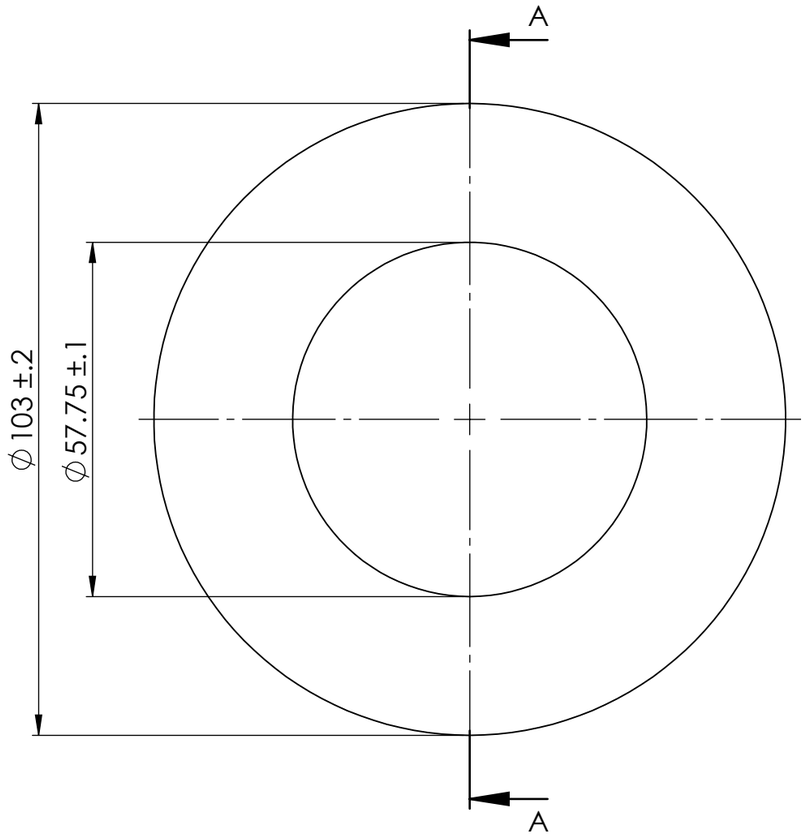

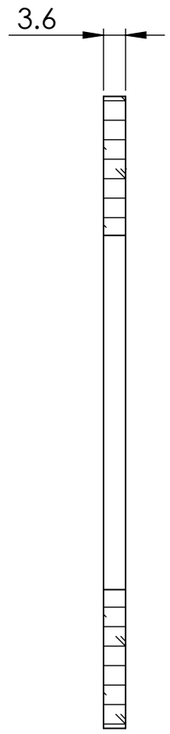

SECTION A-A

DRAWING STANDARD BS 8888:2020	DRAWN BY TT	**UNCONTROLLED IF PRINTED** BREAK ALL SHARP EDGES	LURA LEEDS UNIVERSITY ROCKETRY ASSOCIATION
TOLERANCE STANDARD ISO 2768-mk	DRAWN DATE 07/04/24	MATERIAL PLYWOOD	ALL DIMENSIONS IN MM UNLESS STATED OTHERWISE
UNSPECIFIED FINISHES Ra 1.6	SIGNOFF BY TT	DESCRIPTION 54mm MOTOR ADAPTER THRUST BULKHEAD	MASS (g) 11.52 · SCALE 1:1 · SHEET 1 OF 1 · A3
UNSPECIFIED THREADS BS 3643/2:1981 6H/6g	SIGNOFF DATE 07/04/24	DRAWING # LP-0084	

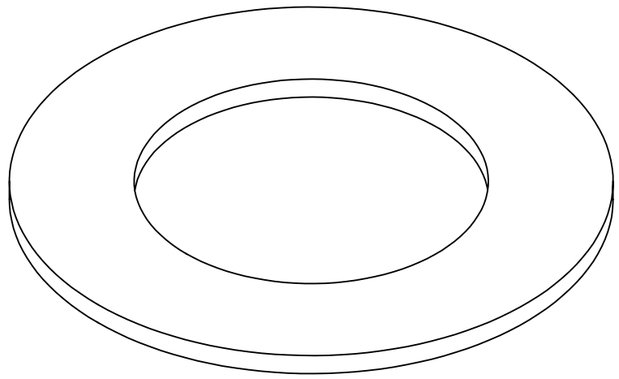

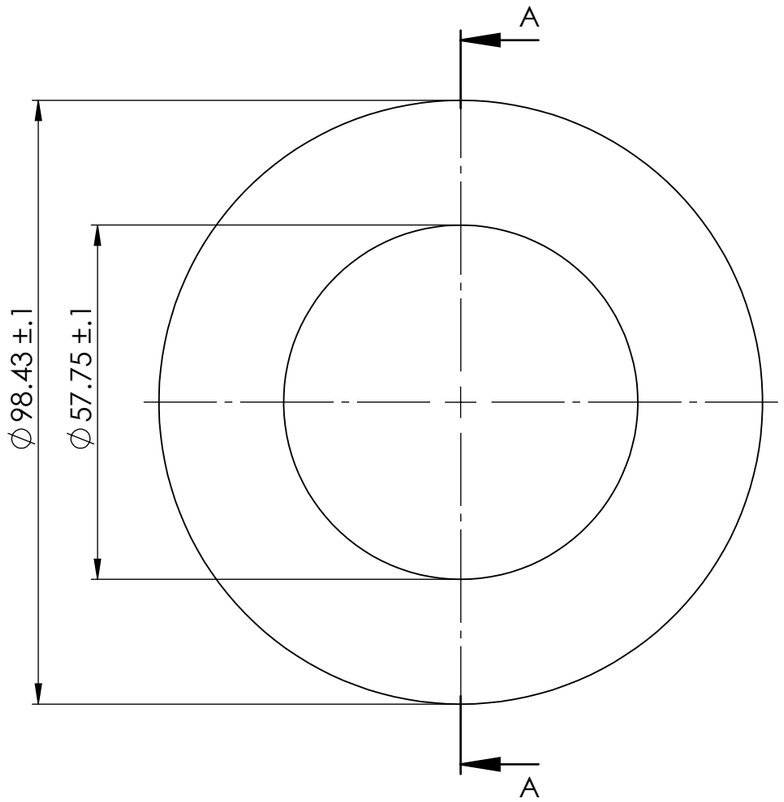

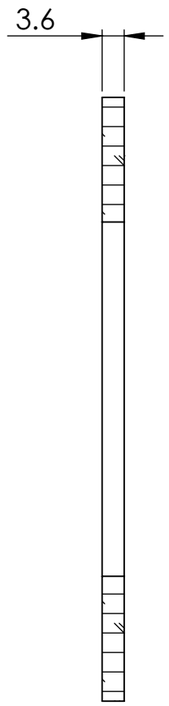

SECTION A-A

DRAWING STANDARD BS 8888:2020	DRAWN BY TT	**UNCONTROLLED IF PRINTED** BREAK ALL SHARP EDGES	LURA LEEDS UNIVERSITY ROCKETRY ASSOCIATION
TOLERANCE STANDARD ISO 2768-mk	DRAWN DATE 07/04/24	MATERIAL PLYWOOD	ALL DIMENSIONS IN MM UNLESS STATED OTHERWISE
UNSPECIFIED FINISHES Ra 1.6	SIGNOFF BY TT	DESCRIPTION 54mm MOTOR ADAPTER BULKHEAD	MASS (g) 10.06 · SCALE 1:1 · SHEET 1 OF 1 · A3
UNSPECIFIED THREADS BS 3643/2:1981 6H/6g	SIGNOFF DATE 07/04/24	DRAWING # LP-0083	

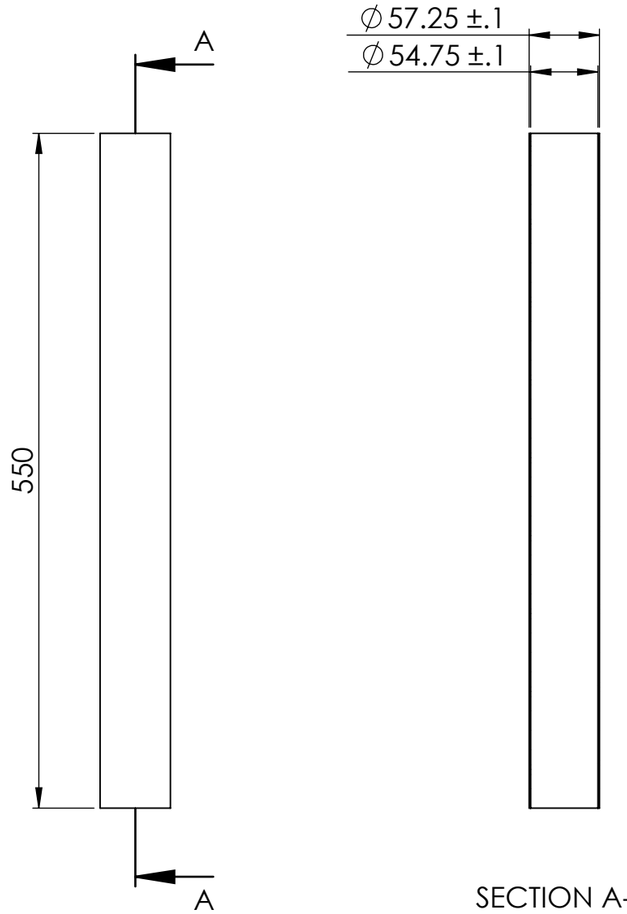

DRAWING STANDARD BS 8888:2020	DRAWN BY TT	**UNCONTROLLED IF PRINTED** BREAK ALL SHARP EDGES	LURA LEEDS UNIVERSITY ROCKETRY ASSOCIATION
TOLERANCE STANDARD ISO 2768-mk	DRAWN DATE 12/04/24	MATERIAL PHENOLIC TUBE	ALL DIMENSIONS IN MM UNLESS STATED OTHERWISE
UNSPECIFIED FINISHES Ra 1.6	SIGNOFF BY TT	DESCRIPTION 54mm MOTOR ADAPTER TUBE	MASS (g) 149.62 / SCALE 1:5 / SHEET 1 OF 1 / A3
UNSPECIFIED THREADS BS 3643/2:1981 6H/6g	SIGNOFF DATE 12/04/24	DRAWING # LP-0085	

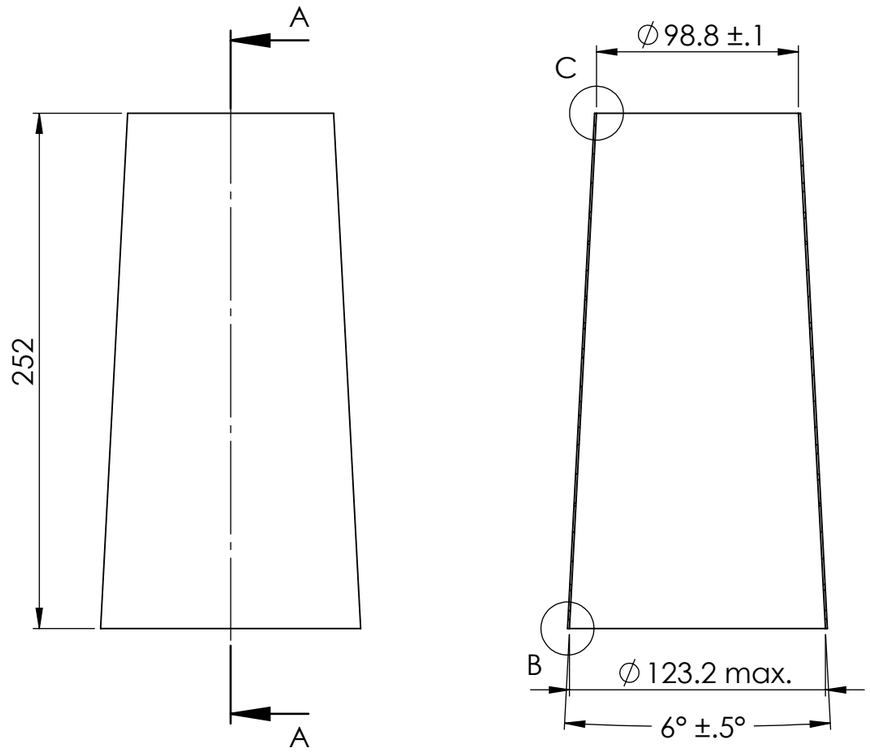

SECTION A-A

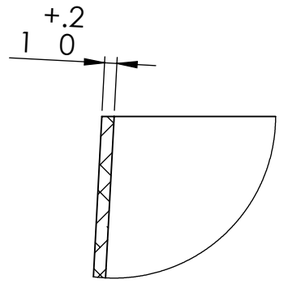

DETAIL C
SCALE 2 : 1

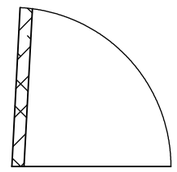

DETAIL B
SCALE 2 : 1

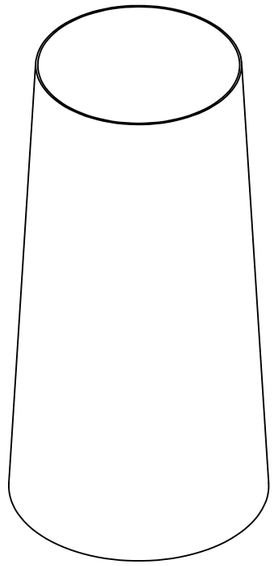

DRAWING STANDARD BS 8888:2020	DRAWN BY TT	**UNCONTROLLED IF PRINTED**	LURA LEEDS UNIVERSITY ROCKETRY ASSOCIATION
TOLERANCE STANDARD ISO 2768-mk	DRAWN DATE 04/09/23	BREAK ALL SHARP EDGES	
UNSPECIFIED FINISHES Ra 1.6	SIGNOFF BY TT	MATERIAL 1050 ALLOY	ALL DIMENSIONS IN MM UNLESS STATED OTHERWISE
UNSPECIFIED THREADS BS 3643/2:1981 6H/6g	SIGNOFF DATE 04/09/23	DESCRIPTION BOATTAIL	MASS (g) 241.78 · SCALE 1:3 · SHEET 1 OF 1 · A3
		DRAWING # LP-0021	

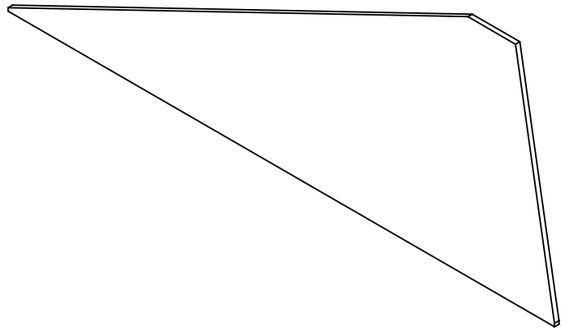

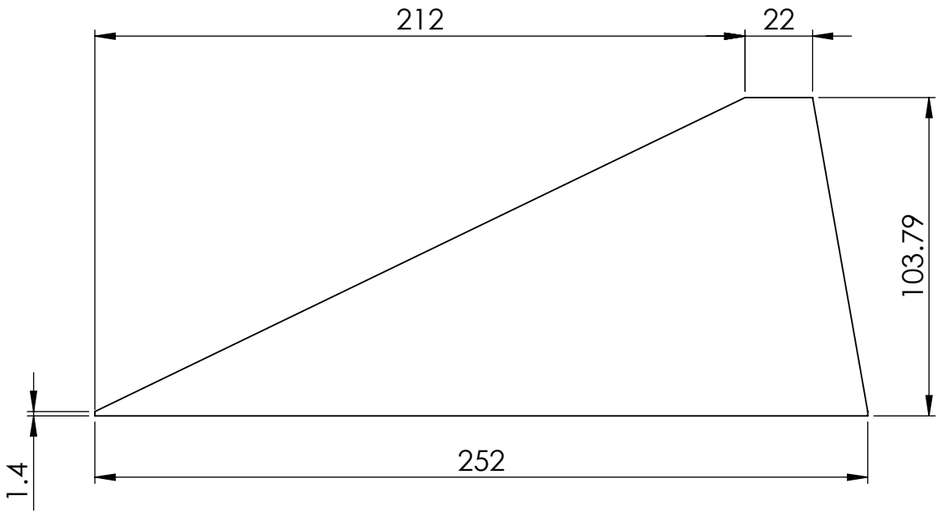

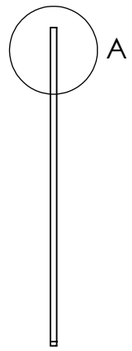

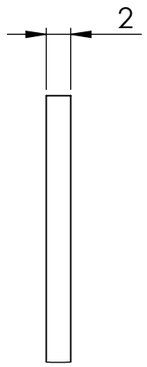

DETAIL A
SCALE 2 : 1

DRAWING STANDARD BS 8888:2020	DRAWN BY AD	**UNCONTROLLED IF PRINTED**	LURA LEEDS UNIVERSITY ROCKETRY ASSOCIATION
TOLERANCE STANDARD ISO 2768-mk	DRAWN DATE 12/04/24	BREAK ALL SHARP EDGES	
UNSPECIFIED FINISHES Ra 6.3	SIGNOFF BY TT	MATERIAL CARBON FIBER	ALL DIMENSIONS IN MM UNLESS STATED OTHERWISE
UNSPECIFIED THREADS BS 3643/2:1981 6H/6g	SIGNOFF DATE 12/04/24	DESCRIPTION FIN	MASS (g) 45.44 · SCALE 1:2 · SHEET 1 OF 1 · A3
		DRAWING # LP-0019	

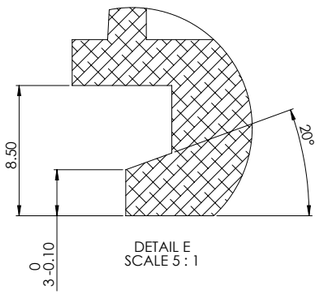

DETAIL E
SCALE 5 : 1

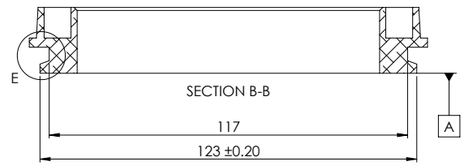

SECTION B-B

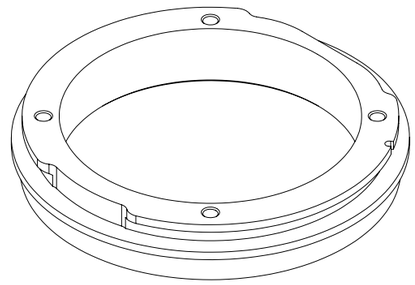

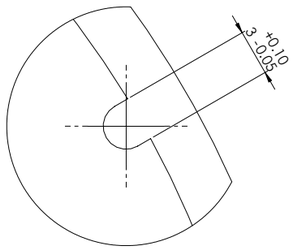

DETAIL C
SCALE 5 : 1

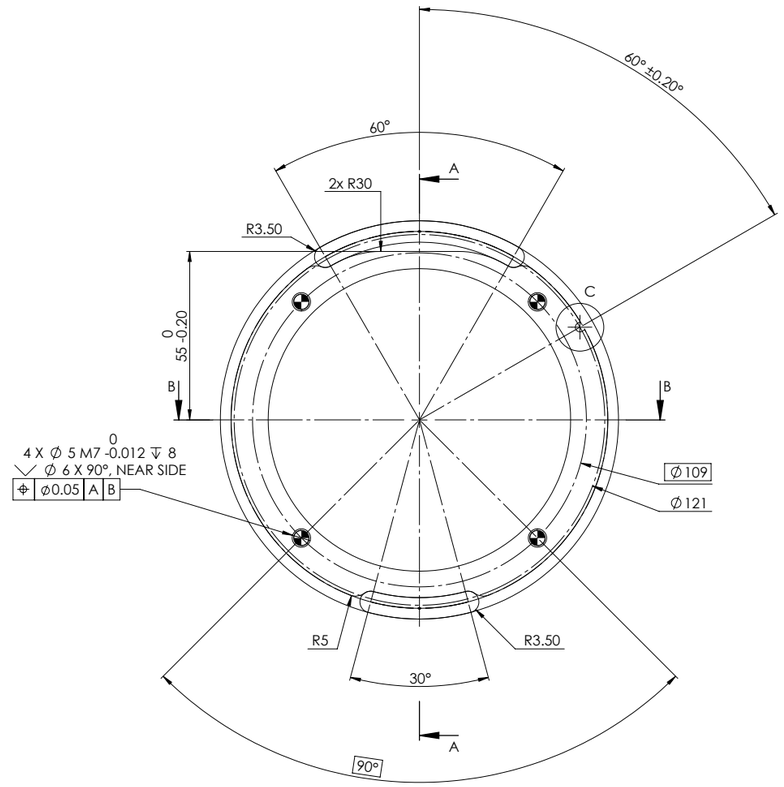

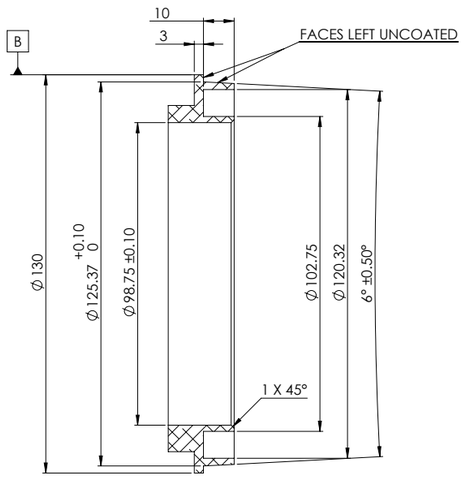

SECTION A-A

NOTES:

1. BEAD BLAST WITH #120 GRIT FOR UNIFORM MATTE TEXTURE THEN ANODISE IN ACCORDANCE WITH MIL-PRF-8625F 2020 ("ANODIC COATINGS FOR ALUMINUM AND ALUMINUM ALLOY"). THE FOLLOWING ANODISING REQUIREMENTS APPLY:
   - TYPE II, CLASS 2
   - 12 µm COATING THICKNESS
   - UNIFORMLY DYED VIOLET
   - INTERNAL THREADS ARE THE PREFERRED CONTACT LOCATIONS
2. TWO FACES LEFT UNCOATED. SEE NOTE.

DRAWING STANDARD BS 8888:2020	DRAWN BY NB	UNCONTROLLED IF PRINTED	LURA LEEDS UNIVERSITY ROCKET RESEARCH ASSOCIATION
TOLERANCE STANDARD ISO 2768-mk	DRAWN DATE 31/10/23	BREAK ALL SHARP EDGES / MATERIAL 6061 ALLOY	
UNSPECIFIED FINISHES Ra 1.6	SIGNOFF BY TT	DESCRIPTION FINCAN COUPLER	ALL DIMENSIONS IN MM UNLESS STATED OTHERWISE
UNSPECIFIED THREADS BS 3643/2:1981 6H/6g	SIGNOFF DATE 31/10/23	DRAWING # LP-0022	MASS (g) 159.55 · SCALE 1:1 · SHEET 1 OF 1 · A1

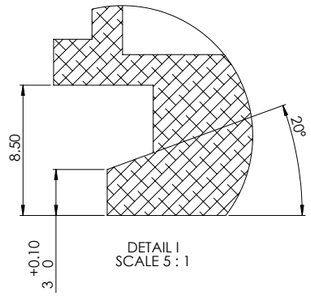

DETAIL I
SCALE 5 : 1

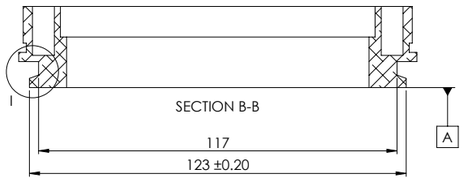

SECTION B-B

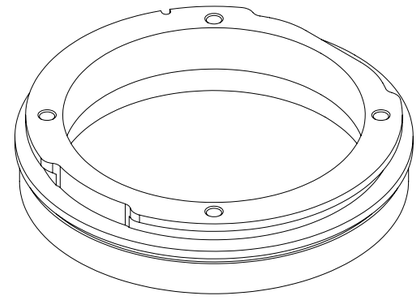

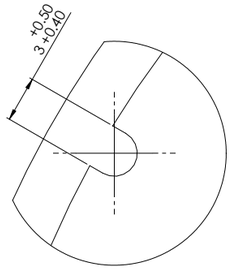

DETAIL D
SCALE 5 : 1

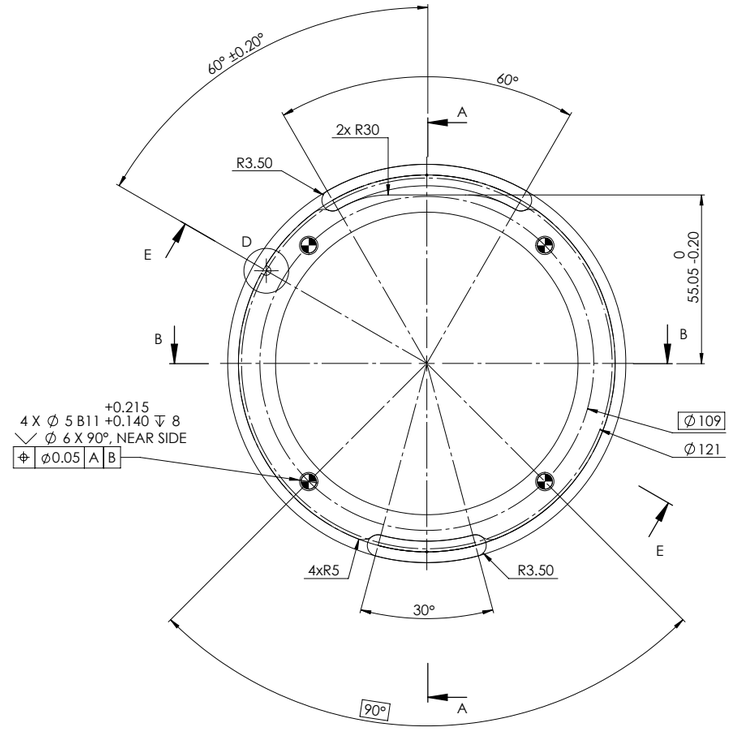

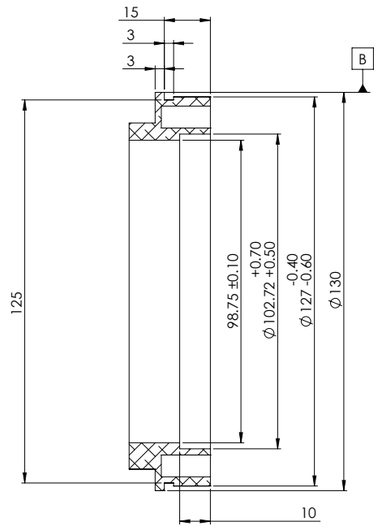

SECTION A-A

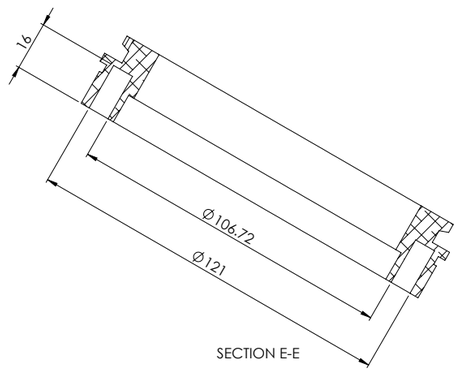

SECTION E-E

NOTES:

1. BEAD BLAST WITH #120 GRIT FOR UNIFORM MATTE TEXTURE THEN ANODISE IN ACCORDANCE WITH MIL-PRF-8625F 2020 ("ANODIC COATINGS FOR ALUMINUM AND ALUMINUM ALLOY"). THE FOLLOWING ANODISING REQUIREMENTS APPLY:
   - TYPE II, CLASS 2
   - 12 µm COATING THICKNESS
   - UNIFORMLY DYED VIOLET
   - INTERNAL THREADS ARE THE PREFERRED CONTACT LOCATIONS

DRAWING STANDARD BS 8888:2020	DRAWN BY NB	UNCONTROLLED IF PRINTED	LURA LEEDS UNIVERSITY ROCKETRY ASSOCIATION
TOLERANCE STANDARD ISO 2768-mk	DRAWN DATE 30/10/23	BREAK ALL SHARP EDGES	
UNSPECIFIED FINISHES Ra 1.6	SIGNOFF BY TT	MATERIAL 6061 ALLOY	ALL DIMENSIONS IN MM UNLESS STATED OTHERWISE
UNSPECIFIED THREADS BS 3643/2:1981 6H/6g	SIGNOFF DATE 30/10/23	DESCRIPTION AFT AFT TUBE COUPLER	MASS (g) 191.71 · SCALE 1:1 · SHEET 1 OF 1 · A1
		DRAWING # LP-0025	

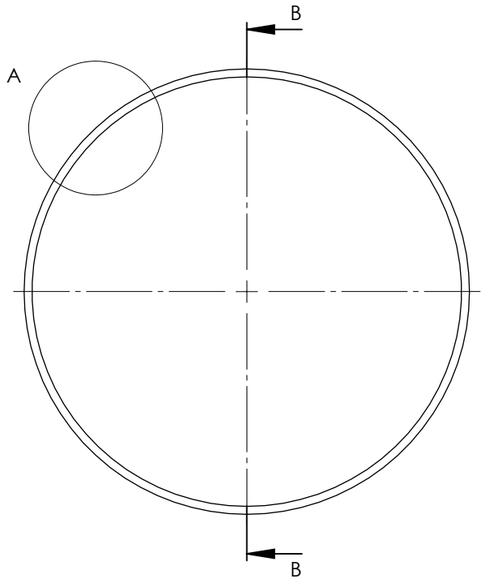

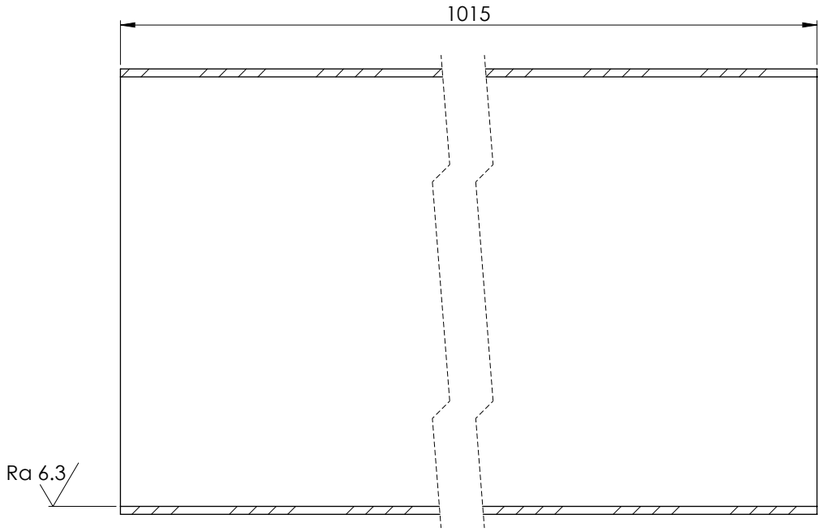

SECTION B-B

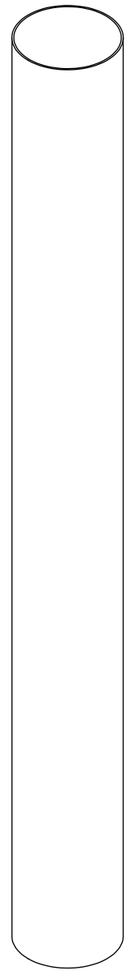

SCALE 1 : 4

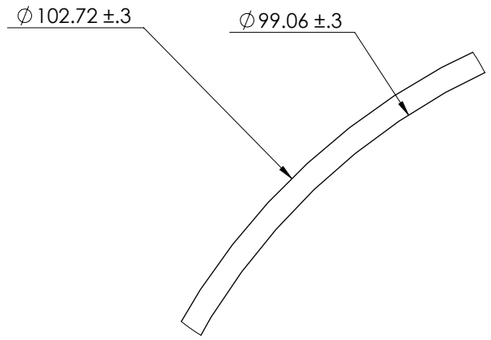

DETAIL A
SCALE 3 : 1

DRAWING STANDARD BS 8888:2020	DRAWN BY AD	UNCONTROLLED IF PRINTED	LURA LEEDS UNIVERSITY ROCKETRY ASSOCIATION
TOLERANCE STANDARD ISO 2768-mk	DRAWN DATE 30/10/23	BREAK ALL SHARP EDGES	ALL DIMENSIONS IN MM UNLESS STATED OTHERWISE
UNSPECIFIED FINISHES Ra 50	SIGNOFF BY TT	MATERIAL CARBON FIBER	
UNSPECIFIED THREADS BS 3643/2:1981 6H/6g	SIGNOFF DATE 30/10/23	DESCRIPTION MOTOR TUBE	MASS (g) 929.57 · SCALE 1:1 · SHEET 1 OF 1 · A2
		DRAWING # LP-0024	

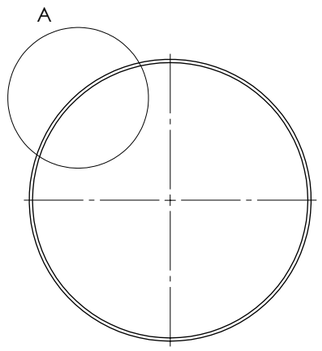

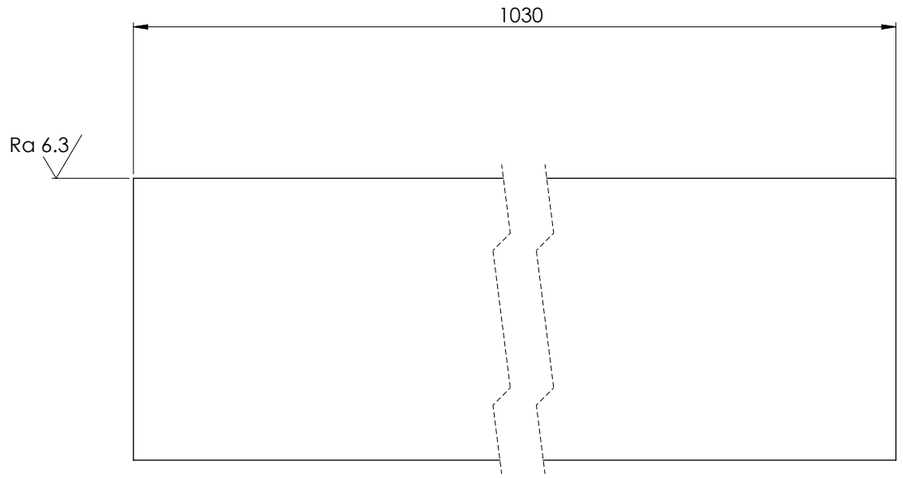

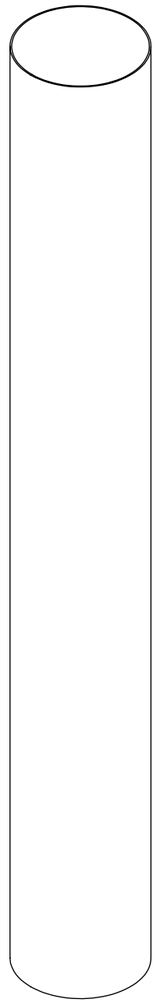

SCALE 1 : 4

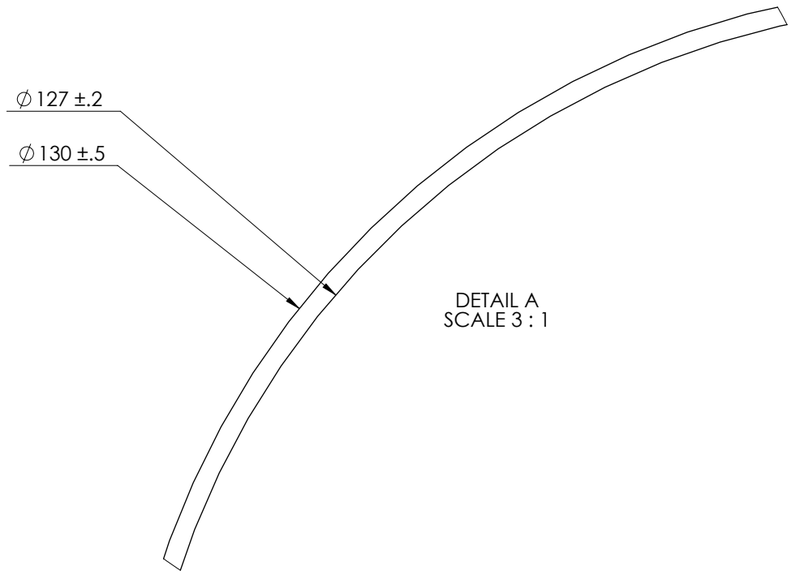

DETAIL A
SCALE 3 : 1

DRAWING STANDARD BS 8888:2020	DRAWN BY AD	**UNCONTROLLED IF PRINTED**	LURA LEEDS UNIVERSITY ROCKETRY ASSOCIATION
TOLERANCE STANDARD ISO 2768-mk	DRAWN DATE 30/10/23	BREAK ALL SHARP EDGES	
UNSPECIFIED FINISHES Ra 50	SIGNOFF BY TT	MATERIAL CARBON FIBER	ALL DIMENSIONS IN MM UNLESS STATED OTHERWISE
UNSPECIFIED THREADS BS 3643/2:1981 6H/6g	SIGNOFF DATE 30/10/23	DESCRIPTION AFT TUBE SKIN	MASS (g) 985.46 · SCALE 1:2 · SHEET 1 OF 1 · A2
		DRAWING # LP-0023	

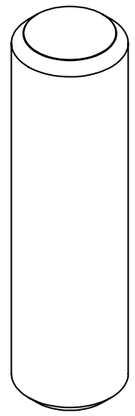

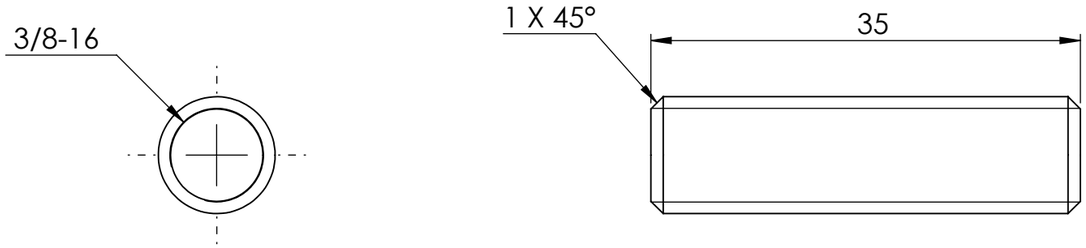

DRAWING STANDARD BS 8888:2020	DRAWN BY TT	**UNCONTROLLED IF PRINTED**	LURA LEEDS UNIVERSITY ROCKETRY ASSOCIATION
TOLERANCE STANDARD ISO 2768-mk	DRAWN DATE 04/09/23	BREAK ALL SHARP EDGES MATERIAL AISI 304	
UNSPECIFIED FINISHES Ra 1.6	SIGNOFF BY TT	DESCRIPTION MOTOR CASE RETAINING ROD - 6GXL	ALL DIMENSIONS IN MM UNLESS STATED OTHERWISE
UNSPECIFIED THREADS BS 3643/2:1981 6H/6g	SIGNOFF DATE 04/09/23	DRAWING # LP-0018	MASS (g) 19.73 · SCALE 2:1 · SHEET 1 OF 1 · A3

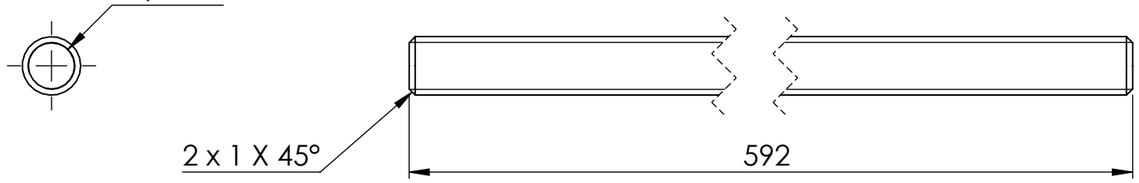

SCALE 1 : 5

DRAWING STANDARD BS 8888:2020	DRAWN BY TT	**UNCONTROLLED IF PRINTED**	LURA LEEDS UNIVERSITY ROCKETRY ASSOCIATION
TOLERANCE STANDARD ISO 2768-mk	DRAWN DATE 03/09/23	BREAK ALL SHARP EDGES MATERIAL AISI 304	
UNSPECIFIED FINISHES Ra 1.6	SIGNOFF BY TT	DESCRIPTION MOTOR CASE RETAINING ROD - 4G	ALL DIMENSIONS IN MM UNLESS STATED OTHERWISE
UNSPECIFIED THREADS BS 3643/2:1981 6H/6g	SIGNOFF DATE 05/09/23	DRAWING # LP-0044	MASS (g) 337.24 · SCALE 1:1 · SHEET 1 OF 1 · A3

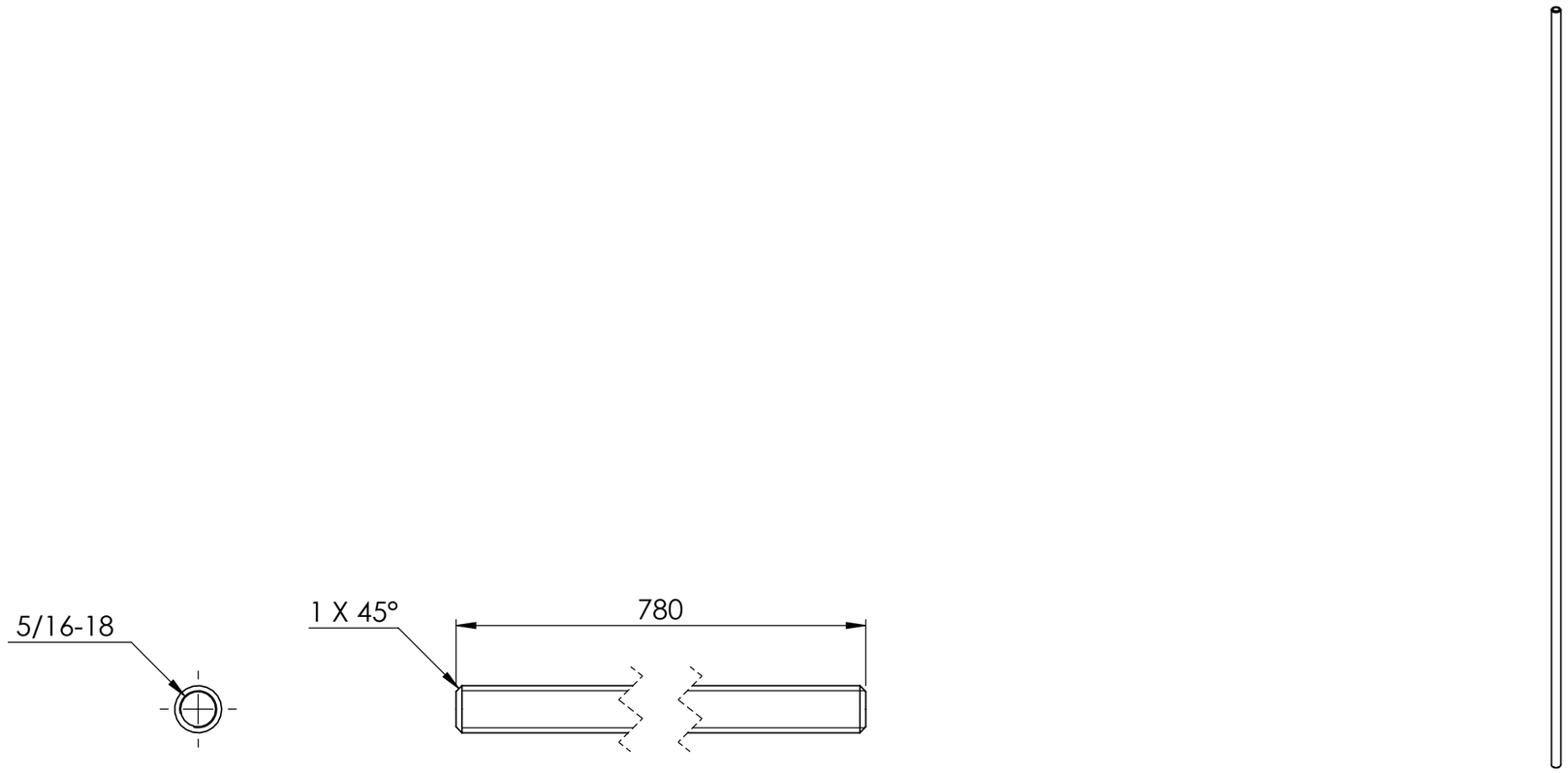

SCALE 1 : 5

DRAWING STANDARD BS 8888:2020	DRAWN BY TT	**UNCONTROLLED IF PRINTED**	LURA LEEDS UNIVERSITY ROCKETRY ASSOCIATION
TOLERANCE STANDARD ISO 2768-mk	DRAWN DATE 20/09/23	BREAK ALL SHARP EDGES MATERIAL AISI 304	ALL DIMENSIONS IN MM UNLESS STATED OTHERWISE
UNSPECIFIED FINISHES Ra 1.6	SIGNOFF BY TT	DESCRIPTION MOTOR CASE RETAINING ROD - 54/2560	MASS (g) 308.59 / SCALE 1:1 / SHEET 1 OF 1 / A3
UNSPECIFIED THREADS BS 3643/2:1981 6H/6g	SIGNOFF DATE 20/09/23	DRAWING # LP-0071	

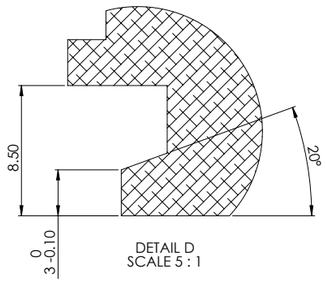

DETAIL D
SCALE 5 : 1

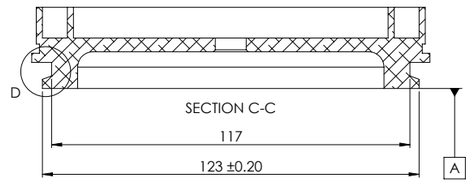

SECTION C-C

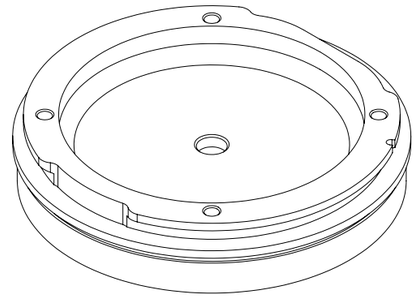

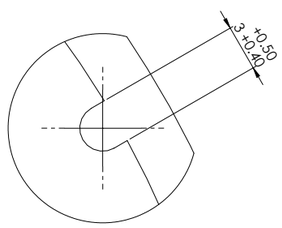

DETAIL A
SCALE 5 : 1

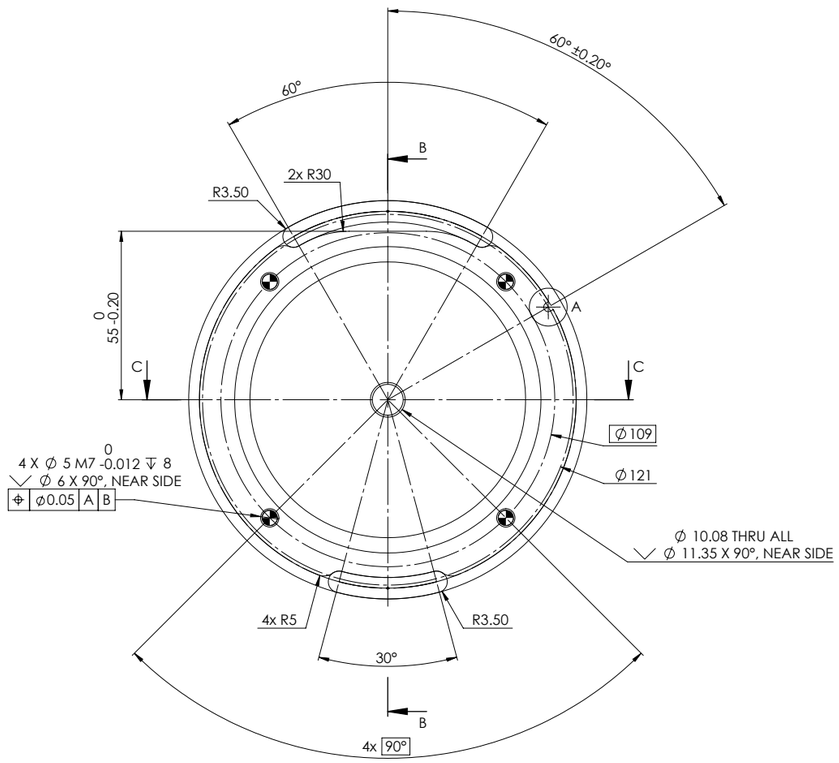

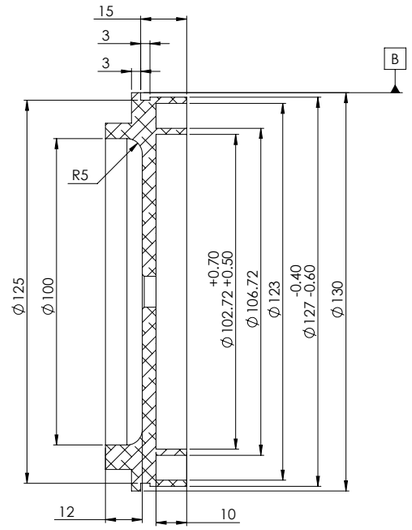

SECTION B-B

NOTES:

1. BEAD BLAST WITH #120 GRIT FOR UNIFORM MATTE TEXTURE THEN ANODISE IN ACCORDANCE WITH MIL-PRF-8625F 2020 ("ANODIC COATINGS FOR ALUMINUM AND ALUMINUM ALLOY"). THE FOLLOWING ANODISING REQUIREMENTS APPLY:
   - TYPE II, CLASS 2
   - 12 µm COATING THICKNESS
   - UNIFORMLY DYED VIOLET
   - INTERNAL THREADS ARE THE PREFERRED CONTACT LOCATIONS

DRAWING STANDARD BS 8888:2020	DRAWN BY KL	UNCONTROLLED IF PRINTED	LURA LEEDS UNIVERSITY ROCKETRY ASSOCIATION
TOLERANCE STANDARD ISO 2768-mk	DRAWN DATE 30/10/23	BREAK ALL SHARP EDGES	
UNSPECIFIED FINISHES Ra 1.6	SIGNOFF BY TT	MATERIAL 6061 ALLOY	ALL DIMENSIONS IN MM UNLESS STATED OTHERWISE
UNSPECIFIED THREADS BS 3643/2:1981 6H/6g	SIGNOFF DATE 30/10/23	DESCRIPTION FORWARD AFT TUBE COUPLER	MASS (g) 312.93 · SCALE 1:1 · SHEET 1 OF 1 · A1
		DRAWING # LP-0026	

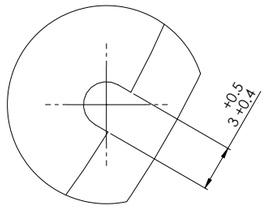

DETAIL E
SCALE 5 : 1

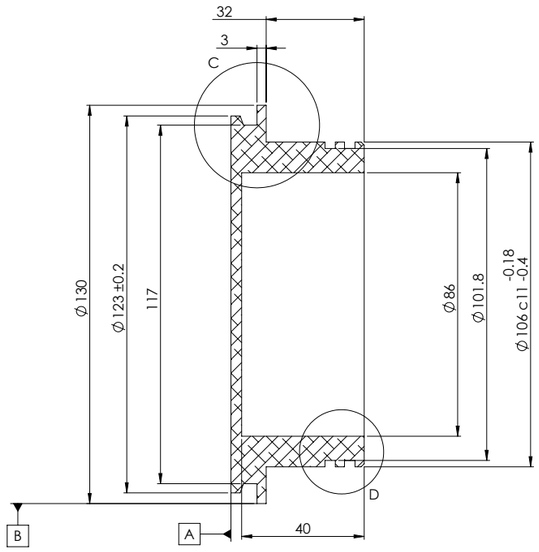

SECTION B-B

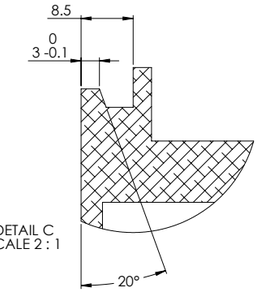

DETAIL C
SCALE 2 : 1

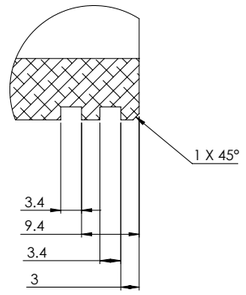

DETAIL D
SCALE 2 : 1

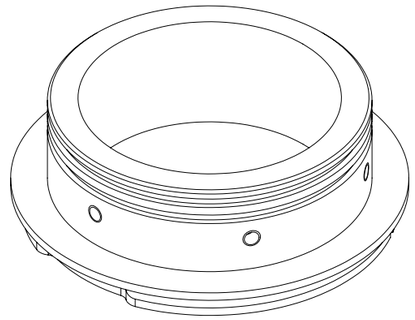

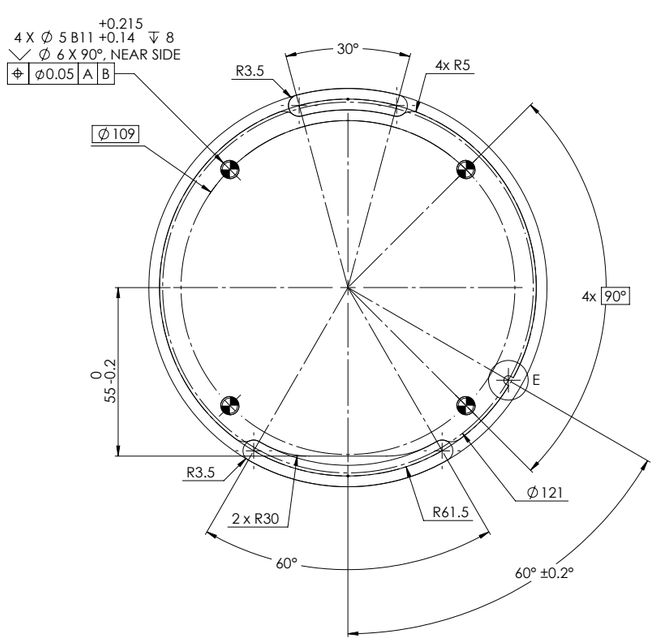

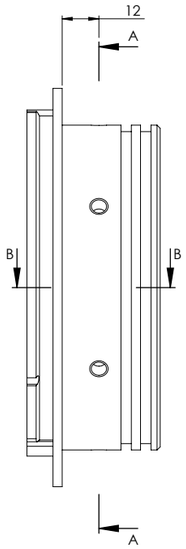

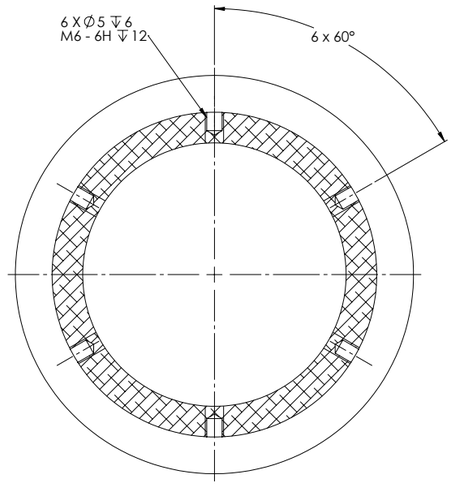

SECTION A-A

NOTES:

1. BEAD BLAST WITH #120 GRIT FOR UNIFORM MATTE TEXTURE THEN ANODISE IN ACCORDANCE WITH MIL-PRF-8625F 2020 ("ANODIC COATINGS FOR ALUMINUM AND ALUMINUM ALLOY"). THE FOLLOWING ANODISING REQUIREMENTS APPLY:
   - TYPE II, CLASS 2
   - 12 µm COATING THICKNESS
   - UNIFORMLY DYED VIOLET
   - INTERNAL THREADS ARE THE PREFERRED CONTACT LOCATIONS

DRAWING STANDARD BS 8888:2020	DRAWN BY AD	**UNCONTROLLED IF PRINTED**	LURA LEEDS UNIVERSITY ROCKETRY ASSOCIATION
TOLERANCE STANDARD ISO 2768-mk	DRAWN DATE 31/10/23	BREAK ALL SHARP EDGES	
UNSPECIFIED FINISHES Ra 1.6	SIGNOFF BY TT	MATERIAL 6061 ALLOY	ALL DIMENSIONS IN MM UNLESS STATED OTHERWISE
UNSPECIFIED THREADS BS 3643/2:1981 6H/6g	SIGNOFF DATE 31/10/23	DESCRIPTION AVIONICS BAY AFT CAP	MASS (g) 477.17 · SCALE 1:1 · SHEET 1 OF 1 · A1
		DRAWING # LP-0032	

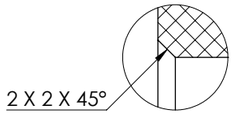

DETAIL E
SCALE 2 : 1

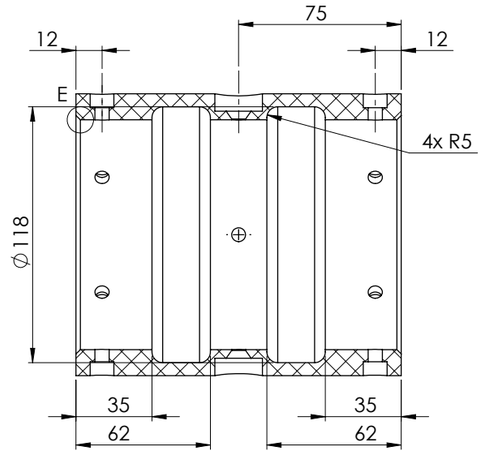

SECTION C-C

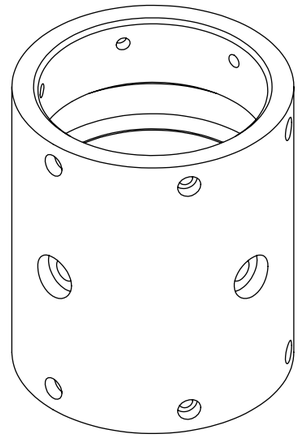

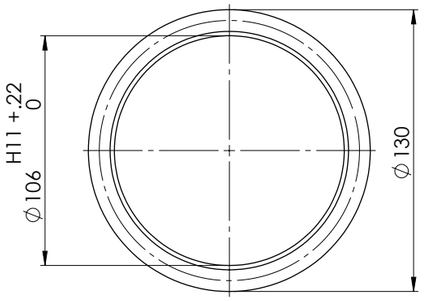

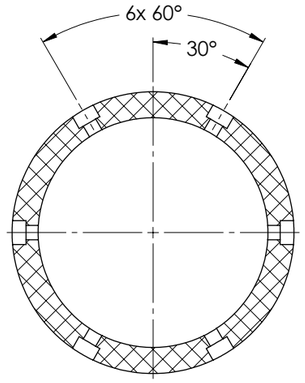

SECTION A-A

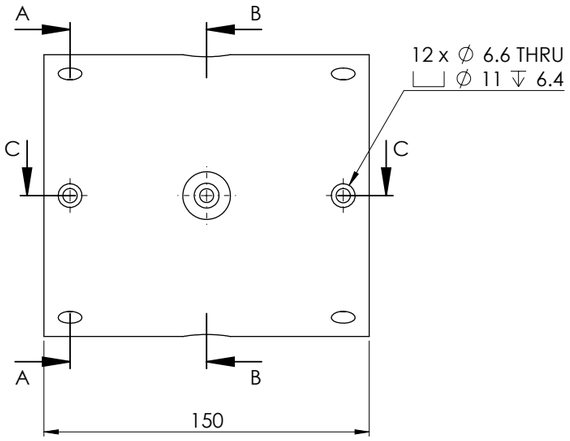

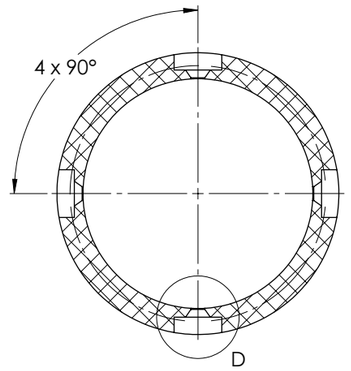

SECTION B-B

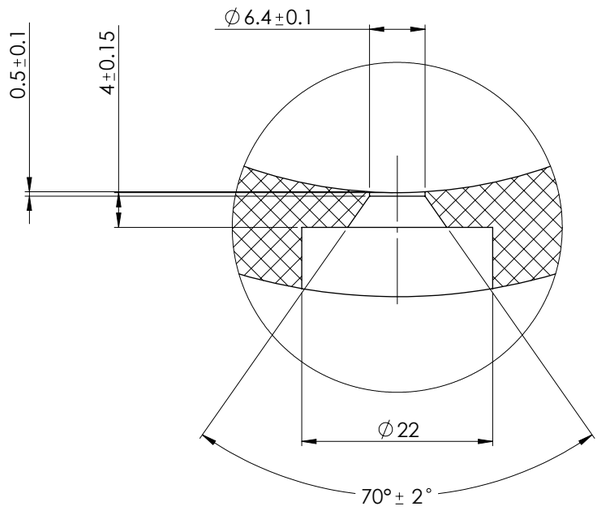

DETAIL D
SCALE 2 : 1

DRAWING STANDARD BS 8888:2020	DRAWN BY AP	**UNCONTROLLED IF PRINTED**	LURA LEEDS UNIVERSITY ROCKETRY ASSOCIATION
TOLERANCE STANDARD ISO 2768-mk	DRAWN DATE 31/10/23	BREAK ALL SHARP EDGES	ALL DIMENSIONS IN MM UNLESS STATED OTHERWISE
UNSPECIFIED FINISHES Ra 1.6	SIGNOFF BY TT	MATERIAL PE HIGH DENSITY	MASS (g) 511.62 / SCALE 1:2 / SHEET 1 OF 1 / A2
UNSPECIFIED THREADS BS 3643/2:1981 6H/6g	SIGNOFF DATE 31/10/23	DESCRIPTION AVIONICS BAY WALL	
		DRAWING # LP-0027	

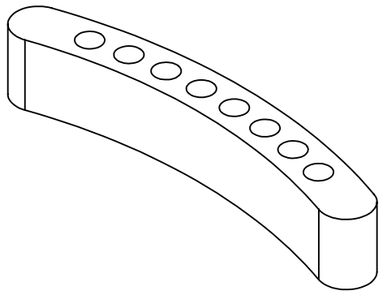

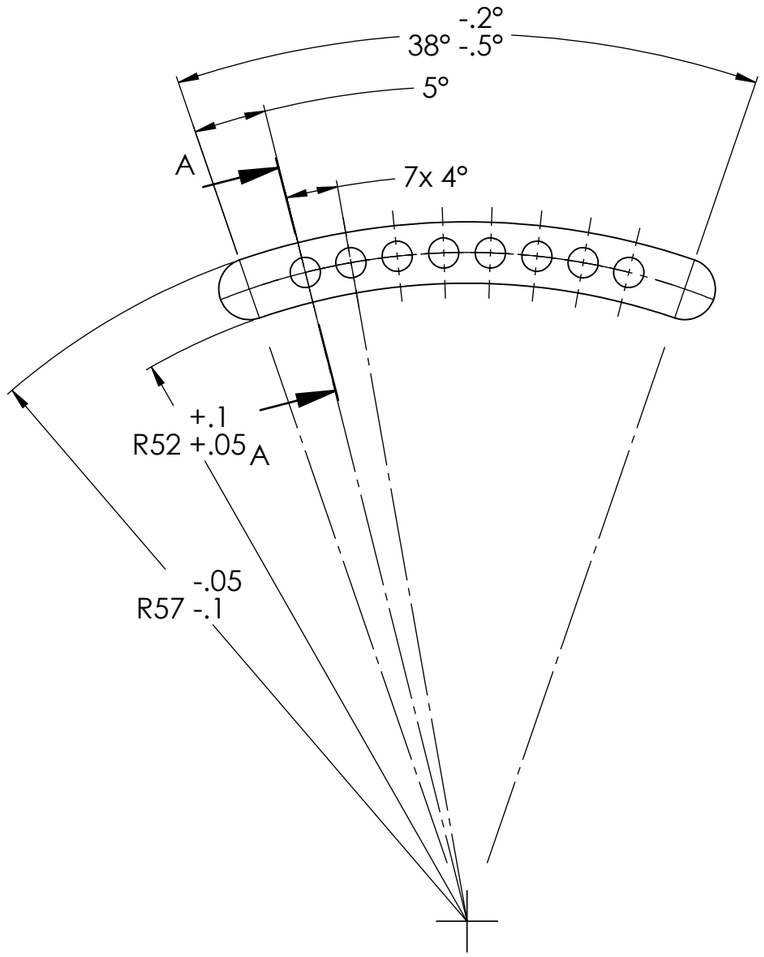

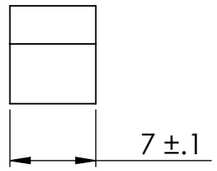

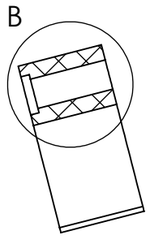

SECTION A-A

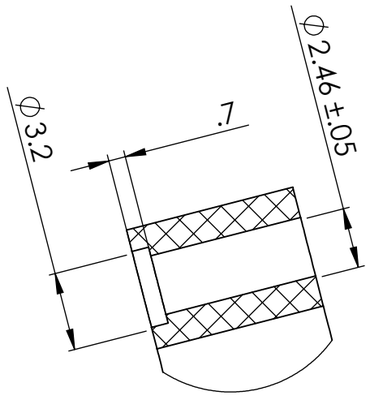

DETAIL B
SCALE 4 : 1

DRAWING STANDARD BS 8888:2020	DRAWN BY TT	**UNCONTROLLED IF PRINTED**	LURA LEEDS UNIVERSITY ROCKETRY ASSOCIATION
TOLERANCE STANDARD ISO 2768-mk	DRAWN DATE 30/10/23	BREAK ALL SHARP EDGES	
UNSPECIFIED FINISHES Ra 1.6	SIGNOFF BY TT	MATERIAL NYLON 66 (BLACK)	ALL DIMENSIONS IN MM UNLESS STATED OTHERWISE
UNSPECIFIED THREADS BS 3643/2:1981 6H/6g	SIGNOFF DATE 30/10/23	DESCRIPTION UNIVERSAL COUPLER CONNECTOR BODY	MASS (g) 1.29 · SCALE 2:1 · SHEET 1 OF 1 · A3
		DRAWING # LP-0016	

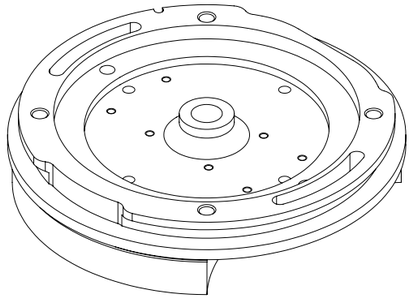

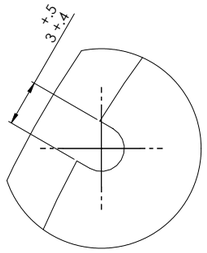

DETAIL B
SCALE 5 : 1

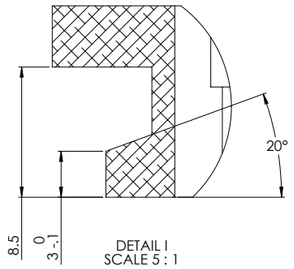

DETAIL I
SCALE 5 : 1

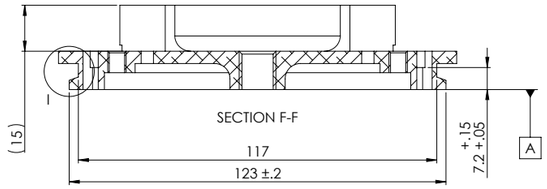

SECTION F-F

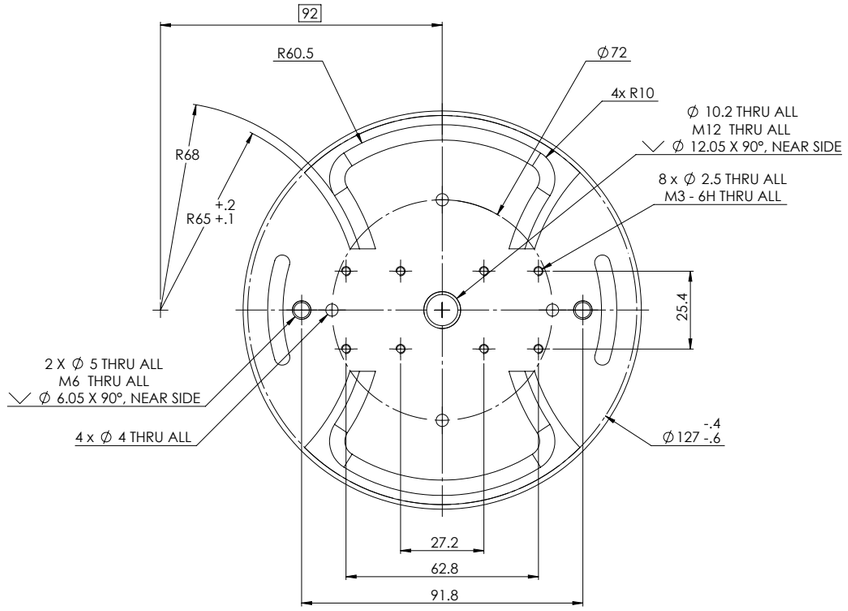

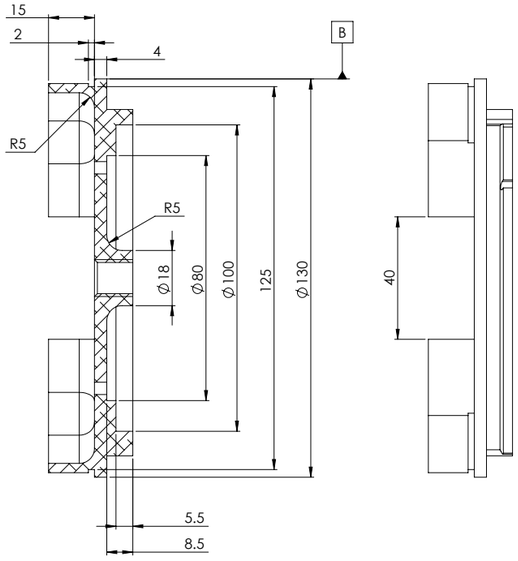

SECTION A-A

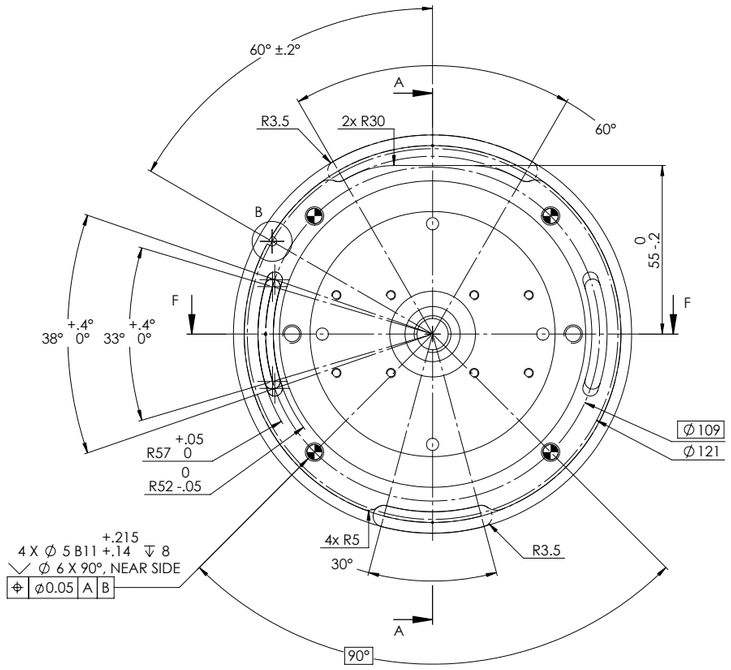

NOTES:

1. BEAD BLAST WITH #120 GRIT FOR UNIFORM MATTE TEXTURE THEN ANODISE IN ACCORDANCE WITH MIL-PRF-8625F 2020 ("ANODIC COATINGS FOR ALUMINUM AND ALUMINUM ALLOY"). THE FOLLOWING ANODISING REQUIREMENTS APPLY:
   - TYPE II, CLASS 2
   - 12 µm COATING THICKNESS
   - UNIFORMLY DYED VIOLET
   - INTERNAL THREADS ARE THE PREFERRED CONTACT LOCATIONS

DRAWING STANDARD BS 8888:2020	DRAWN BY TT	**UNCONTROLLED IF PRINTED**	LURA LEEDS UNIVERSITY ROCKET RY ASSOCIATION
TOLERANCE STANDARD ISO 2768-mk	DRAWN DATE 30/10/23	BREAK ALL SHARP EDGES	
UNSPECIFIED FINISHES Ra 1.6	SIGNOFF BY TT	MATERIAL 6061 ALLOY	ALL DIMENSIONS IN MM UNLESS STATED OTHERWISE
UNSPECIFIED THREADS BS 3643/2:1981 6H/6g	SIGNOFF DATE 30/10/23	DESCRIPTION RECOVERY BAY COUPLER	MASS (g) 268.39 · SCALE 1:1 · SHEET 1 OF 1 · A1
		DRAWING # LP-0034	

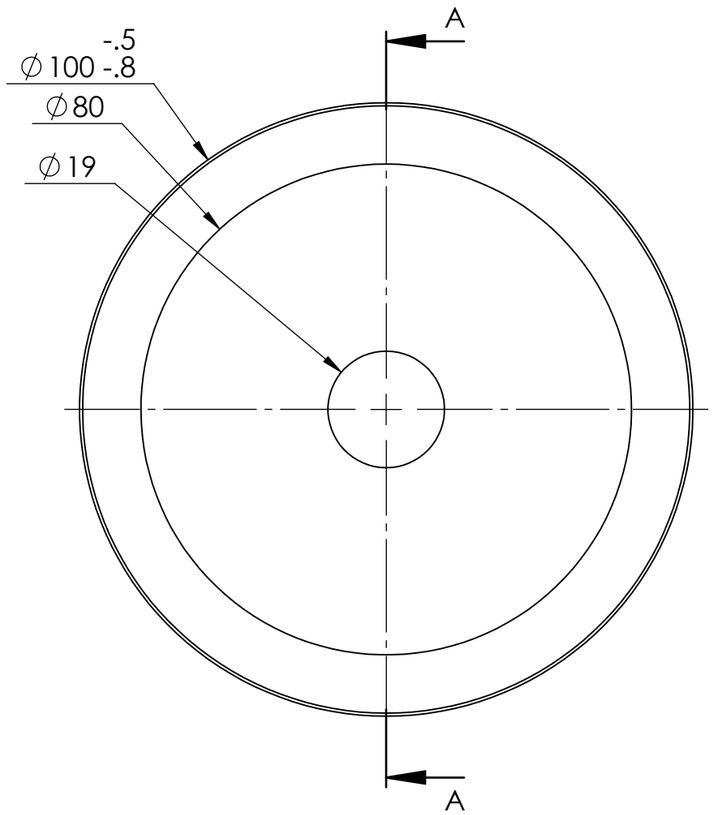

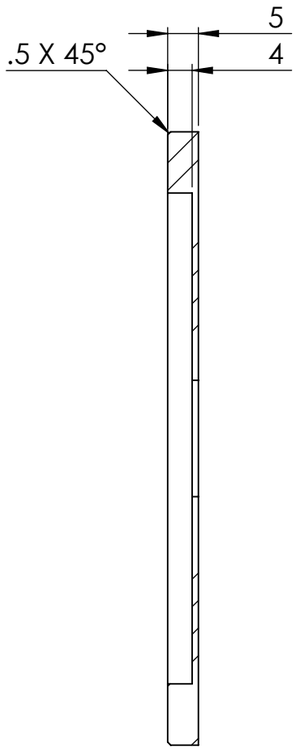

SECTION A-A

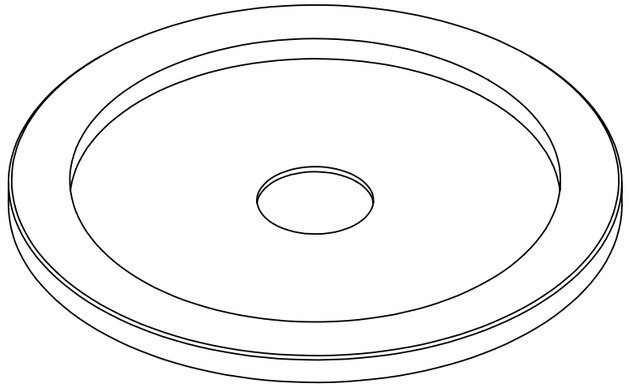

NOTES:

1. PART IS 3D PRINTED. DRAWNG PROVIDED FOR REFERENCE

DRAWING STANDARD BS 8888:2020	DRAWN BY TT	**UNCONTROLLED IF PRINTED**	LURA LEEDS UNIVERSITY ROCKETRY ASSOCIATION
TOLERANCE STANDARD ISO 2768-mk	DRAWN DATE 14/09/23	BREAK ALL SHARP EDGES	
UNSPECIFIED FINISHES Ra 1.6	SIGNOFF BY TT	MATERIAL PET	ALL DIMENSIONS IN MM UNLESS STATED OTHERWISE
UNSPECIFIED THREADS BS 3643/2:1981 6H/6g	SIGNOFF DATE 14/09/23	DESCRIPTION LOAD CELL AMPLIFIER CAP	MASS (g) 26.75 · SCALE 1:1 · SHEET 1 OF 1 · A3
		DRAWING # LP-0049	

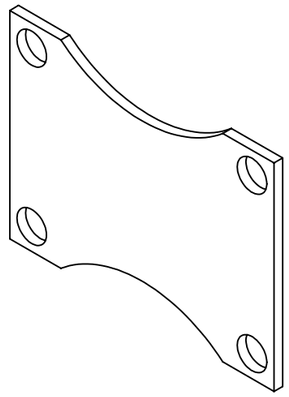

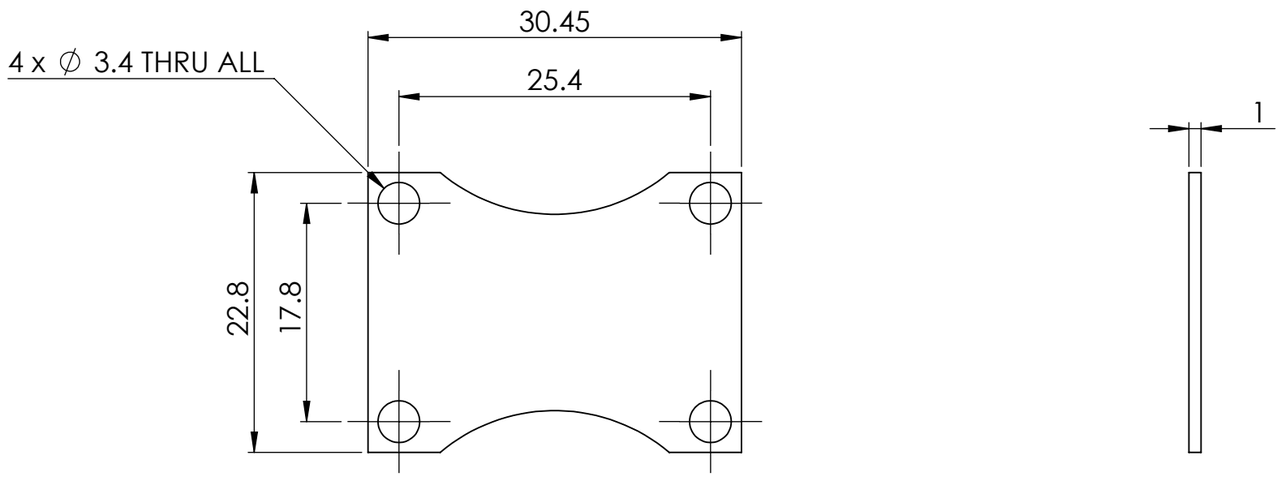

NOTES:

- PART 3D PRINTED. DIMENSIONS PROVIDED FOR REFERENCE

DRAWING STANDARD BS 8888:2020	DRAWN BY TT	**UNCONTROLLED IF PRINTED**	LURA LEEDS UNIVERSITY ROCKETRY ASSOCIATION
TOLERANCE STANDARD ISO 2768-mk	DRAWN DATE 14/09/23	BREAK ALL SHARP EDGES	ALL DIMENSIONS IN MM UNLESS STATED OTHERWISE
UNSPECIFIED FINISHES Ra 1.6	SIGNOFF BY TT	MATERIAL PET	MASS (g) 0.81 / SCALE 2:1 / SHEET 1 OF 1 / A3
UNSPECIFIED THREADS BS 3643/2:1981 6H/6g	SIGNOFF DATE 14/09/23	DESCRIPTION LOAD CELL AMPLIFIER ISOLATION PLATE	
		DRAWING # LP-0050	

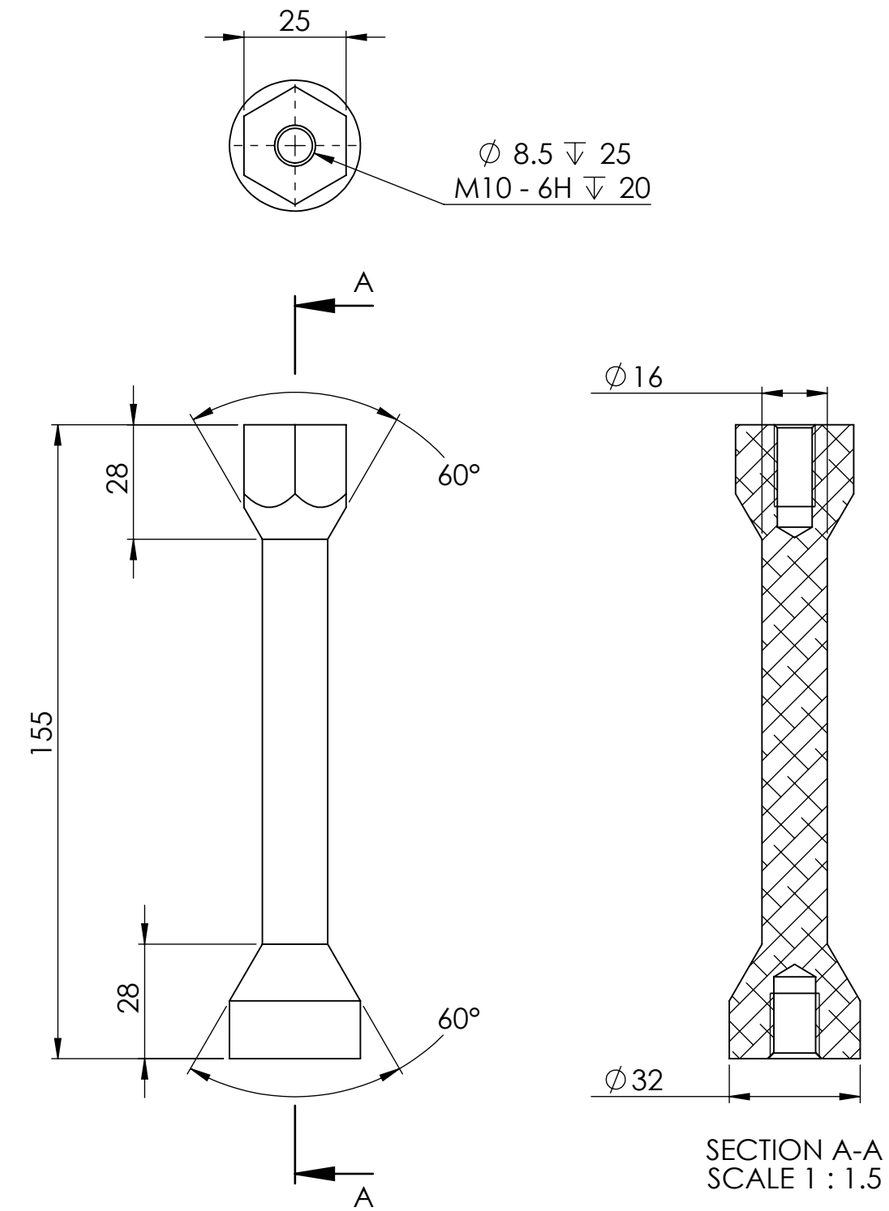

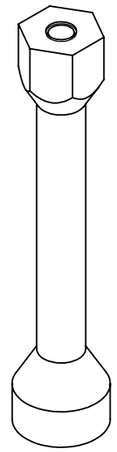

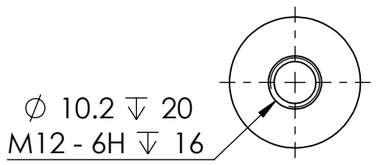

NOTES:

1. BEAD BLAST WITH #120 GRIT FOR UNIFORM MATTE TEXTURE THEN ANODISE IN ACCORDANCE WITH MIL-PRF-8625F 2020 ("ANODIC COATINGS FOR ALUMINUM AND ALUMINUM ALLOY"). THE FOLLOWING ANODISING REQUIREMENTS APPLY:
   - TYPE II, CLASS 2
   - 12 µm COATING THICKNESS
   - UNIFORMLY DYED VIOLET
   - INTERNAL THREADS ARE THE PREFERRED CONTACT LOCATIONS

DRAWING STANDARD BS 8888:2020	DRAWN BY AK	**UNCONTROLLED IF PRINTED**	LURA LEEDS UNIVERSITY ROCKETRY ASSOCIATION
TOLERANCE STANDARD ISO 2768-mk	DRAWN DATE 03/09/23	BREAK ALL SHARP EDGES	ALL DIMENSIONS IN MM UNLESS STATED OTHERWISE
UNSPECIFIED FINISHES Ra 1.6	SIGNOFF BY TT	MATERIAL 6061 ALLOY	MASS (g) 129.74 / SCALE 1:1.5 / SHEET 1 OF 1 / A3
UNSPECIFIED THREADS BS 3643/2:1981 6H/6g	SIGNOFF DATE 05/09/23	DESCRIPTION EYEBOLT EXTENSION BAR	
		DRAWING # LP-0035	

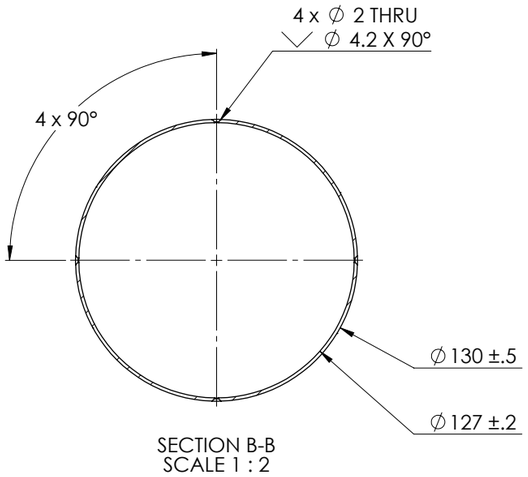

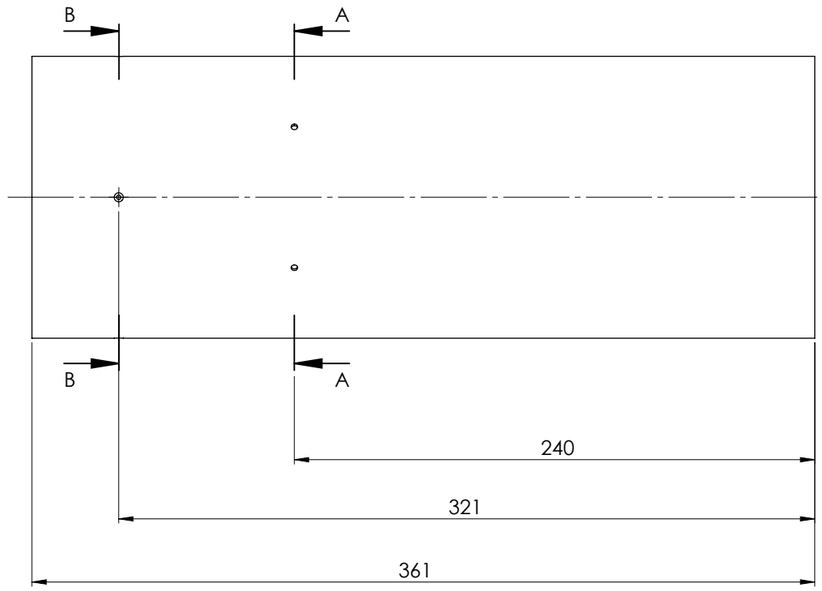

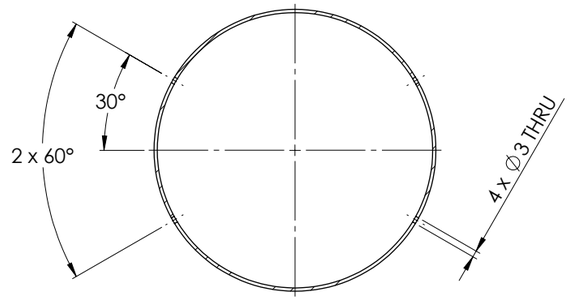

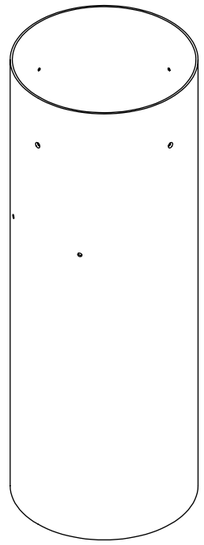

DRAWING STANDARD BS 8888:2020	DRAWN BY AK	**UNCONTROLLED IF PRINTED**	LURA LEEDS UNIVERSITY ROCKETRY ASSOCIATION
TOLERANCE STANDARD ISO 2768-mk	DRAWN DATE 30/10/23	BREAK ALL SHARP EDGES	
UNSPECIFIED FINISHES Ra 6.3	SIGNOFF BY TT	MATERIAL CARBON FIBER	ALL DIMENSIONS IN MM UNLESS STATED OTHERWISE
UNSPECIFIED THREADS BS 3643/2:1981 6H/6g	SIGNOFF DATE 30/10/23	DESCRIPTION RECOVERY BAY TUBE	MASS (g) 345.26 · SCALE 1:2 · SHEET 1 OF 1 · A2
		DRAWING # LP-0033	

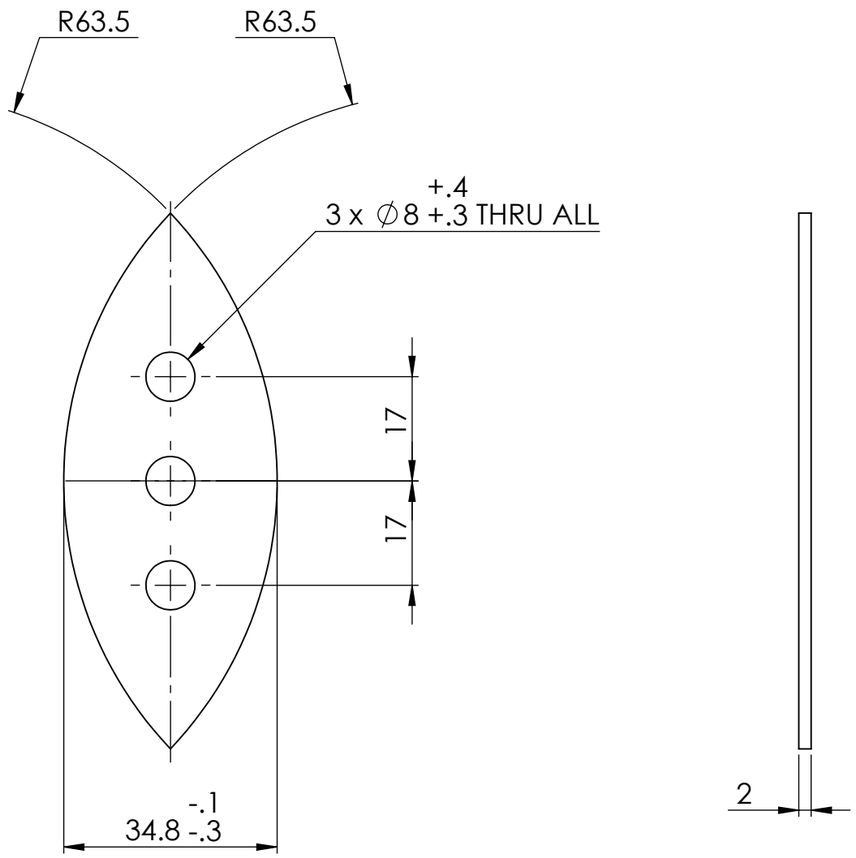

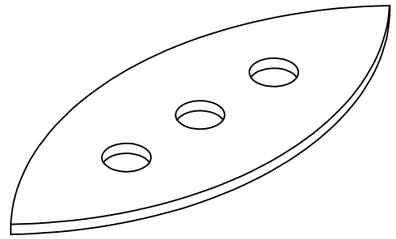

DRAWING STANDARD BS 8888:2020	DRAWN BY AK	**UNCONTROLLED IF PRINTED**	LURA LEEDS UNIVERSITY ROCKETRY ASSOCIATION
TOLERANCE STANDARD ISO 2768-mk	DRAWN DATE 27/09/23	BREAK ALL SHARP EDGES MATERIAL CARBON FIBER	ALL DIMENSIONS IN MM UNLESS STATED OTHERWISE
UNSPECIFIED FINISHES Ra 50	SIGNOFF BY TT	DESCRIPTION MOON BAY VERTEBRA	MASS (g) 6.13 / SCALE 1:1 / SHEET 1 OF 1 / A3
UNSPECIFIED THREADS BS 3643/2:1981 6H/6g	SIGNOFF DATE 27/09/23	DRAWING # LP-0039	

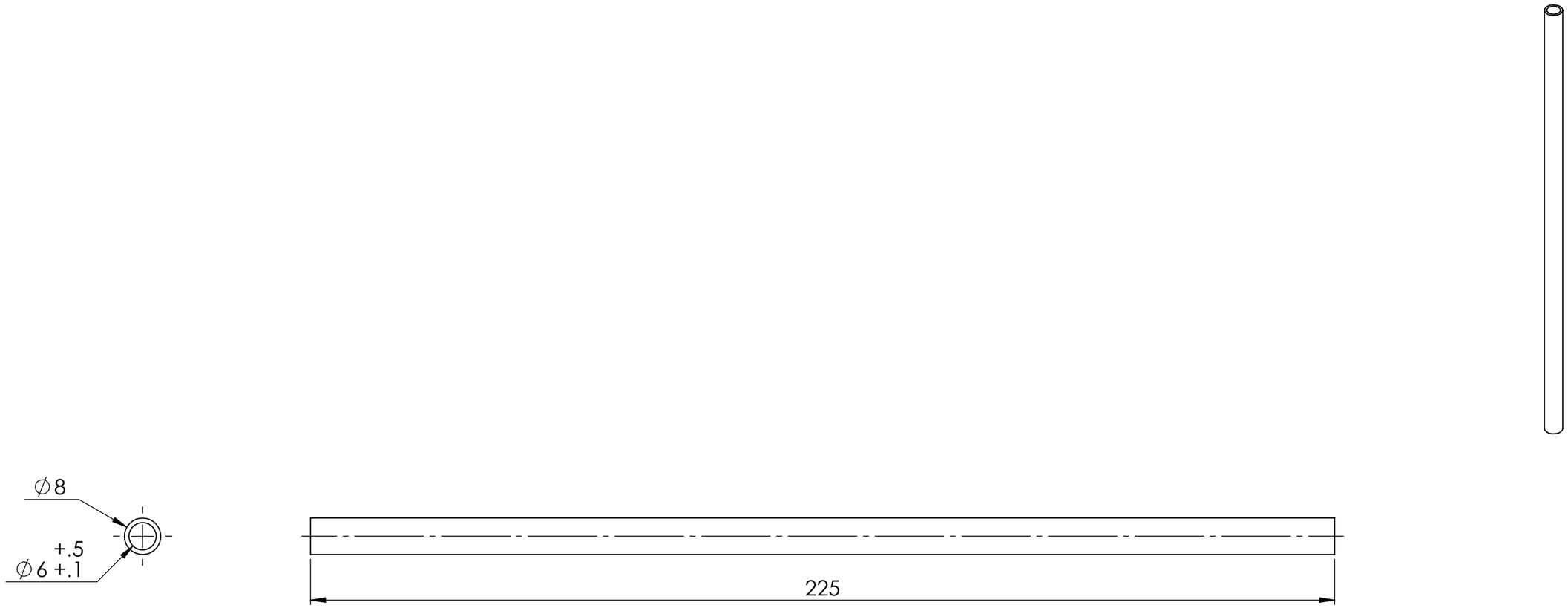

DRAWING STANDARD BS 8888:2020	DRAWN BY AK	**UNCONTROLLED IF PRINTED**	LURA LEEDS UNIVERSITY ROCKETRY ASSOCIATION
TOLERANCE STANDARD ISO 2768-mk	DRAWN DATE 03/09/23	BREAK ALL SHARP EDGES MATERIAL CARBON FIBER	ALL DIMENSIONS IN MM UNLESS STATED OTHERWISE
UNSPECIFIED FINISHES Ra 1.6	SIGNOFF BY TT	DESCRIPTION MOON BAY ROD CONDUIT	MASS (g) 9.90 · SCALE 1:1 · SHEET 1 OF 1 · A3
UNSPECIFIED THREADS BS 3643/2:1981 6H/6g	SIGNOFF DATE 05/09/23	DRAWING # LP-0037	

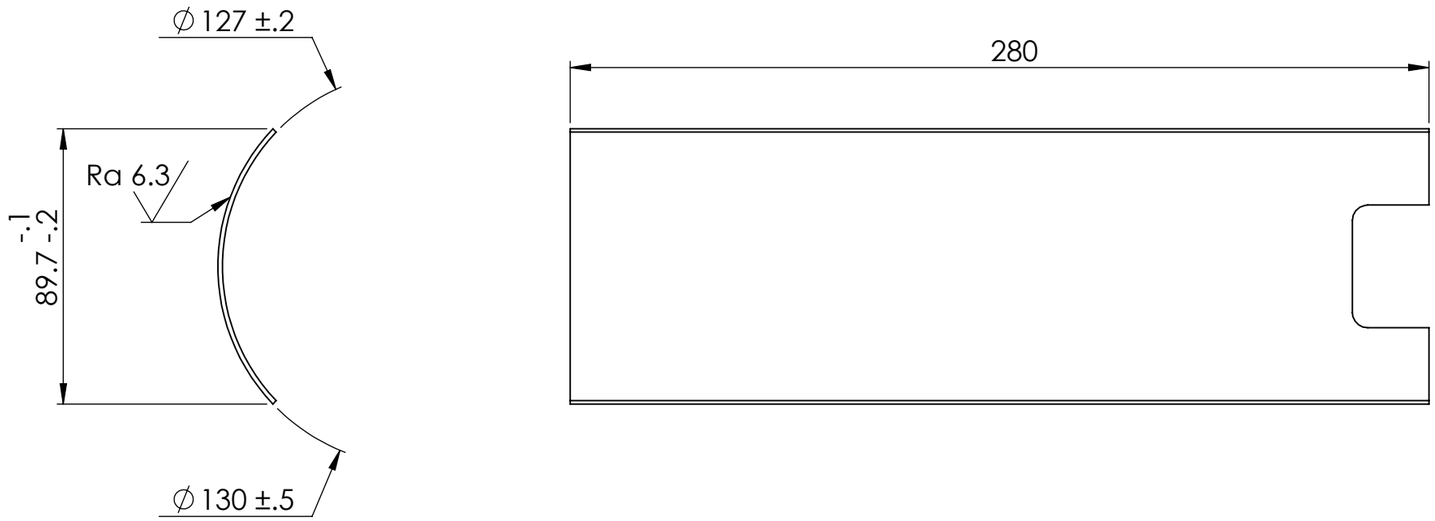

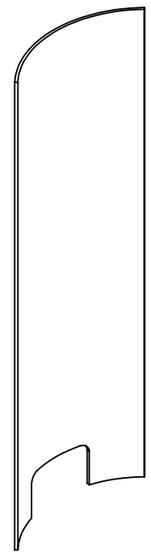

DRAWING STANDARD BS 8888:2020	DRAWN BY AK	**UNCONTROLLED IF PRINTED**	LURA LEEDS UNIVERSITY ROCKETRY ASSOCIATION
TOLERANCE STANDARD ISO 2768-mk	DRAWN DATE 30/10/23	BREAK ALL SHARP EDGES	
UNSPECIFIED FINISHES Ra 50	SIGNOFF BY TT	MATERIAL CARBON FIBER	ALL DIMENSIONS IN MM UNLESS STATED OTHERWISE
UNSPECIFIED THREADS BS 3643/2:1981 6H/6g	SIGNOFF DATE 30/10/23	DESCRIPTION MOON BAY SHELL	MASS (g) 62.52 · SCALE 1:2 · SHEET 1 OF 1 · A3
		DRAWING # LP-0036	

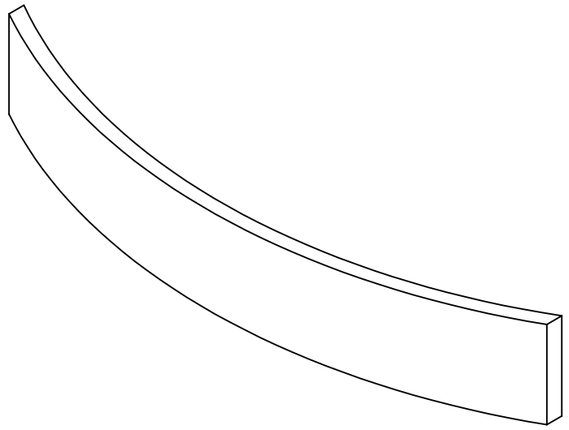

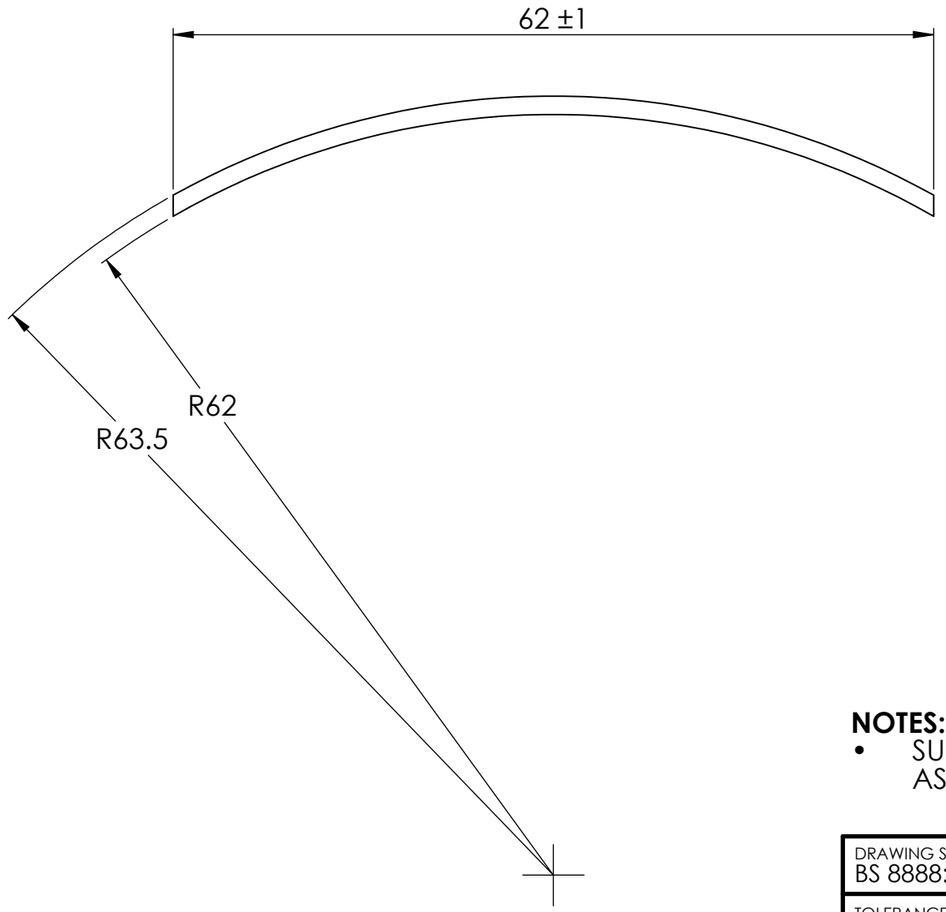

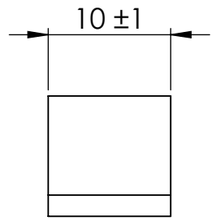

NOTES:

- SUGGESTED MANUFACTURE FROM LP-0036 OFF-CUT (SHOULD BEND TO FIT ASSEMBLY)

DRAWING STANDARD BS 8888:2020	DRAWN BY TT	**UNCONTROLLED IF PRINTED**	LURA LEEDS UNIVERSITY ROCKETRY ASSOCIATION
TOLERANCE STANDARD ISO 2768-mk	DRAWN DATE 08/04/24	BREAK ALL SHARP EDGES MATERIAL CARBON FIBER	ALL DIMENSIONS IN MM UNLESS STATED OTHERWISE
UNSPECIFIED FINISHES Ra 1.6	SIGNOFF BY TT	DESCRIPTION ANTI-KICKBACK TAB	MASS (g) 1.54 / SCALE 2:1 / SHEET 1 OF 1 / A3
UNSPECIFIED THREADS BS 3643/2:1981 6H/6g	SIGNOFF DATE 08/04/24	DRAWING # LP-0088	

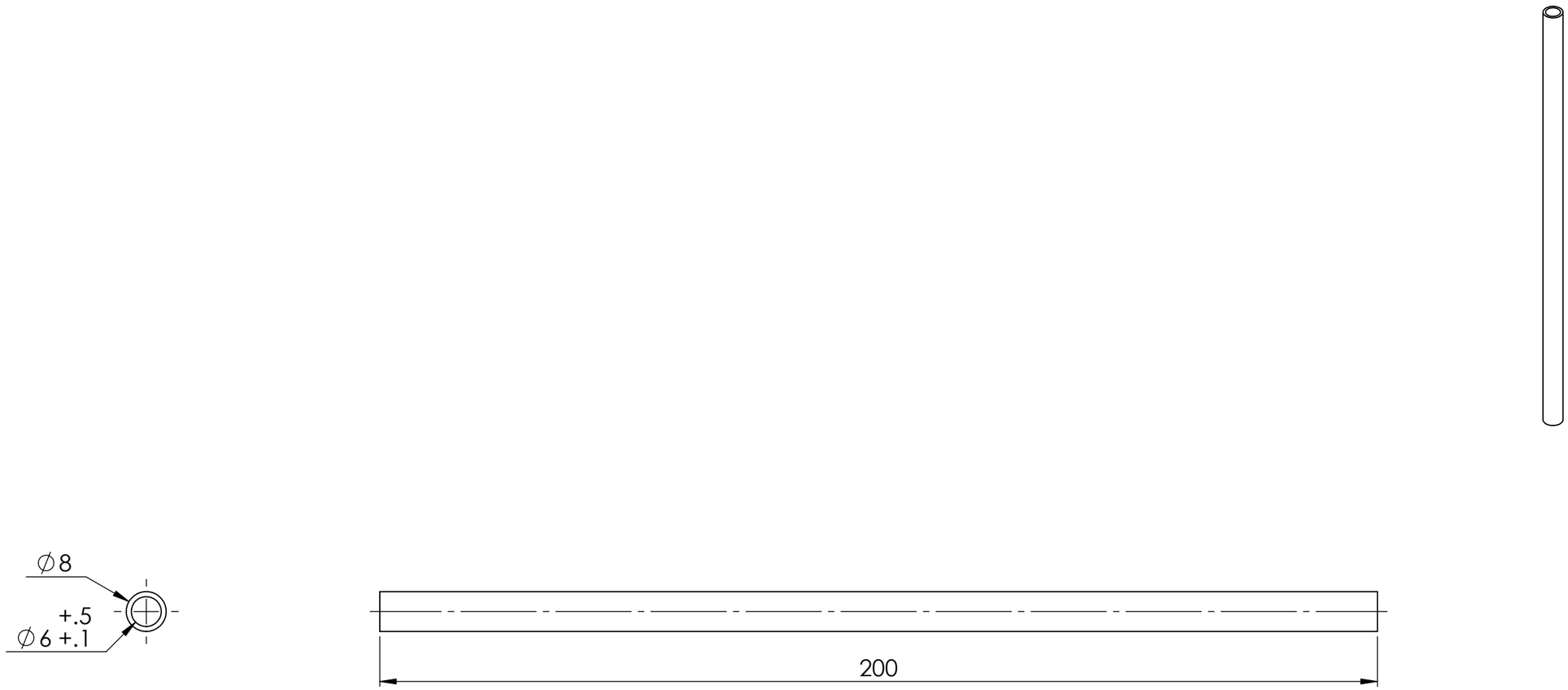

DRAWING STANDARD BS 8888:2020	DRAWN BY AK	**UNCONTROLLED IF PRINTED**	LURA LEEDS UNIVERSITY ROCKETRY ASSOCIATION
TOLERANCE STANDARD ISO 2768-mk	DRAWN DATE 03/09/23	BREAK ALL SHARP EDGES	ALL DIMENSIONS IN MM UNLESS STATED OTHERWISE
UNSPECIFIED FINISHES Ra 1.6	SIGNOFF BY TT	MATERIAL CARBON FIBER	MASS (g) 6.95 / SCALE 1:1 / SHEET 1 OF 1 / A3
UNSPECIFIED THREADS BS 3643/2:1981 6H/6g	SIGNOFF DATE 05/09/23	DESCRIPTION MOON BAY CABLE CONDUIT	
		DRAWING # LP-0038	

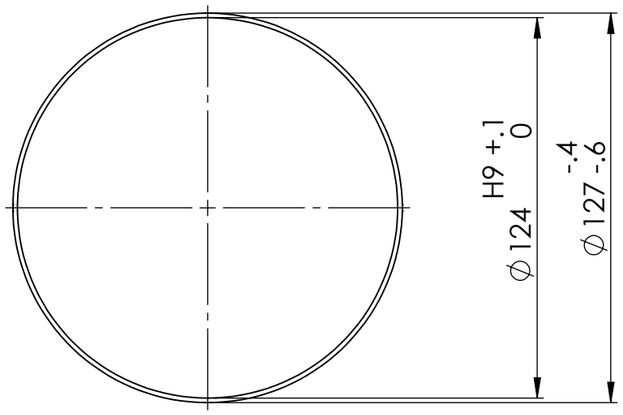

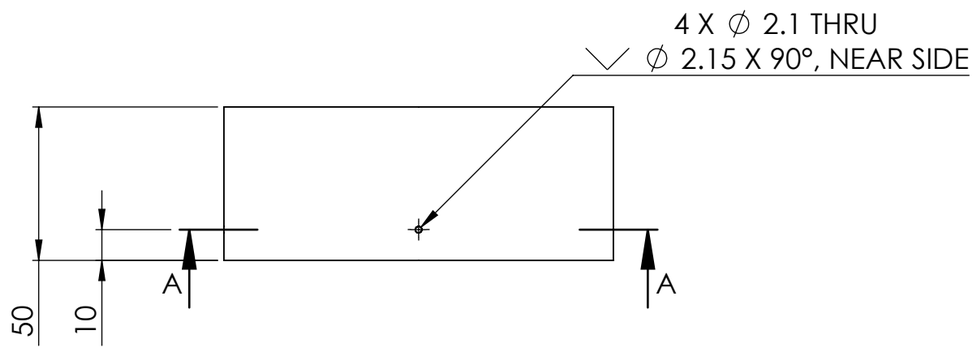

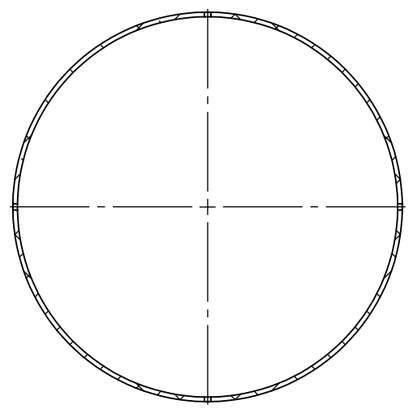

SECTION A-A

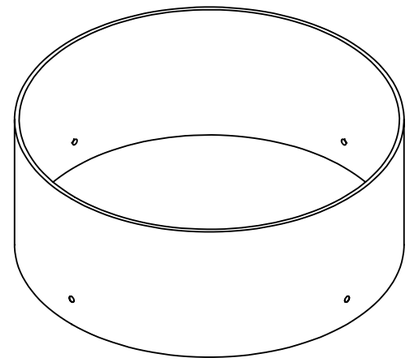

NOTES:

1. BEAD BLAST WITH #120 GRIT FOR UNIFORM MATTE TEXTURE THEN ANODISE IN ACCORDANCE WITH MIL-PRF-8625F 2020 ("ANODIC COATINGS FOR ALUMINUM AND ALUMINUM ALLOY"). THE FOLLOWING ANODISING REQUIREMENTS APPLY:
   - TYPE II, CLASS 2
   - 12 µm COATING THICKNESS
   - UNIFORMLY DYED VIOLET
   - INTERNAL THREADS ARE THE PREFERRED CONTACT LOCATIONS

DRAWING STANDARD BS 8888:2020	DRAWN BY AK	**UNCONTROLLED IF PRINTED**	LURA LEEDS UNIVERSITY ROCKETRY ASSOCIATION
TOLERANCE STANDARD ISO 2768-mk	DRAWN DATE 31/10/23	BREAK ALL SHARP EDGES	
UNSPECIFIED FINISHES Ra 1.6	SIGNOFF BY TT	MATERIAL 6061 ALLOY	ALL DIMENSIONS IN MM UNLESS STATED OTHERWISE
UNSPECIFIED THREADS BS 3643/2:1981 6H/6g	SIGNOFF DATE 31/20/23	DESCRIPTION REINFORCEMENT TUBE	MASS (g) 79.78 · SCALE 1:2 · SHEET 1 OF 1 · A3
		DRAWING # LP-0045	

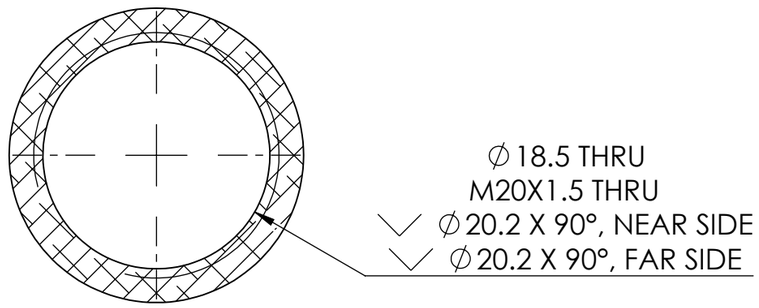

SECTION B-B

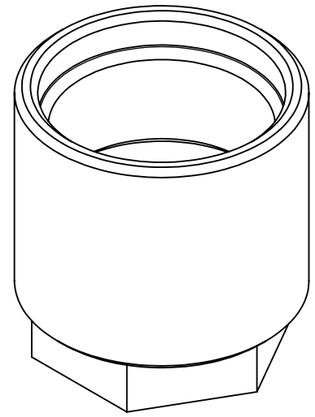

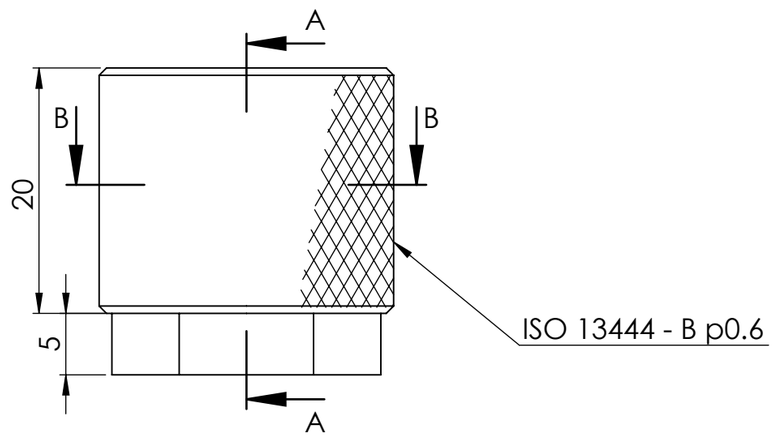

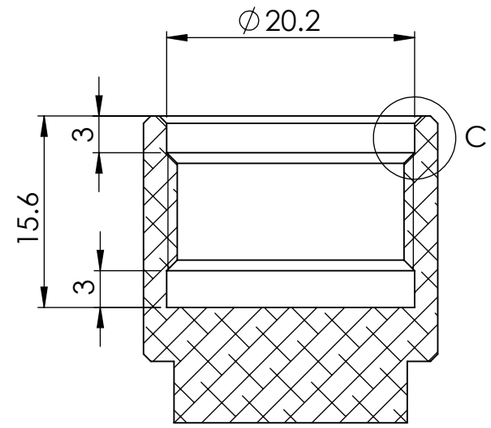

SECTION A-A

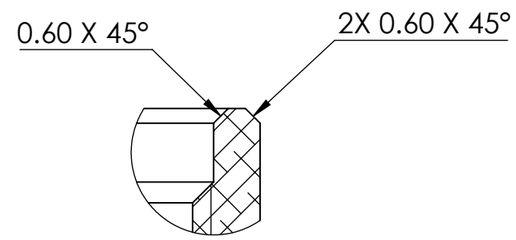

DETAIL C
SCALE 4 : 1

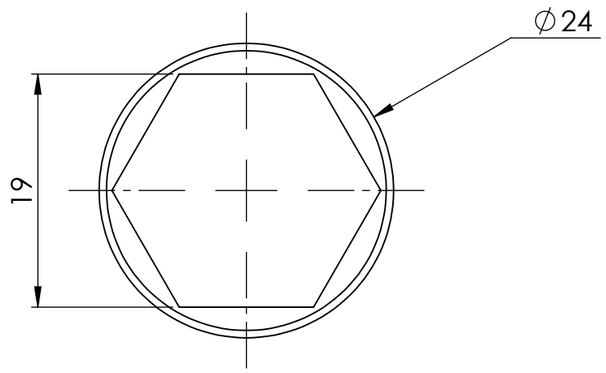

NOTES:

1. BEAD BLAST WITH #120 GRIT FOR UNIFORM MATTE TEXTURE THEN ANODISE IN ACCORDANCE WITH MIL-PRF-8625F 2020 ("ANODIC COATINGS FOR ALUMINUM AND ALUMINUM ALLOY"). THE FOLLOWING ANODISING REQUIREMENTS APPLY:
   - TYPE II, CLASS 2
   - 12 µm COATING THICKNESS
   - UNIFORMLY DYED VIOLET
   - INTERNAL THREADS ARE THE PREFERRED CONTACT LOCATION

DRAWING STANDARD BS 8888:2020	DRAWN BY JL	UNCONTROLLED IF PRINTED	LURA LEEDS UNIVERSITY ROCKETRY ASSOCIATION
TOLERANCE STANDARD ISO 2768-mk	DRAWN DATE 20/02/24	BREAK ALL SHARP EDGES	ALL DIMENSIONS IN MM UNLESS STATED OTHERWISE
UNSPECIFIED FINISHES Ra 1.6	SIGNOFF BY TT	MATERIAL 6061 ALLOY	MASS (g) 16.27 / SCALE 2:1 / SHEET 1 OF 1 / A3
UNSPECIFIED THREADS BS 3643/2:1981 6H/6g	SIGNOFF DATE 20/02/24	DESCRIPTION MOONBAY BLOCK CAP	
		DRAWING # LP-0080	

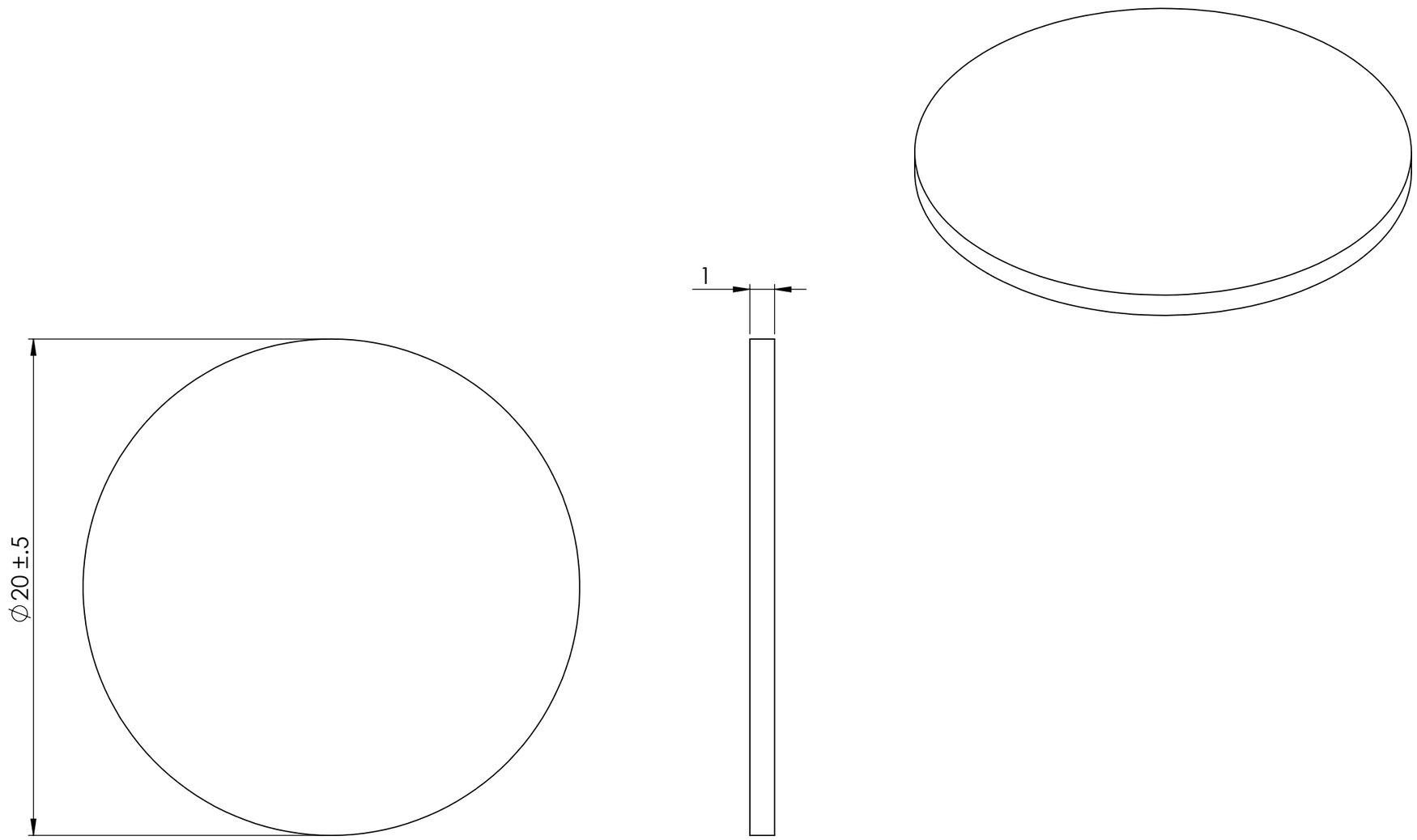

DRAWING STANDARD BS 8888:2020	DRAWN BY TT	**UNCONTROLLED IF PRINTED**	LURA LEEDS UNIVERSITY ROCKETRY ASSOCIATION
TOLERANCE STANDARD ISO 2768-mk	DRAWN DATE 07/04/24	BREAK ALL SHARP EDGES MATERIAL NEOPRENE	ALL DIMENSIONS IN MM UNLESS STATED OTHERWISE
UNSPECIFIED FINISHES Ra 1.6	SIGNOFF BY TT	DESCRIPTION MOON BAY BLOCK CHARGE PLUG GASKET	MASS (g) 0.41 · SCALE 5:1 · SHEET 1 OF 1 · A3
UNSPECIFIED THREADS BS 3643/2:1981 6H/6g	SIGNOFF DATE 07/04/24	DRAWING # LP-0081	

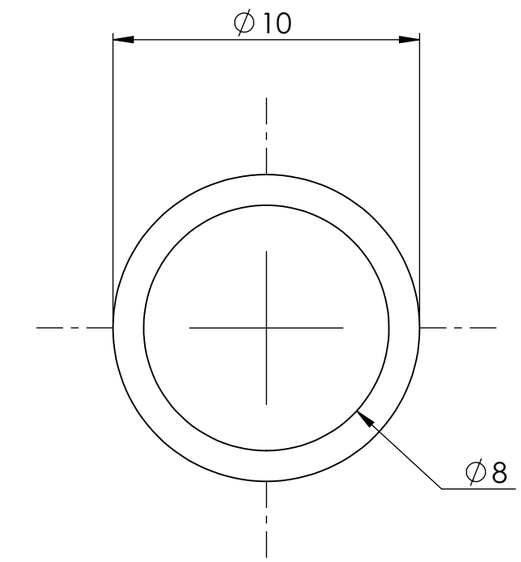

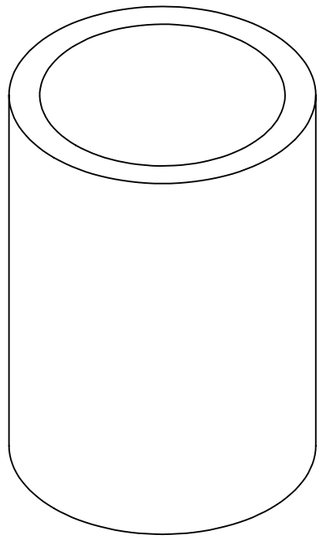

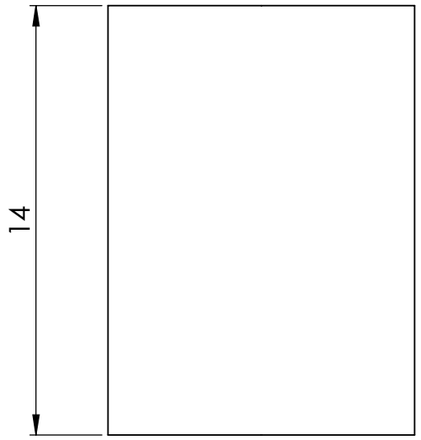

DRAWING STANDARD BS 8888:2020	DRAWN BY JL	**UNCONTROLLED IF PRINTED**	LURA LEEDS UNIVERSITY ROCKETRY ASSOCIATION
TOLERANCE STANDARD ISO 2768-mk	DRAWN DATE 13/03/24	BREAK ALL SHARP EDGES MATERIAL PET	ALL DIMENSIONS IN MM UNLESS STATED OTHERWISE
UNSPECIFIED FINISHES Ra 1.6	SIGNOFF BY TT	DESCRIPTION ROPE CUTTER INSERT	MASS (g) 0.56 · SCALE 5:1 · SHEET 1 OF 1 · A3
UNSPECIFIED THREADS BS 3643/2:1981 6H/6g	SIGNOFF DATE 07/04/24	DRAWING # LP-0086	

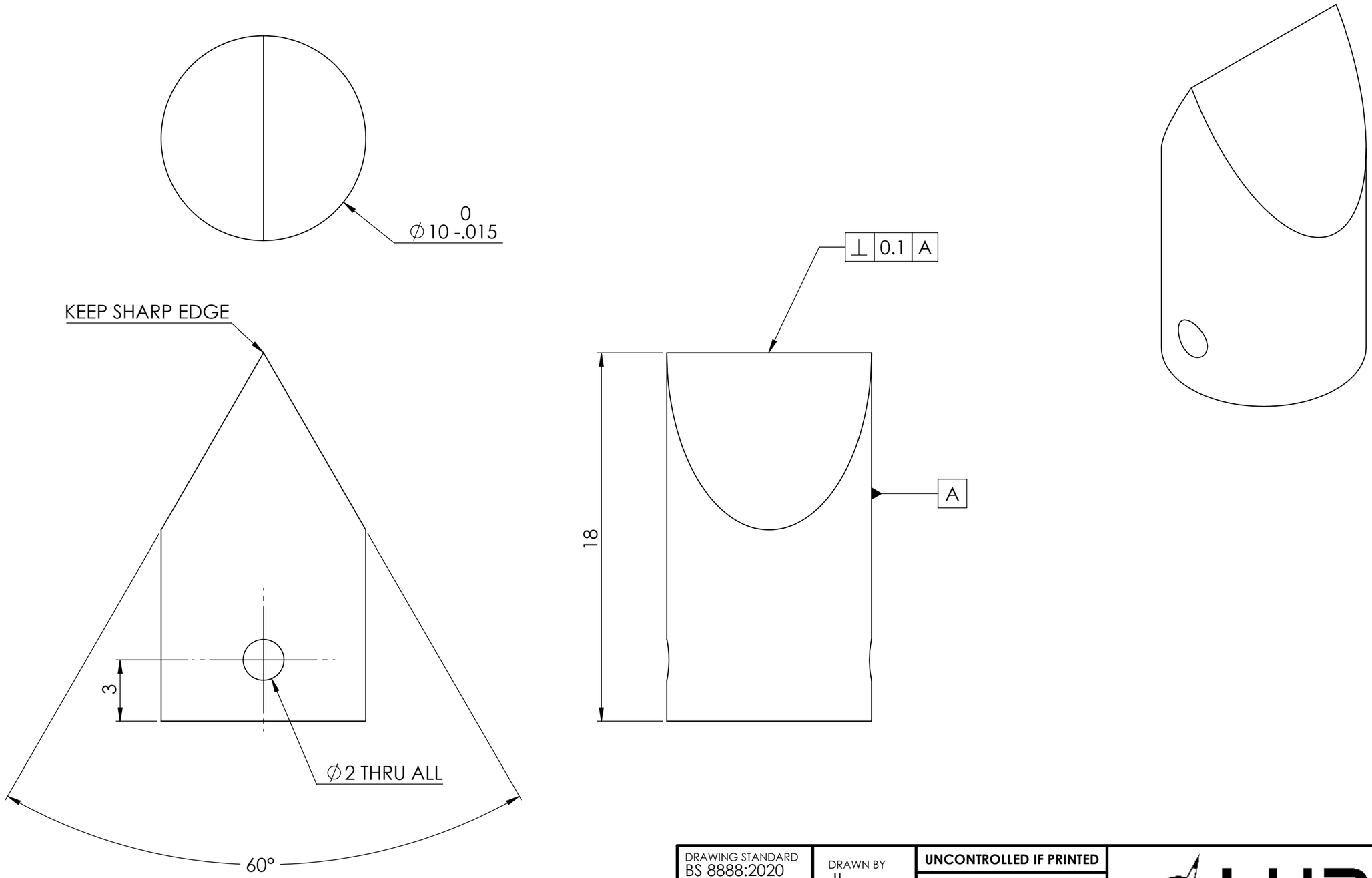

DRAWING STANDARD BS 8888:2020	DRAWN BY JL	**UNCONTROLLED IF PRINTED**	LURA LEEDS UNIVERSITY ROCKETRY ASSOCIATION
TOLERANCE STANDARD ISO 2768-mk	DRAWN DATE 20/02/24	BREAK ALL SHARP EDGES	
UNSPECIFIED FINISHES Ra 1.6	SIGNOFF BY TT	MATERIAL AISI TYPE D2 TOOL STEEL	ALL DIMENSIONS IN MM UNLESS STATED OTHERWISE
UNSPECIFIED THREADS BS 3643/2:1981 6H/6g	SIGNOFF DATE 20/02/24	DESCRIPTION RC BLADE	MASS (g) 8.60 · SCALE 5:1 · SHEET 1 OF 1 · A3
		DRAWING # LP-0078	

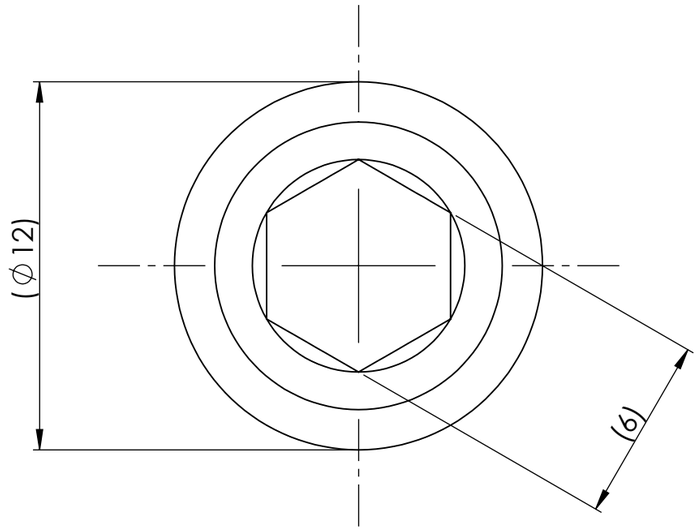

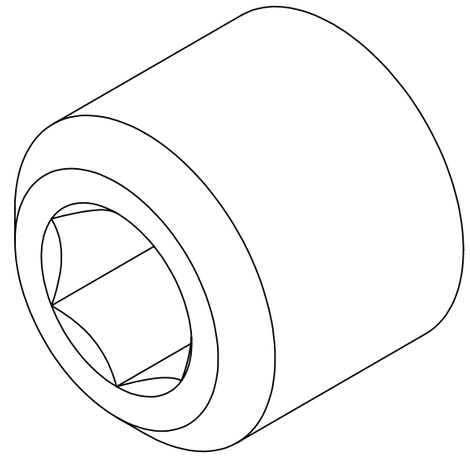

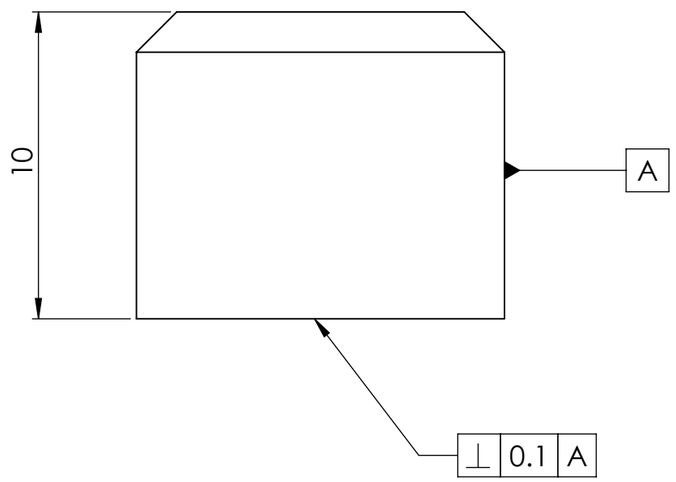

NOTES:

- MODIFIED M12 X 12MM FLAT POINT GRUB SCREW WITH 1.75MM PITCH

DRAWING STANDARD BS 8888:2020	DRAWN BY DB	**UNCONTROLLED IF PRINTED**	LURA LEEDS UNIVERSITY ROCKETRY ASSOCIATION
TOLERANCE STANDARD ISO 2768-mk	DRAWN DATE 30/10/23	BREAK ALL SHARP EDGES	
UNSPECIFIED FINISHES Ra 1.6	SIGNOFF BY TT	MATERIAL AISI 304	ALL DIMENSIONS IN MM UNLESS STATED OTHERWISE
UNSPECIFIED THREADS BS 3643/2:1981 6H/6g	SIGNOFF DATE 31/10/23	DESCRIPTION ROPE CUTTER ANVIL	MASS (g) 7.4865 · SCALE 5:1 · SHEET 1 OF 1 · A3
		DRAWING # LP-0077	

SOLIDWORKS Educational Product. For Instructional Use Only.

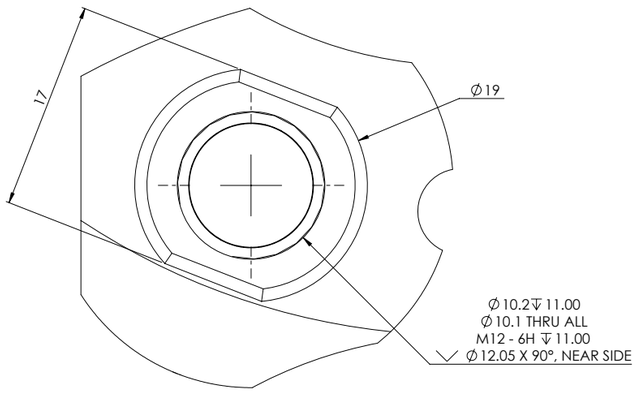

DETAIL A
SCALE 4 : 1

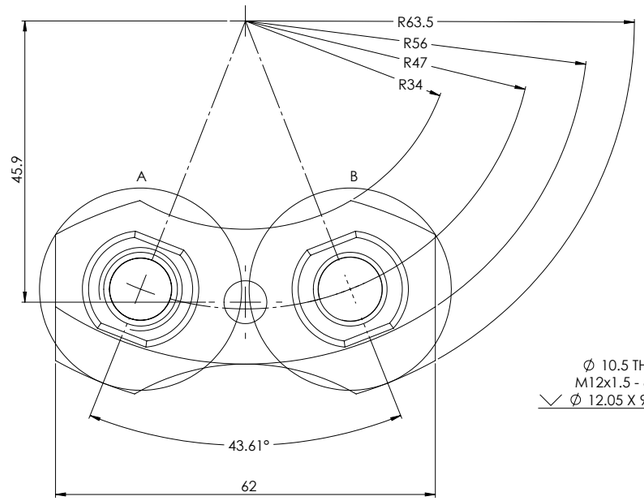

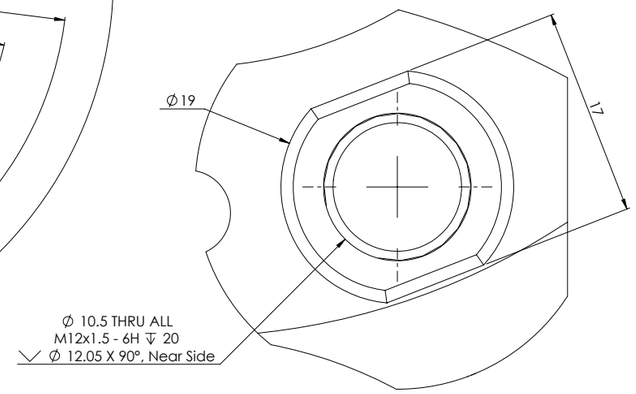

DETAIL B
SCALE 4 : 1

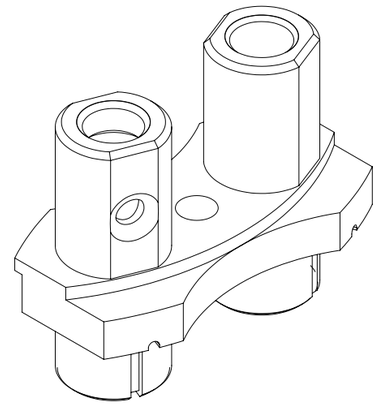

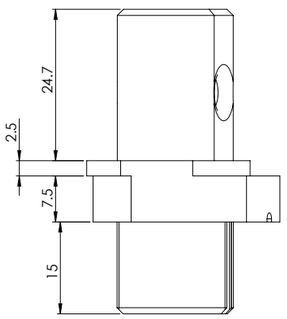

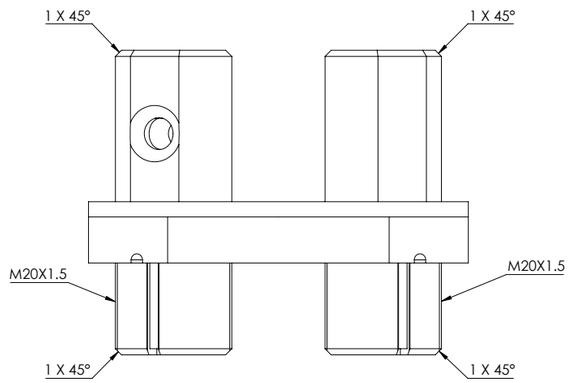

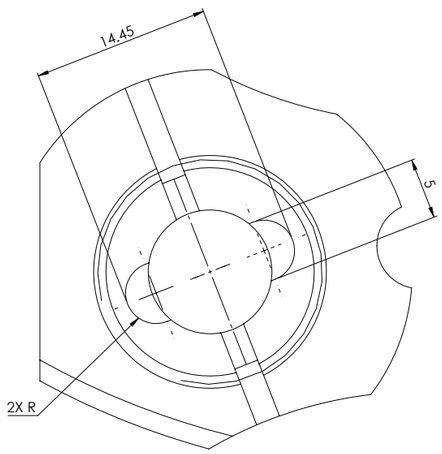

DETAIL C
SCALE 4 : 1

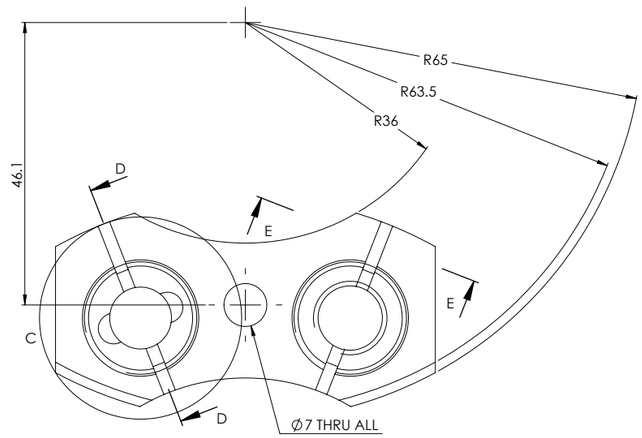

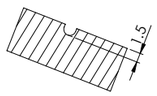

SECTION E-E

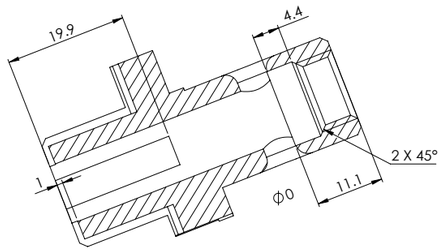

SECTION D-D

NOTES:

1. BEAD BLAST WITH #120 GRIT FOR UNIFORM MATTE TEXTURE THEN ANODISE IN ACCORDANCE WITH MIL-PRF-8625F 2020 ("ANODIC COATINGS FOR ALUMINUM AND ALUMINUM ALLOY"). THE FOLLOWING ANODISING REQUIREMENTS APPLY:
   - TYPE II, CLASS 2
   - 12 µm COATING THICKNESS
   - UNIFORMLY DYED VIOLET
   - INTERNAL THREADS ARE THE PREFERRED CONTACT LOCATION

DRAWING STANDARD BS 8888:2020	DRAWN BY JL	UNCONTROLLED IF PRINTED	LURA LEEDS UNIVERSITY ROCKETRY ASSOCIATION
TOLERANCE STANDARD ISO 2768-mk	DRAWN DATE 20/02/24	BREAK ALL SHARP EDGES	
UNSPECIFIED FINISHES Ra 1.6	SIGNOFF BY TT	MATERIAL 6061 ALLOY	ALL DIMENSIONS IN MM UNLESS STATED OTHERWISE
UNSPECIFIED THREADS BS 3643/2:1981 6H/6g	SIGNOFF DATE 20/02/24	DESCRIPTION MOONBAY BLOCK	MASS (g) 72.63 · SCALE 2:1 · SHEET 1 OF 1 · A1
		DRAWING # LP-0075	

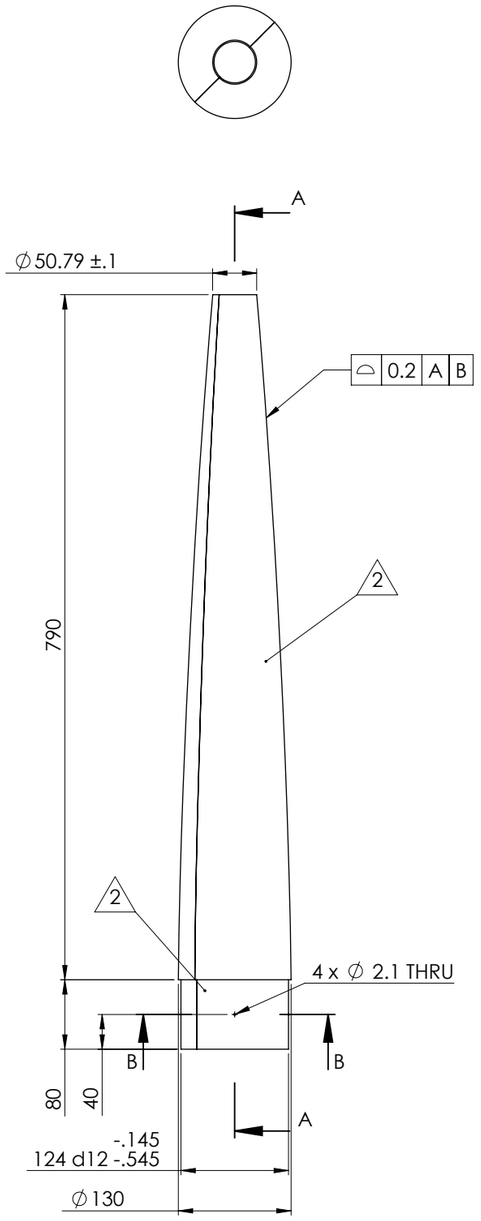

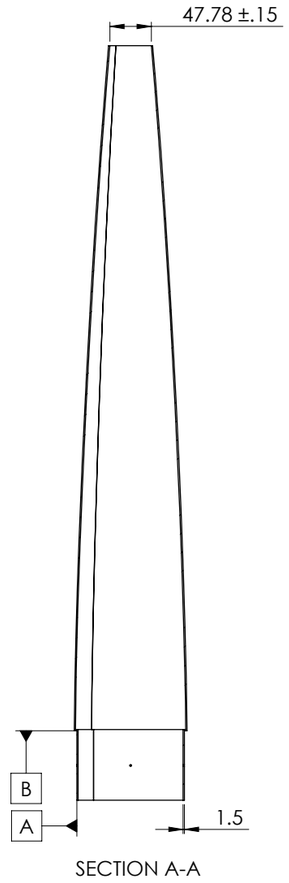

SECTION A-A

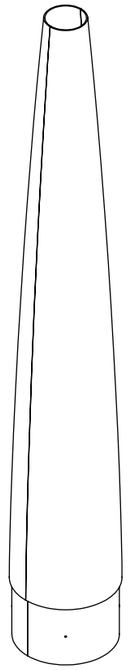

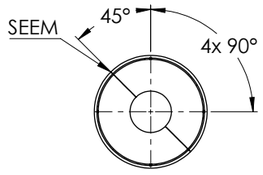

SECTION B-B

NOTES:

1. REFER TO SOLID MODEL FOR UNSPECIFIED GEOMETRY

2 INDICATED SURFACES TO Ra 6.3

DRAWING STANDARD BS 8888:2020	DRAWN BY TT	UNCONTROLLED IF PRINTED	LURA LEEDS UNIVERSITY ROCKETRY ASSOCIATION
TOLERANCE STANDARD ISO 2768-mk	DRAWN DATE 27/09/23	BREAK ALL SHARP EDGES	
UNSPECIFIED FINISHES Ra 50	SIGNOFF BY TT	MATERIAL CARBON FIBRE	ALL DIMENSIONS IN MM UNLESS STATED OTHERWISE
UNSPECIFIED THREADS BS 3643/2:1981 6H/6g	SIGNOFF DATE 27/09/23	DESCRIPTION NOSECONE	MASS (g) 651.99 · SCALE 1:5 · SHEET 1 OF 1 · A2
		DRAWING # LP-0040	

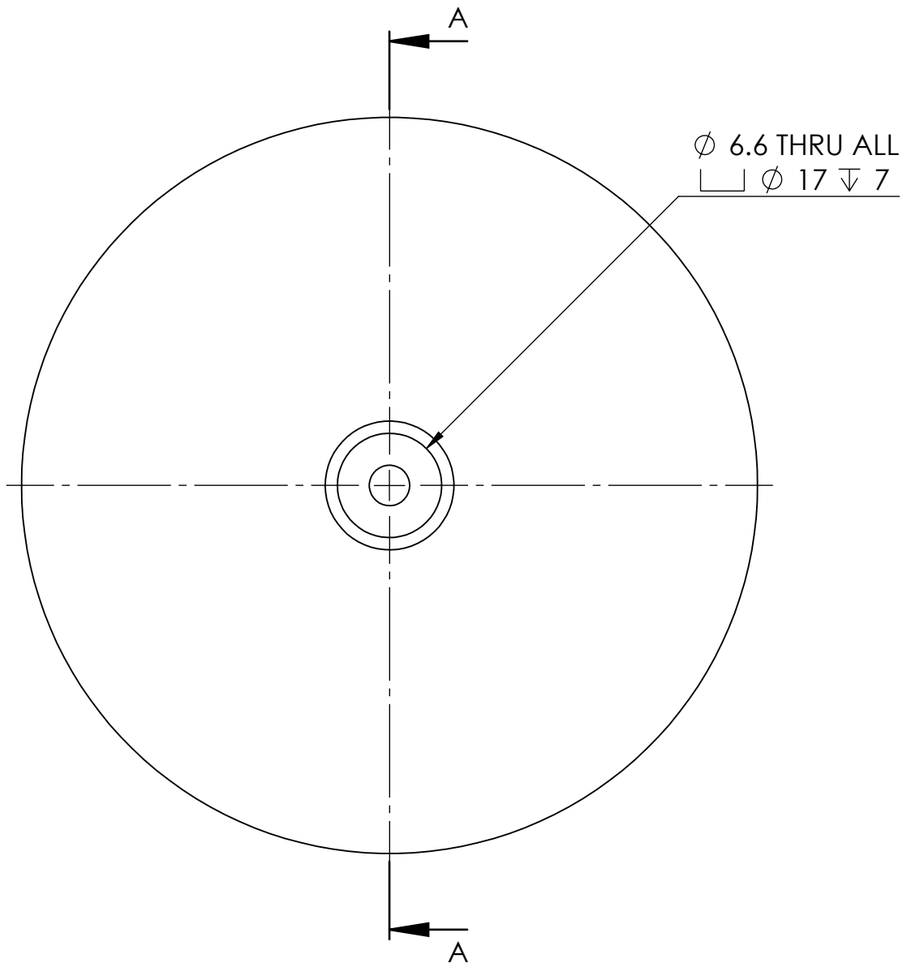

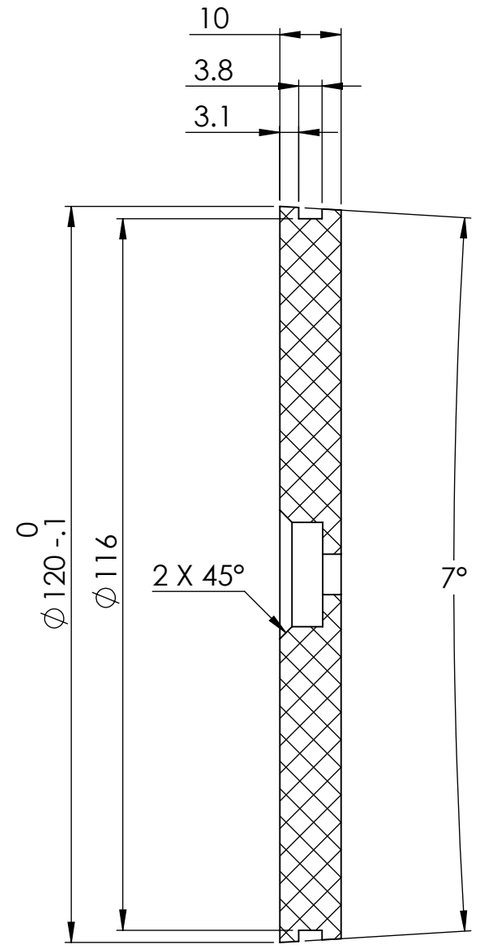

SECTION A-A

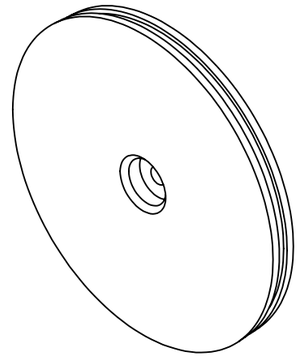

SCALE 1 : 2

DRAWING STANDARD BS 8888:2020	DRAWN BY AK	**UNCONTROLLED IF PRINTED**	LURA LEEDS UNIVERSITY ROCKETRY ASSOCIATION
TOLERANCE STANDARD ISO 2768-mk	DRAWN DATE 03/09/23	BREAK ALL SHARP EDGES	ALL DIMENSIONS IN MM UNLESS STATED OTHERWISE
UNSPECIFIED FINISHES Ra 1.6	SIGNOFF BY TT	MATERIAL HDPE	MASS (g) 102.59 / SCALE 1:1 / SHEET 1 OF 1 / A3
UNSPECIFIED THREADS BS 3643/2:1981 6H/6g	SIGNOFF DATE 14/09/23	DESCRIPTION NOSECONE BULKHEAD	
		DRAWING # LP-0043	

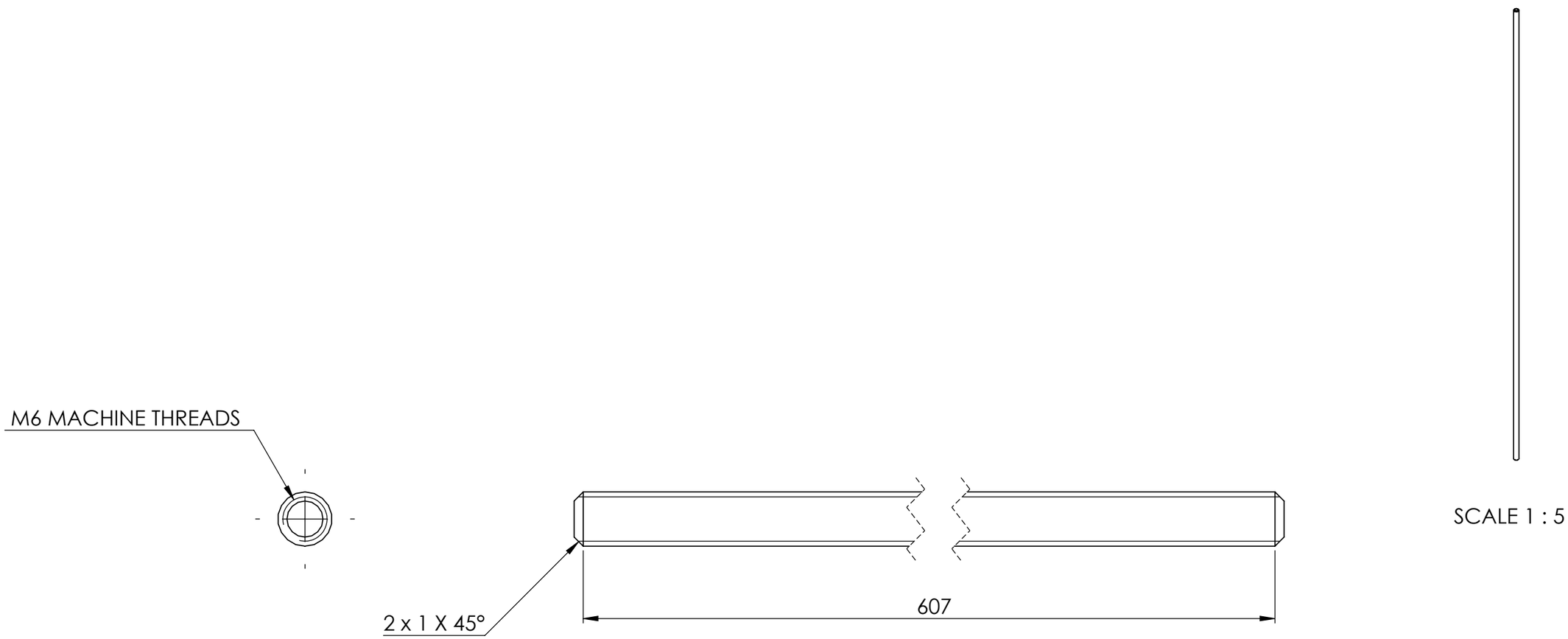

SCALE 1 : 5

DRAWING STANDARD BS 8888:2020	DRAWN BY GR	**UNCONTROLLED IF PRINTED**	LURA LEEDS UNIVERSITY ROCKETRY ASSOCIATION
TOLERANCE STANDARD ISO 2768-mk	DRAWN DATE 04/09/23	BREAK ALL SHARP EDGES	
UNSPECIFIED FINISHES Ra 1.6	SIGNOFF BY TT	MATERIAL AISI 304	ALL DIMENSIONS IN MM UNLESS STATED OTHERWISE
UNSPECIFIED THREADS BS 3643/2:1981 6H/6g	SIGNOFF DATE 14/09/23	DESCRIPTION NOSECONE ROD	MASS (g) 137.62 · SCALE 2:1 · SHEET 1 OF 1 · A3
		DRAWING # LP-0042	

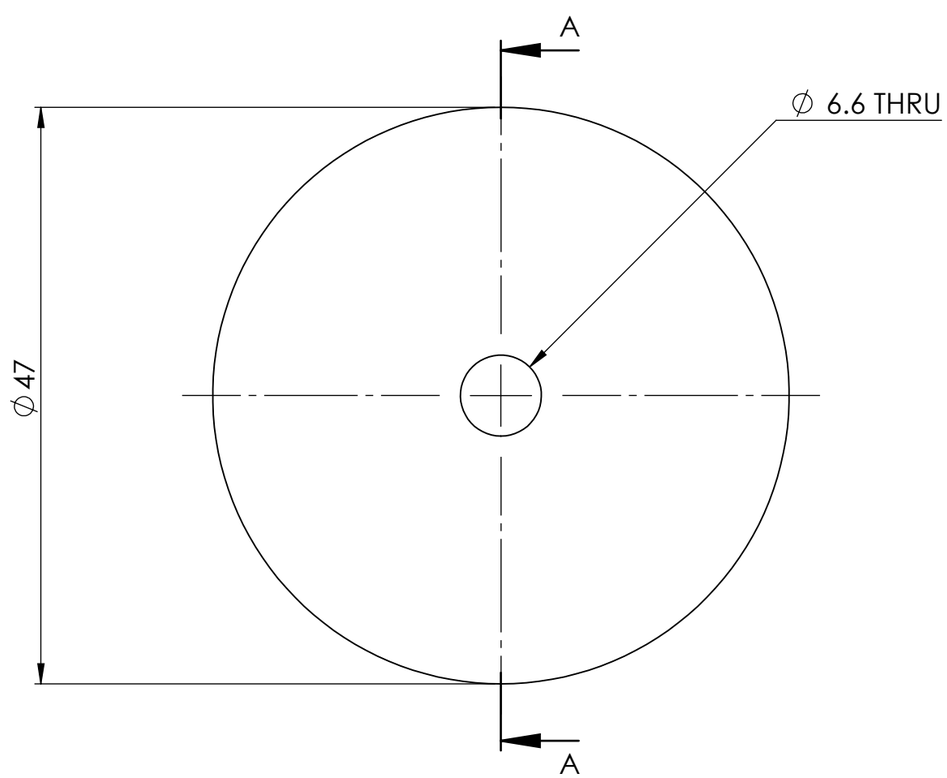

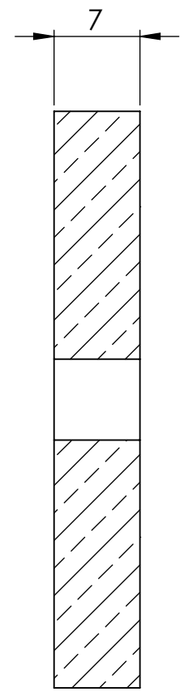

SECTION A-A

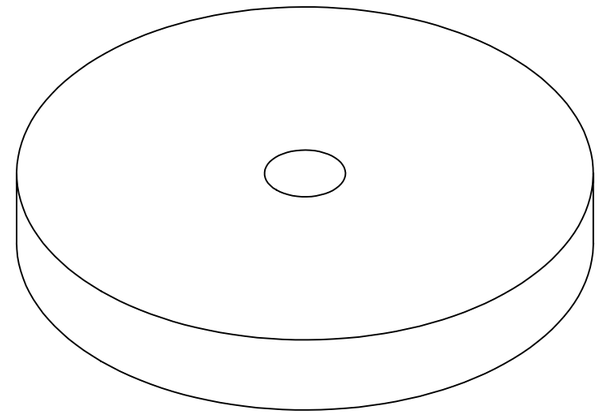

DRAWING STANDARD BS 8888:2020	DRAWN BY TT	**UNCONTROLLED IF PRINTED**	LURA LEEDS UNIVERSITY ROCKETRY ASSOCIATION
TOLERANCE STANDARD ISO 2768-mk	DRAWN DATE 14/09/23	BREAK ALL SHARP EDGES MATERIAL BRASS	ALL DIMENSIONS IN MM UNLESS STATED OTHERWISE
UNSPECIFIED FINISHES Ra 1.6	SIGNOFF BY TT	DESCRIPTION NOSECONE BALLAST	MASS (g) 101.19 / SCALE 2:1 / SHEET 1 OF 1 / A3
UNSPECIFIED THREADS BS 3643/2:1981 6H/6g	SIGNOFF DATE 14/09/23	DRAWING # LP-0047	

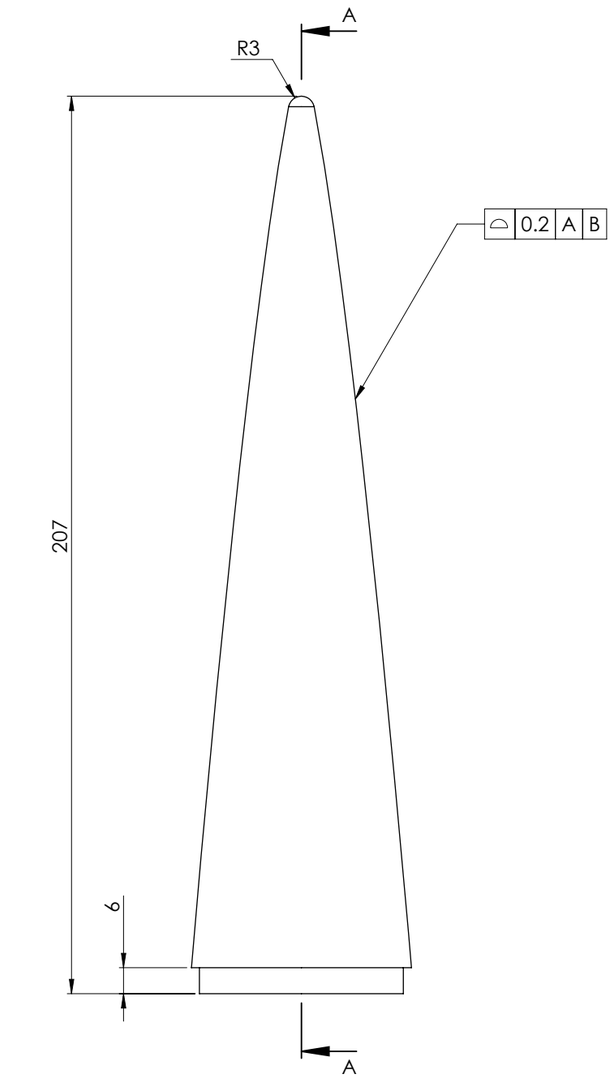

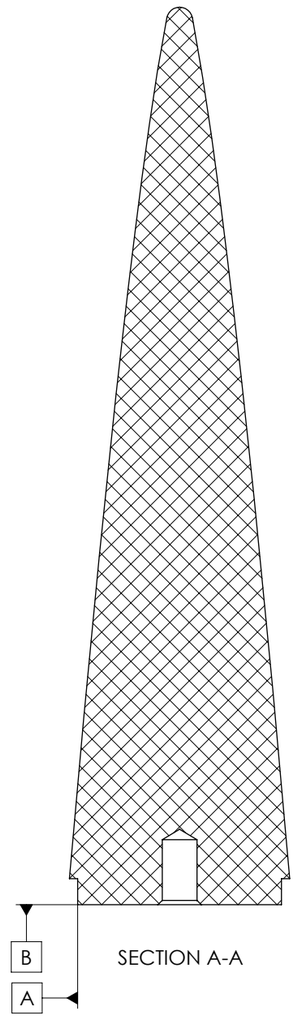

SECTION A-A

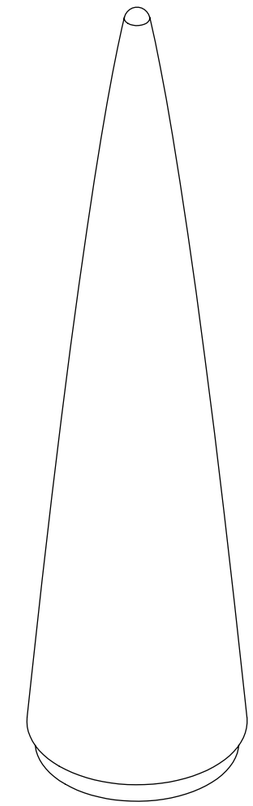

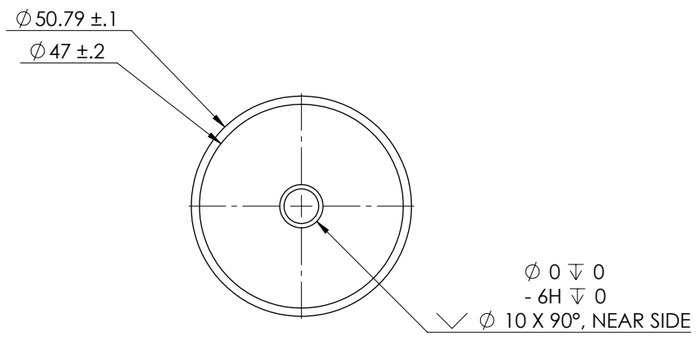

NOTES:
1. REFER TO SOLID MODEL FOR UNSPECIFIED GEOMETRY

DRAWING STANDARD BS 8888:2020	DRAWN BY TT	**UNCONTROLLED IF PRINTED**	LURA LEEDS UNIVERSITY ROCKETRY ASSOCIATION
TOLERANCE STANDARD ISO 2768-mk	DRAWN DATE 31/10/23	BREAK ALL SHARP EDGES	ALL DIMENSIONS IN MM UNLESS STATED OTHERWISE
UNSPECIFIED FINISHES Ra 1.6	SIGNOFF BY TT	MATERIAL PE HIGH DENSITY	MASS (g) 174.36 / SCALE 1:1 / SHEET 1 OF 1 / A2
UNSPECIFIED THREADS BS 3643/2:1981 6H/6g	SIGNOFF DATE 31/10/23	DESCRIPTION NOSECONE SAFETY TIP	
		DRAWING # LP-0074	

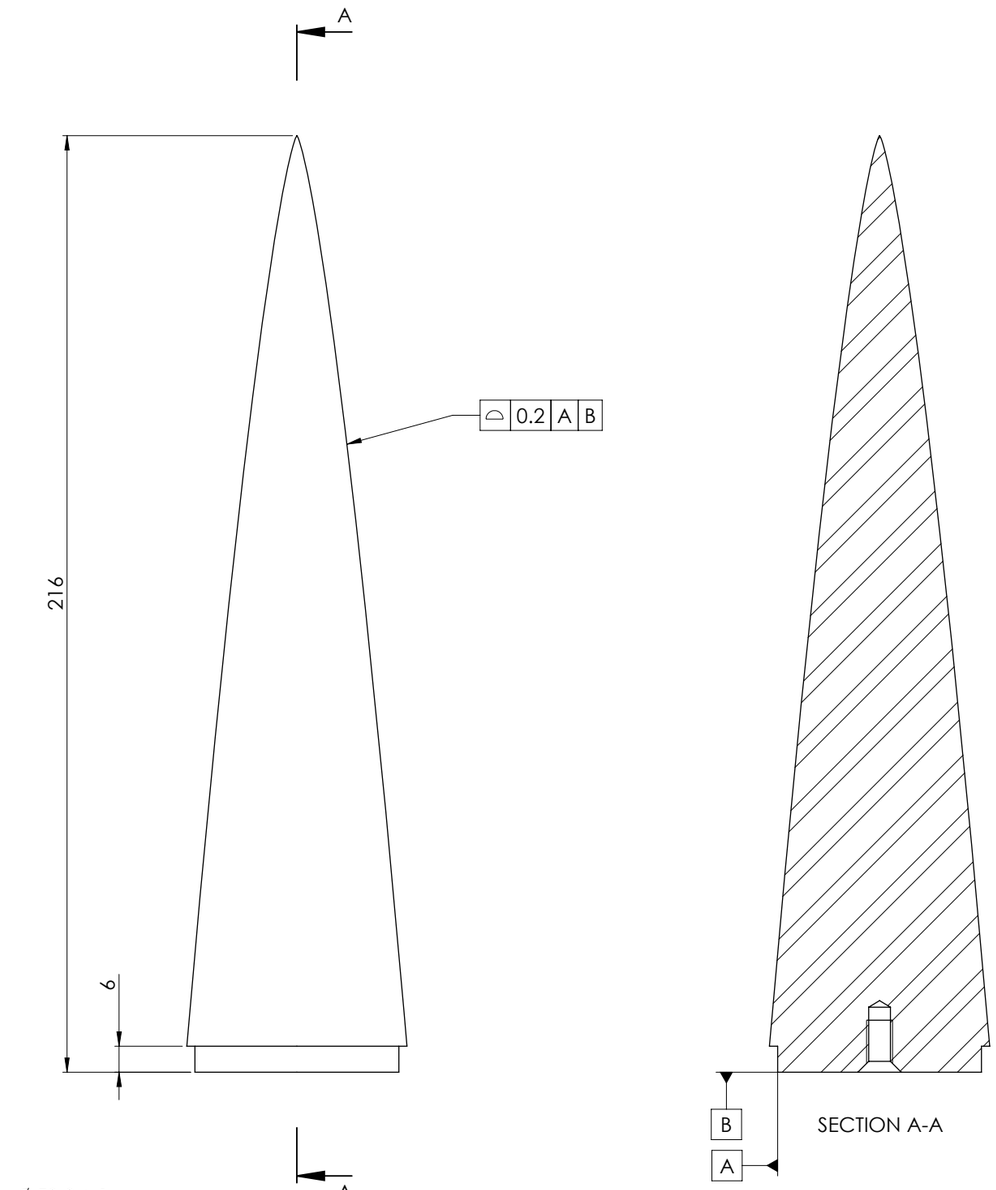

SECTION A-A

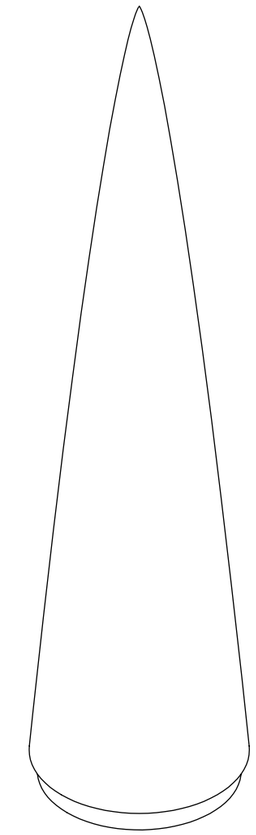

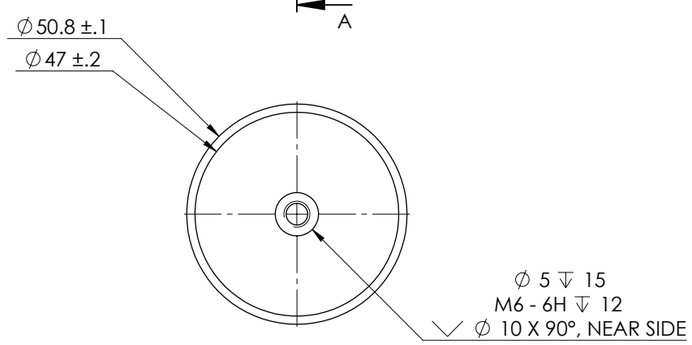

NOTES:
1. REFER TO SOLID MODEL FOR UNSPECIFIED GEOMETRY

DRAWING STANDARD BS 8888:2020	DRAWN BY TT	**UNCONTROLLED IF PRINTED**	LURA LEEDS UNIVERSITY ROCKETRY ASSOCIATION
TOLERANCE STANDARD ISO 2768-mk	DRAWN DATE 14/09/23	BREAK ALL SHARP EDGES	ALL DIMENSIONS IN MM UNLESS STATED OTHERWISE
UNSPECIFIED FINISHES Ra 1.6	SIGNOFF BY TT	MATERIAL AISI 304	MASS (g) 1470.30 / SCALE 1:1 / SHEET 1 OF 1 / A2
UNSPECIFIED THREADS BS 3643/2:1981 6H/6g	SIGNOFF DATE 14/09/23	DESCRIPTION NOSECONE TIP	
		DRAWING # LP-0041	

ITEM NO.	PART NUMBER	DESCRIPTION	QTY.
1	LP-0084	54mm MOTOR ADAPTER THRUST BULKHEAD	3
2	LP-0083	54mm MOTOR ADAPTER BULKHEAD	3
3	GORILLA-WOOD_GLUE		1

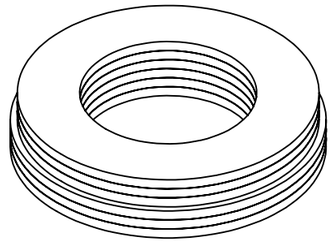

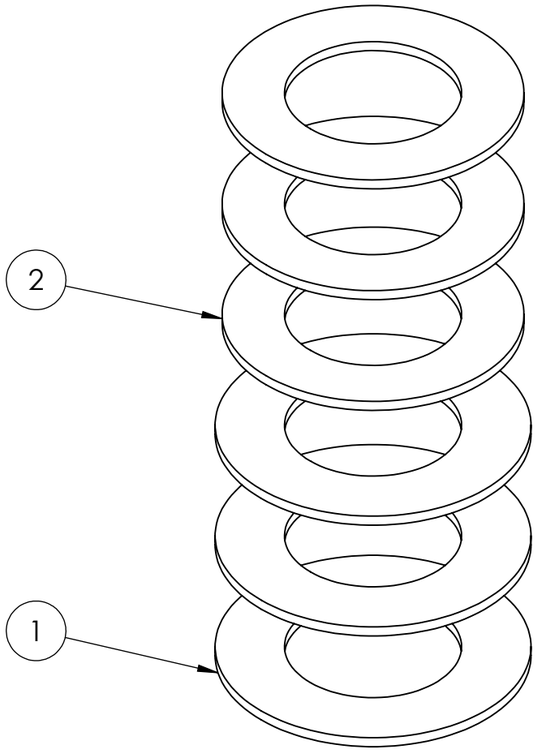

2 APPLIED TO PLANAR SURFACES

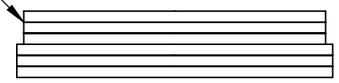

DRAWING STANDARD BS 8888:2020	DRAWN BY TT	**UNCONTROLLED IF PRINTED**	LURA LEEDS UNIVERSITY ROCKETRY ASSOCIATION
TOLERANCE STANDARD ISO 2768-mk	DRAWN DATE 07/04/24	BREAK ALL SHARP EDGES	
UNSPECIFIED FINISHES Ra 1.6	SIGNOFF BY TT	MATERIAL	ALL DIMENSIONS IN MM UNLESS STATED OTHERWISE
UNSPECIFIED THREADS BS 3643/2:1981 6H/6g	SIGNOFF DATE 07/04/24	DESCRIPTION 54mm MOTOR ADAPTER AFT BULKHEAD	MASS (g) 64.73 · SCALE 1:2 · SHEET 1 OF 1 · A3
		DRAWING # LA-0058	

ITEM NO.	PART NUMBER	DESCRIPTION	QTY.
1	LP-0083	54mm MOTOR ADAPTER BULKHEAD	3
2	GORILLA-WOOD_GLUE		1

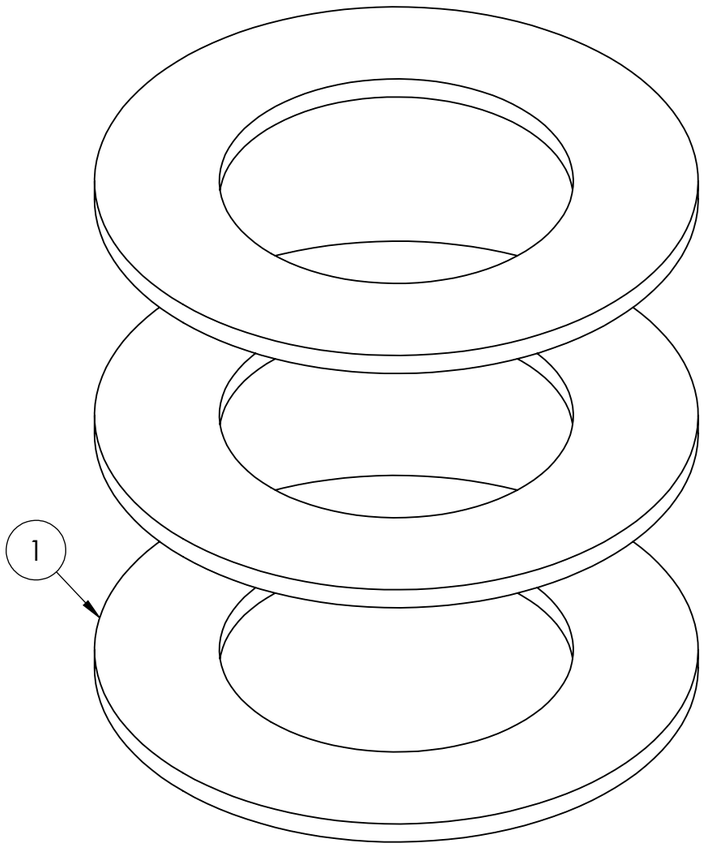

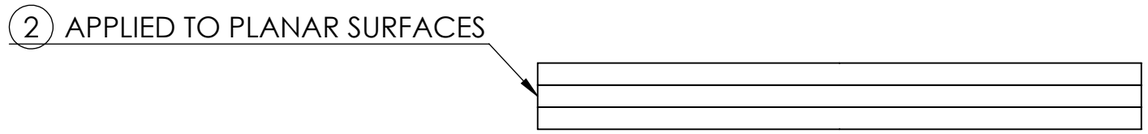

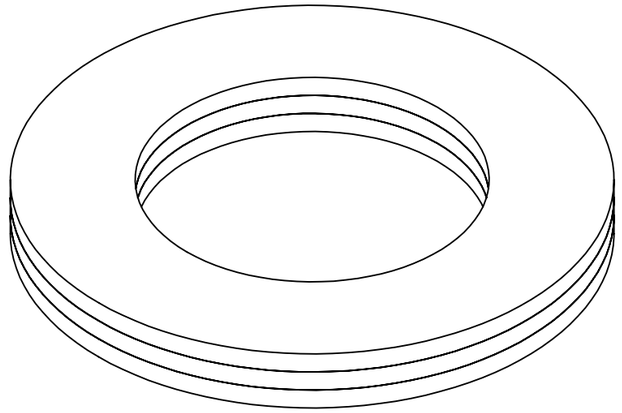

DRAWING STANDARD BS 8888:2020	DRAWN BY TT	**UNCONTROLLED IF PRINTED**	LURA LEEDS UNIVERSITY ROCKETRY ASSOCIATION
TOLERANCE STANDARD ISO 2768-mk	DRAWN DATE 07/04/24	BREAK ALL SHARP EDGES	ALL DIMENSIONS IN MM UNLESS STATED OTHERWISE
UNSPECIFIED FINISHES Ra 1.6	SIGNOFF BY TT	MATERIAL	
UNSPECIFIED THREADS BS 3643/2:1981 6H/6g	SIGNOFF DATE 07/04/24	DESCRIPTION 54mm MOTOR ADAPTER BULKHEAD	MASS (g) 30.18
		DRAWING # LA-0057	SCALE 1:1 / SHEET 1 OF 1 / A3

ITEM NO.	PART NUMBER	DESCRIPTION	QTY.
1	LP-0085	54mm MOTOR ADAPTER TUBE	1
2	LA-0058	54mm MOTOR ADAPTER AFT BULKHEAD	1
3	LA-0057	54mm MOTOR ADAPTER BULKHEAD	2
4	3M-DP490	EPOXY	1

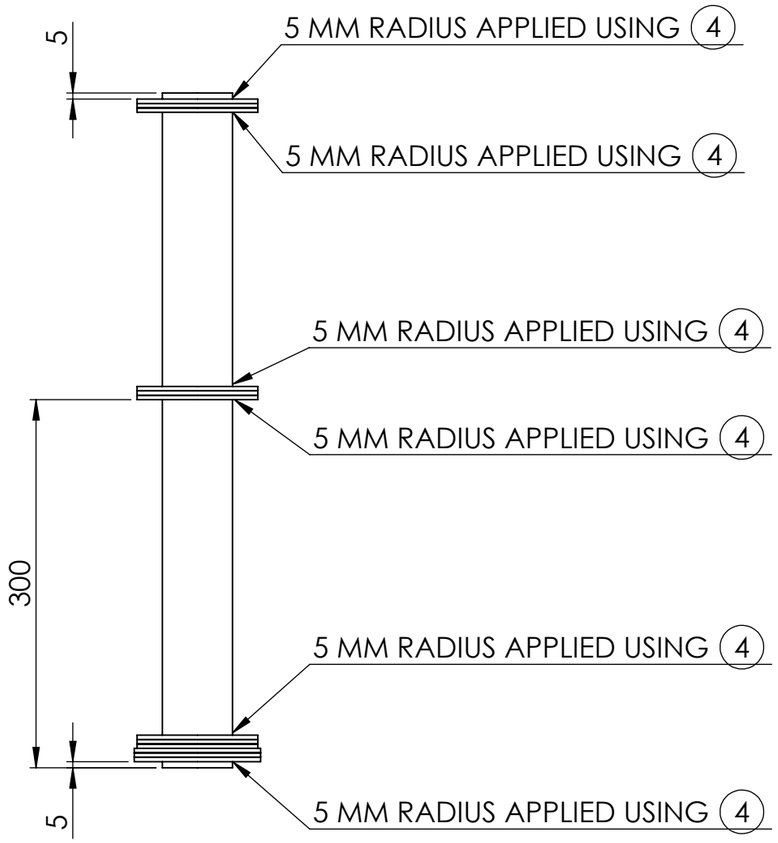

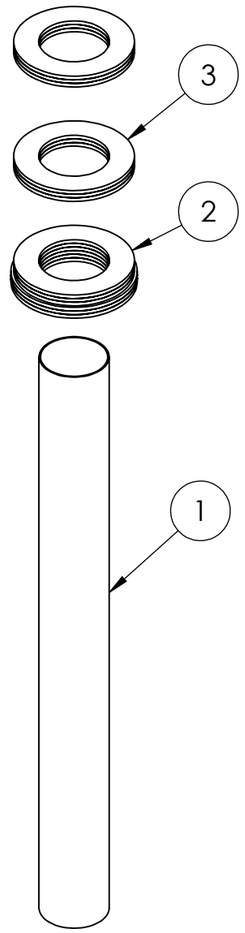

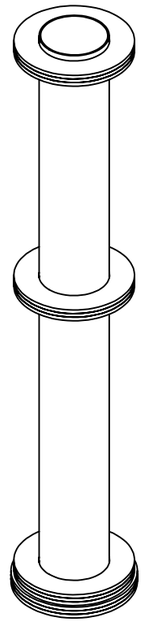

DRAWING STANDARD BS 8888:2020	DRAWN BY TT	**UNCONTROLLED IF PRINTED**	LURA LEEDS UNIVERSITY ROCKETRY ASSOCIATION
TOLERANCE STANDARD ISO 2768-mk	DRAWN DATE 07/04/24	BREAK ALL SHARP EDGES	ALL DIMENSIONS IN MM UNLESS STATED OTHERWISE
UNSPECIFIED FINISHES Ra 1.6	SIGNOFF BY TT	MATERIAL N/A	MASS (g) 274.71
UNSPECIFIED THREADS BS 3643/2:1981 6H/6g	SIGNOFF DATE 07/04/24	DESCRIPTION 54mm MOTOR ADAPTER	SCALE 1:5
		DRAWING # LA-0059	SHEET 1 OF 1
			A3

ITEM NO.	PART NUMBER	DESCRIPTION	QTY.
1	LP-0022	FINCAN COUPLER	1
2	ACCU-HDP-5-14-A1	DOWEL PINS	4

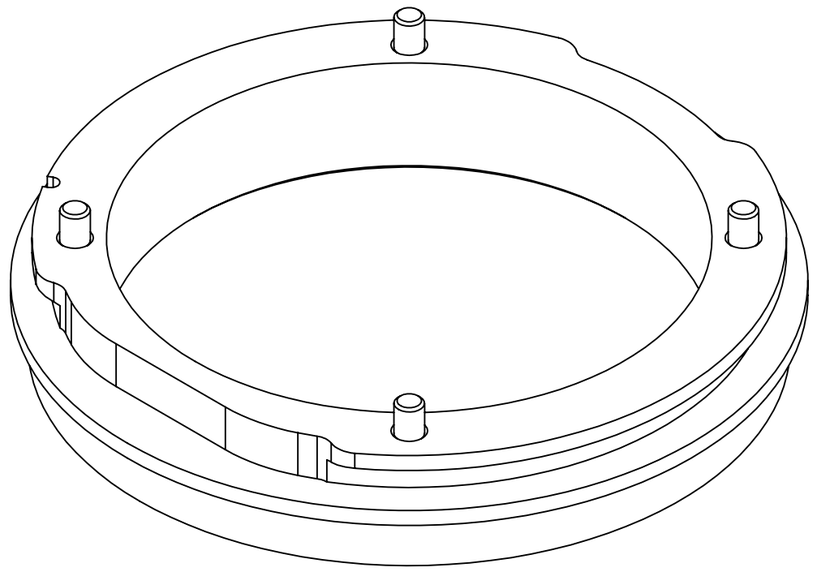

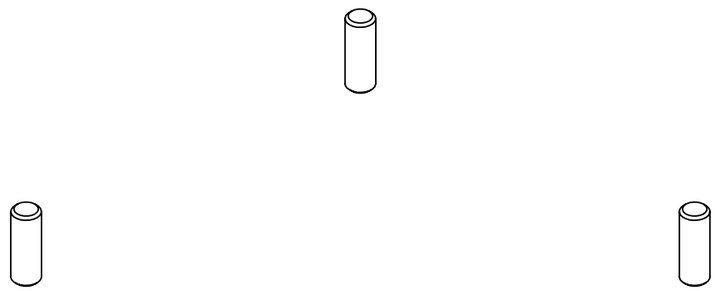

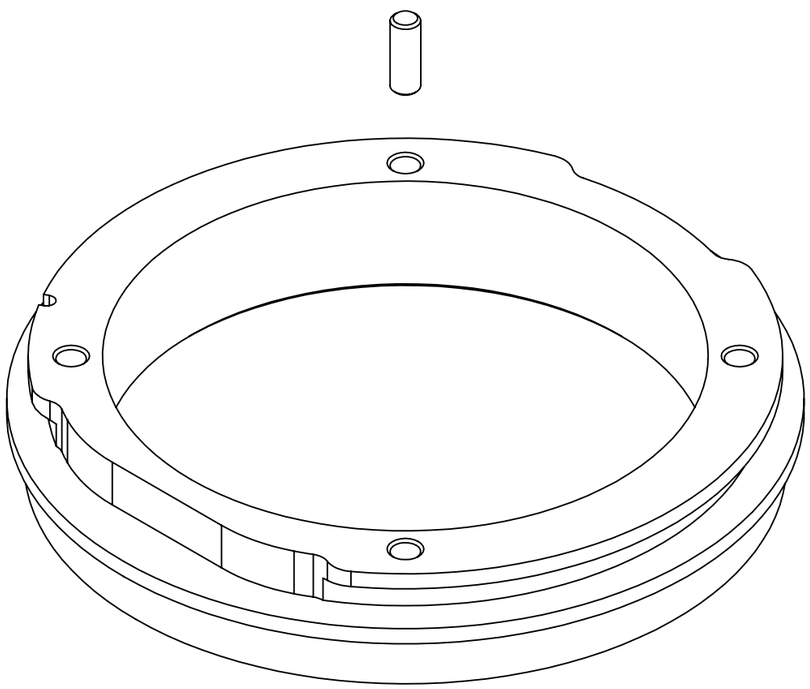

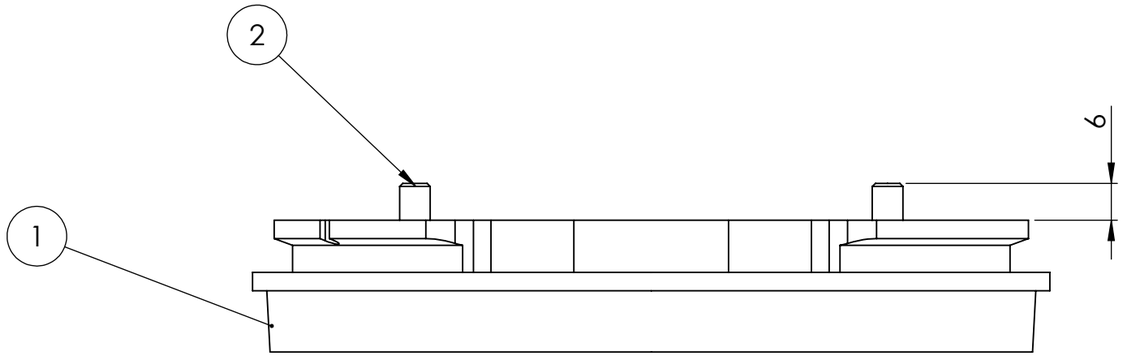

DRAWING STANDARD BS 8888:2020	DRAWN BY AD	**UNCONTROLLED IF PRINTED**	LURA LEEDS UNIVERSITY ROCKETRY ASSOCIATION
TOLERANCE STANDARD ISO 2768-mk	DRAWN DATE 05/09/23	BREAK ALL SHARP EDGES	
UNSPECIFIED FINISHES Ra 1.6	SIGNOFF BY TT	MATERIAL N/A	ALL DIMENSIONS IN MM UNLESS STATED OTHERWISE
UNSPECIFIED THREADS BS 3643/2:1981 6H/6g	SIGNOFF DATE 05/09/23	DESCRIPTION FINCAN COUPLER ASSEMBLY	MASS (g) 168.22 · SCALE 1:1 · SHEET 1 OF 1 · A3
		DRAWING # LA-0020	

ITEM NO.	PART NUMBER	DESCRIPTION	QTY.
1	LP-0021	BOATTAIL	1
2	LA-0020	FINCAN COUPLER ASSEMBLY	1

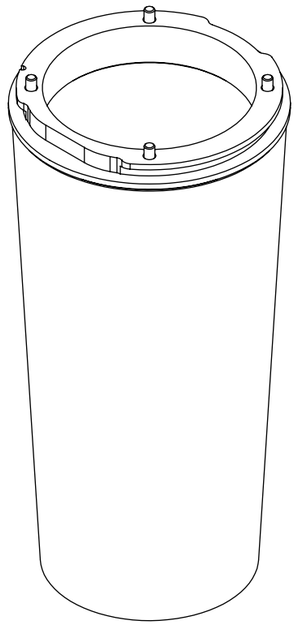

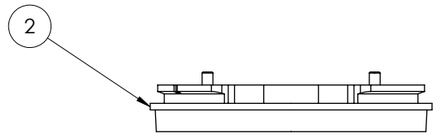

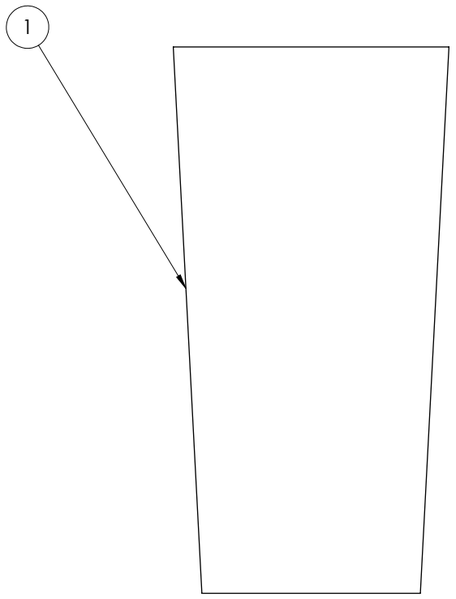

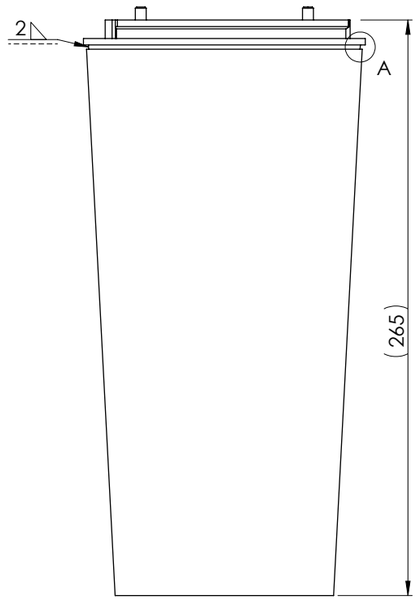

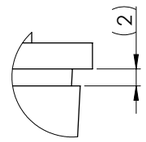

DETAIL A
SCALE 2 : 1

DRAWING STANDARD BS 8888:2020	DRAWN BY AD	**UNCONTROLLED IF PRINTED**	LURA LEEDS UNIVERSITY ROCKETRY ASSOCIATION
TOLERANCE STANDARD ISO 2768-mk	DRAWN DATE 05/09/23	BREAK ALL SHARP EDGES	ALL DIMENSIONS IN MM UNLESS STATED OTHERWISE
UNSPECIFIED FINISHES Ra 1.6	SIGNOFF BY TT	MATERIAL N/A	MASS (g) 410.01
UNSPECIFIED THREADS BS 3643/2:1981 6H/6g	SIGNOFF DATE 05/09/23	DESCRIPTION BOATTAIL-COUPLER ASSEMBLY	SCALE 1:2
		DRAWING # LA-0019	SHEET 1 OF 1
			A2

ITEM NO.	PART #	DESCRIPTION	QTY.
1	LA-0019	BOATTAIL-COUPLER ASSEMBLY	1
2	LP-0019	FIN	4
3	LP-0020	TIP-TO-TIP FIN LAYUP	4
4	3M-DP490	EPOXY	1

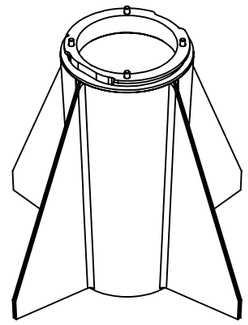

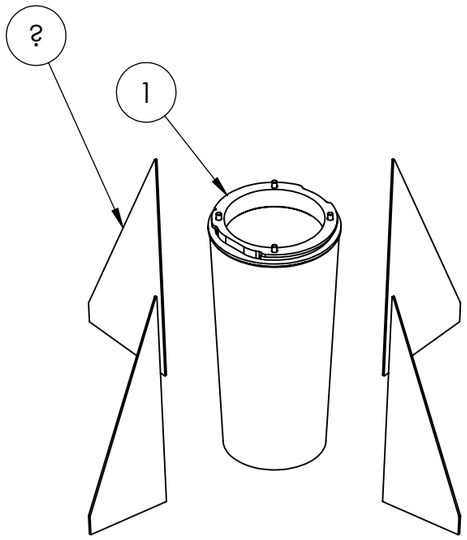

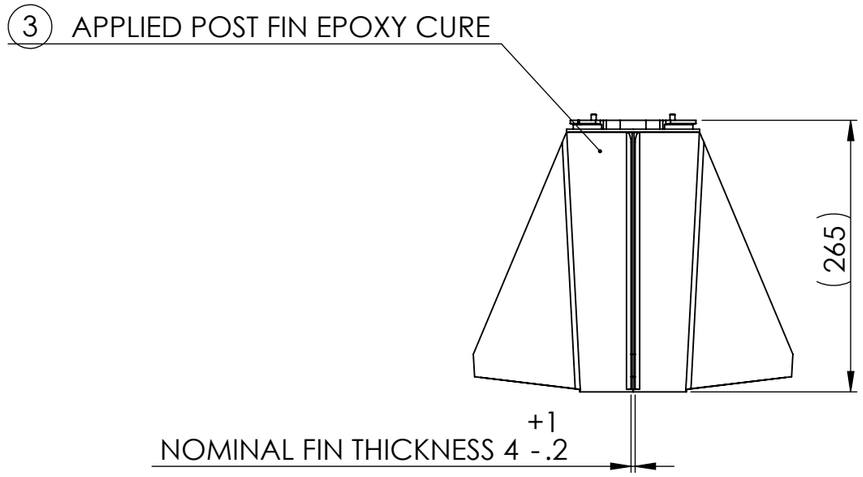

NOTES:

- 3 IS A TIP-TO-TIP WET CARBON FIBER LAYUP

DRAWING STANDARD BS 8888:2020	DRAWN BY AD	**UNCONTROLLED IF PRINTED**	LURA LEEDS UNIVERSITY ROCKETRY ASSOCIATION
TOLERANCE STANDARD ISO 2768-mk	DRAWN DATE 12/04/24	BREAK ALL SHARP EDGES	ALL DIMENSIONS IN MM UNLESS STATED OTHERWISE
UNSPECIFIED FINISHES Ra 1.6	SIGNOFF BY TT	MATERIAL N/A	MASS (g) 1050.00 / SCALE 1:6 / SHEET 1 OF 1 / A3
UNSPECIFIED THREADS BS 3643/2:1981 6H/6g	SIGNOFF DATE 12/04/24	DESCRIPTION FINCAN	
		DRAWING # LA-0017	

ITEM NO.	PART #	DESCRIPTION	QTY.
1	LP-0026	FORWARD AFT TUBE COUPLER	1
2	ACCU-HDP-5-14-A1		4

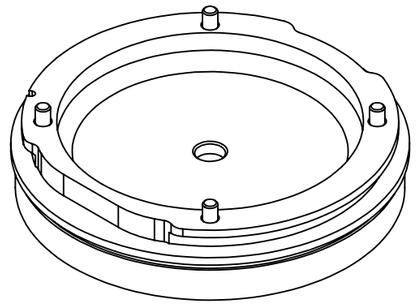

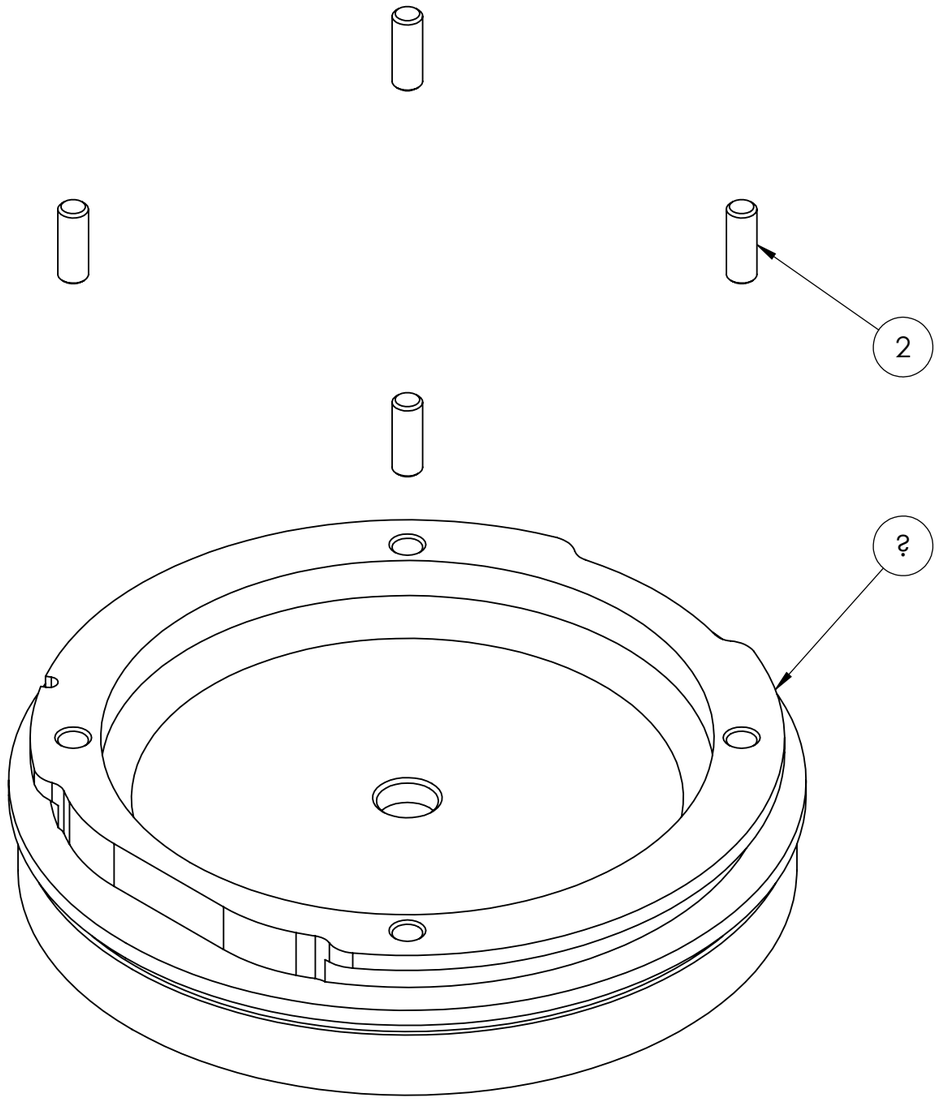

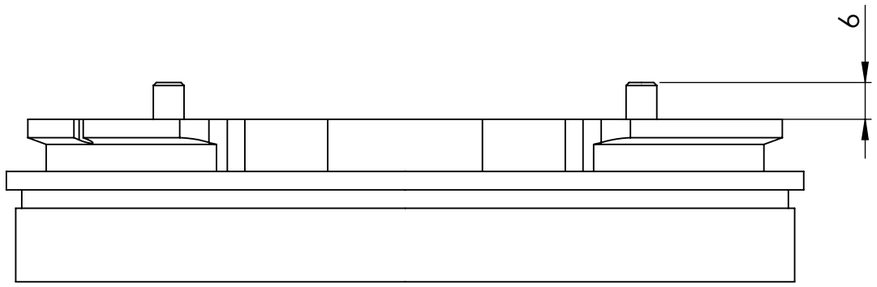

DRAWING STANDARD BS 8888:2020	DRAWN BY TT	**UNCONTROLLED IF PRINTED**	LURA LEEDS UNIVERSITY ROCKETRY ASSOCIATION
TOLERANCE STANDARD ISO 2768-mk	DRAWN DATE 04/09/23	BREAK ALL SHARP EDGES	
UNSPECIFIED FINISHES Ra 1.6	SIGNOFF BY TT	MATERIAL N/A	ALL DIMENSIONS IN MM UNLESS STATED OTHERWISE
UNSPECIFIED THREADS BS 3643/2:1981 6H/6g	SIGNOFF DATE 04/09/23	DESCRIPTION AFT TUBE FORWARD CAP ASSEMBLY	MASS (g) 321.61 · SCALE 1:1 · SHEET 1 OF 1 · A3
		DRAWING # LA-0021	

ITEM NO.	PART #	DESCRIPTION	QTY.
1	LP-0023	AFT TUBE SKIN	1
2	LP-0024	MOTOR TUBE	1
3	LA-0021	AFT TUBE FORWARD CAP ASSEMBLY	1
4	LP-0025	AFT AFT TUBE COUPLER	1
5	3M-DP490	EPOXY	1

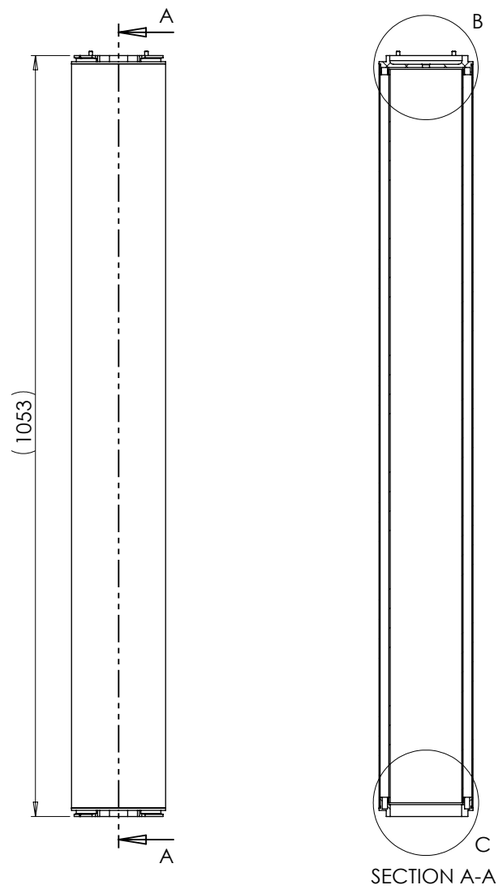

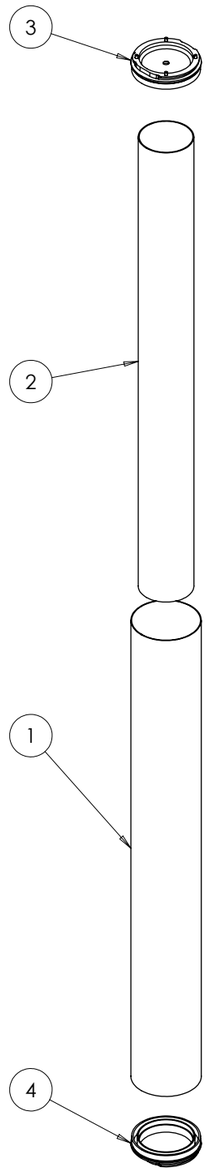

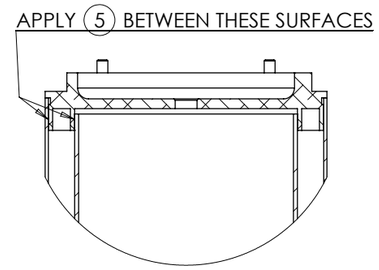

DETAIL B
SCALE 1 : 2

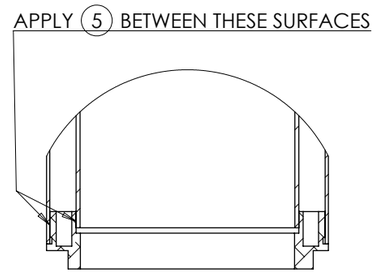

DETAIL C
SCALE 1 : 2

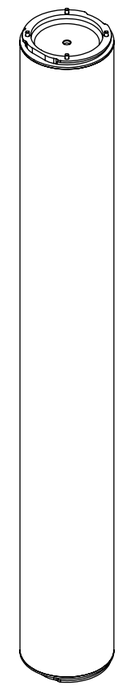

SCALE 1 : 8

DRAWING STANDARD BS 8888:2020	DRAWN BY KL	UNCONTROLLED IF PRINTED	LURA LEEDS UNIVERSITY ROCKETRY ASSOCIATION
TOLERANCE STANDARD ISO 2768-mk	DRAWN DATE 06/09/23	BREAK ALL SHARP EDGES	ALL DIMENSIONS IN MM UNLESS STATED OTHERWISE
UNSPECIFIED FINISHES Ra 1.6	SIGNOFF BY TT	MATERIAL N/A	MASS (g) 2428.35
UNSPECIFIED THREADS BS 3643/2:1981 6H/6g	SIGNOFF DATE 05/09/23	DESCRIPTION AFT TUBE	SCALE 1:6
		DRAWING # LA-0018	SHEET 1 OF 1
			A2

ITEM NO.	PART #	DESCRIPTION	QTY.
1	CTI-GEN2_6GXL_MOTOR_CASING		1
2	CTI-N5800		1

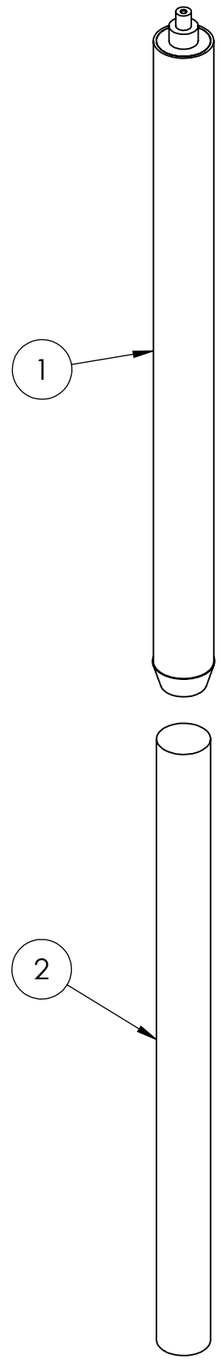

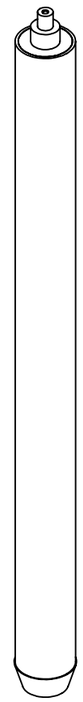

DRAWING STANDARD BS 8888:2020	DRAWN BY TT	**UNCONTROLLED IF PRINTED**	LURA LEEDS UNIVERSITY ROCKETRY ASSOCIATION
TOLERANCE STANDARD ISO 2768-mk	DRAWN DATE 14/09/23	BREAK ALL SHARP EDGES	
UNSPECIFIED FINISHES Ra 1.6	SIGNOFF BY TT	MATERIAL N/A	ALL DIMENSIONS IN MM UNLESS STATED OTHERWISE
UNSPECIFIED THREADS BS 3643/2:1981 6H/6g	SIGNOFF DATE 14/09/23	DESCRIPTION HIGH ALTITUDE MOTOR ASSEMBLY	MASS (g) 14826.00 / SCALE 1:10 / SHEET 1 OF 1 / A3
		DRAWING # LA-0035	

ITEM NO.	PART #	DESCRIPTION	QTY.
1	AEROTECH-54-2560-CASING		1
2	AEROTECH-K700		1
3	LA-0059	54mm MOTOR ADAPTER	1

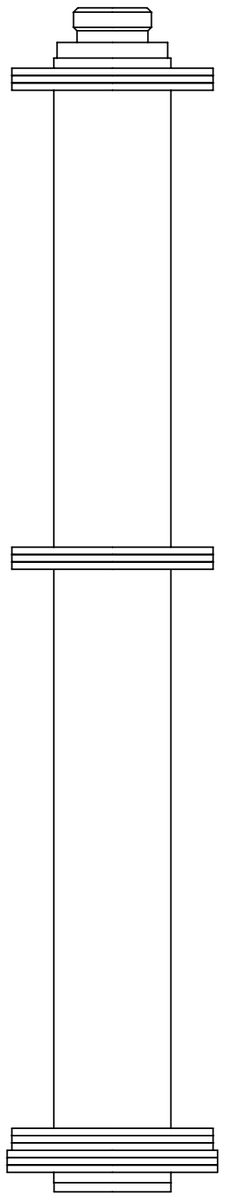

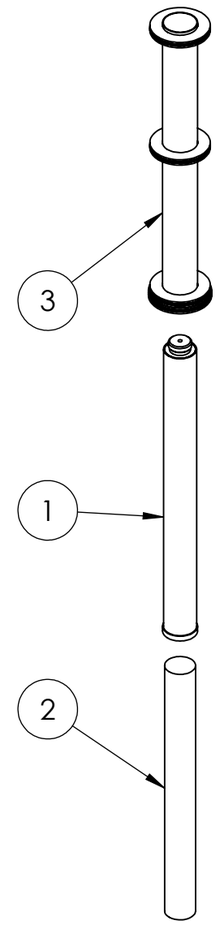

SCALE 1 : 10

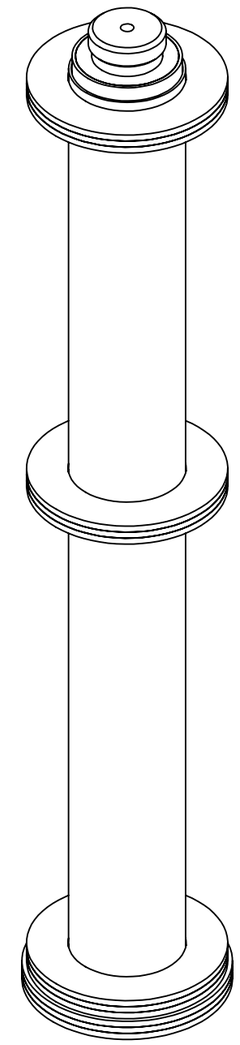

DRAWING STANDARD BS 8888:2020	DRAWN BY TT	**UNCONTROLLED IF PRINTED**	LURA LEEDS UNIVERSITY ROCKETRY ASSOCIATION
TOLERANCE STANDARD ISO 2768-mk	DRAWN DATE 07/04/24	BREAK ALL SHARP EDGES	
UNSPECIFIED FINISHES Ra 1.6	SIGNOFF BY TT	MATERIAL N/A	ALL DIMENSIONS IN MM UNLESS STATED OTHERWISE
UNSPECIFIED THREADS BS 3643/2:1981 6H/6g	SIGNOFF DATE 07/04/24	DESCRIPTION LOW ALTITUDE MOTOR ASSEMBLY	MASS (g) 2309.71 · SCALE 1:3 · SHEET 1 OF 1 · A3
		DRAWING # LA-0037	

ITEM NO.	PART #	DESCRIPTION	QTY.
1	LP-0015	MANACLE RING PIVOT	1
2	LP-0000	MANACLE RING ARM	2
3	HDP-3-16-V1-A1		5
4	LP-0013	MANACLE RING LATCH A	1
5	LP-0014	MANACLE RING LATCH B	1
6	SSCF-M4-14-A2		1
7	NORD-LOCK-NL4SS		1
8	HRW-M4-8-1-PA		1

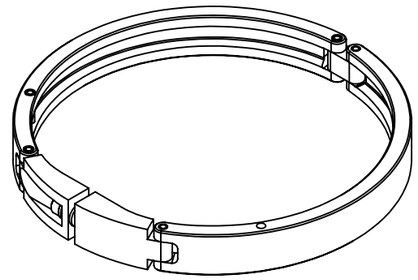

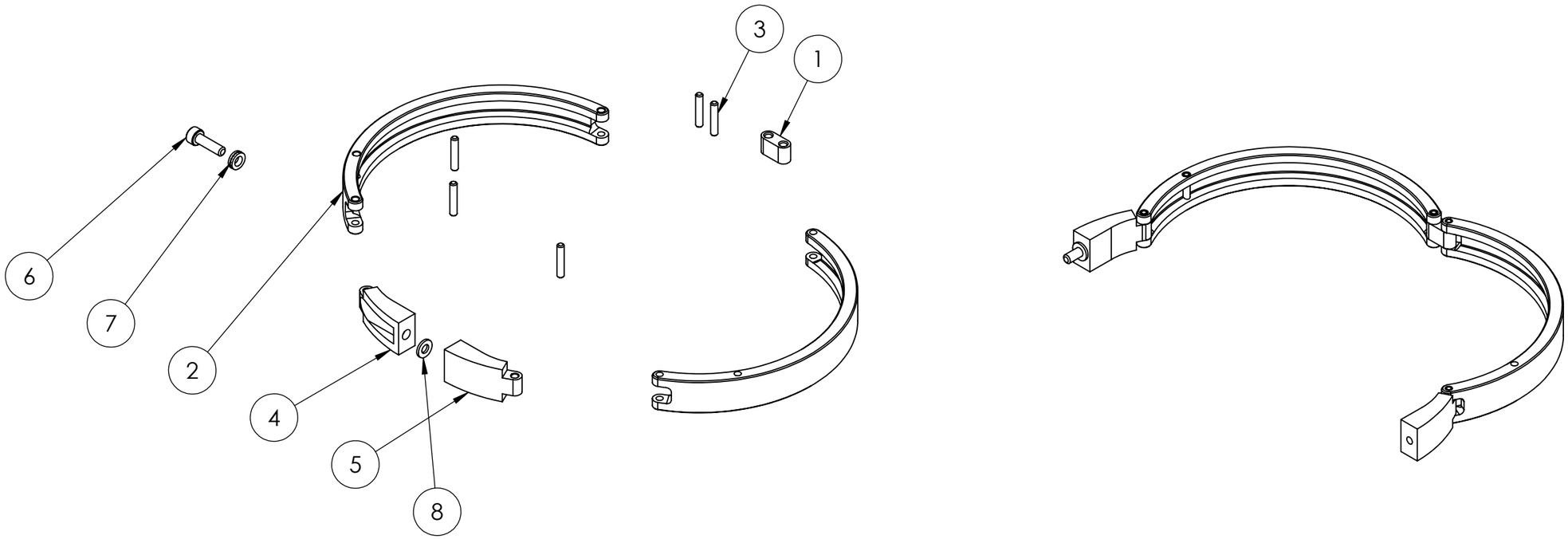

DRAWING STANDARD BS 8888:2020	DRAWN BY TT	UNCONTROLLED IF PRINTED	LURA LEEDS UNIVERSITY ROCKETRY ASSOCIATION
TOLERANCE STANDARD ISO 2768-mk	DRAWN DATE 31/10/23	BREAK ALL SHARP EDGES	ALL DIMENSIONS IN MM UNLESS STATED OTHERWISE
UNSPECIFIED FINISHES Ra 1.6	SIGNOFF BY TT	MATERIAL N/A	MASS (g) 88.31 / SCALE 1:2 / SHEET 1 OF 1 / A3
UNSPECIFIED THREADS BS 3643/2:1981 6H/6g	SIGNOFF DATE 31/10/23	DESCRIPTION MANACLE RING	
		DRAWING # LA-0009	

ITEM NO.	PART #	DESCRIPTION	QTY.	QTY.
1	LA-0035	HIGH ALTITUDE MOTOR ASSEMBLY	1	-
2	LA-0037	LOW ALTITUDE MOTOR ASSEMBLY	-	1
3	LA-0017	FINCAN	1	1
4	LA-0018	AFT TUBE	1	1
5	LA-0009	MANACLE RING	1	1
6	LP-0018	MOTOR CASE RETAINING ROD - 6GXL	1	-
7	ACCU-HPN-38-16-A2		1	-
8	LP-0071	MOTOR CASE RETAINING ROD - 54/2560	-	1
9	LOCTITE-242	MEDIUM STRENGTH THREAD LOCKING COMPOUND	1	1
10	91845A030	18-8 STAINLESS STEEL HEX NUT	-	1

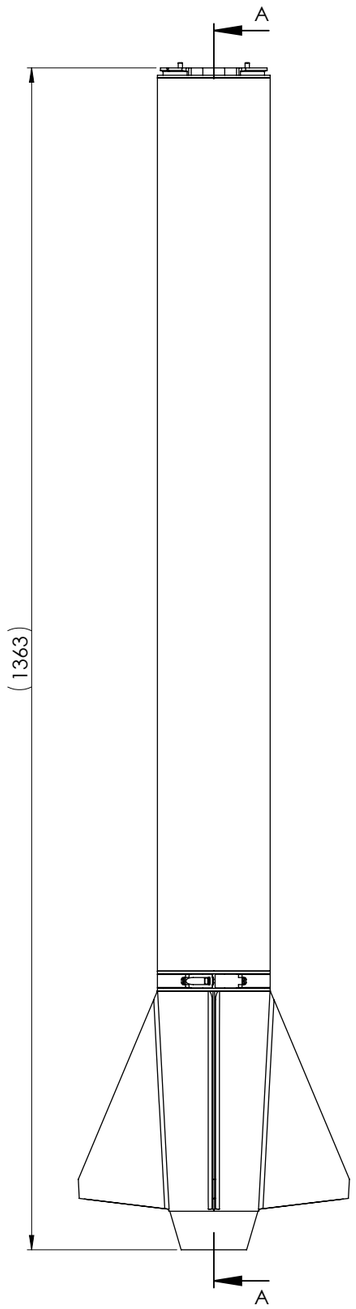

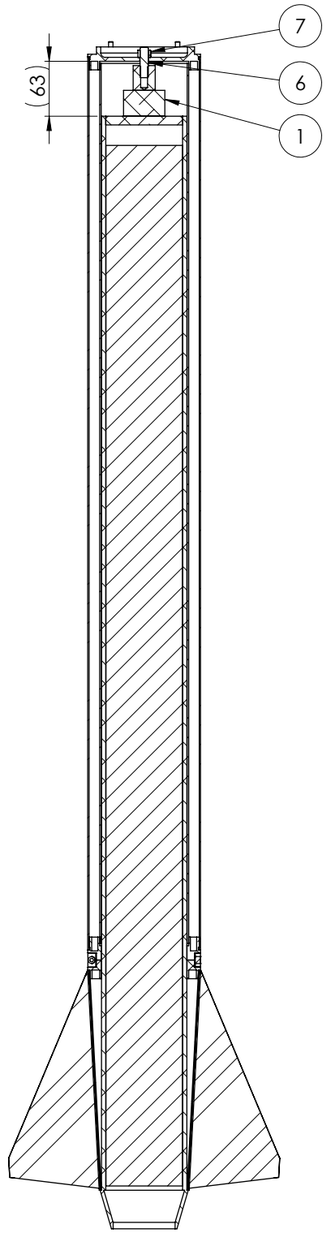

SECTION A-A

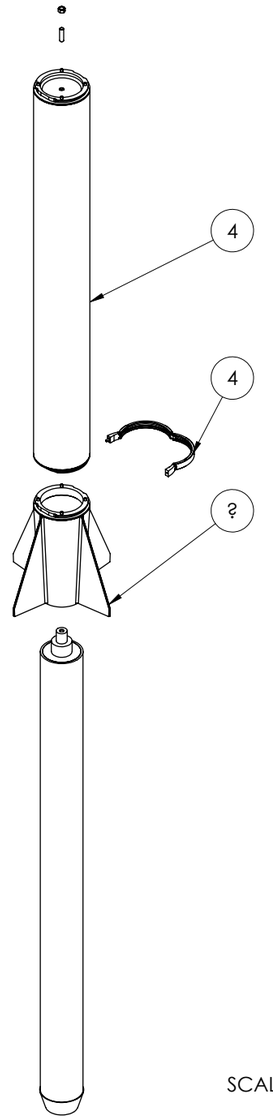

SCALE 1 : 10

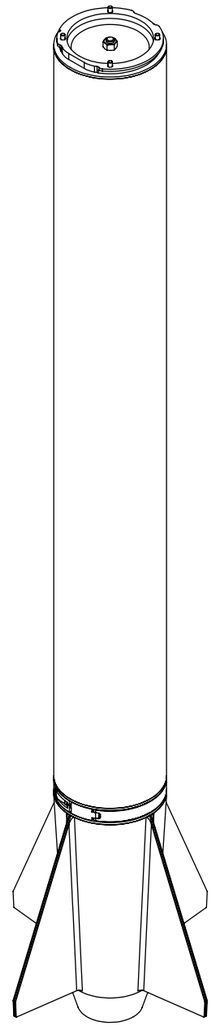

SCALE 1 : 5

NOTES:
- HIGH ALTITUDE CONFIGURATION SHOWN

DRAWING STANDARD BS 8888:2020	DRAWN BY TT	**UNCONTROLLED IF PRINTED**	LURA LEEDS UNIVERSITY ROCKETRY ASSOCIATION
TOLERANCE STANDARD ISO 2768-mk	DRAWN DATE 04/09/23	BREAK ALL SHARP EDGES	ALL DIMENSIONS IN MM UNLESS STATED OTHERWISE
UNSPECIFIED FINISHES Ra 1.6	SIGNOFF BY TT	MATERIAL N/A	MASS (g) 18419.38 / SCALE 1:5 / SHEET 1 OF 2 / A2
UNSPECIFIED THREADS BS 3643/2:1981 6H/6g	SIGNOFF DATE 04/09/23	DESCRIPTION AFT ASSEMBLY	
		DRAWING # LA-0015	

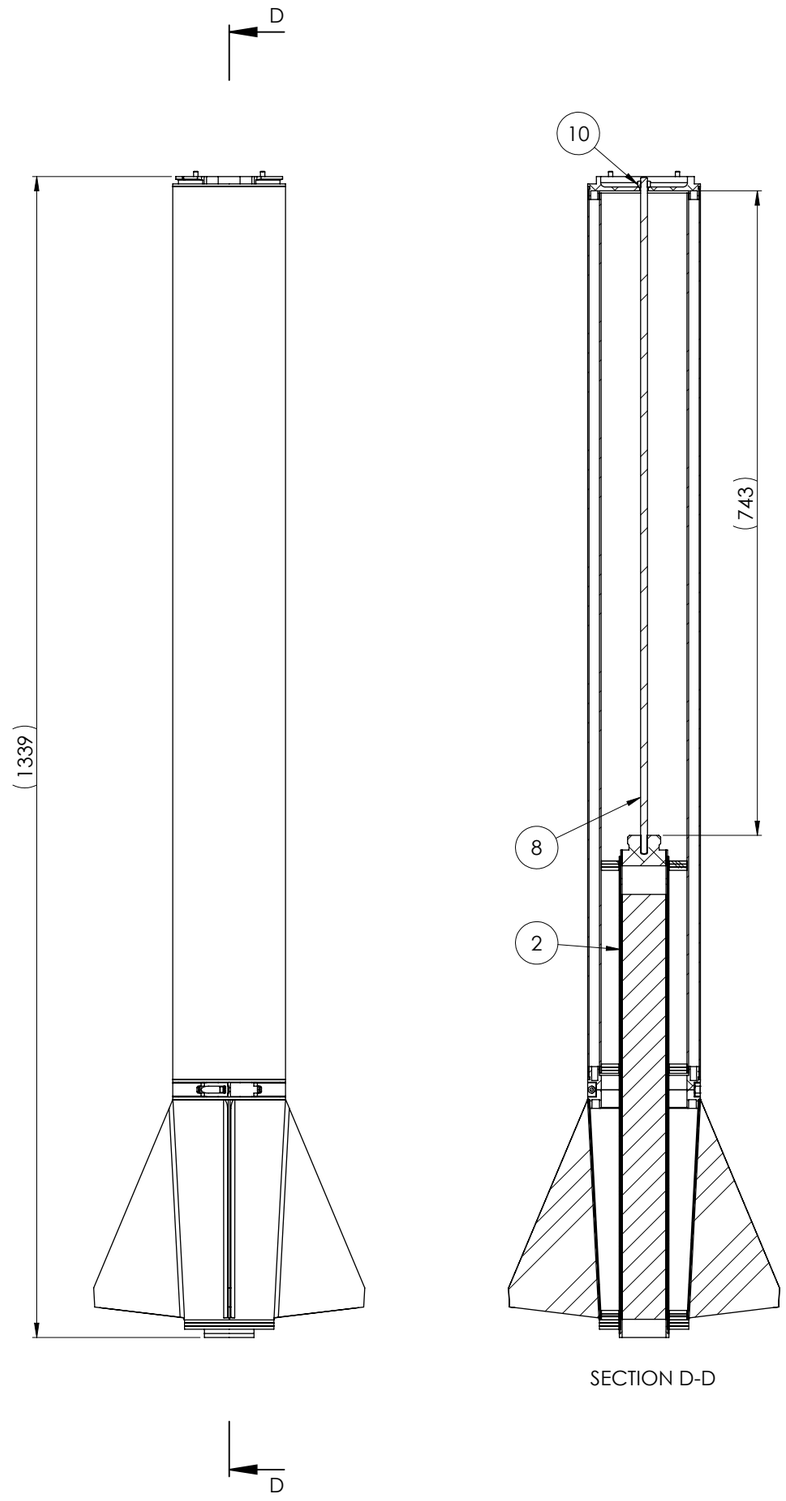

SECTION D-D

NOTES:

- LOW ALTITUDE CONFIGURATION SHOWN

DRAWING STANDARD BS 8888:2020	DRAWN BY TT	**UNCONTROLLED IF PRINTED**	LURA LEEDS UNIVERSITY ROCKETRY ASSOCIATION
TOLERANCE STANDARD ISO 2768-mk	DRAWN DATE 07/04/24	BREAK ALL SHARP EDGES	ALL DIMENSIONS IN MM UNLESS STATED OTHERWISE
UNSPECIFIED FINISHES Ra 1.6	SIGNOFF BY TT	MATERIAL N/A	MASS (g) 18419.38 / SCALE 1:5 / SHEET 2 OF 2 / A2
UNSPECIFIED THREADS BS 3643/2:1981 6H/6g	SIGNOFF DATE 07/04/24	DESCRIPTION AFT ASSEMBLY	
		DRAWING # LA-0015	

ITEM NO.	PART #	DESCRIPTION	QTY.
1	LP-0032	AVIONICS BAY AFT CAP	1
2	BARNWELL-1000-25		2

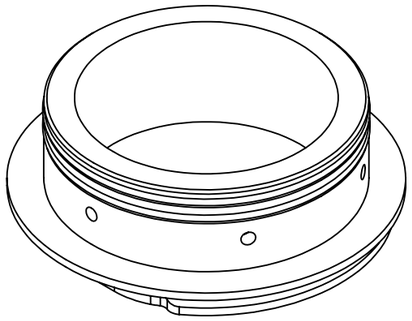

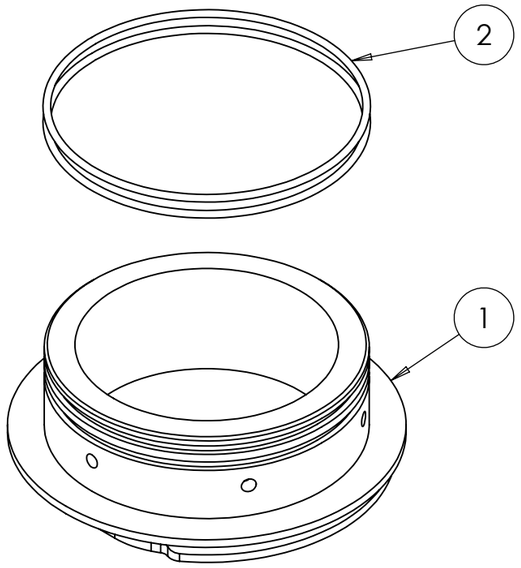

DRAWING STANDARD BS 8888:2020	DRAWN BY TT	**UNCONTROLLED IF PRINTED**	LURA LEEDS UNIVERSITY ROCKETRY ASSOCIATION
TOLERANCE STANDARD ISO 2768-mk	DRAWN DATE 05/09/23	BREAK ALL SHARP EDGES	
UNSPECIFIED FINISHES Ra 1.6	SIGNOFF BY TT	MATERIAL N/A	ALL DIMENSIONS IN MM UNLESS STATED OTHERWISE
UNSPECIFIED THREADS BS 3643/2:1981 6H/6g	SIGNOFF DATE 05/09/23	DESCRIPTION AFT AVIONICS BAY CAP ASSEMBLY	MASS (g) 480.39 · SCALE 1:2 · SHEET 1 OF 1 · A3
		DRAWING # LA-0025	

ITEM NO.	PART #	DESCRIPTION	QTY.
1	LP-0016	UNIVERSAL COUPLER CONNECTOR BODY	1
2	MILL-MAX-0868-0-15-20-82-14-11-0		8

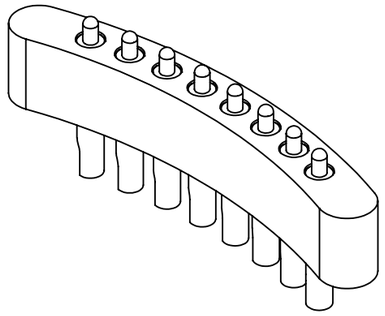

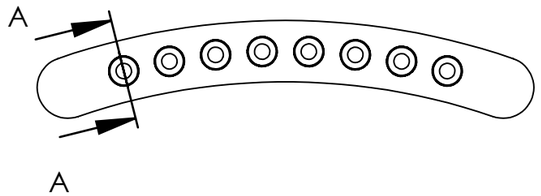

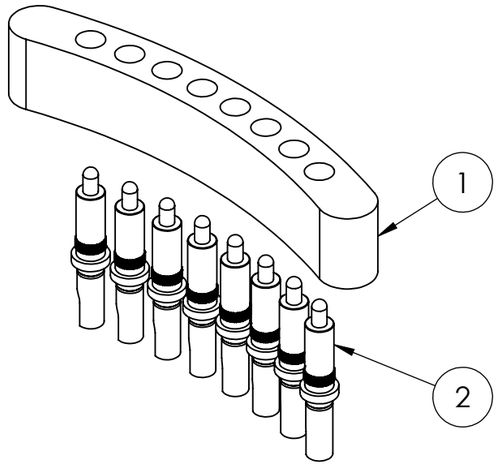

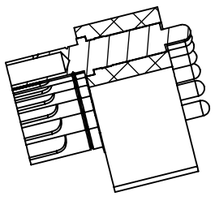

SECTION A-A

DRAWING STANDARD BS 8888:2020	DRAWN BY TT	UNCONTROLLED IF PRINTED	LURA LEEDS UNIVERSITY ROCKETRY ASSOCIATION
TOLERANCE STANDARD ISO 2768-mk	DRAWN DATE 04/09/23	BREAK ALL SHARP EDGES	ALL DIMENSIONS IN MM UNLESS STATED OTHERWISE
UNSPECIFIED FINISHES Ra 1.6	SIGNOFF BY TT	MATERIAL N/A	MASS (g) 4.44 / SCALE 2:1 / SHEET 1 OF 1 / A3
UNSPECIFIED THREADS BS 3643/2:1981 6H/6g	SIGNOFF DATE 04/09/23	DESCRIPTION MALE UNIVERSAL COUPLER CONNECTOR	
		DRAWING # LA-0012	

ITEM NO.	PART #	DESCRIPTION	QTY.
1	LP-0029	AVIONICS BAY FORWARD CAP	1
2	SWITCHCRAFT-35FM3S		4
3	ACCU-HDP-5-14-A1		4
4	SAVIOUR_POWER-SWB03		3
5	LP-0030	BATTERY PADDING	2
6	BARNWELL-1000-25		2
7	LA-0010	FEMALE UNIVERSAL COUPLER CONNECTOR	2
8	3M-DP490	EPOXY	1
9	KIWIBIRD-AEJ5-P		4

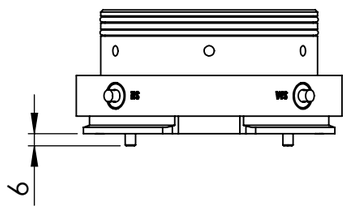

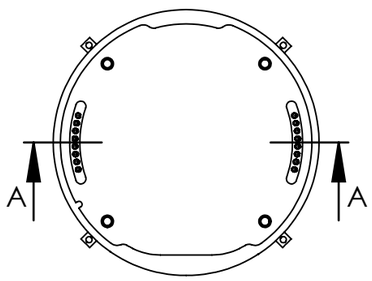

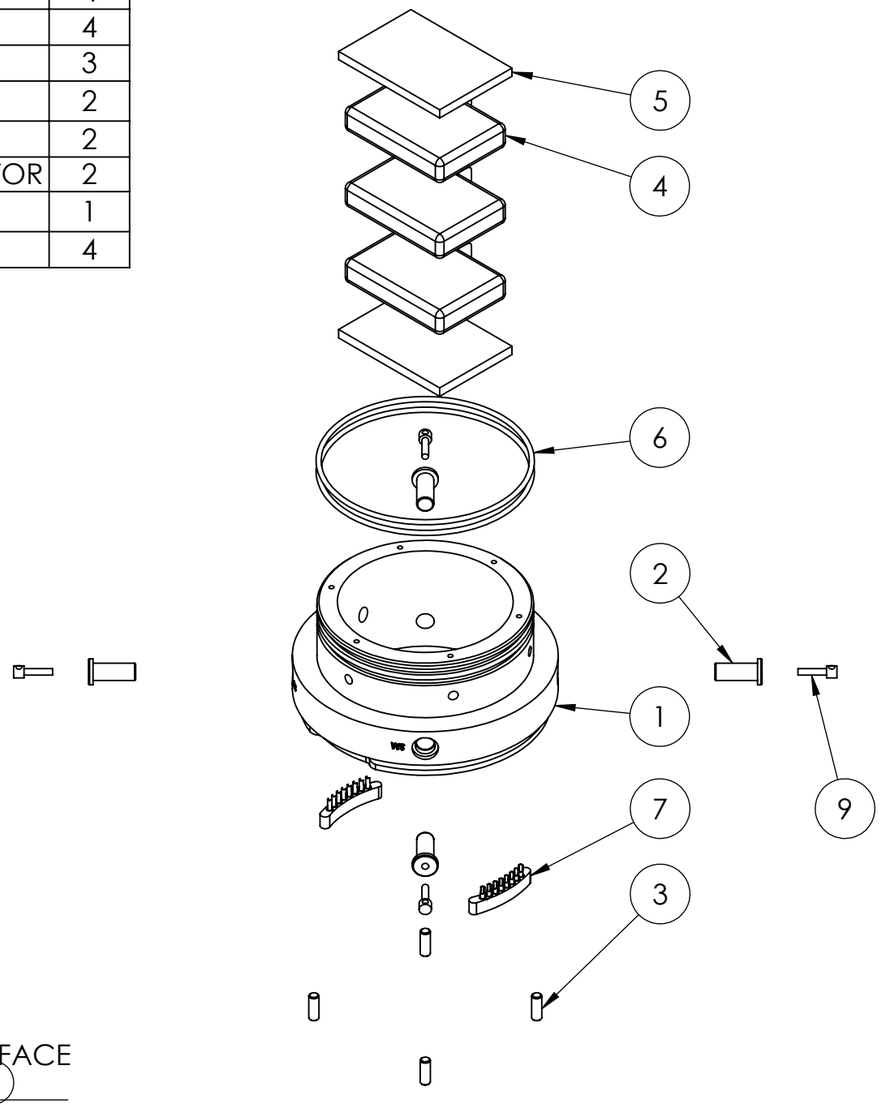

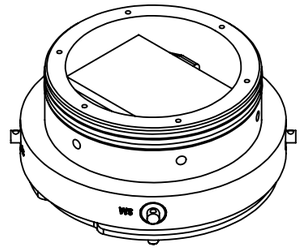

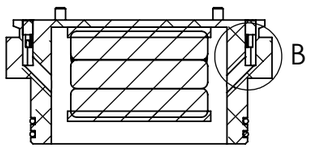

SECTION A-A

8 APPLIED AT INTERFACE BETWEEN 1 AND 7

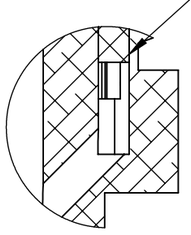

DETAIL B
SCALE 1 : 1

DRAWING STANDARD BS 8888:2020	DRAWN BY AP	UNCONTROLLED IF PRINTED	LURA LEEDS UNIVERSITY ROCKETRY ASSOCIATION
TOLERANCE STANDARD ISO 2768-mk	DRAWN DATE 04/09/23	BREAK ALL SHARP EDGES	ALL DIMENSIONS IN MM UNLESS STATED OTHERWISE
UNSPECIFIED FINISHES Ra 1.6	SIGNOFF BY TT	MATERIAL N/A	MASS (g) 1265.45 / SCALE 1:3 / SHEET 1 OF 1 / A3
UNSPECIFIED THREADS BS 3643/2:1981 6H/6g	SIGNOFF DATE 05/09/23	DESCRIPTION FORWARD AVIONICS BAY CAP ASSEMBLY	
		DRAWING # LA-0026	

ITEM NO.	PART #	DESCRIPTION	QTY.
1	SSCF-M3-35-A2	18-8 STAINLESS STEEL SOCKET HEAD SCREWS	2
2	LOCTITE-242	MEDIUM STRENGTH THREAD LOCKING COMPOUND	1
3	DISTRIBUTION_BOARD_PCBA		1
4	LA-0060	COTS CARRIER ASSEMBLY	1
5	FLIGHT_DATA_RECORDER_PCBA		1
6	FLIGHT_COMPUTER_PCBA		1

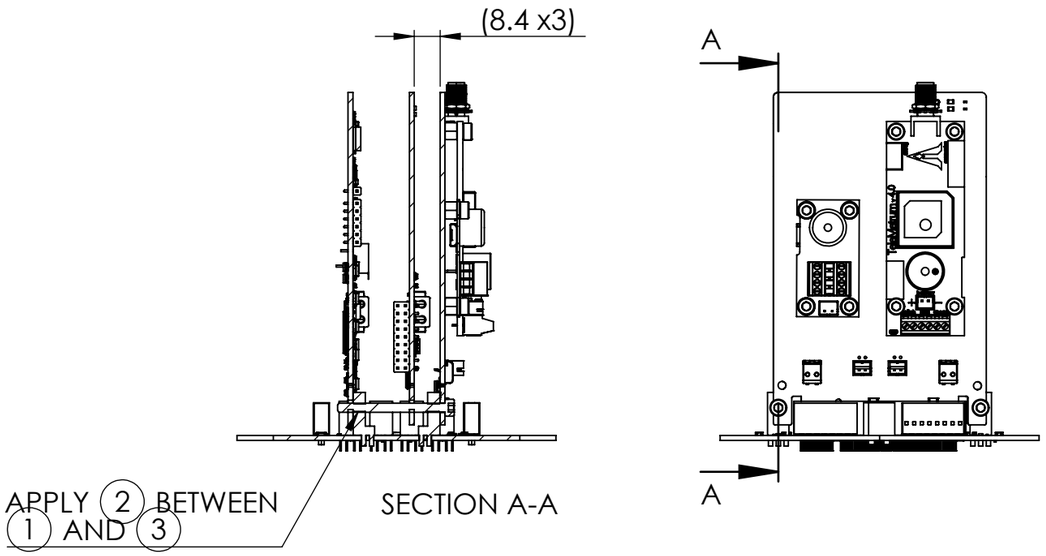

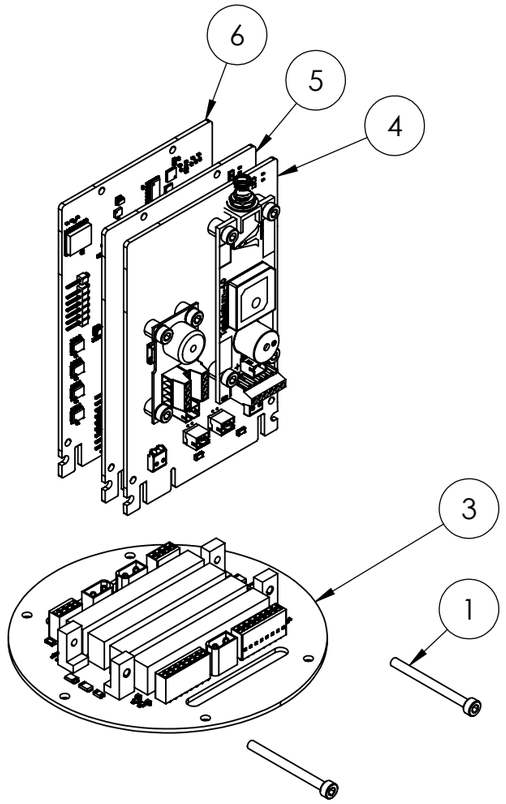

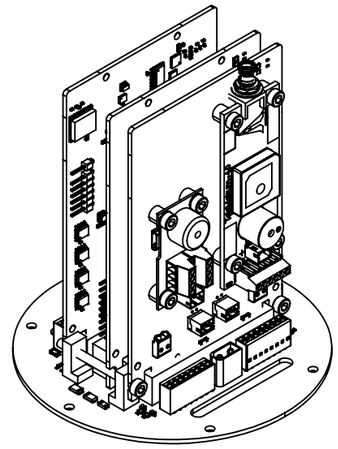

DRAWING STANDARD BS 8888:2020	DRAWN BY TT	**UNCONTROLLED IF PRINTED**	LURA LEEDS UNIVERSITY ROCKETRY ASSOCIATION
TOLERANCE STANDARD ISO 2768-mk	DRAWN DATE 08/04/24	BREAK ALL SHARP EDGES	ALL DIMENSIONS IN MM UNLESS STATED OTHERWISE
UNSPECIFIED FINISHES Ra 1.6	SIGNOFF BY TT	MATERIAL N/A	MASS (g) 98.57 / SCALE 1:2 / SHEET 1 OF 1 / A3
UNSPECIFIED THREADS BS 3643/2:1981 6H/6g	SIGNOFF DATE 08/04/24	DESCRIPTION AVIONICS CARDS ASSEMBLY	
		DRAWING # LA-0027	

ITEM NO.	PART #	DESCRIPTION	QTY.
1	LP-0031	AVIONICS CAGE	1
2	TAOGLAS-TI.10.0111		1

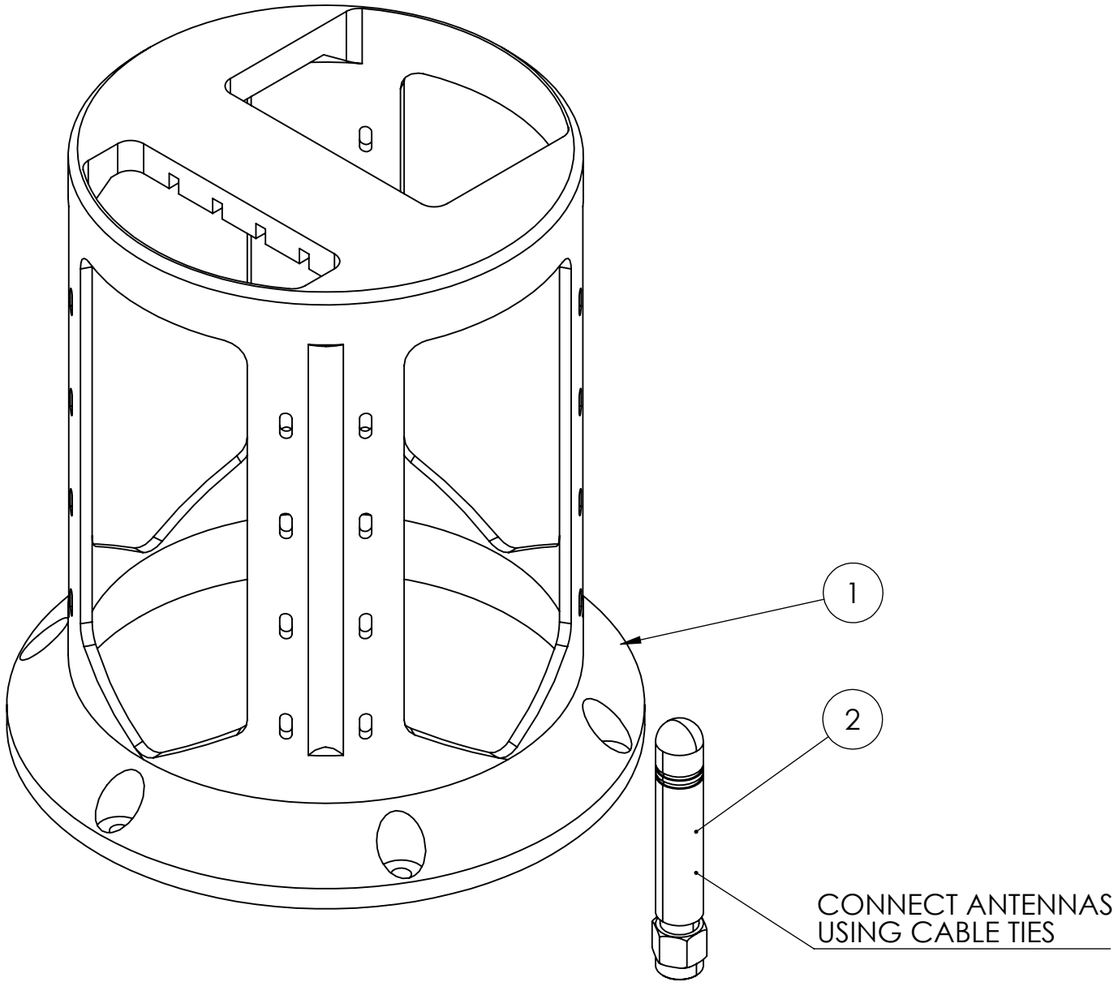

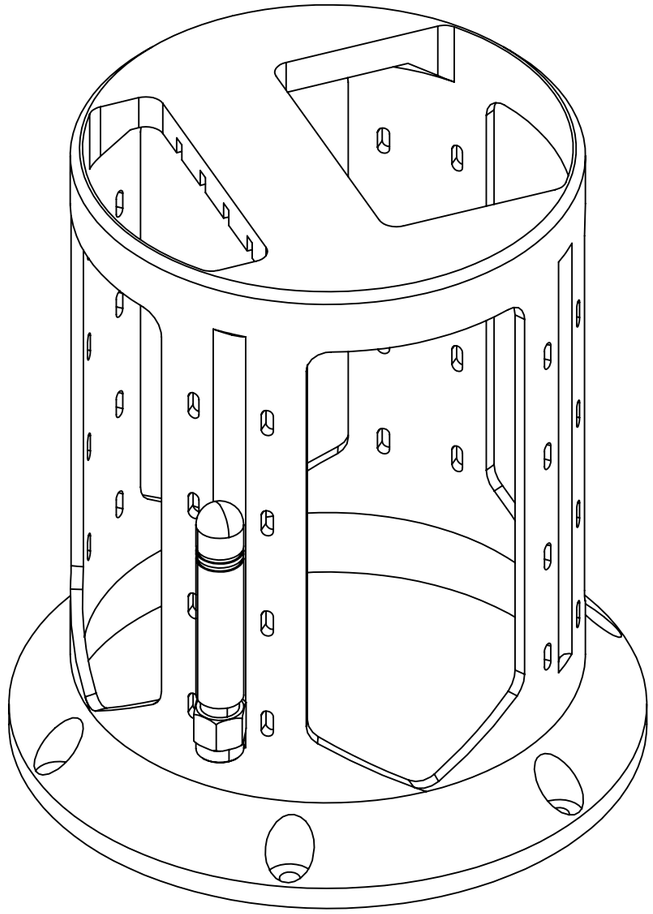

DRAWING STANDARD BS 8888:2020	DRAWN BY AP	UNCONTROLLED IF PRINTED	LURA LEEDS UNIVERSITY ROCKETRY ASSOCIATION
TOLERANCE STANDARD ISO 2768-mk	DRAWN DATE 11/04/24	BREAK ALL SHARP EDGES	
UNSPECIFIED FINISHES Ra 1.6	SIGNOFF BY TT	MATERIAL N/A	ALL DIMENSIONS IN MM UNLESS STATED OTHERWISE
UNSPECIFIED THREADS BS 3643/2:1981 6H/6g	SIGNOFF DATE 11/04/24	DESCRIPTION AVIONICS CAGE ASSEMBLY	MASS (g) 94.25 / SCALE 1:1 / SHEET 1 OF 1 / A3
		DRAWING # LA-0028	

ITEM NO.	PART #	DESCRIPTION	QTY.
1	LA-0026	FORWARD AVIONICS BAY CAP ASSEMBLY	1
2	LA-0027	AVIONICS CARDS ASSEMBLY	1
3	LA-0028	AVIONICS CAGE ASSEMBLY	1
4	SSCF-M3-12-A2	SOCKET HEAD SCREW	6
5	HPW-M3-V1-A2	316 STAINLESS STEEL WASHER	6

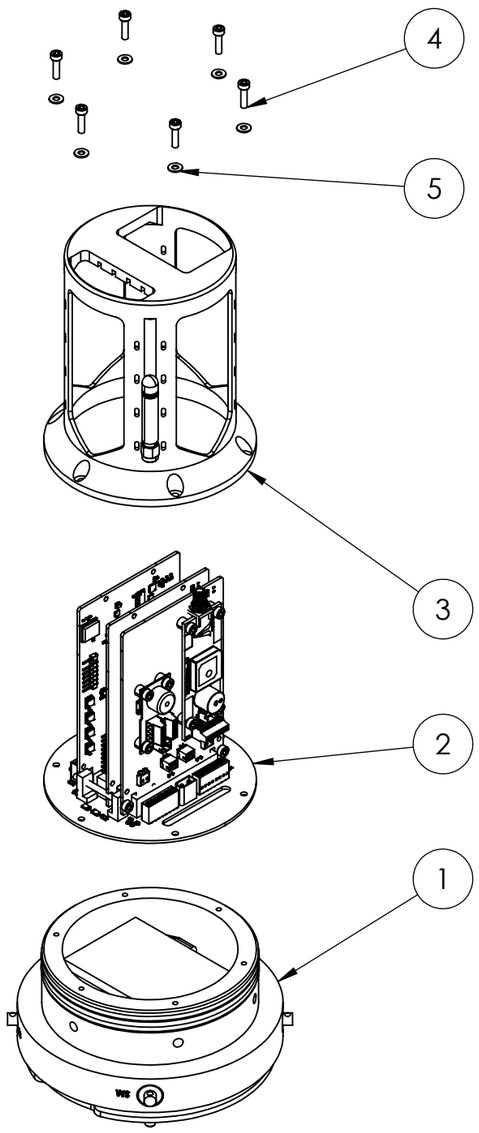

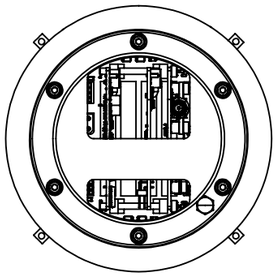

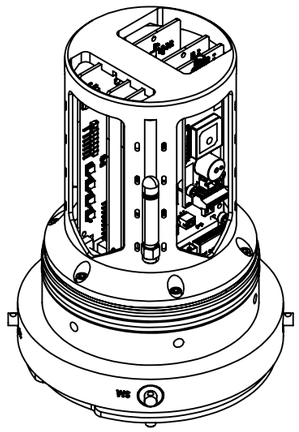

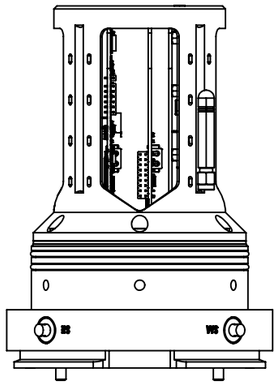

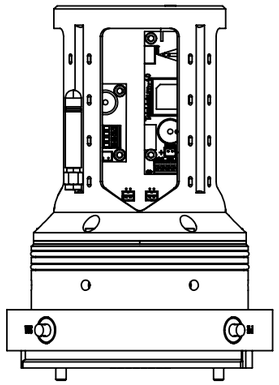

DRAWING STANDARD BS 8888:2020	DRAWN BY TT	UNCONTROLLED IF PRINTED	LURA LEEDS UNIVERSITY ROCKETRY ASSOCIATION
TOLERANCE STANDARD ISO 2768-mk	DRAWN DATE 11/04/24	BREAK ALL SHARP EDGES	ALL DIMENSIONS IN MM UNLESS STATED OTHERWISE
UNSPECIFIED FINISHES Ra 1.6	SIGNOFF BY TT	MATERIAL N/A	MASS (g) 1466.04 / SCALE 1:3 / SHEET 1 OF 1 / A3
UNSPECIFIED THREADS BS 3643/2:1981 6H/6g	SIGNOFF DATE 11/04/24	DESCRIPTION AVIONICS SLED	
		DRAWING # LA-0024	

ITEM NO.	PART #	DESCRIPTION	QTY.
1	LP-0027	AVIONICS BAY WALL	1
2	LA-0024	AVIONICS SLED	1
3	LA-0025	AFT AVIONICS BAY CAP ASSEMBLY	1
4	AMPHENOL-VENT-PQ1NBK-N8002		4
5	SSCF-M6-12-A2		12

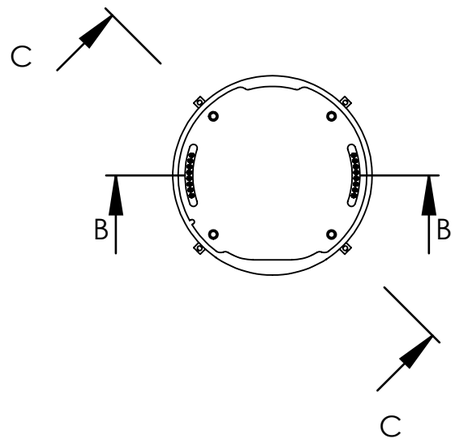

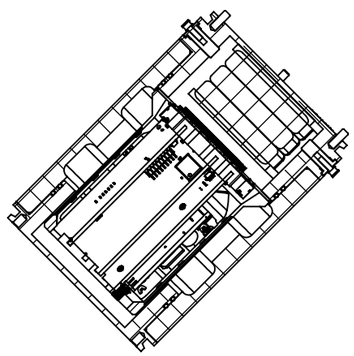

SECTION C-C

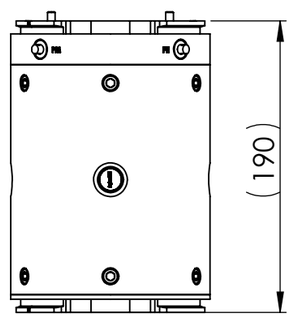

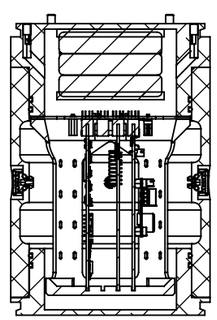

SECTION B-B

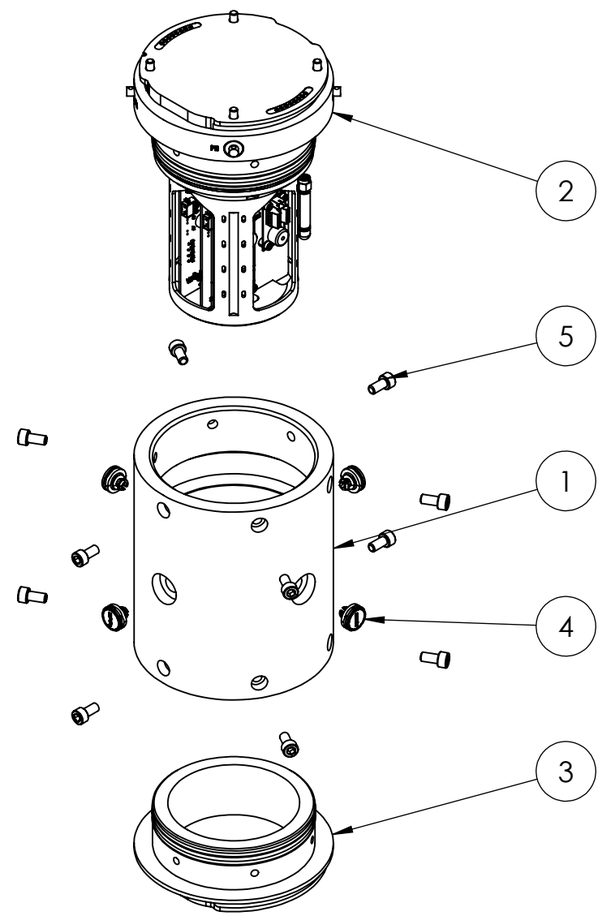

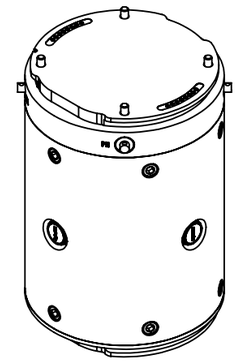

DRAWING STANDARD BS 8888:2020	DRAWN BY TT	**UNCONTROLLED IF PRINTED**	LURA LEEDS UNIVERSITY ROCKETRY ASSOCIATION
TOLERANCE STANDARD ISO 2768-mk	DRAWN DATE 11/04/24	BREAK ALL SHARP EDGES	ALL DIMENSIONS IN MM UNLESS STATED OTHERWISE
UNSPECIFIED FINISHES Ra 1.6	SIGNOFF BY TT	MATERIAL N/A	MASS (g) 2531.12 / SCALE 1:4 / SHEET 1 OF 1 / A3
UNSPECIFIED THREADS BS 3643/2:1981 6H/6g	SIGNOFF DATE 11/04/24	DESCRIPTION AVIONICS BAY	
		DRAWING # LA-0022	

ITEM NO.	PART #	DESCRIPTION	QTY.
1	LP-0034	RECOVERY BAY COUPLER	1
2	RICHMOND_INDUSTRIES-200_SERIES-2KN		1
3	LP-0035	EYEBOLT EXTENSION BAR	1
4	YOKE-291K		1
5	LOCTITE-242	MEDIUM STRENGTH THREAD LOCKING COMPOUND	1
6	LA-0012	MALE UNIVERSAL COUPLER CONNECTOR	2
7	SPARKFUN-13879		1
8	LP-0049	LOAD CELL AMPLIFIER CAP	1
9	LP-0050	LOAD CELL AMPLIFIER ISOLATION PLATE	1
10	SSCF-M3-6-A2	18-8 STAINLESS STEEL SOCKET HEAD SCREWS	4

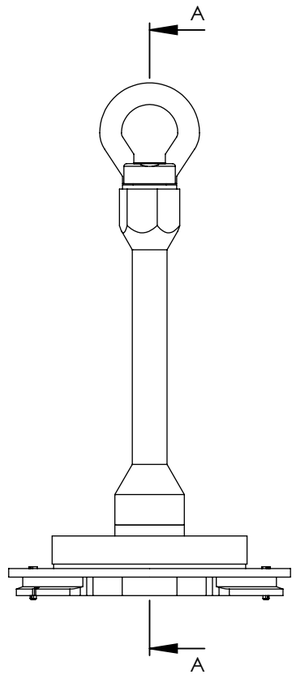

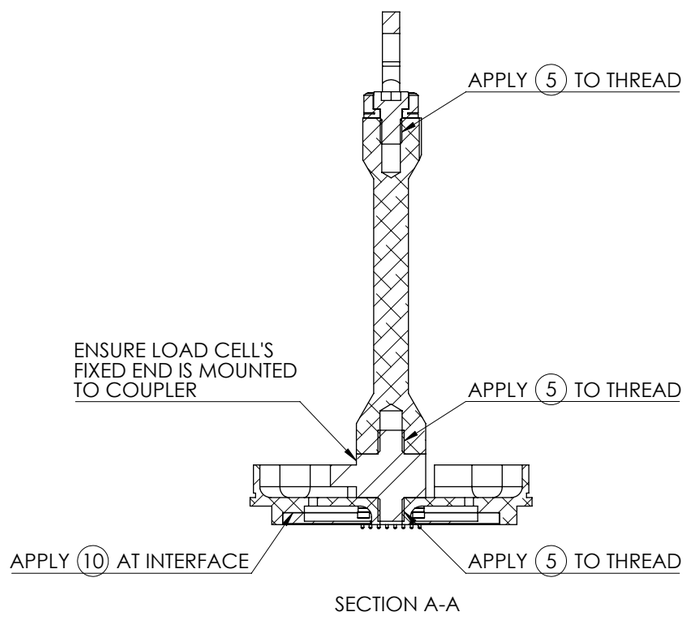

SECTION A-A

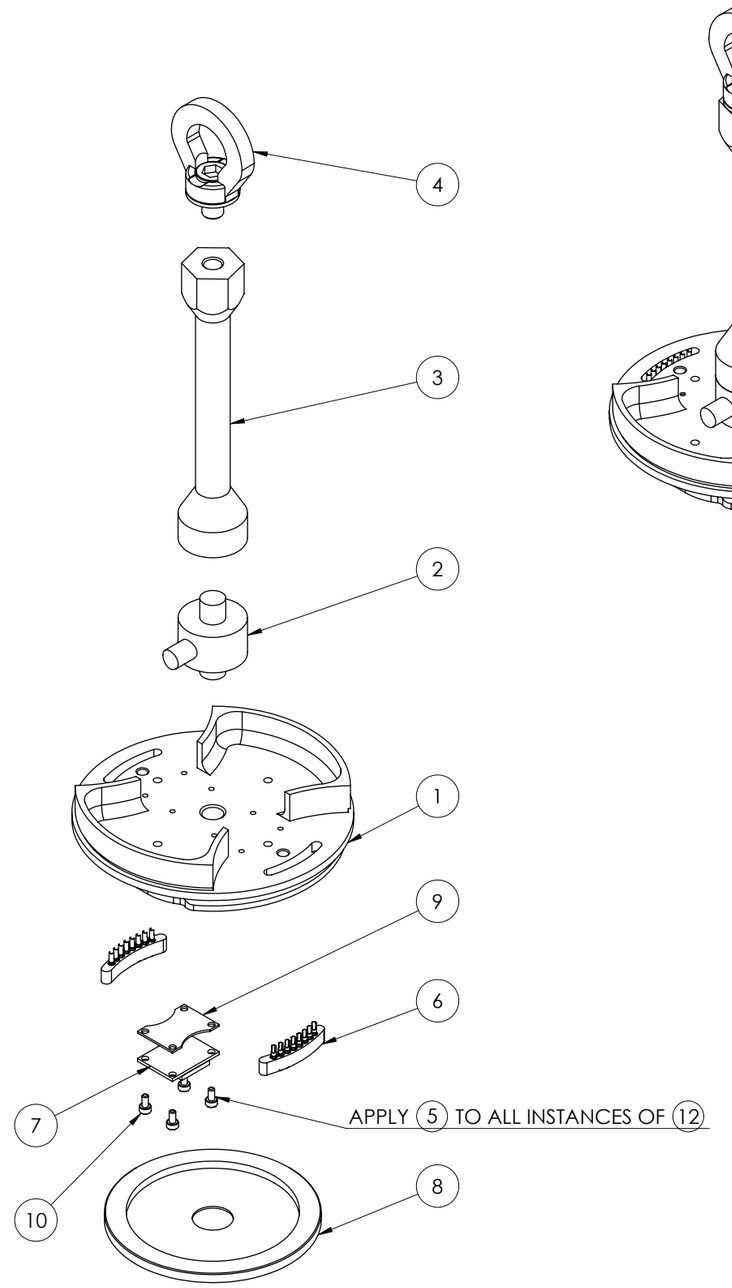

DRAWING STANDARD BS 8888:2020	DRAWN BY TT	**UNCONTROLLED IF PRINTED**	LURA LEEDS UNIVERSITY ROCKETRY ASSOCIATION
TOLERANCE STANDARD ISO 2768-mk	DRAWN DATE 31/10/23	BREAK ALL SHARP EDGES	ALL DIMENSIONS IN MM UNLESS STATED OTHERWISE
UNSPECIFIED FINISHES Ra 1.6	SIGNOFF BY TT	MATERIAL N/A	MASS (g) 709.90 / SCALE 1:2 / SHEET 1 OF 1 / A2
UNSPECIFIED THREADS BS 3643/2:1981 6H/6g	SIGNOFF DATE 31/10/23	DESCRIPTION RECOVERY BAY COUPLER ASSEMBLY	
		DRAWING # LA-0032	

ITEM NO.	PART #	DESCRIPTION	QTY.
1	LP-0037	MOON BAY ROD CONDUIT	1
2	LP-0038	MOON BAY CABLE CONDUIT	2
3	LP-0039	MOON BAY VERTEBRA	4
4	3M-DP490	EPOXY	1

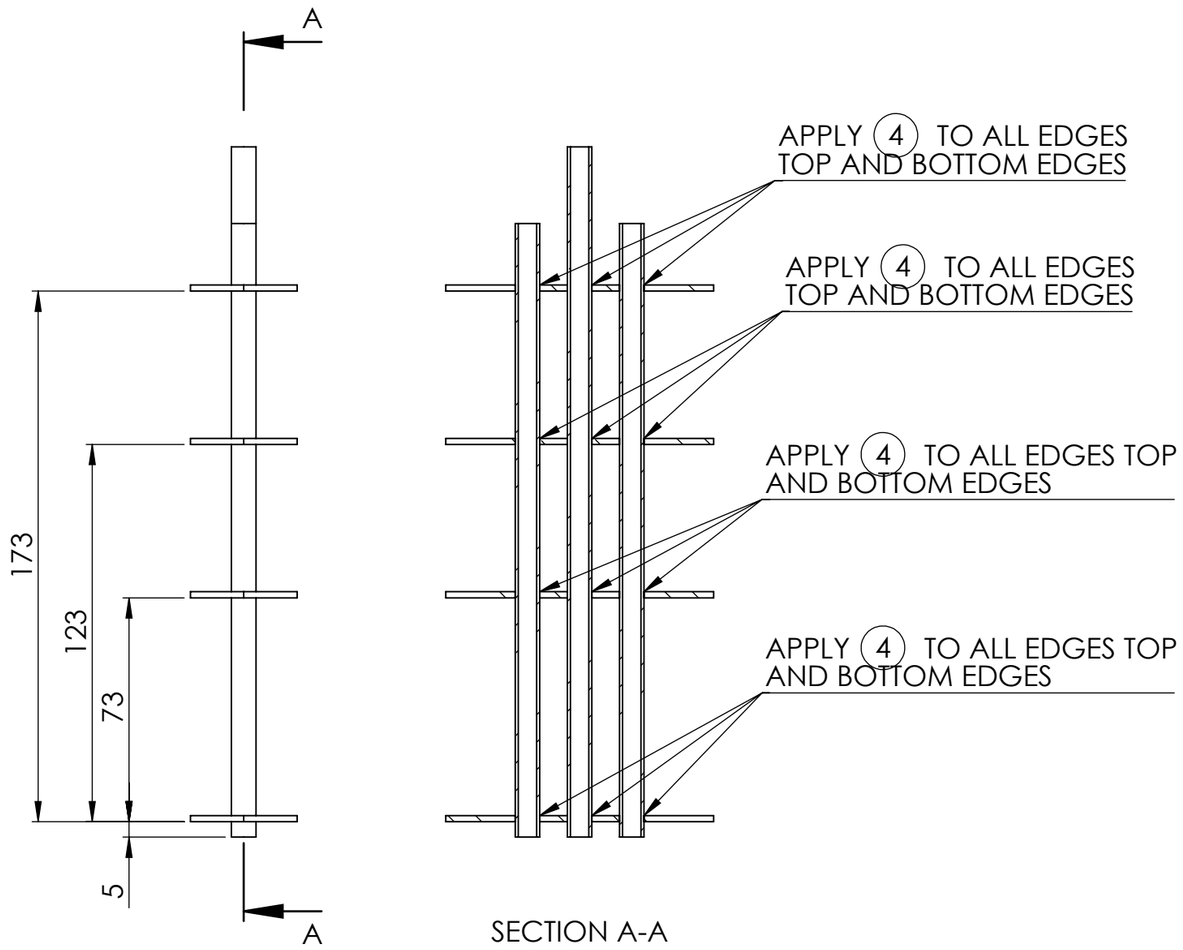

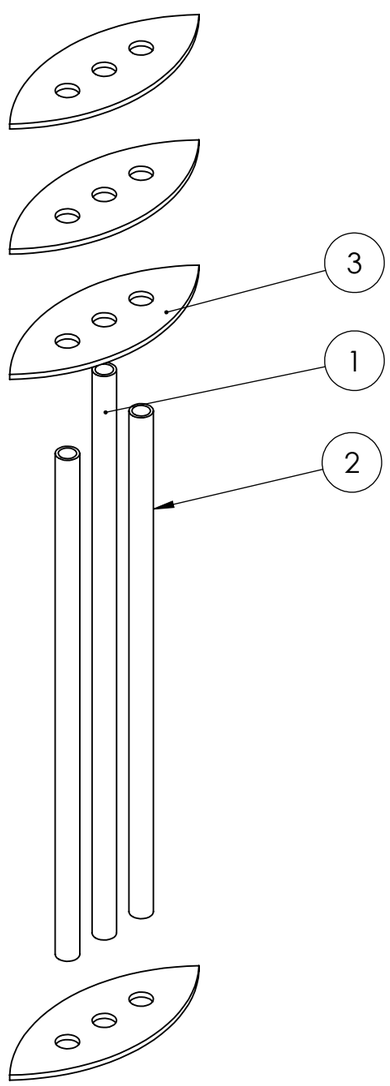

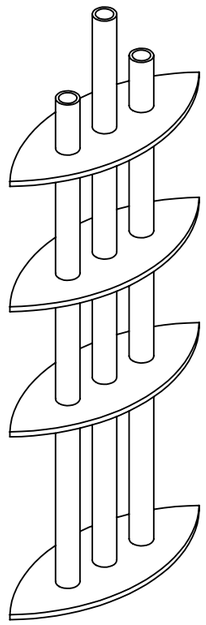

DRAWING STANDARD BS 8888:2020	DRAWN BY AK	UNCONTROLLED IF PRINTED	LURA LEEDS UNIVERSITY ROCKETRY ASSOCIATION
TOLERANCE STANDARD ISO 2768-mk	DRAWN DATE 04/09/23	BREAK ALL SHARP EDGES	
UNSPECIFIED FINISHES Ra 1.6	SIGNOFF BY TT	MATERIAL N/A	ALL DIMENSIONS IN MM UNLESS STATED OTHERWISE
UNSPECIFIED THREADS BS 3643/2:1981 6H/6g	SIGNOFF DATE 05/09/23	DESCRIPTION MOON BAY SPINE	MASS (g) 48.30 · SCALE 1:2 · SHEET 1 OF 1 · A3
		DRAWING # LA-0034	

ITEM NO.	PART #	DESCRIPTION	QTY.
1	LA-0032	RECOVERY BAY COUPLER ASSEMBLY	1
2	LP-0033	RECOVERY BAY TUBE	1
3	LP-0045	REINFORCEMENT TUBE	1
4	LA-0034	MOON BAY SPINE	2
5	LP-0036	MOON BAY SHELL	2
6	3M-DP490	EPOXY	1
7	LP-0082	MOON BAY ROD	2
8	LOCTITE-242	MEDIUM STRENGTH THREAD LOCKING COMPOUND	1
9	LP-0088	ANTI-KICKBACK TAB	2

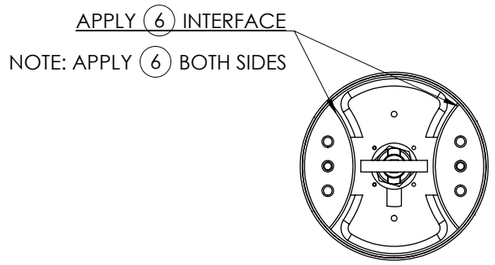

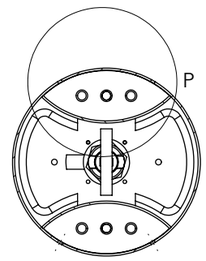

SECTION O-O

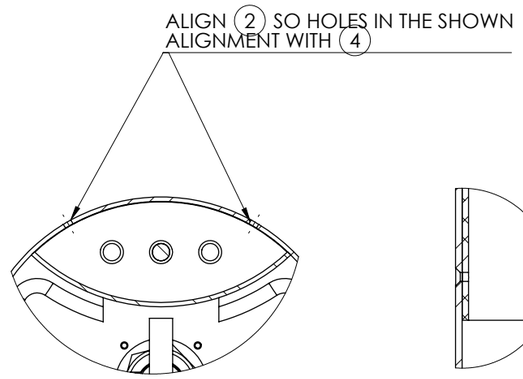

DETAIL P
SCALE 2 : 3

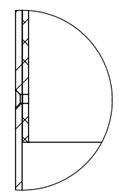

DETAIL N
SCALE 1 : 1

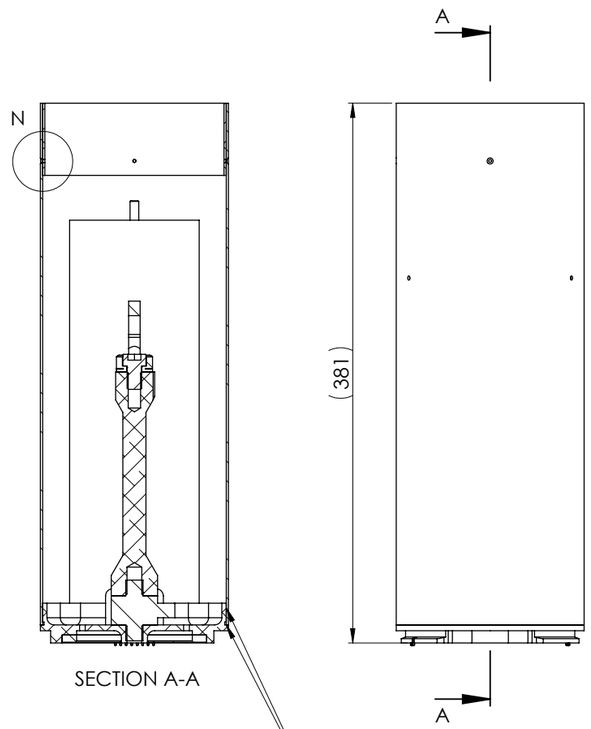

SECTION A-A

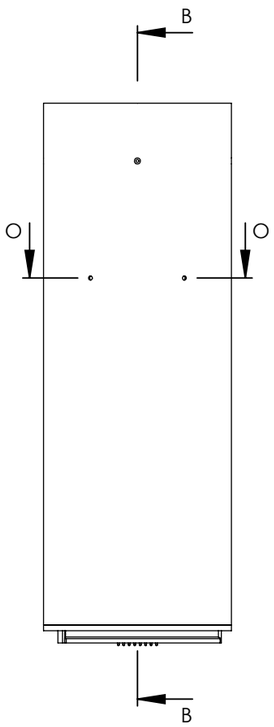

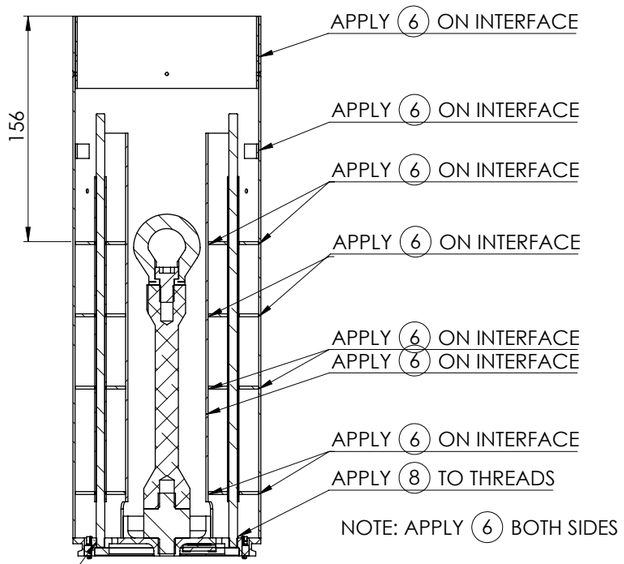

SECTION B-B

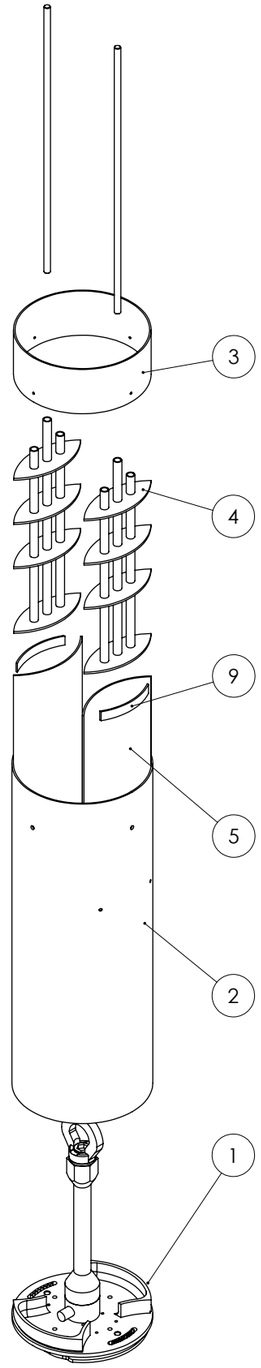

SCALE 1 : 4

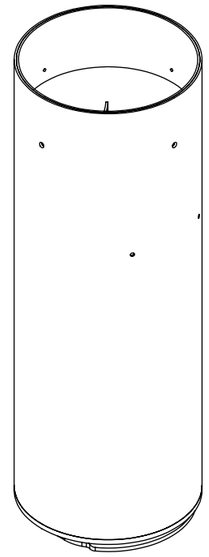

APPLY 6 ON INTERFACE
NOTE: APPLY 6 BOTH SIDES

APPLY 8 TO THREADS

DRAWING STANDARD BS 8888:2020	DRAWN BY AK	UNCONTROLLED IF PRINTED	LURA LEEDS UNIVERSITY ROCKETRY ASSOCIATION
TOLERANCE STANDARD ISO 2768-mk	DRAWN DATE 07/04/24	BREAK ALL SHARP EDGES	ALL DIMENSIONS IN MM UNLESS STATED OTHERWISE
UNSPECIFIED FINISHES Ra 1.6	SIGNOFF BY TT	MATERIAL N/A	
UNSPECIFIED THREADS BS 3643/2:1981 6H/6g	SIGNOFF DATE 07/04/24	DESCRIPTION RECOVERY BAY STRUCTURE	MASS (g) 1491.90 / SCALE 1:3 / SHEET 1 OF 1 / A2
		DRAWING # LA-0031	

ITEM NO.	PART NUMBER	DESCRIPTION	QTY.
1	LP-0075		1
2	LP-0081	Moon Bay Block Charge Plug Gasket	2
3	92605A300	ROPE CUTTER ANVIL	1
4	LP-0080		2
5	ACCU-HORT-M12-1.5-12.0-HDPE		1
6	LP-0086	ROPE CUTTER INSERT	1
7	LP-0078	RC BLADE	1
8	95280A104	PLASTIC NARROW CHEESE HEAD SLOTTED SCREWS	2

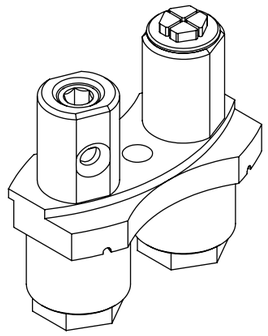

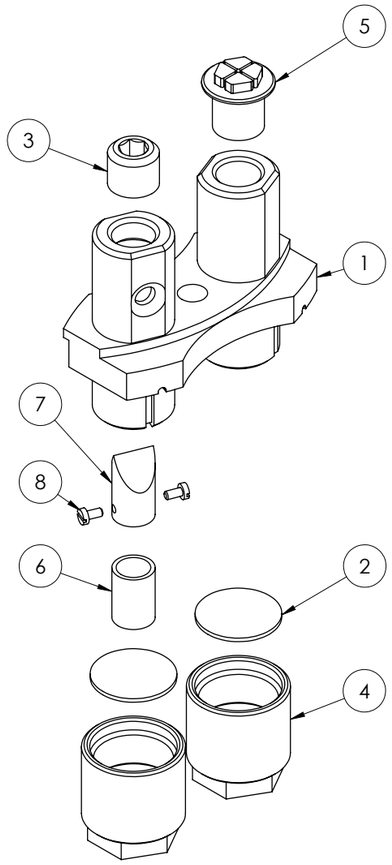

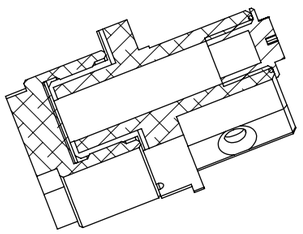

SECTION E-E

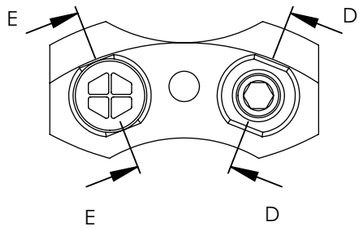

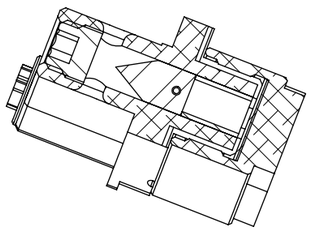

SECTION D-D

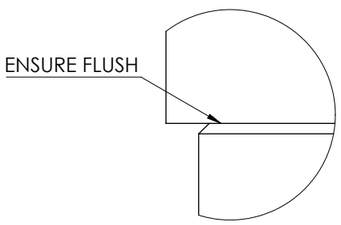

DETAIL B
SCALE 4 : 1

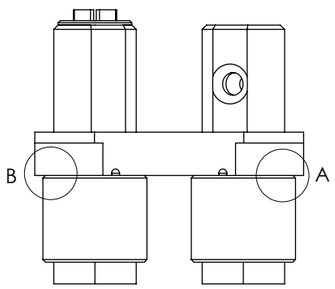

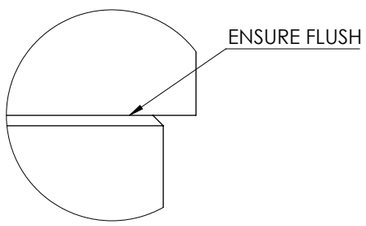

DETAIL A
SCALE 4 : 1

DRAWING STANDARD BS 8888:2020	DRAWN BY TT	**UNCONTROLLED IF PRINTED**	LURA LEEDS UNIVERSITY ROCKETRY ASSOCIATION
TOLERANCE STANDARD ISO 2768-mk	DRAWN DATE 07/04/24	BREAK ALL SHARP EDGES	ALL DIMENSIONS IN MM UNLESS STATED OTHERWISE
UNSPECIFIED FINISHES Ra 1.6	SIGNOFF BY TT	MATERIAL N/A	MASS (g) 123.91
UNSPECIFIED THREADS BS 3643/2:1981 6H/6g	SIGNOFF DATE 07/04/24	DESCRIPTION MOON BAY BLOCK ASSEMBLY	SCALE 1:1
		DRAWING # LA-0054	SHEET 1 OF 1
			A2

ITEM NO.	PART #	DESCRIPTION	QTY.
1	LA-0031	RECOVERY BAY STRUCTURE	1
2	SWELLPRO-LB1		1
3	LOCTITE-242	MEDIUM STRENGTH THREAD LOCKING COMPOUND	1
4	LA-0054	Moon Bay Block Assembly	2
5	91812A423	316 STAINLESS STEEL WEDGE LOCK WASHER	2
6	HPN-M6-A2	18-8 STAINLESS STEEL HEX NUT	2

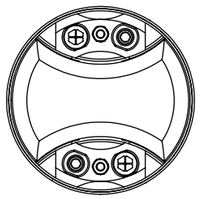

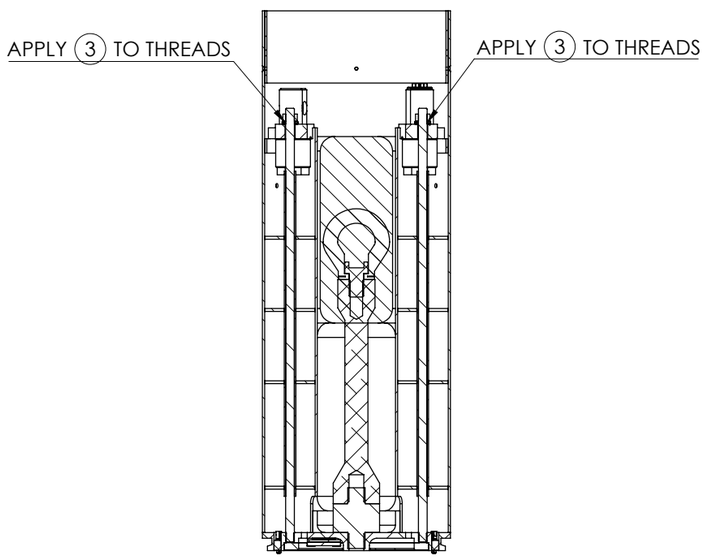

SECTION A-A

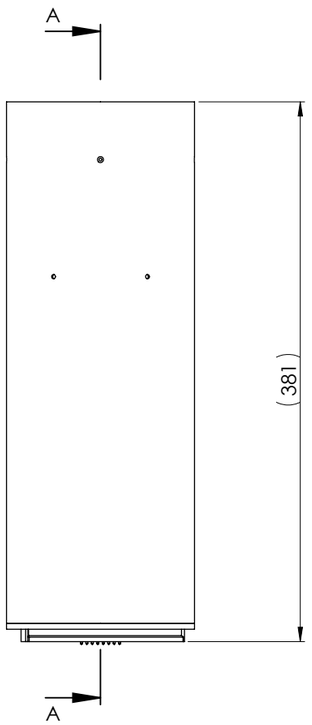

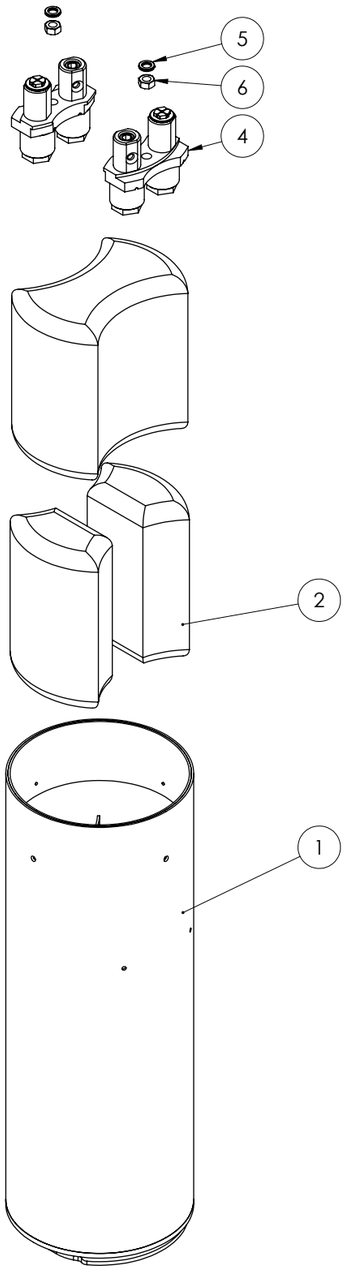

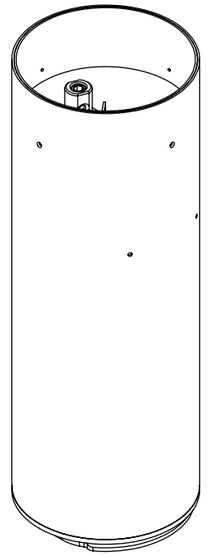

DRAWING STANDARD BS 8888:2020	DRAWN BY AK	**UNCONTROLLED IF PRINTED**	LURA LEEDS UNIVERSITY ROCKET RY ASSOCIATION
TOLERANCE STANDARD ISO 2768-mk	DRAWN DATE 07/04/24	BREAK ALL SHARP EDGES	ALL DIMENSIONS IN MM UNLESS STATED OTHERWISE
UNSPECIFIED FINISHES Ra 1.6	SIGNOFF BY TT	MATERIAL N/A	
UNSPECIFIED THREADS BS 3643/2:1981 6H/6g	SIGNOFF DATE 07/04/24	DESCRIPTION RECOVERY BAY	MASS (g) 2726.24 · SCALE 1:3 · SHEET 1 OF 1 · A2
		DRAWING # LA-0029	

ITEM NO.	PART #	DESCRIPTION	QTY.
1	LP-0042	NOSECONE ROD	1
2	ACCU-HTBHN-M6-20-A2		1

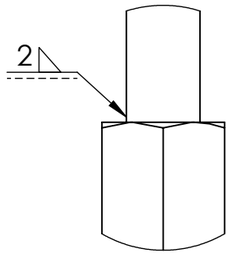

DETAIL A
SCALE 2 : 1

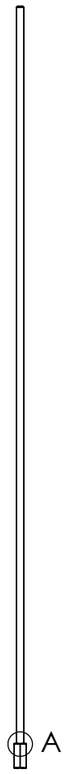

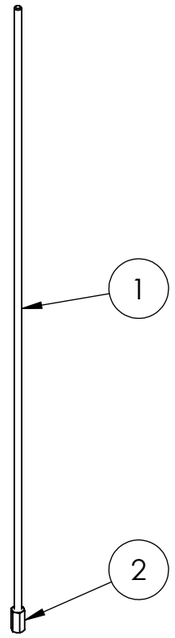

DRAWING STANDARD BS 8888:2020	DRAWN BY TT	**UNCONTROLLED IF PRINTED**	LURA LEEDS UNIVERSITY ROCKETRY ASSOCIATION
TOLERANCE STANDARD ISO 2768-mk	DRAWN DATE 07/04/24	BREAK ALL SHARP EDGES	ALL DIMENSIONS IN MM UNLESS STATED OTHERWISE
UNSPECIFIED FINISHES Ra 1.6	SIGNOFF BY TT	MATERIAL N/A	MASS (g) 148.78 / SCALE 1:5 / SHEET 1 OF 1 / A3
UNSPECIFIED THREADS BS 3643/2:1981 6H/6g	SIGNOFF DATE 07/04/24	DESCRIPTION BALLAST ROD ASSEMBLY	
		DRAWING # LA-0039	

ITEM NO.	PART NUMBER	DESCRIPTION	QTY.
1	LP-0074	NOSECONE SAFETY TIP	1
2	RS-278-578		1

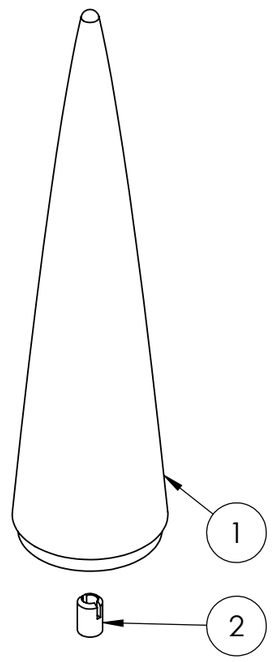

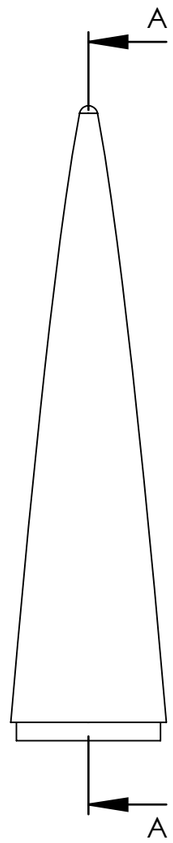

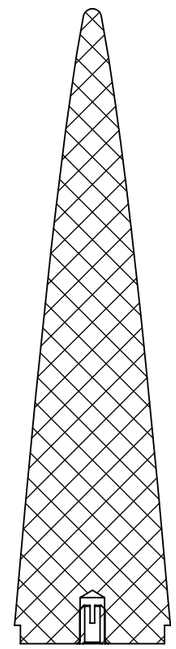

SECTION A-A

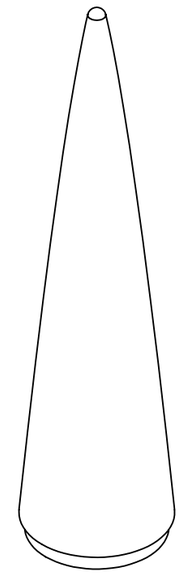

DRAWING STANDARD BS 8888:2020	DRAWN BY TT	**UNCONTROLLED IF PRINTED**	LURA LEEDS UNIVERSITY ROCKETRY ASSOCIATION
TOLERANCE STANDARD ISO 2768-mk	DRAWN DATE 07/04/24	BREAK ALL SHARP EDGES	
UNSPECIFIED FINISHES Ra 1.6	SIGNOFF BY TT	MATERIAL N/A	ALL DIMENSIONS IN MM UNLESS STATED OTHERWISE
UNSPECIFIED THREADS BS 3643/2:1981 6H/6g	SIGNOFF DATE 07/04/24	DESCRIPTION SAFE NOSECONE TIP ASSEMBLY	MASS (g) 177.55 / SCALE 1:2 / SHEET 1 OF 1 / A3
		DRAWING # LA-0056	

ITEM NO.	PART NUMBER	DESCRIPTION	QTY.
1	LP-0040	NOSECONE	1
2	LP-0041	NOSECONE TIP	1
3	ACCU-HTBHN-M6-20-A2		1
4	LP-0042	NOSECONE ROD	1
5	LP-0047	NOSECONE BALLAST	12
6	HPN-M6-A2	18-8 STAINLESS STEEL HEX NUT	1
7	LP-0043	NOSECONE BULKHEAD	1
8	BARNWELL-1150-30	O-RING	1
9	ACCU-SLE-M6-F-A2		1
10	LOCTITE-242	MEDIUM STRENGTH THREAD LOCKING COMPOUND	1
11	EVO-STIK-PLUMER's_MAIT		1

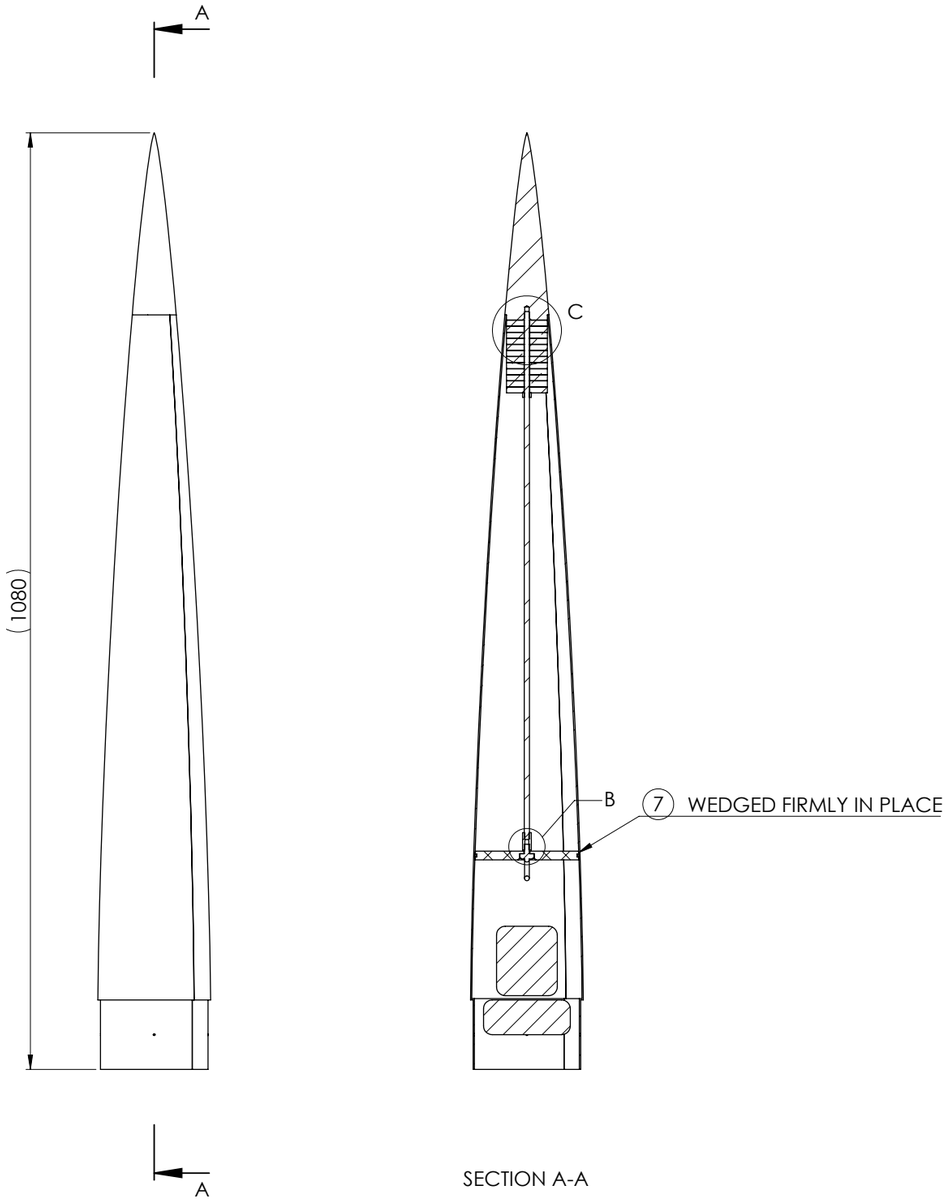

SECTION A-A

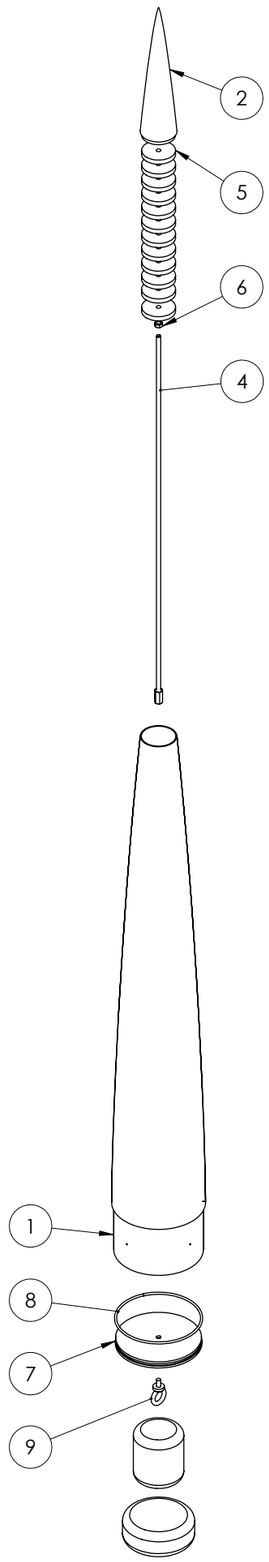

SCALE 1 : 6

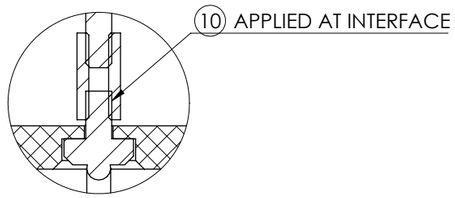

DETAIL B
SCALE 1 : 1

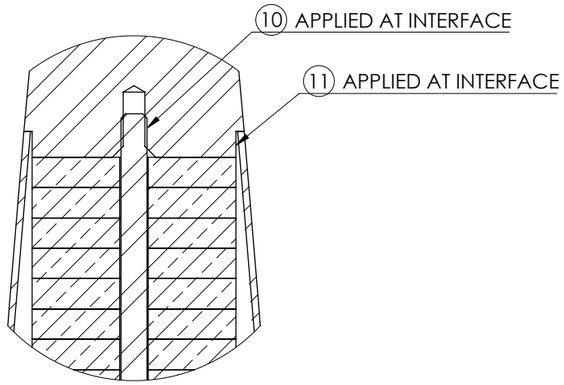

DETAIL C
SCALE 1 : 1

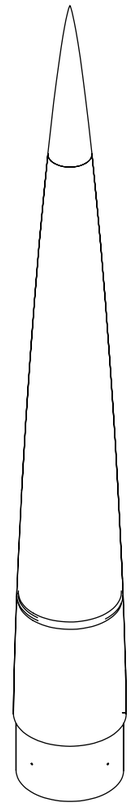

NOTES:

- HIGH ALTITUDE CONFIGURATION SHOWN

DRAWING STANDARD BS 8888:2020	DRAWN BY GR	**UNCONTROLLED IF PRINTED**	LURA LEEDS UNIVERSITY ROCKETRY ASSOCIATION
TOLERANCE STANDARD ISO 2768-mk	DRAWN DATE 07/04/24	BREAK ALL SHARP EDGES	ALL DIMENSIONS IN MM UNLESS STATED OTHERWISE
UNSPECIFIED FINISHES Ra 1.6	SIGNOFF BY TT	MATERIAL N/A	MASS (g) 4057.65 / SCALE 1:5 / SHEET 1 OF 2 / A2
UNSPECIFIED THREADS BS 3643/2:1981 6H/6g	SIGNOFF DATE 07/04/24	DESCRIPTION NOSECONE	
		DRAWING # LA-0030	

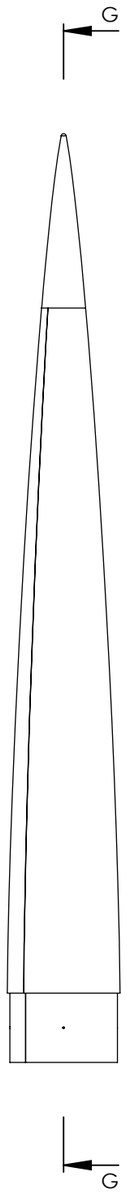

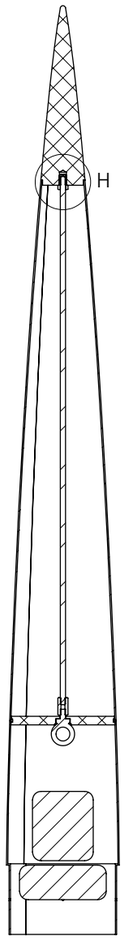

SECTION G-G

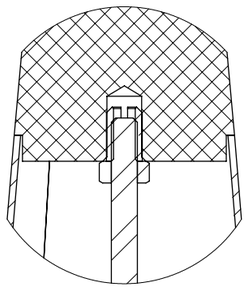

DETAIL H
SCALE 1 : 1

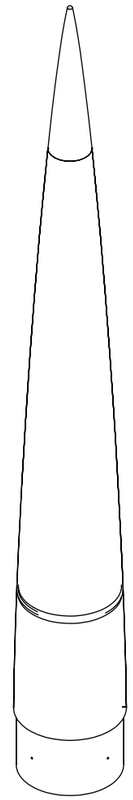

NOTES:
- LOW ALTITUDE CONFIGURATION SHOWN

DRAWING STANDARD BS 8888:2020	DRAWN BY TT	**UNCONTROLLED IF PRINTED**	LURA LEEDS UNIVERSITY ROCKETRY ASSOCIATION
TOLERANCE STANDARD ISO 2768-mk	DRAWN DATE 07/04/24	BREAK ALL SHARP EDGES	ALL DIMENSIONS IN MM UNLESS STATED OTHERWISE
UNSPECIFIED FINISHES Ra 1.6	SIGNOFF BY TT	MATERIAL N/A	MASS (g) 4057.65
UNSPECIFIED THREADS BS 3643/2:1981 6H/6g	SIGNOFF DATE 07/04/24	DESCRIPTION NOSECONE	SCALE 1:5
		DRAWING # LA-0030	SHEET 2 OF 2
			A2

ITEM NO.	PART #	DESCRIPTION	QTY.	QTY.
1	LA-0029	RECOVERY BAY	1	1
2	LA-0030	NOSECONE	1	-
3	SFK-M2-6-V2-N	M2 NYLON SHEAR PINS	4	4
4	LOCTITE-577093	LOCTITE SUPERGLUE PRECISION	1	1
5	LA-0030	NOSECONE	-	1

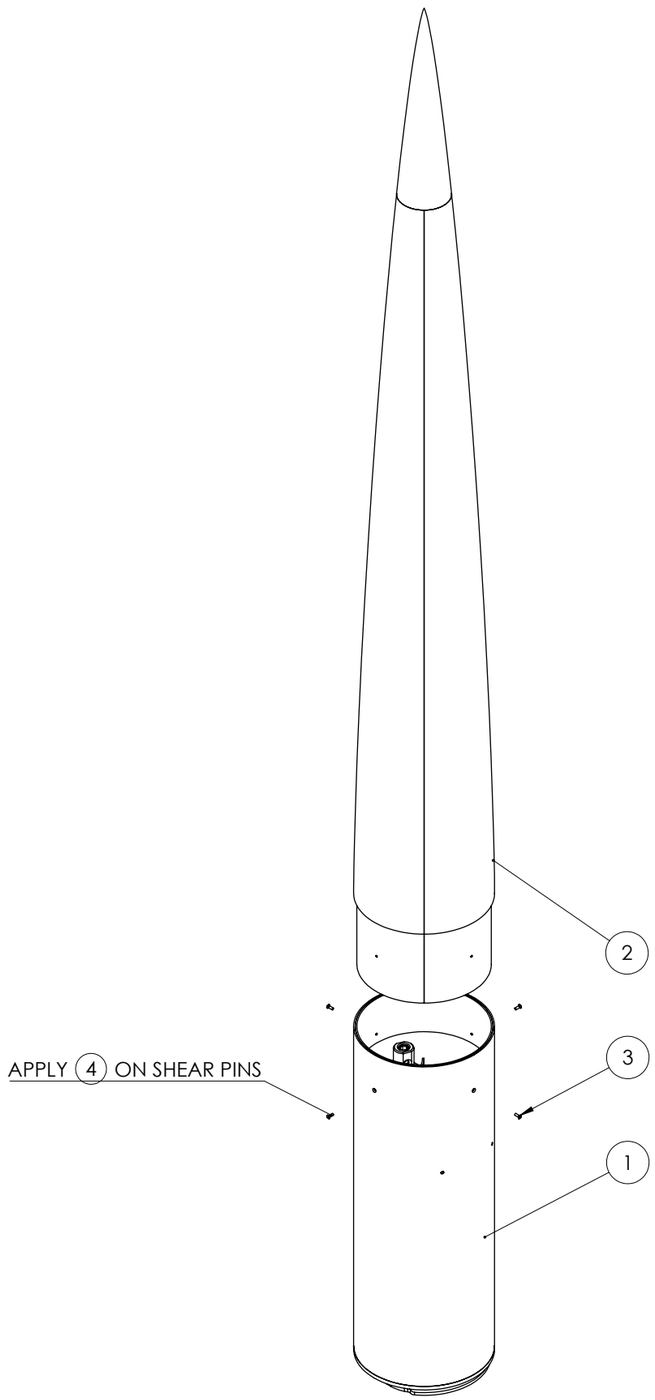

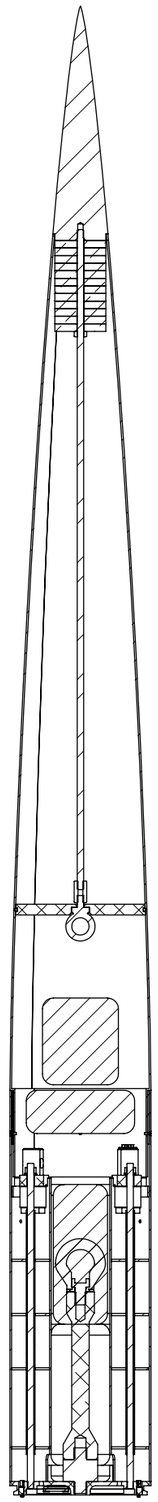

SECTION A-A

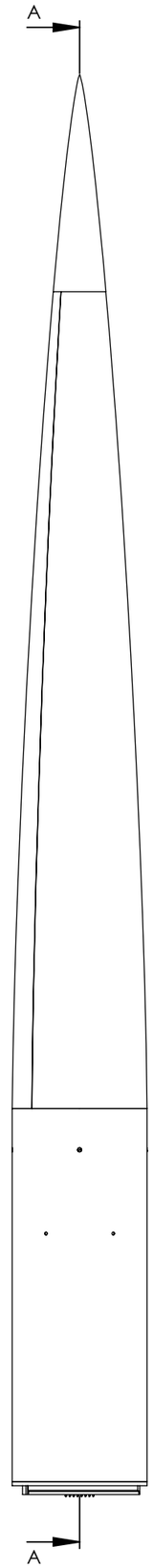

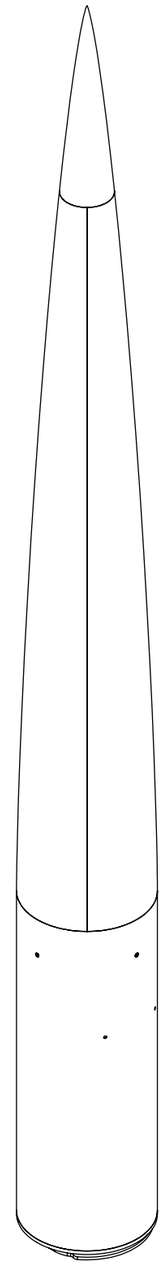

NOTES:
- HIGH ALTITUDE CONFIGURATION SHOWN

DRAWING STANDARD BS 8888:2020	DRAWN BY AK	**UNCONTROLLED IF PRINTED**	LURA LEEDS UNIVERSITY ROCKETRY ASSOCIATION
TOLERANCE STANDARD ISO 2768-mk	DRAWN DATE 07/04/24	BREAK ALL SHARP EDGES	ALL DIMENSIONS IN MM UNLESS STATED OTHERWISE
UNSPECIFIED FINISHES Ra 1.6	SIGNOFF BY TT	MATERIAL N/A	MASS (g) 6784.00 / SCALE 1:4 / SHEET 1 OF 2 / A2
UNSPECIFIED THREADS BS 3643/2:1981 6H/6g	SIGNOFF DATE 07/04/24	DESCRIPTION RECOVERY BAY-NOSECONE ASSEMBLY	
		DRAWING # LA-0023	

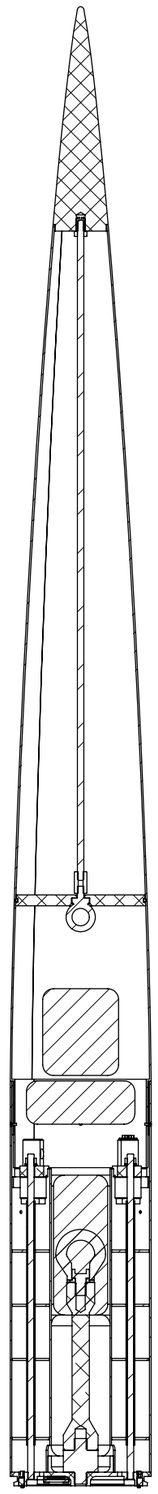

SECTION C-C

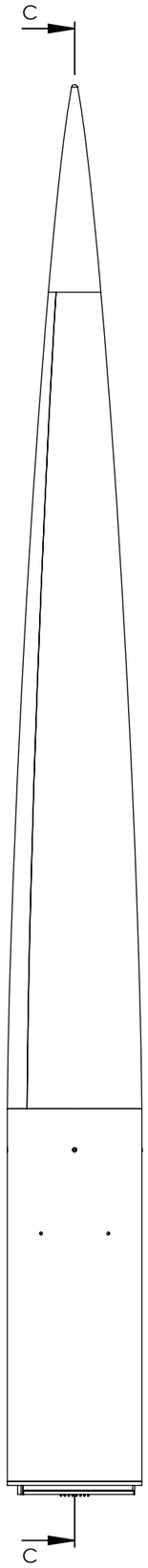

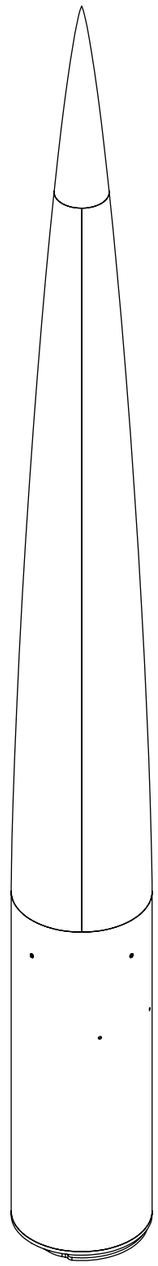

NOTES:

- LOW ALTITUDE CONFIGURATION SHOWN

DRAWING STANDARD BS 8888:2020	DRAWN BY TT	**UNCONTROLLED IF PRINTED**	LURA LEEDS UNIVERSITY ROCKETRY ASSOCIATION
TOLERANCE STANDARD ISO 2768-mk	DRAWN DATE 07/04/24	BREAK ALL SHARP EDGES	
UNSPECIFIED FINISHES Ra 1.6	SIGNOFF BY TT	MATERIAL N/A	ALL DIMENSIONS IN MM UNLESS STATED OTHERWISE
UNSPECIFIED THREADS BS 3643/2:1981 6H/6g	SIGNOFF DATE 07/04/24	DESCRIPTION RECOVERY BAY-NOSECONE ASSEMBLY	MASS (g) 6784.00 / SCALE 1:4 / SHEET 2 OF 2 / A2
		DRAWING # LA-0023	

ITEM NO.	PART #	DESCRIPTION	QTY.
1	LA-0022	AVIONICS BAY	1
2	LA-0023	RECOVERY BAY-NOSECONE ASSEMBLY	1
3	LA-0009	MANACLE RING	1

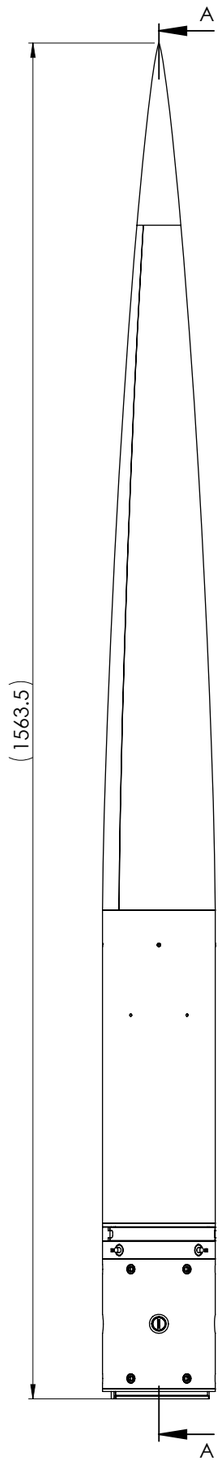

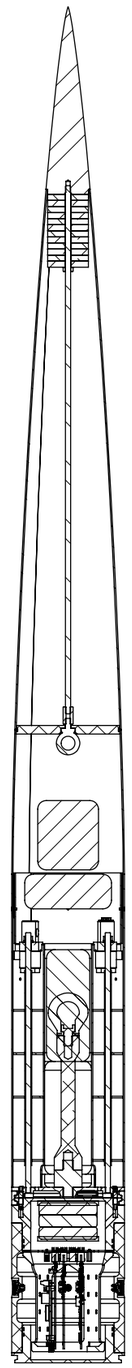

SECTION A-A

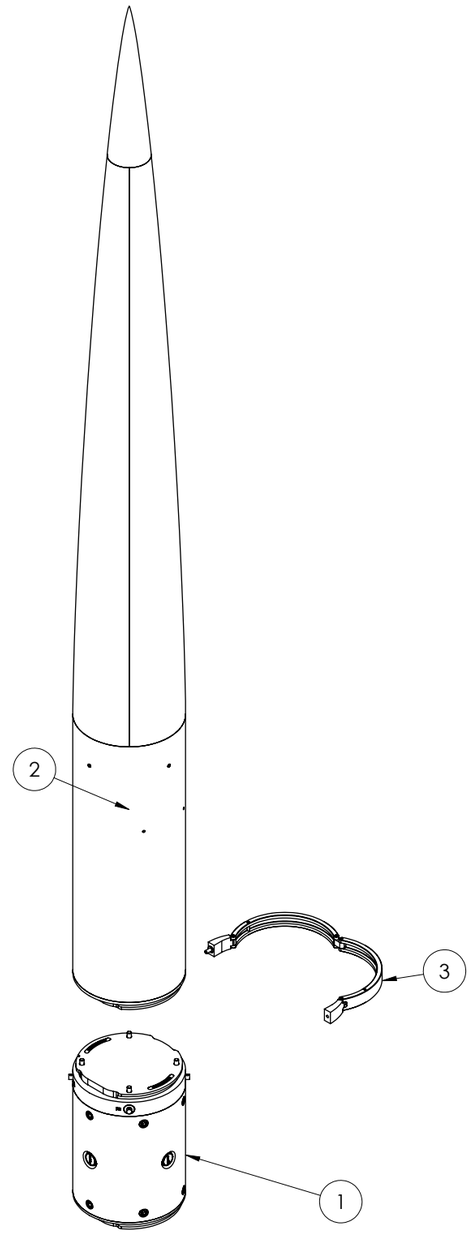

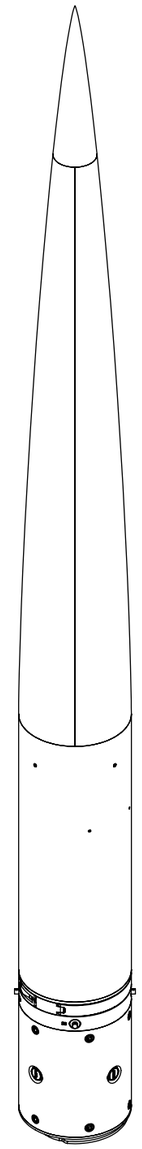

DRAWING STANDARD BS 8888:2020	DRAWN BY TT	UNCONTROLLED IF PRINTED	LURA LEEDS UNIVERSITY ROCKETRY ASSOCIATION
TOLERANCE STANDARD ISO 2768-mk	DRAWN DATE 12/04/23	BREAK ALL SHARP EDGES	ALL DIMENSIONS IN MM UNLESS STATED OTHERWISE
UNSPECIFIED FINISHES Ra 1.6	SIGNOFF BY TT	MATERIAL N/A	
UNSPECIFIED THREADS BS 3643/2:1981 6H/6g	SIGNOFF DATE 12/04/23	DESCRIPTION FORE ASSEMBLY	MASS (g) 9403.43 · SCALE 1:5 · SHEET 1 OF 1 · A2
		DRAWING # LA-0016	

ITEM NO.	PART #	DESCRIPTION	CONFIG.	QTY.	QTY.
1	LA-0015	AFT ASSEMBLY	LOW-ALTITUDE	-	1
2	LA-0016	FORE ASSEMBLY	SAFE	-	1
3	LA-0009	MANACLE RING	DEFAULT	1	1
4	LA-0015	AFT ASSEMBLY	HIGH-ALTITUDE	1	-
5	LA-0016	FORE ASSEMBLY	DEFAULT	1	-

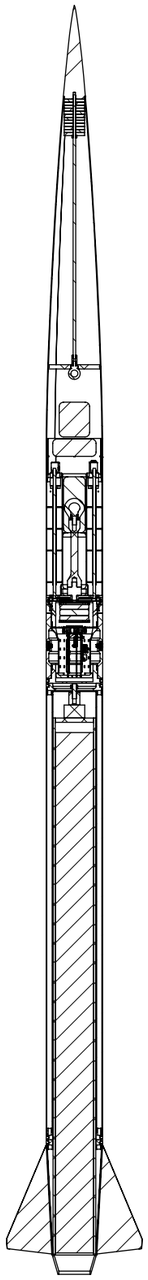

SECTION A-A

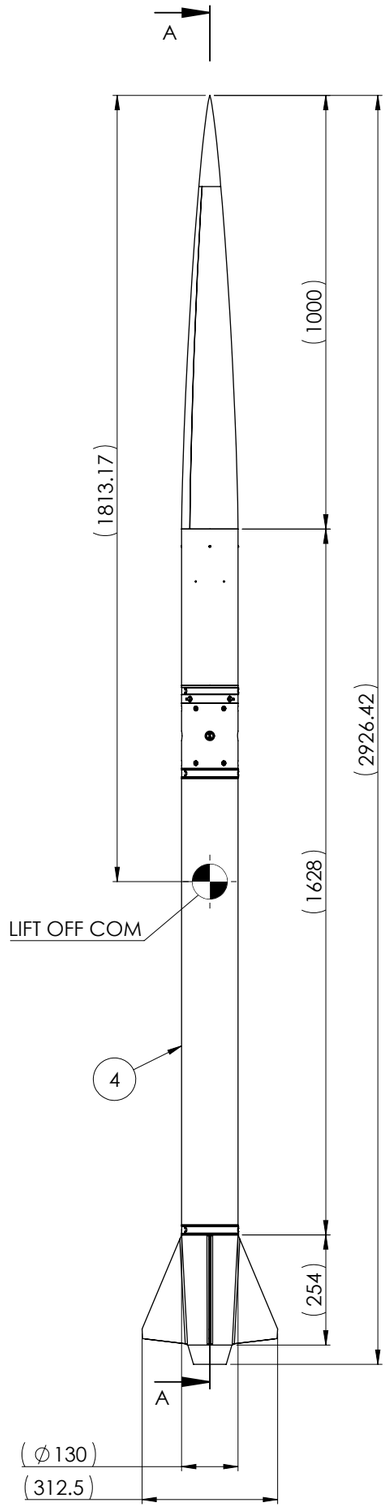

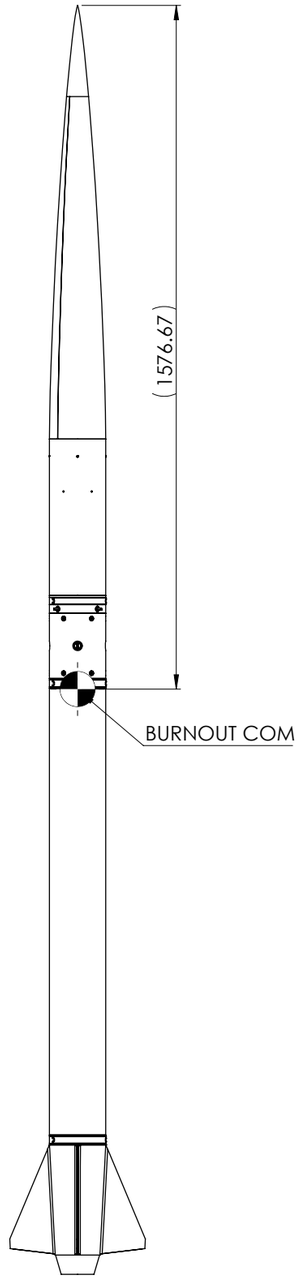

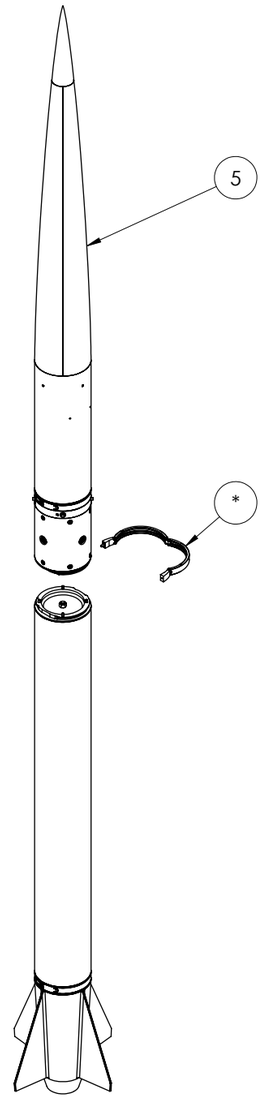

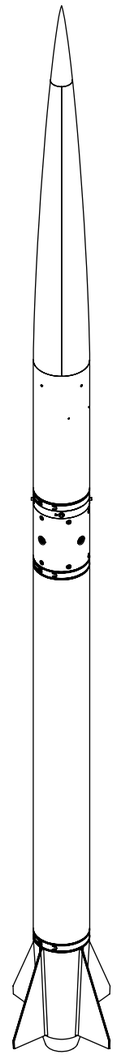

NOTES:
- HIGH ALTITUDE CONFIGURATION SHOWN

DRAWING STANDARD BS 8888:2020	DRAWN BY TT	UNCONTROLLED IF PRINTED	LURA LEEDS UNIVERSITY ROCKETRY ASSOCIATION
TOLERANCE STANDARD ISO 2768-mk	DRAWN DATE 12/04/24	BREAK ALL SHARP EDGES	
UNSPECIFIED FINISHES Ra 1.6	SIGNOFF BY TT	MATERIAL N/A	ALL DIMENSIONS IN MM UNLESS STATED OTHERWISE
UNSPECIFIED THREADS BS 3643/2:1981 6H/6g	SIGNOFF DATE 12/04/24	DESCRIPTION GRYPHON II	MASS (g) 27911.12 · SCALE 1:10 · SHEET 1 OF 2 · A2
		DRAWING # LA-0014	

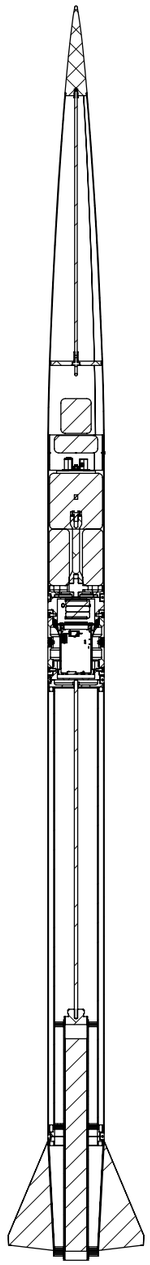

SECTION C-C

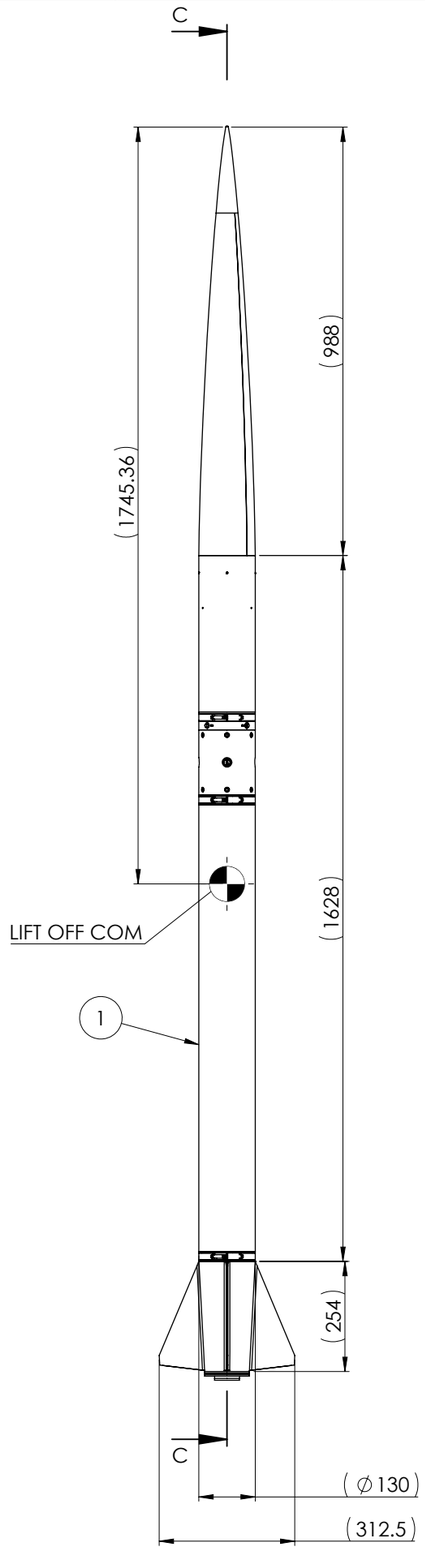

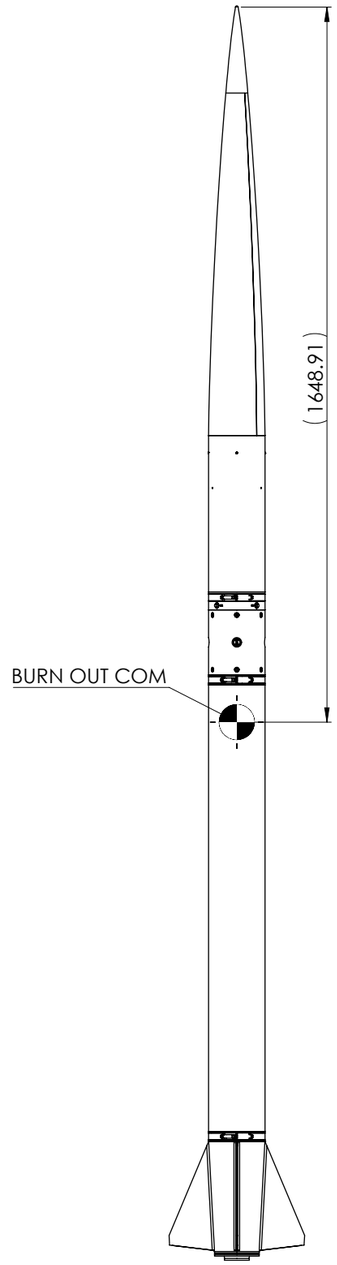

NOTES:

- LOW ALTITUDE CONFIGURATION SHOWN

DRAWING STANDARD BS 8888:2020	DRAWN BY TT	UNCONTROLLED IF PRINTED	LURA LEEDS UNIVERSITY ROCKETRY ASSOCIATION
TOLERANCE STANDARD ISO 2768-mk	DRAWN DATE 12/04/24	BREAK ALL SHARP EDGES	
UNSPECIFIED FINISHES Ra 1.6	SIGNOFF BY TT	MATERIAL N/A	ALL DIMENSIONS IN MM UNLESS STATED OTHERWISE
UNSPECIFIED THREADS BS 3643/2:1981 6H/6g	SIGNOFF DATE 12/04/24	DESCRIPTION GRYPHON II	MASS (g) 27911.12 · SCALE 1:10 · SHEET 2 OF 2 · A2
		DRAWING # LA-0014	