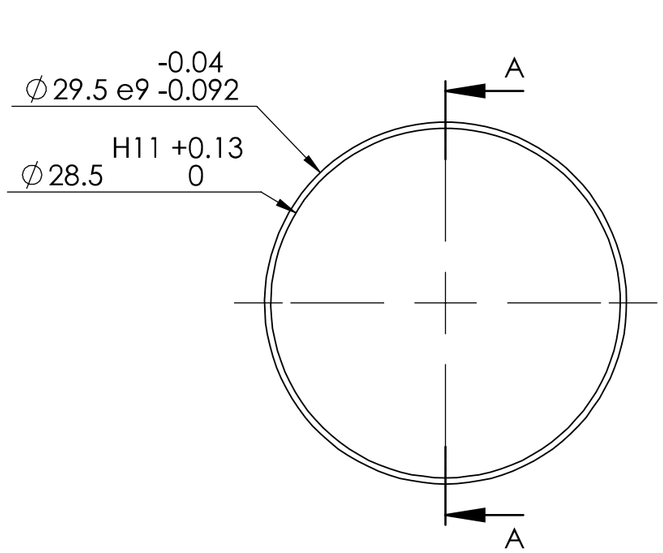

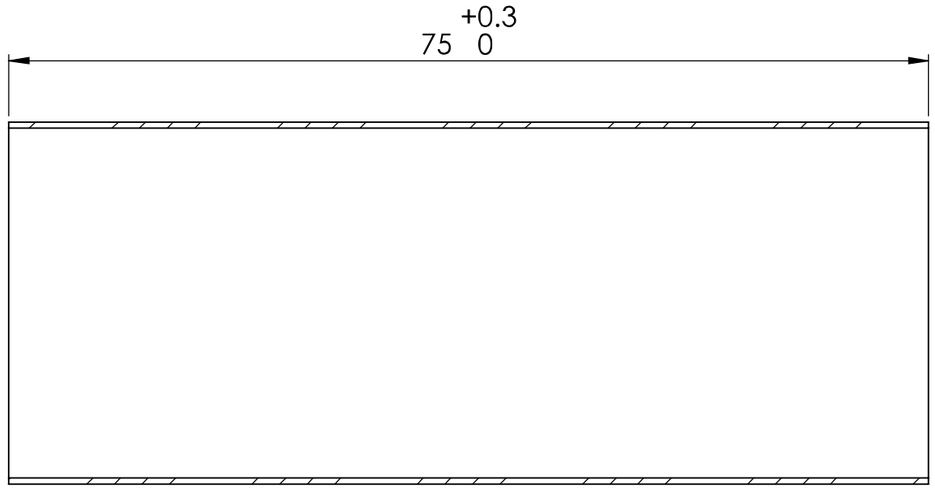

SECTION A-A

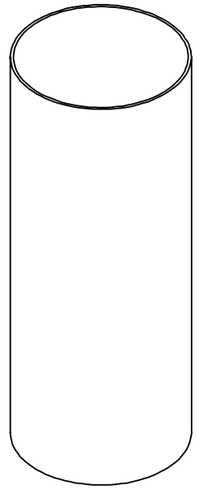

SCALE 1 : 1

DRAWING STANDARD BS 8888:2020	DRAWN BY TT	UNCONTROLLED IF PRINTED	LURA LEEDS UNIVERSITY ROCKETRY ASSOCIATION
TOLERANCE STANDARD ISO 2768-mk	DRAWN DATE 24/06/24	BREAK ALL SHARP EDGES	
UNSPECIFIED FINISHES Ra 1.6	SIGNOFF BY TT	MATERIAL POLYETHERETHERKETONE (PEEK)	ALL DIMENSIONS IN MM UNLESS STATED OTHERWISE
UNSPECIFIED THREADS BS 3643/2:1981 6H/6g	SIGNOFF DATE 25/06/24	DESCRIPTION STATOR CAN	MASS (g) 4.48 · SCALE 2:1 · SHEET 1 OF 1 · A3
		DRAWING # LP-0096	

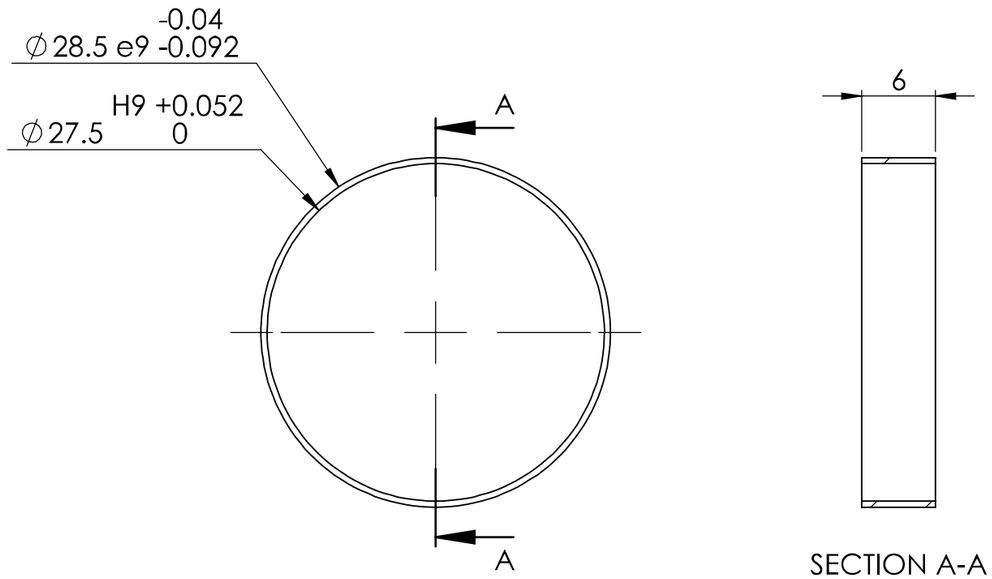

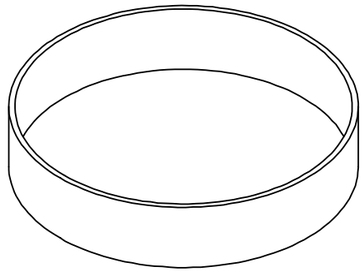

DRAWING STANDARD BS 8888:2020	DRAWN BY DB	**UNCONTROLLED IF PRINTED** BREAK ALL SHARP EDGES	LURA LEEDS UNIVERSITY ROCKETRY ASSOCIATION
TOLERANCE STANDARD ISO 2768-mk	DRAWN DATE 24/06/24	MATERIAL AISI TYPE 316L STAINLESS STEEL	ALL DIMENSIONS IN MM UNLESS STATED OTHERWISE
UNSPECIFIED FINISHES Ra 1.6	SIGNOFF BY TT	DESCRIPTION STATOR CAN BOTTOM RING	MASS (g) / SCALE 2:1 / SHEET 1 OF 1 / A3
UNSPECIFIED THREADS BS 3643/2:1981 6H/6g	SIGNOFF DATE 25/06/24	DRAWING # LP-0097	

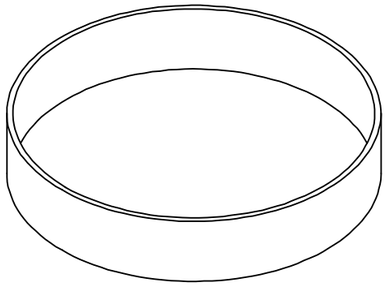

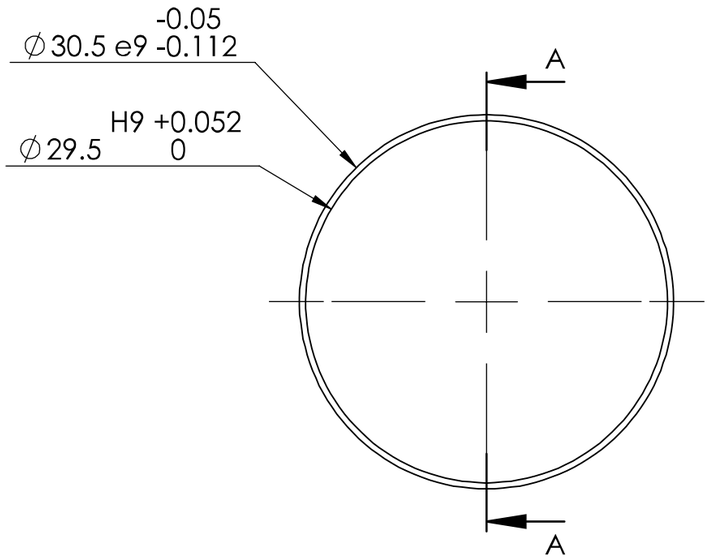

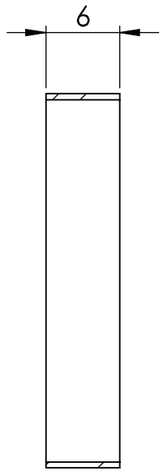

SECTION A-A

DRAWING STANDARD BS 8888:2020	DRAWN BY DB	**UNCONTROLLED IF PRINTED**	LURA LEEDS UNIVERSITY ROCKETRY ASSOCIATION
TOLERANCE STANDARD ISO 2768-mk	DRAWN DATE 24/06/24	BREAK ALL SHARP EDGES	
UNSPECIFIED FINISHES Ra 1.6	SIGNOFF BY TT	MATERIAL AISI TYPE 316L STAINLESS STEEL	ALL DIMENSIONS IN MM UNLESS STATED OTHERWISE
UNSPECIFIED THREADS BS 3643/2:1981 6H/6g	SIGNOFF DATE 25/06/24	DESCRIPTION STATOR CAN TOP RING	MASS (g) 2.27 · SCALE 2:1 · SHEET 1 OF 1 · A3
		DRAWING # LP-0098	

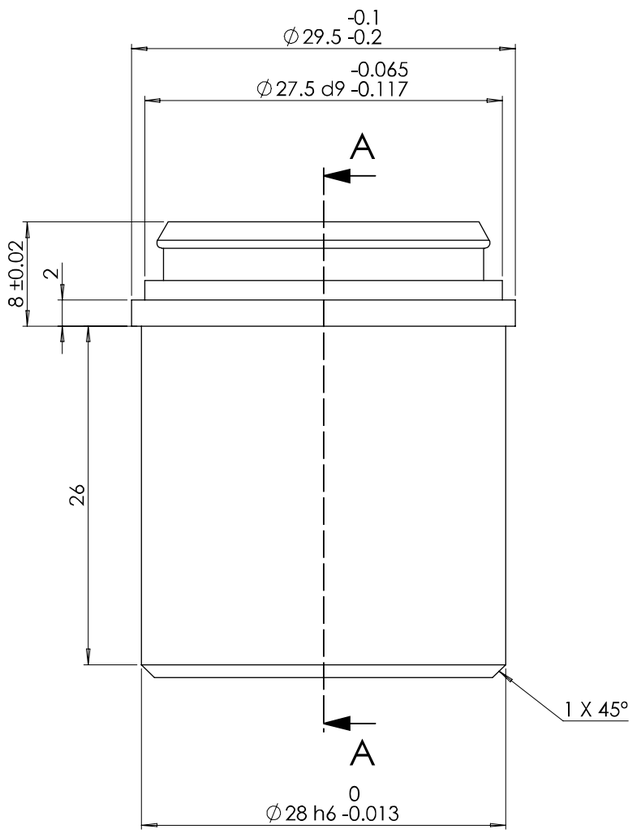

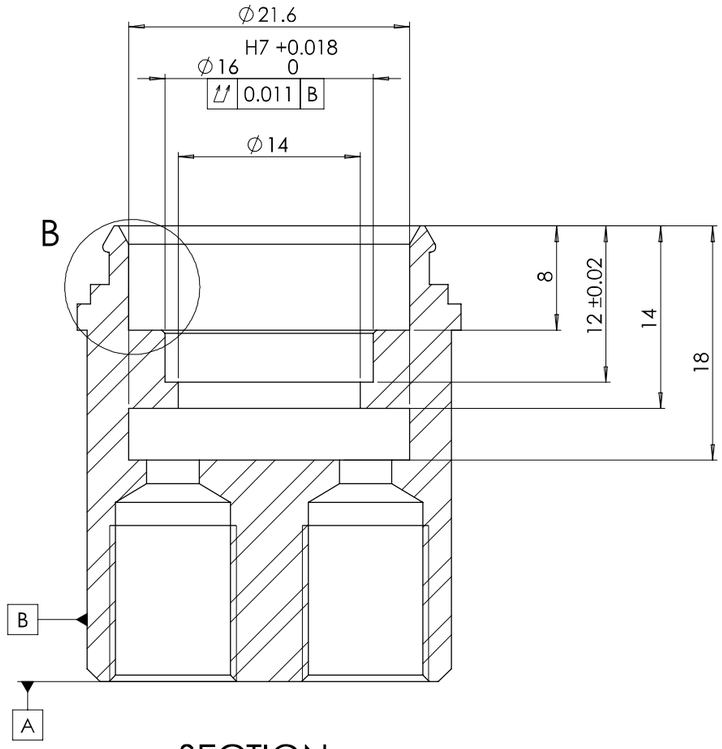

SECTION A-A

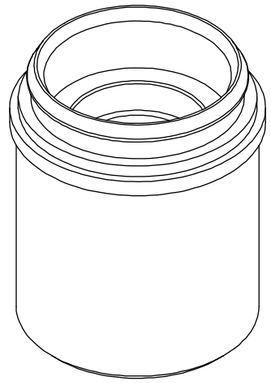

SCALE 2:1

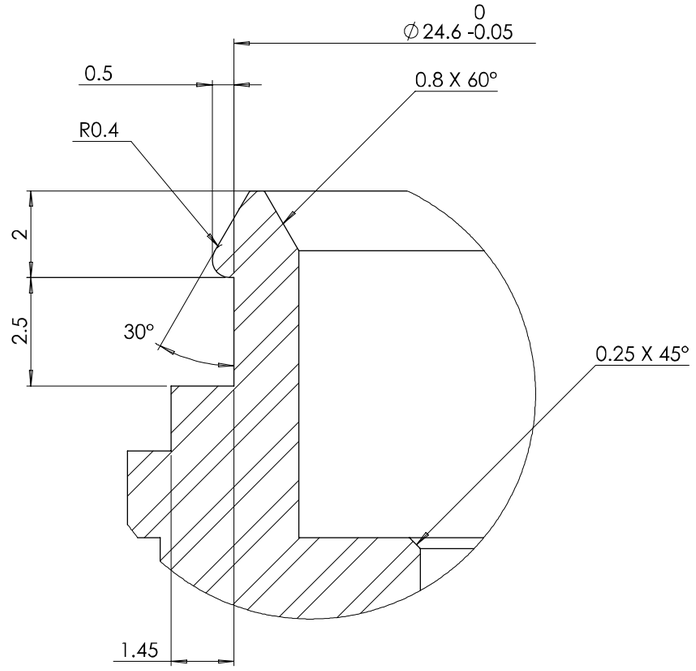

DETAIL B

SCALE 10 : 1

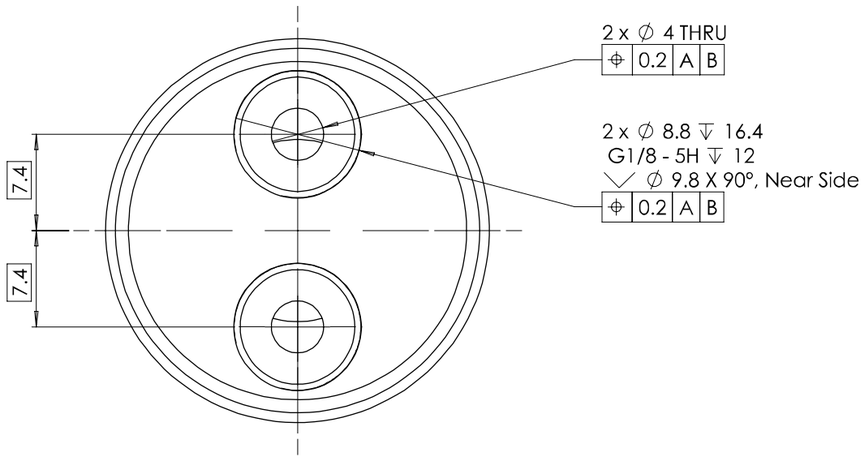

DRAWING STANDARD BS 8888:2020	DRAWN BY DB	UNCONTROLLED IF PRINTED	LURA LEEDS UNIVERSITY ROCKET RESEARCH ASSOCIATION
TOLERANCE STANDARD ISO 2768-mk	DRAWN DATE 24/06/24	BREAK ALL SHARP EDGES	
UNSPECIFIED FINISHES Ra 1.6	SIGNOFF BY TT	MATERIAL AISI TYPE 316L STAINLESS STEEL	ALL DIMENSIONS IN MM UNLESS STATED OTHERWISE
UNSPECIFIED THREADS BS 3643/2:1981 6H/6g	SIGNOFF DATE 25/06/24	DESCRIPTION RETURN CAP	MASS (g) 109.43 · SCALE 3:1 · SHEET 1 OF 1 · A2
		DRAWING # LP-0094	

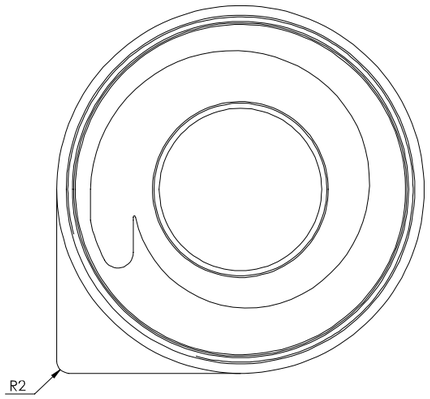

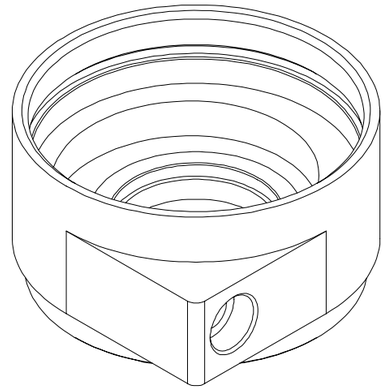

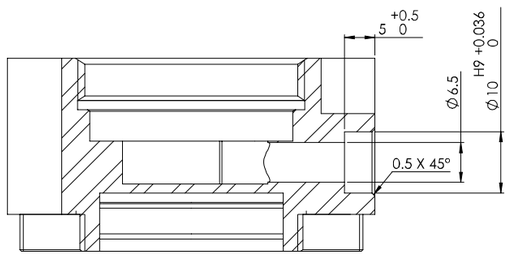

SECTION A-A

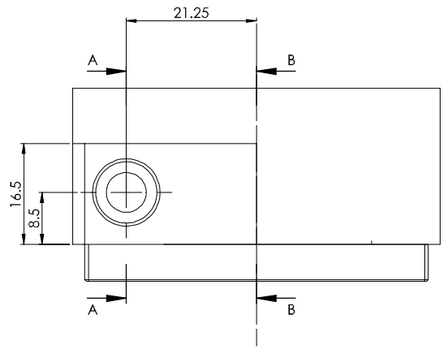

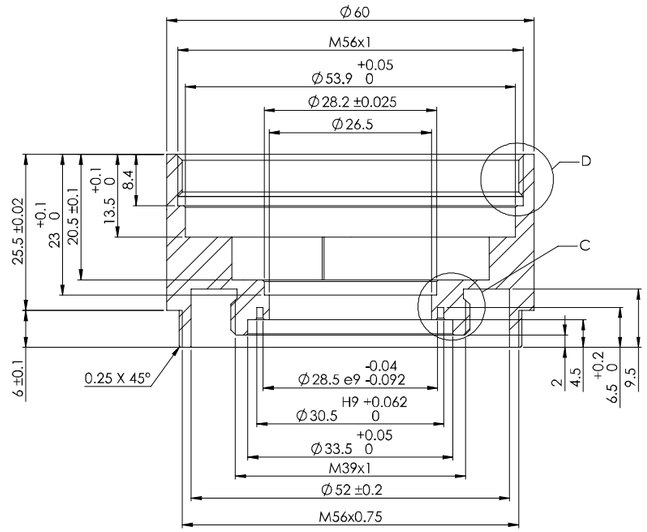

SECTION B-B

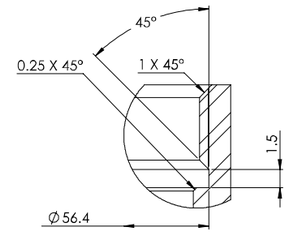

DETAIL D
SCALE 4 : 1

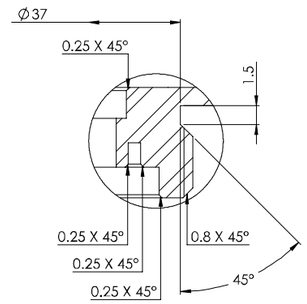

DETAIL C
SCALE 4 : 1

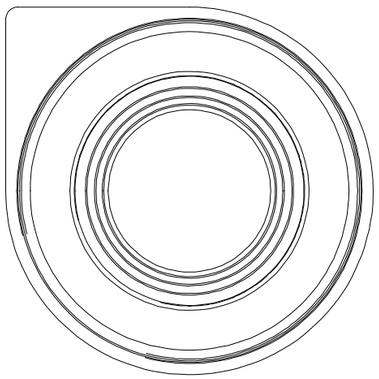

NOTES:

- UNSPECIFIED SURFACES TO MATCH SOLID MODEL WITHIN ⌓ 0.2

DRAWING STANDARD BS 8888:2020	DRAWN BY TT	UNCONTROLLED IF PRINTED	LURA LEEDS UNIVERSITY ROCKET RY ASSOCIATION
TOLERANCE STANDARD ISO 2768-mK	DRAWN DATE 24/06/24	BREAK ALL SHARP EDGES	
UNSPECIFIED FINISHES Ra 1.6	SIGNOFF BY TT	MATERIAL AISI TYPE 316L STAINLESS STEEL	ALL DIMENSIONS IN MM UNLESS STATED OTHERWISE
UNSPECIFIED THREADS BS 3643/2:1981 6H/6g	SIGNOFF DATE 25/04/24	DESCRIPTION VOLUTE CASING	MASS (g) 235.59 · SCALE 2:1 · SHEET 1 OF 1 · A1
		DRAWING # LP-0089	

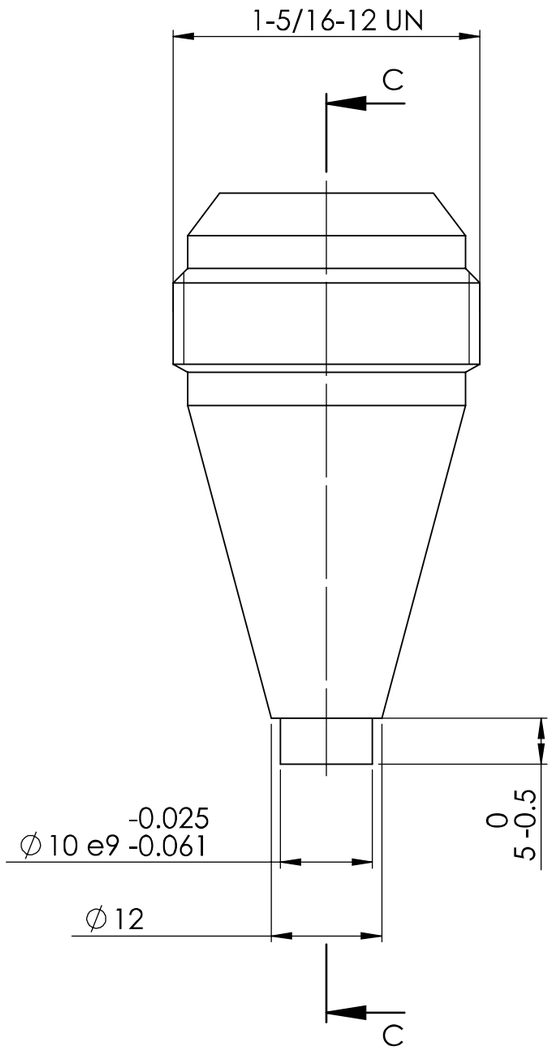

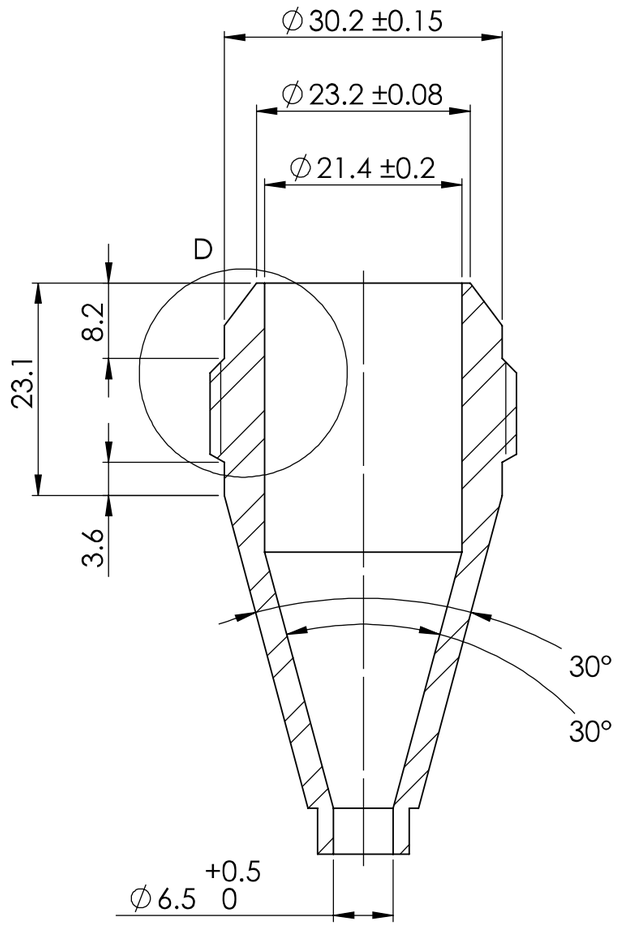

SECTION C-C

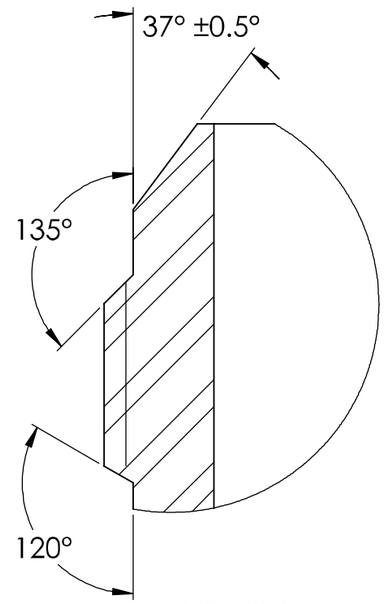

DETAIL D
SCALE 3 : 1

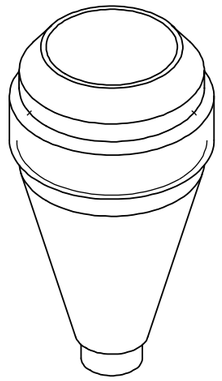

SCALE 1:1

DRAWING STANDARD BS 8888:2020	DRAWN BY DB	**UNCONTROLLED IF PRINTED**	LURA LEEDS UNIVERSITY ROCKETRY ASSOCIATION
TOLERANCE STANDARD ISO 2768-mk	DRAWN DATE 24/06/24	BREAK ALL SHARP EDGES	
UNSPECIFIED FINISHES Ra 1.6	SIGNOFF BY TT	MATERIAL AISI TYPE 316L STAINLESS STEEL	ALL DIMENSIONS IN MM UNLESS STATED OTHERWISE
UNSPECIFIED THREADS BS 3643/2:1981 6H/6g	SIGNOFF DATE 25/06/24	DESCRIPTION VOLUTE DIFFUSER	MASS (g) 120.96 · SCALE 3:2 · SHEET 1 OF 1 · A3
		DRAWING # LP-0090	

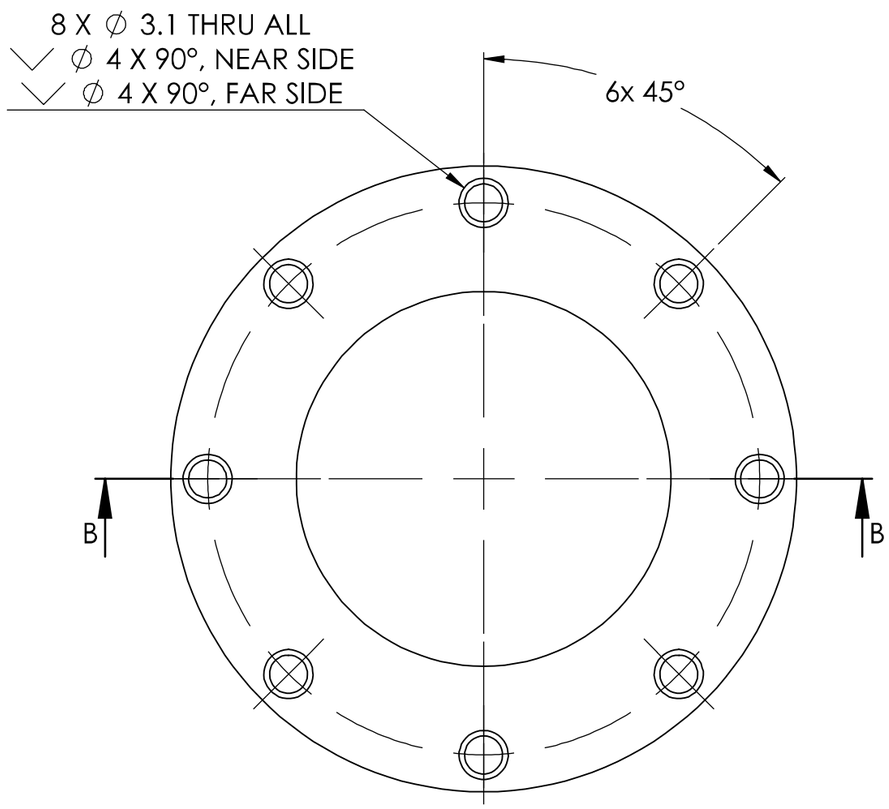

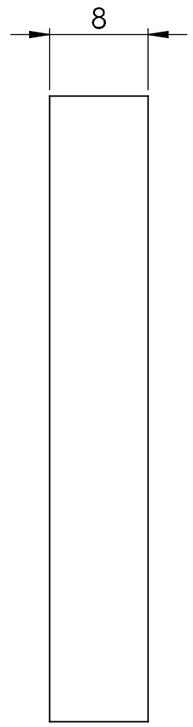

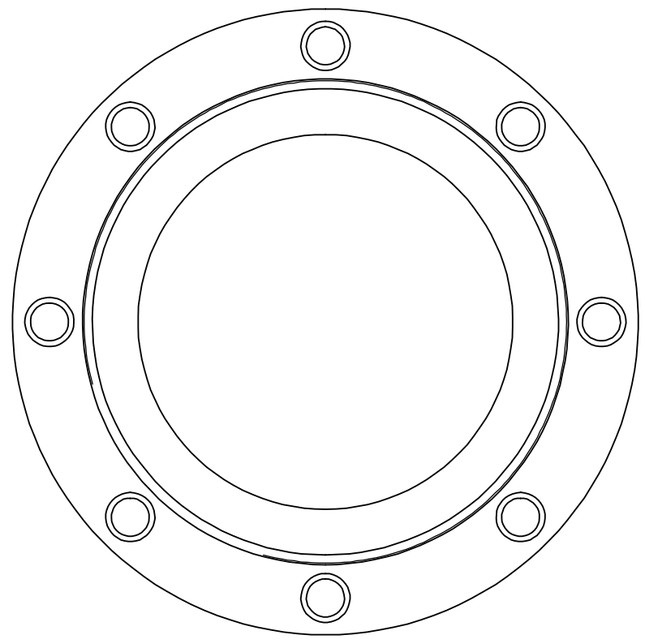

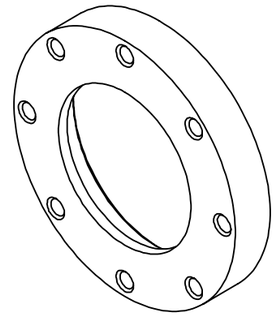

SCALE 1 : 1

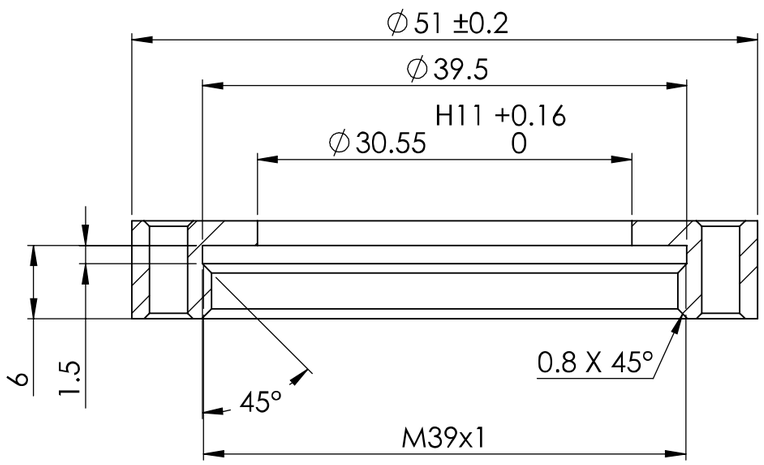

SECTION B-B

DRAWING STANDARD BS 8888:2020	DRAWN BY DB	**UNCONTROLLED IF PRINTED**	LURA LEEDS UNIVERSITY ROCKETRY ASSOCIATION
TOLERANCE STANDARD ISO 2768-mk	DRAWN DATE 24/06/24	BREAK ALL SHARP EDGES	ALL DIMENSIONS IN MM UNLESS STATED OTHERWISE
UNSPECIFIED FINISHES Ra 1.6	SIGNOFF BY TT	MATERIAL AISI TYPE 316L STAINLESS STEEL	MASS (g) 59.09 / SCALE 2:1 / SHEET 1 OF 1 / A3
UNSPECIFIED THREADS BS 3643/2:1981 6H/6g	SIGNOFF DATE 25/06/24	DESCRIPTION VOLUTE SPLIT GROOVE RING / DRAWING # LP-0093	

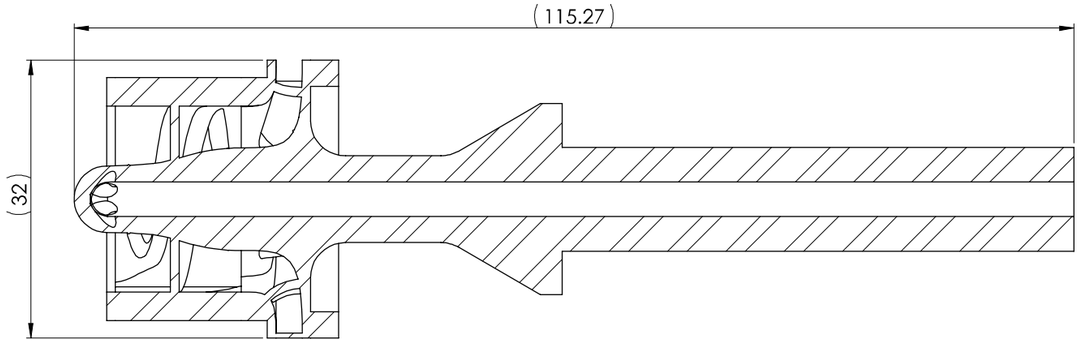

SECTION A-A

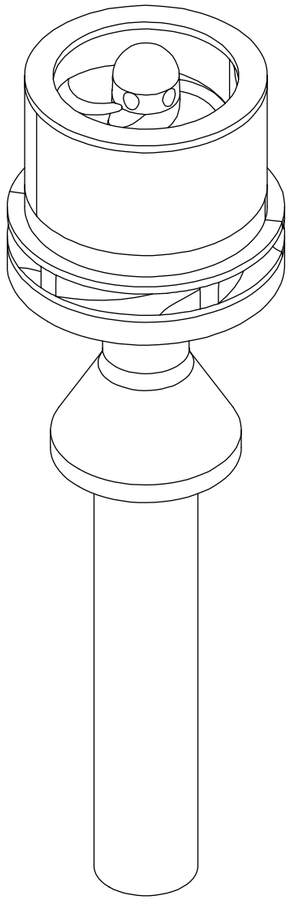

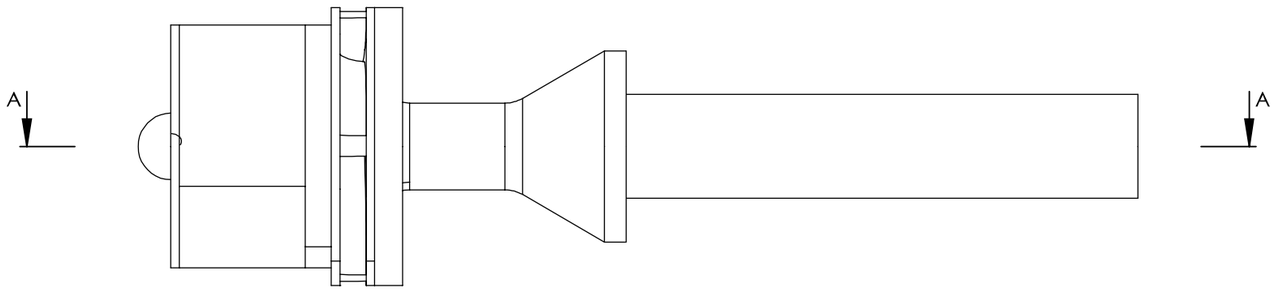

NOTES:
- AS PRINTED CONFIGUARTION SHOWN.
- REFER TO SOLID MODEL FOR UNSPECIFIED GEOMETRY.

DRAWING STANDARD BS 8888:2020	DRAWN BY DB	**UNCONTROLLED IF PRINTED**	LURA LEEDS UNIVERSITY ROCKETRY ASSOCIATION
TOLERANCE STANDARD ISO 2768-mk	DRAWN DATE 24/06/24	BREAK ALL SHARP EDGES	
UNSPECIFIED FINISHES Ra 1.6	SIGNOFF BY TT	MATERIAL AISI TYPE 316L STAINLESS STEEL	ALL DIMENSIONS IN MM UNLESS STATED OTHERWISE
UNSPECIFIED THREADS BS 3643/2:1981 6H/6g	SIGNOFF DATE 25/06/24	DESCRIPTION SHAFT	MASS (g) 157.86 · SCALE 2:1 · SHEET 1 OF 2 · A2
		DRAWING # LP-0099	

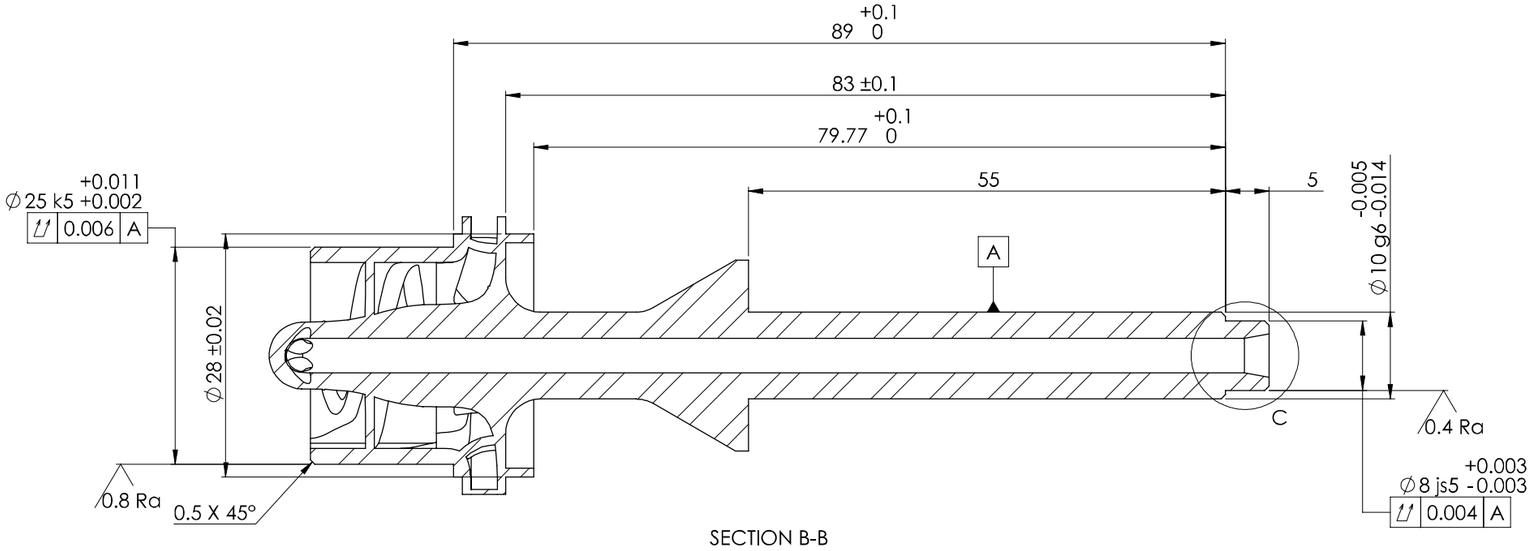

SECTION B-B

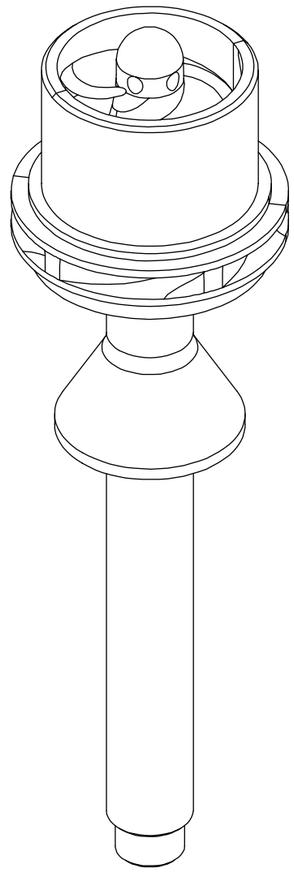

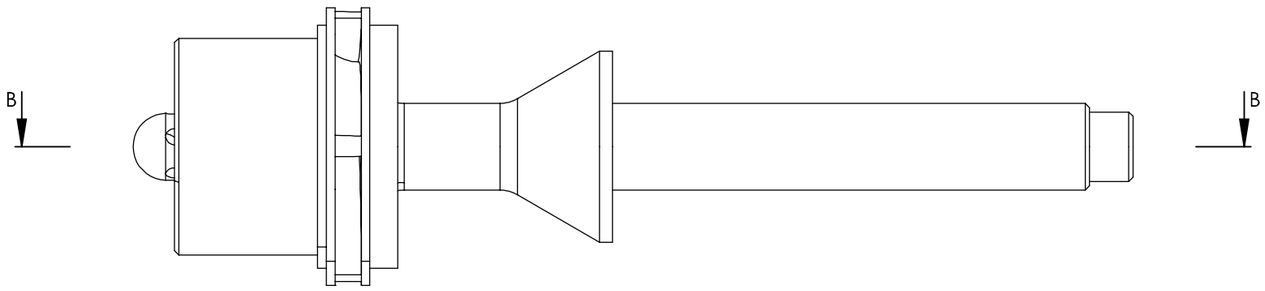

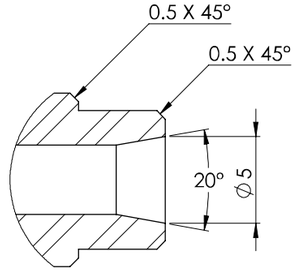

DETAIL C
SCALE 4 : 1

NOTES:

- FINAL CONFIGUARTION SHOWN.
- BEAD BLAST VISIBLE SURFACES WITH #120 GRIT FOR UNIFORM MATTE TEXTURE PRIOR TO MACHINING.
- UNSPECIFIED SURFACES TO MATCH SOLID MODEL WITHIN 0.4

DRAWING STANDARD BS 8888:2020	DRAWN BY DB	**UNCONTROLLED IF PRINTED**	LURA LEEDS UNIVERSITY ROCKETRY ASSOCIATION
TOLERANCE STANDARD ISO 2768-mk	DRAWN DATE 24/06/24	BREAK ALL SHARP EDGES	
UNSPECIFIED FINISHES Ra 1.6	SIGNOFF BY TT	MATERIAL AISI TYPE 316L STAINLESS STEEL	ALL DIMENSIONS IN MM UNLESS STATED OTHERWISE
UNSPECIFIED THREADS BS 3643/2:1981 6H/6g	SIGNOFF DATE 25/06/24	DESCRIPTION SHAFT	MASS (g) 157.86 · SCALE 2:1 · SHEET 2 OF 2 · A2
		DRAWING # LP-0099	

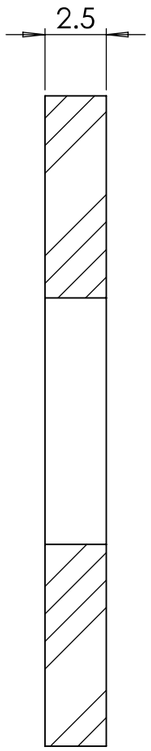

SECTION A-A

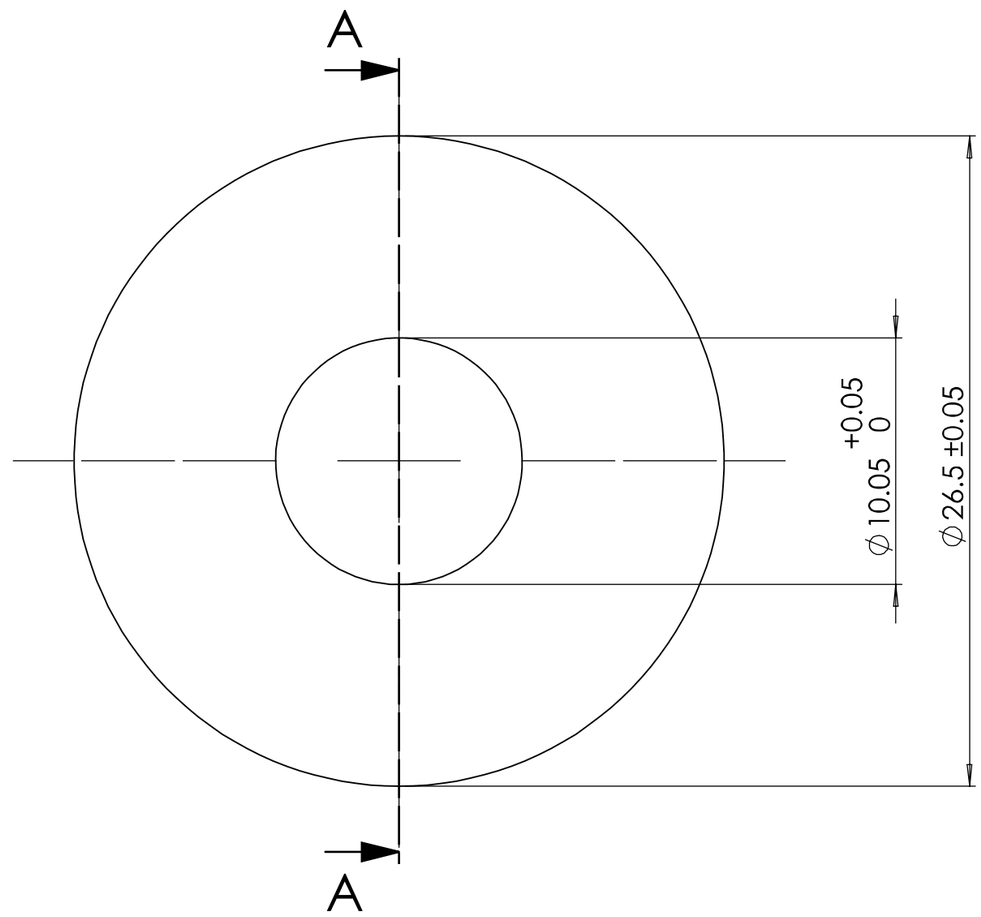

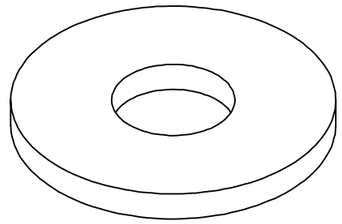

SCALE 2:1

NOTES:

- DIAMETRICALLY MAGNETIZED. PROVIDE MEANS OF IDENTIFICATION.
- NI-CU-NI COATING.

DRAWING STANDARD BS 8888:2020	DRAWN BY DB	**UNCONTROLLED IF PRINTED**	LURA LEEDS UNIVERSITY ROCKETRY ASSOCIATION
TOLERANCE STANDARD ISO 2768-mk	DRAWN DATE 23/06/24	BREAK ALL SHARP EDGES	ALL DIMENSIONS IN MM UNLESS STATED OTHERWISE
UNSPECIFIED FINISHES Ra 1.6	SIGNOFF BY TT	MATERIAL NEFEB	MASS (g) 8.85 / SCALE 4:1 / SHEET 1 OF 1 / A3
UNSPECIFIED THREADS BS 3643/2:1981 6H/6g	SIGNOFF DATE 25/06/24	DESCRIPTION ROTOR MAGNET	
		DRAWING # LP-0101	

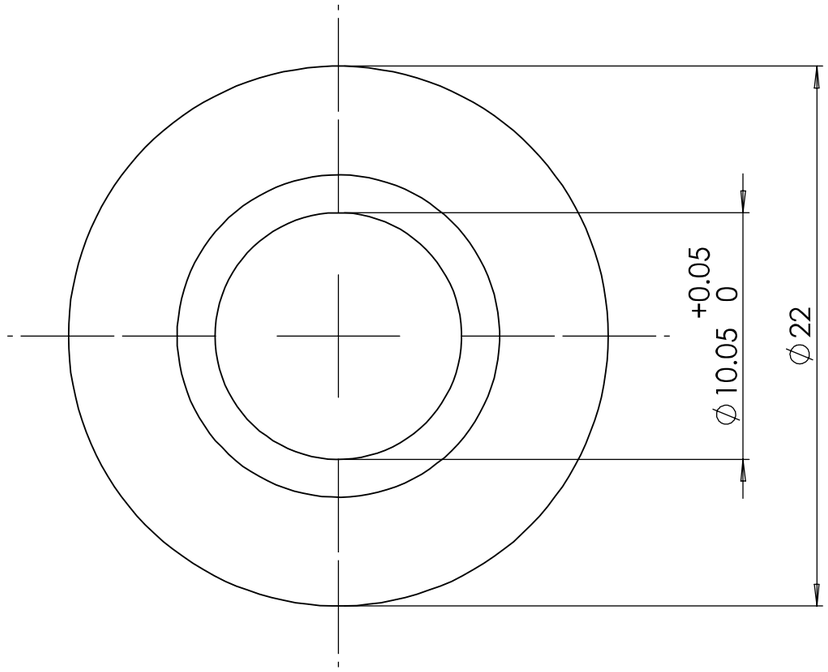

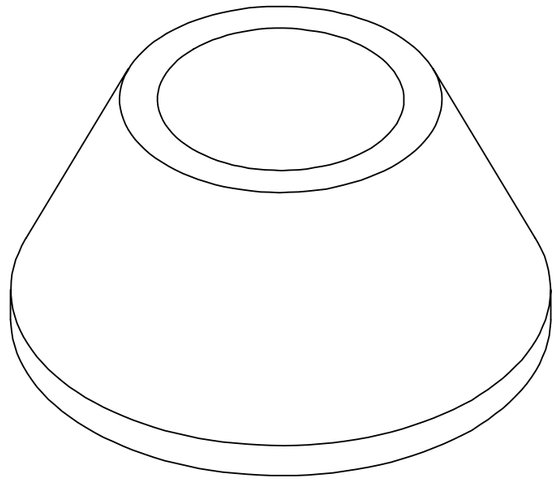

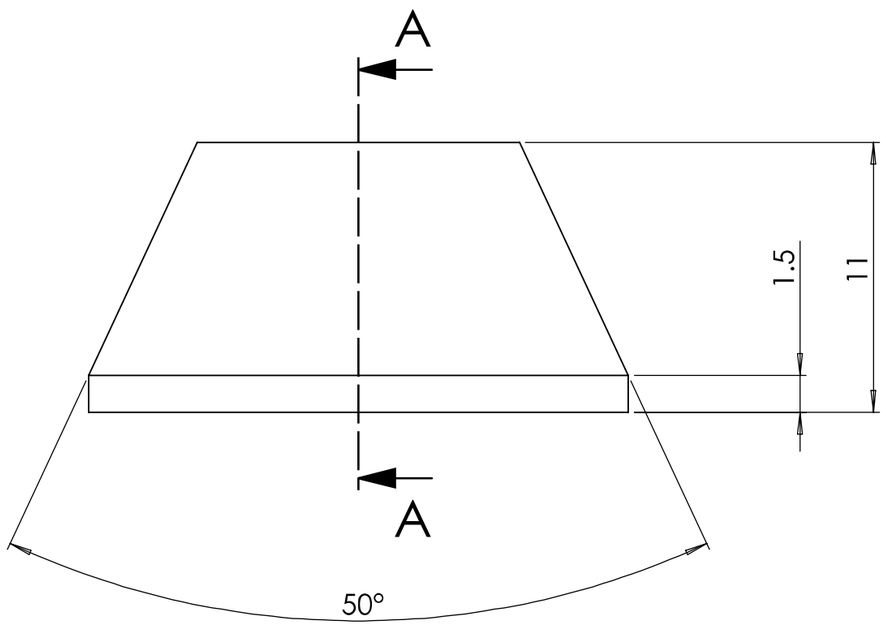

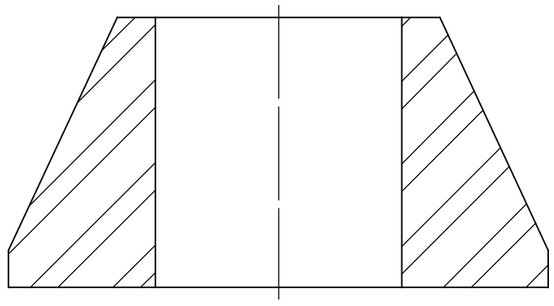

SECTION A-A

DRAWING STANDARD BS 8888:2020	DRAWN BY DB	UNCONTROLLED IF PRINTED	LURA LEEDS UNIVERSITY ROCKETRY ASSOCIATION
TOLERANCE STANDARD ISO 2768-mk	DRAWN DATE 23/06/24	BREAK ALL SHARP EDGES	
UNSPECIFIED FINISHES Ra 1.6	SIGNOFF BY TT	MATERIAL AISI TYPE 316L STAINLESS STEEL	ALL DIMENSIONS IN MM UNLESS STATED OTHERWISE
UNSPECIFIED THREADS BS 3643/2:1981 6H/6g	SIGNOFF DATE 25/06/24	DESCRIPTION MAGNET STACK CAP	MASS (g) 16.45 / SCALE 4:1 / SHEET 1 OF 1 / A3
		DRAWING # LP-0100	

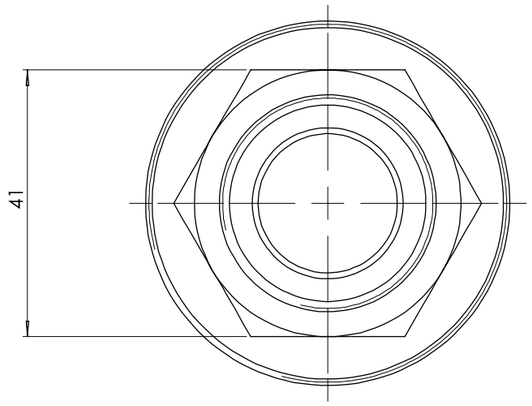

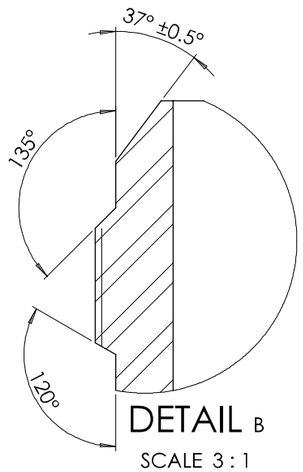

DETAIL B
SCALE 3 : 1

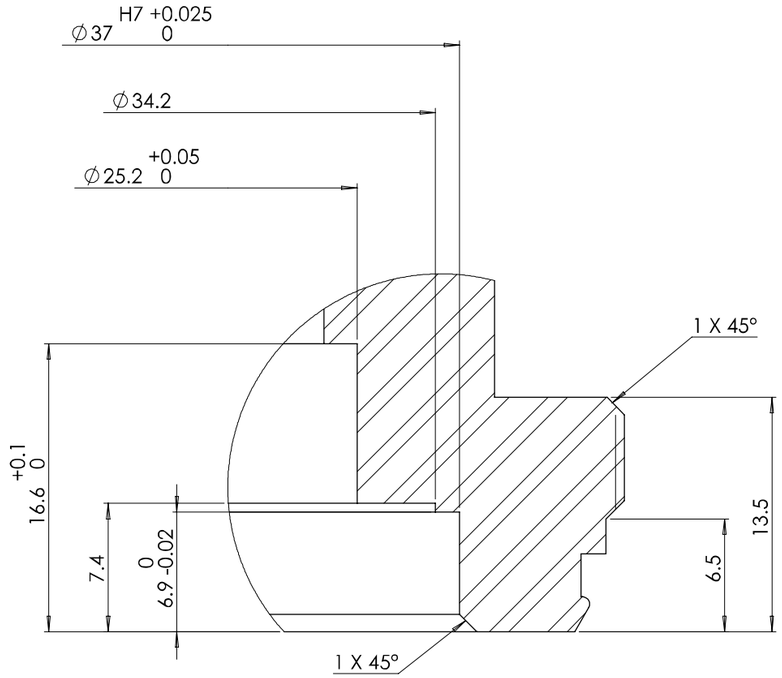

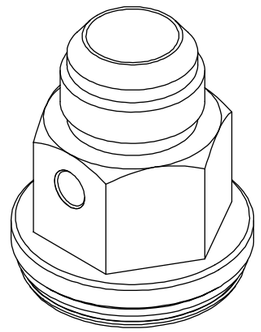

SCALE 1:1

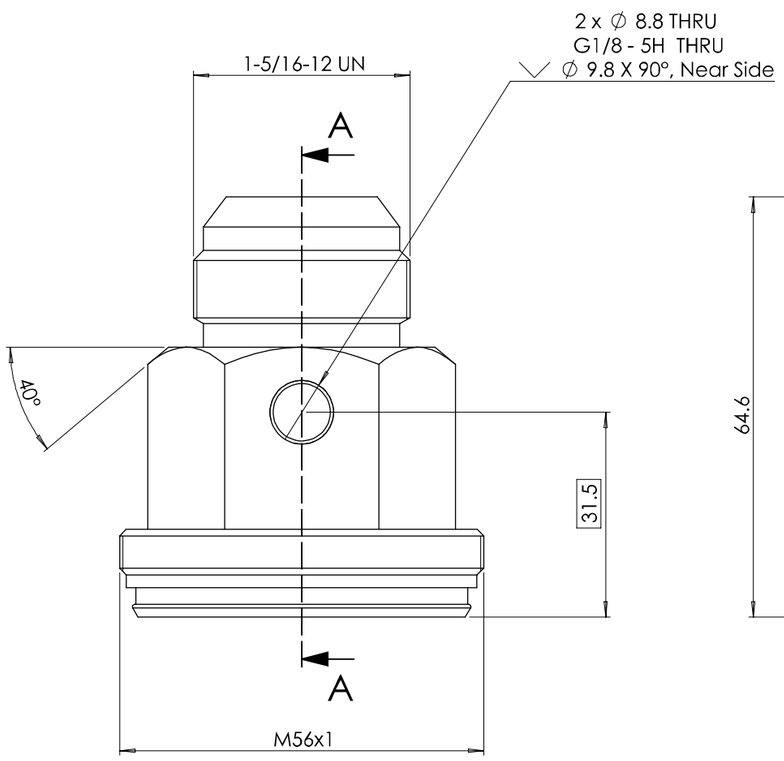

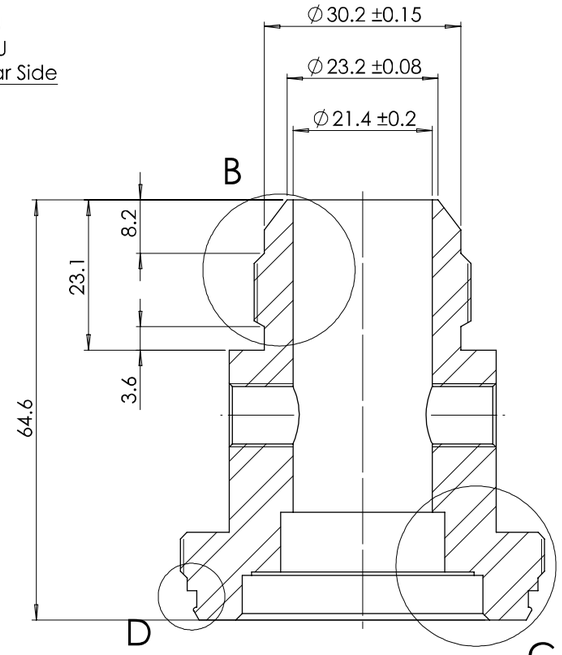

SECTION A-A

DETAIL C
SCALE 4 : 1

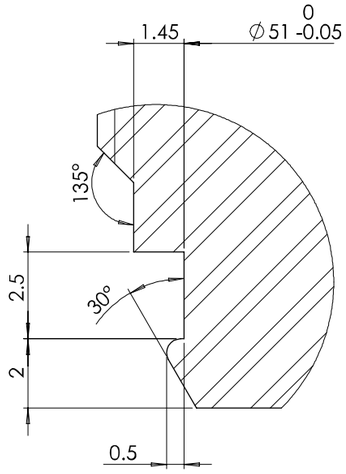

DETAIL D
SCALE 8 : 1

DRAWING STANDARD BS 8888:2020	DRAWN BY DB	UNCONTROLLED IF PRINTED	LURA LEEDS UNIVERSITY ROCKET RY ASSOCIATION
TOLERANCE STANDARD ISO 2768-mk	DRAWN DATE 24/06/24	BREAK ALL SHARP EDGES	ALL DIMENSIONS IN MM UNLESS STATED OTHERWISE
UNSPECIFIED FINISHES Ra 1.6	SIGNOFF BY TT	MATERIAL AISI TYPE 316L STAINLESS STEEL	MASS (g) 464.84
UNSPECIFIED THREADS BS 3643/2:1981 6H/6g	SIGNOFF DATE 25/06/24	DESCRIPTION INLET CAP	SCALE 3:2
		DRAWING # LP-0102	SHEET 1 OF 1
			A2

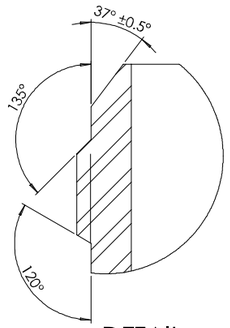

DETAIL B

SCALE 3 : 1

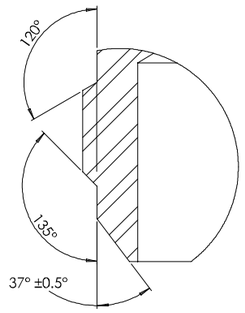

DETAIL D

SCALE 3 : 1

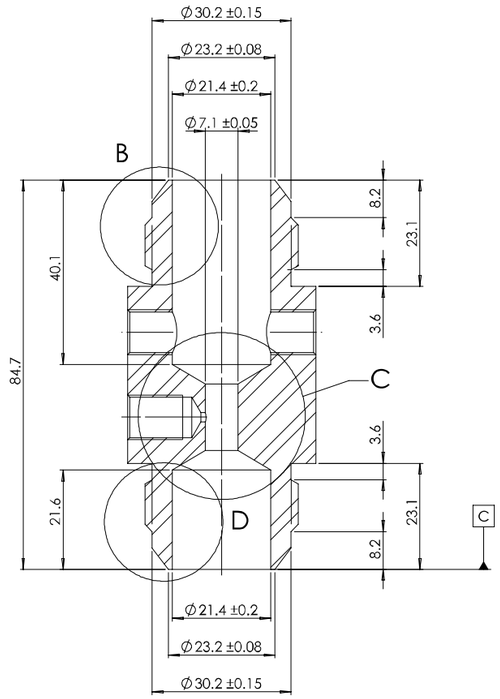

SECTION A-A

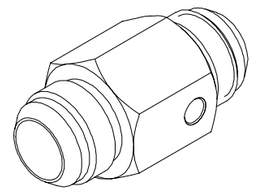

SCALE 1:1

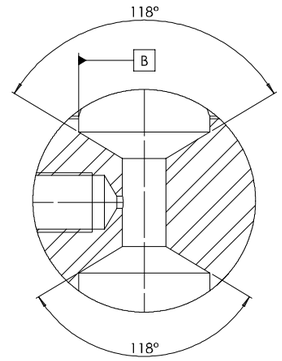

DETAIL C

SCALE 2 : 1

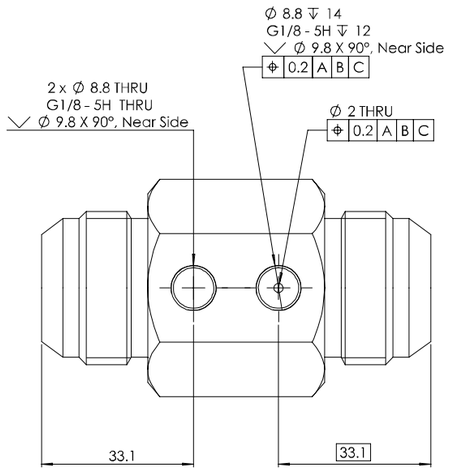

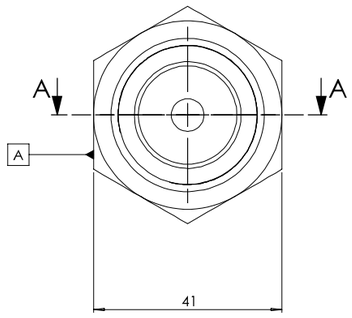

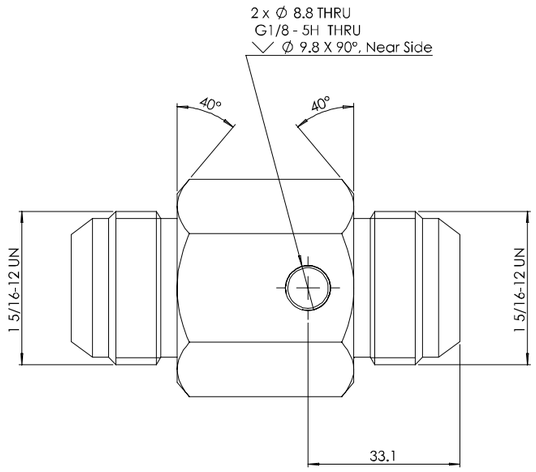

DRAWING STANDARD BS 8888:2020	DRAWN BY DB	UNCONTROLLED IF PRINTED	LURA LEEDS UNIVERSITY ROCKET RESEARCH ASSOCIATION
TOLERANCE STANDARD ISO 2768-mK	DRAWN DATE 25/06/24	BREAK ALL SHARP EDGES	
UNSPECIFIED FINISHES Ra 1.6	SIGNOFF BY TT	MATERIAL AISI TYPE 316L STAINLESS STEEL	ALL DIMENSIONS IN MM UNLESS STATED OTHERWISE
UNSPECIFIED THREADS BS 3643/2:1981 6H/6g	SIGNOFF DATE 25/06/24	DESCRIPTION VENTURI ADAPTER	MASS (g) 515.81 · SCALE 3:2 · SHEET 1 OF 1 · A1
		DRAWING # LP-0103	

ITEM NO.	PART NUMBER	DESCRIPTION	QTY.
1	HAM-LET-766LR_6X1SLASH4	FEMALE CONNECTOR, 6mm OD X 1/4 BSPTF	1
2	HAM-LET-768LR_6X1SLASH8	MALE CONNECTOR, 6mm OD X 1/8 BSPTM, SS	1
3	IFM-PT5443	PRESSURE TRANSMITTER, 0-40 BAR, G1/4, 4-20MA, M12	1
4	LP-0095	PIG TAIL	1
5	EASTERN_SEALS-BS014PTFE	PTFE O-RING	1
6	BRITLUBE-BL-15502	LOX COMPATABLE GREASE	1

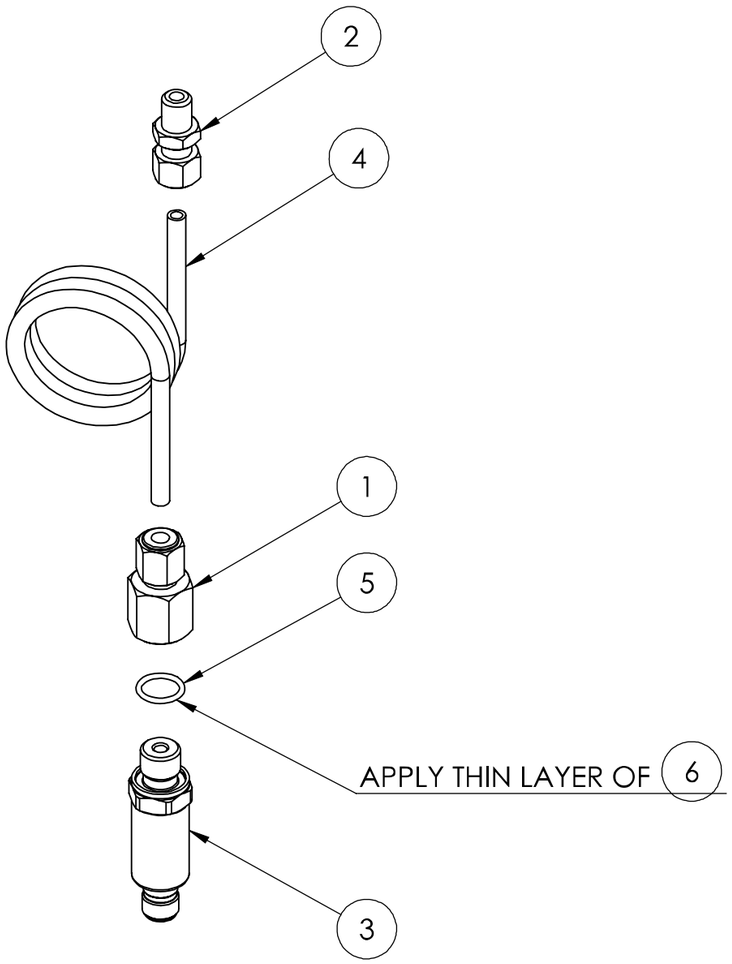

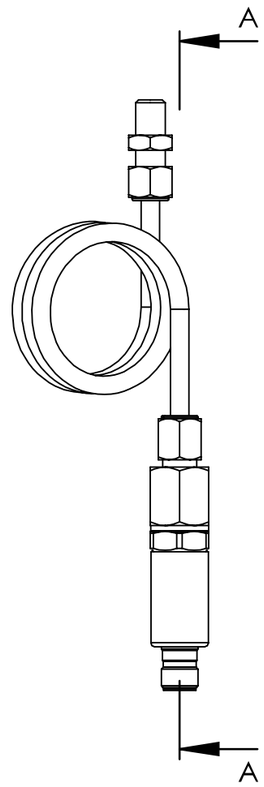

SECTION A-A

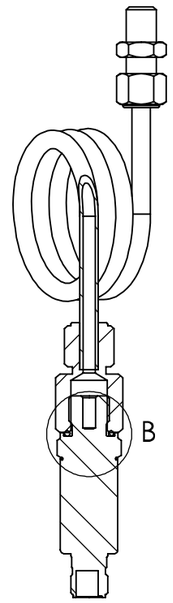

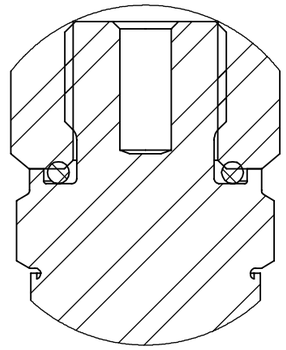

DETAIL B
SCALE 2 : 1

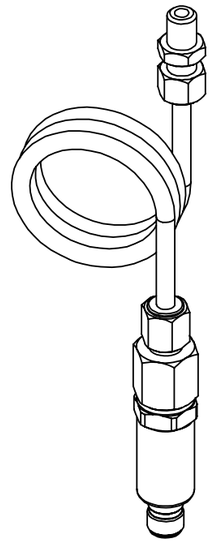

DRAWING STANDARD BS 8888:2020	DRAWN BY DB	UNCONTROLLED IF PRINTED	LURA LEEDS UNIVERSITY ROCKETRY ASSOCIATION
TOLERANCE STANDARD ISO 2768-mk	DRAWN DATE 28/06/24	BREAK ALL SHARP EDGES	
UNSPECIFIED FINISHES Ra 1.6	SIGNOFF BY TT	MATERIAL N/A	ALL DIMENSIONS IN MM UNLESS STATED OTHERWISE
UNSPECIFIED THREADS BS 3643/2:1981 6H/6g	SIGNOFF DATE 28/06/24	DESCRIPTION PRESSURE SENSOR ASSEMBLY	MASS (g) 252.19 / SCALE 1:2 / SHEET 1 OF 1 / A3
		DRAWING # LA-0062	

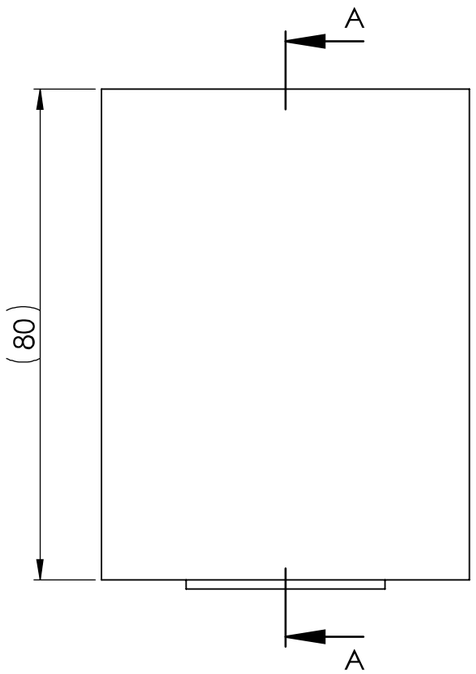

SECTION A-A

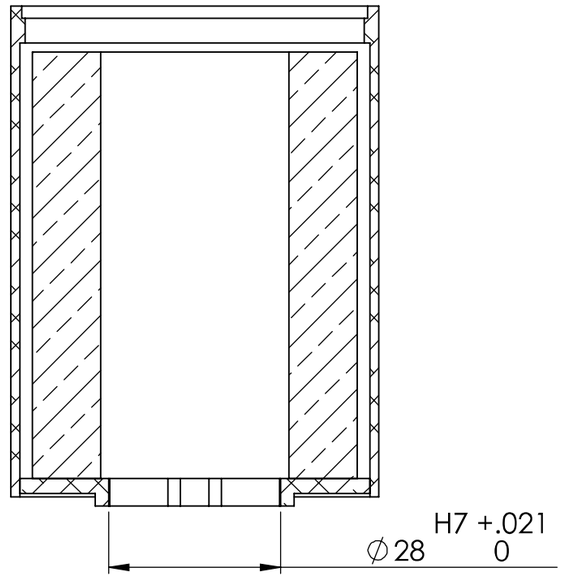

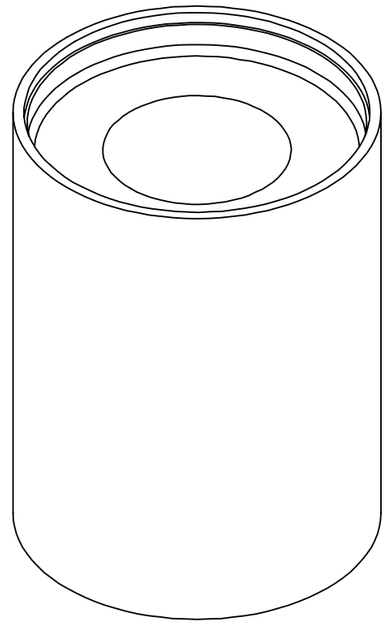

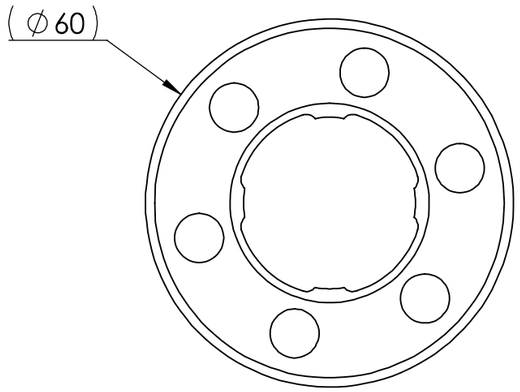

NOTES:

- MODIFIED COTS ITEM SHOWN.

DRAWING STANDARD BS 8888:2020	DRAWN BY TT	**UNCONTROLLED IF PRINTED**	LURA LEEDS UNIVERSITY ROCKETRY ASSOCIATION
TOLERANCE STANDARD ISO 2768-mk	DRAWN DATE 20/06/24	BREAK ALL SHARP EDGES	
UNSPECIFIED FINISHES Ra 1.6	SIGNOFF BY TT	MATERIAL N/A	ALL DIMENSIONS IN MM UNLESS STATED OTHERWISE
UNSPECIFIED THREADS BS 3643/2:1981 6H/6g	SIGNOFF DATE 27/06/24	DESCRIPTION MODIFIED LMT3040 STATOR	MASS (g) 979.59 · SCALE 1:1 · SHEET 1 OF 1 · A3
		DRAWING # LA-0064	

ITEM NO.	PART NUMBER	DESCRIPTION	QTY.
1	LP-0096	STATOR CAN	1
2	LP-0097	STATOR CAN BOTTOM RING	1
3	LP-0098	STATOR CAN TOP RING	1
4	LOCTITE-STYCAST_2850FT		1

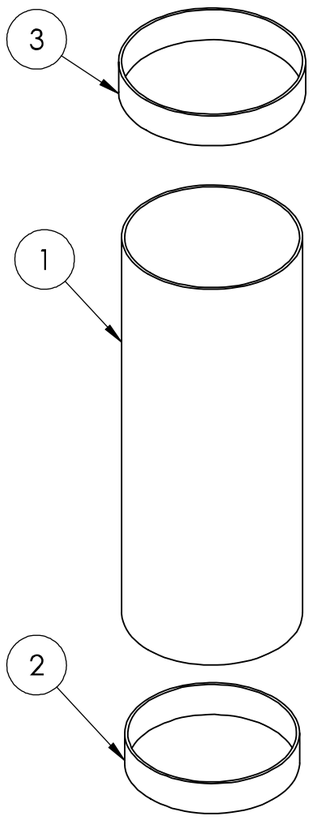

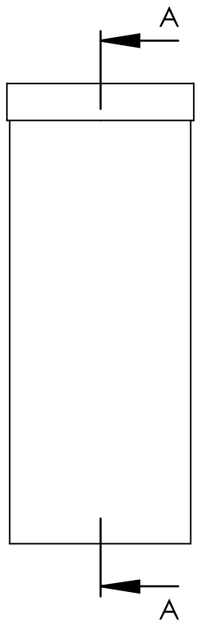

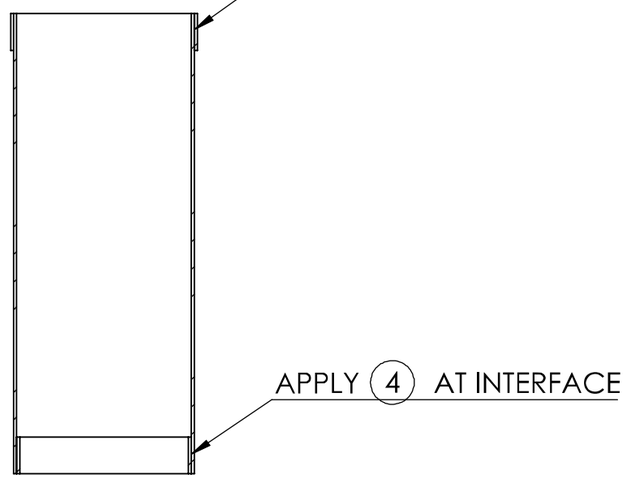

SECTION A-A

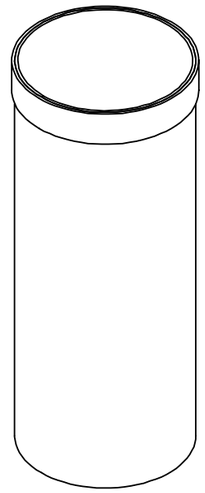

DRAWING STANDARD BS 8888:2020	DRAWN BY TT	**UNCONTROLLED IF PRINTED**	LURA LEEDS UNIVERSITY ROCKETRY ASSOCIATION
TOLERANCE STANDARD ISO 2768-mk	DRAWN DATE 28/06/24	BREAK ALL SHARP EDGES	ALL DIMENSIONS IN MM UNLESS STATED OTHERWISE
UNSPECIFIED FINISHES Ra 1.6	SIGNOFF BY TT	MATERIAL N/A	MASS (g) 8.86 / SCALE 1:1 / SHEET 1 OF 1 / A3
UNSPECIFIED THREADS BS 3643/2:1981 6H/6g	SIGNOFF DATE 28/06/24	DESCRIPTION STATOR CAN ASSEMBLY	
		DRAWING # LA-0063	

ITEM NO.	PART NUMBER	DESCRIPTION	QTY.
1	LP-0094	RETURN CAP	1
2	LA-0063	STATOR CAN ASSEMBLY	1
3	m-SEALS-SB21-E-PTVM-WD59-ID-24.6		1
4	LOCTITE-STYCAST_2850FT		1
5	BRITLUBE-BL-15502	LOX COMPATABLE GREASE	1

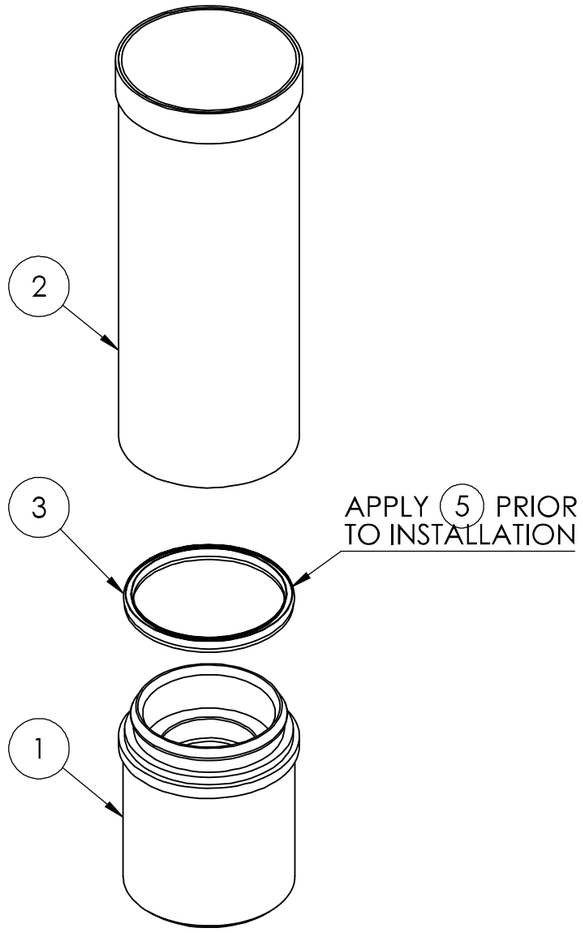

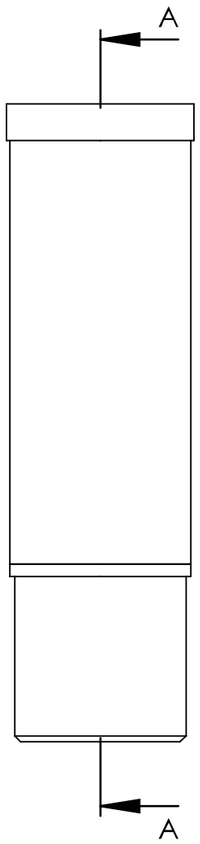

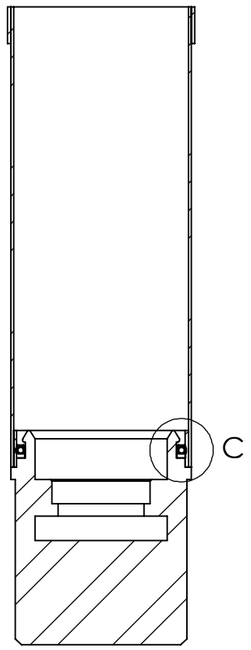

SECTION A-A

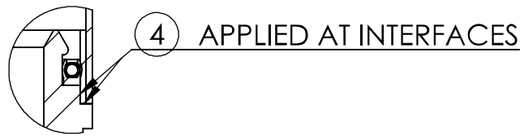

DETAIL C
SCALE 2 : 1

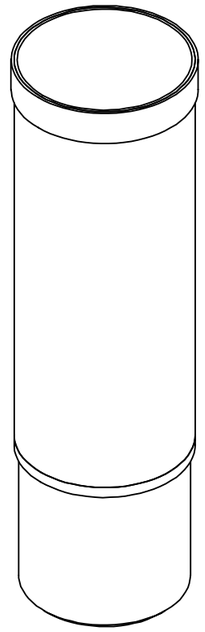

DRAWING STANDARD BS 8888:2020	DRAWN BY TT	**UNCONTROLLED IF PRINTED**	LURA LEEDS UNIVERSITY ROCKETRY ASSOCIATION
TOLERANCE STANDARD ISO 2768-mk	DRAWN DATE 20/06/24	BREAK ALL SHARP EDGES	ALL DIMENSIONS IN MM UNLESS STATED OTHERWISE
UNSPECIFIED FINISHES Ra 1.6	SIGNOFF BY TT	MATERIAL N/A	MASS (g) 118.45
UNSPECIFIED THREADS BS 3643/2:1981 6H/6g	SIGNOFF DATE 28/06/24	DESCRIPTION RETURN CAP ASSEMBLY	SCALE 1:1
		DRAWING # LA-0065	SHEET 1 OF 1
			A3

ITEM NO.	PART NUMBER	DESCRIPTION	QTY.
1	LA-0064	MODIFIED LMT3040 STATOR	1
2	LA-0065	RETURN CAP ASSEMBLY	1
3	THERMOSENSE-CF15A	TC COMPRESSION FITTING, 1.5mm OD X 1/8 BSPTM	1
4	LA-0062	PRESSURE SENSOR ASSEMBLY	1
5	THERMOSENSE-TPM-T-321-1.5-I-50-500-PFA7-FMP-CF15AS	THERMOCOUPLE, TYPE T, 1.5mm, MINI TC PLUG	1
6	LOCTITE-STYCAST_2850FT		1
7	MPT_INDUSTRIES-OC_THREE	OXYGEN COMPATABLE THREAD SEALER	1

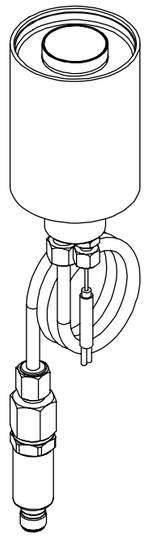

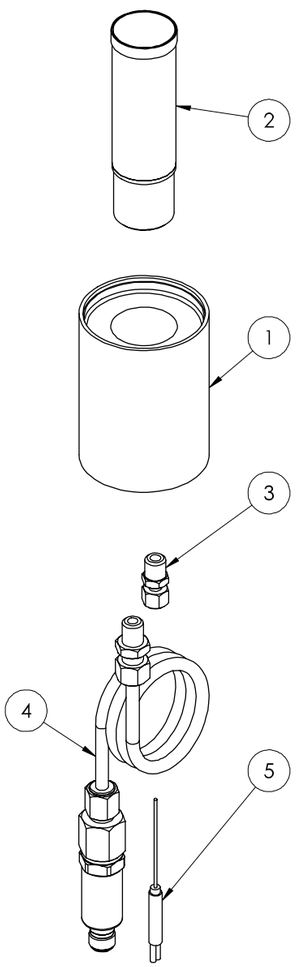

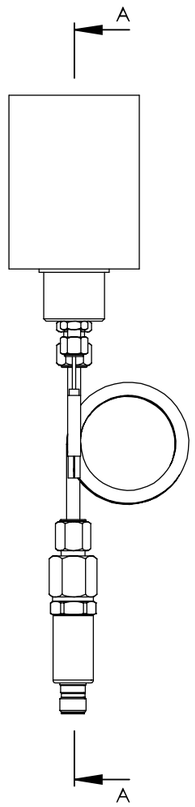

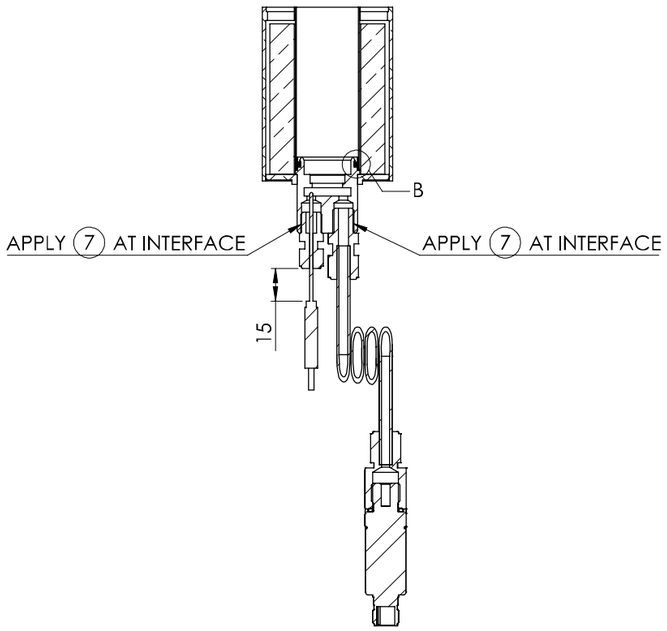

SECTION A-A

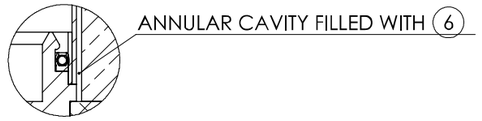

DETAIL B
SCALE 2 : 1

DRAWING STANDARD BS 8888:2020	DRAWN BY TT	UNCONTROLLED IF PRINTED	LURA LEEDS UNIVERSITY ROCKET RY ASSOC ATION
TOLERANCE STANDARD ISO 2768-mk	DRAWN DATE 28/06/24	BREAK ALL SHARP EDGES	
UNSPECIFIED FINISHES Ra 1.6	SIGNOFF BY TT	MATERIAL N/A	ALL DIMENSIONS IN MM UNLESS STATED OTHERWISE
UNSPECIFIED THREADS BS 3643/2:1981 6H/6g	SIGNOFF DATE 28/06/24	DESCRIPTION STATOR ASSEMBLY	MASS (g) 1373.53 / SCALE 1:2 / SHEET 1 OF 1 / A2
		DRAWING # LA-0066	

ITEM NO.	PART NUMBER	DESCRIPTION	QTY.
1	LP-0089	VOLUTE CASING	1
2	LP-0090	VOLUTE DIFFUSER	1
3	m-SEALS-SB21-E-PTVM-WD59-ID-30.6		1
4	LP-0091	OUTLET TOP GUSSET	1
5	LP-0092	OUTLET SIDE GUSSET	1
6	LP-0093	VOLUTE SPLIT GROOVE RING	1
7	BRITLUBE-BL-15502	LOX Compatable Grease	1

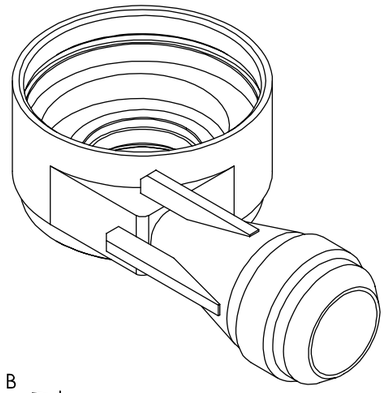

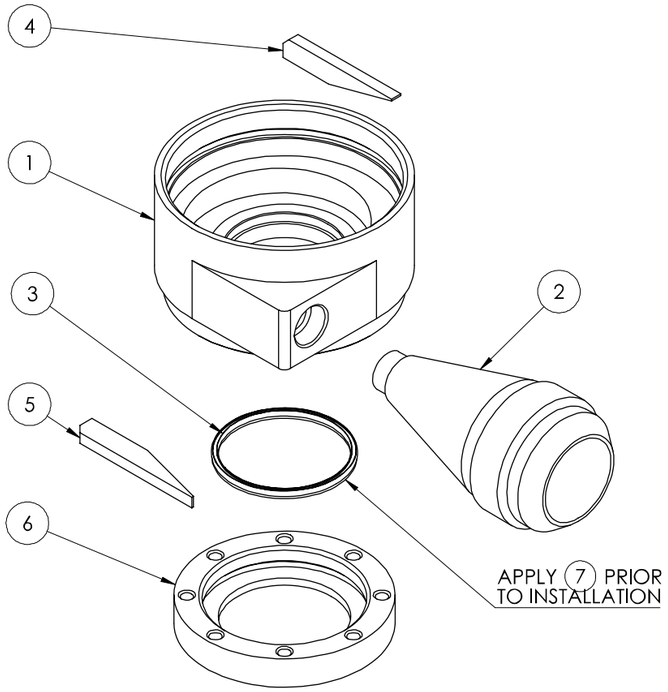

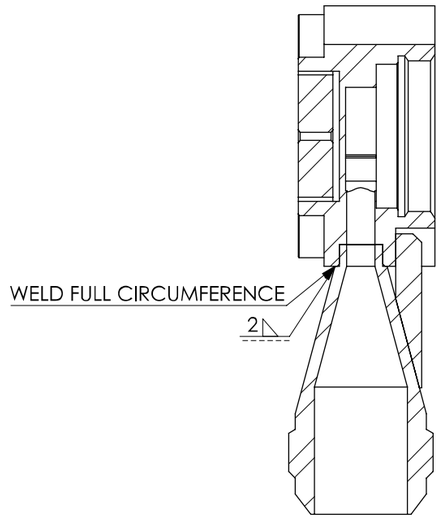

SECTION A-A

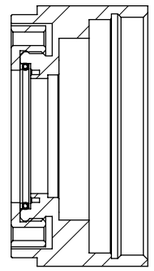

SECTION B-B

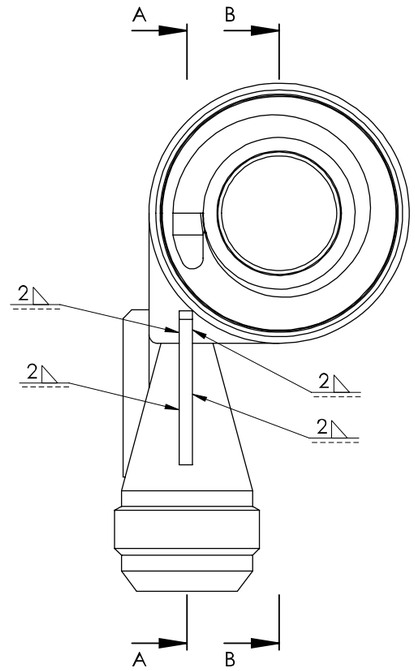

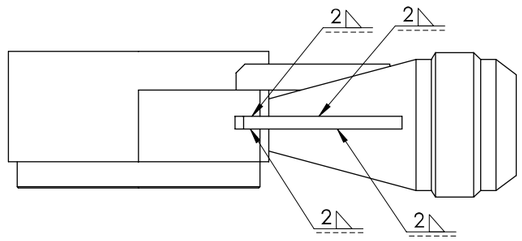

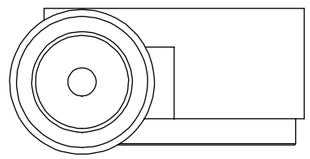

DRAWING STANDARD BS 8888:2020	DRAWN BY DB	UNCONTROLLED IF PRINTED	LURA LEEDS UNIVERSITY ROCKET RY ASSOC ATION
TOLERANCE STANDARD ISO 2768-mk	DRAWN DATE 28/06/24	BREAK ALL SHARP EDGES	ALL DIMENSIONS IN MM UNLESS STATED OTHERWISE
UNSPECIFIED FINISHES Ra 1.6	SIGNOFF BY TT	MATERIAL N/A	MASS (g) 423.69
UNSPECIFIED THREADS BS 3643/2:1981 6H/6g	SIGNOFF DATE 28/06/24	DESCRIPTION VOLUTE ASSEMBLY	SCALE 1:1
		DRAWING # LA-0061	SHEET 1 OF 1
			A2

ITEM NO.	PART NUMBER	DESCRIPTION	QTY.
1	LP-0099	SHAFT	1
2	LP-0100	MAGNET STACK CAP	1
3	LP-0101	ROTOR MAGNET	16
4	SKF-W_618-8		1
5	SKF-61805		1
6	LOCTITE-STYCAST_2850FT		1

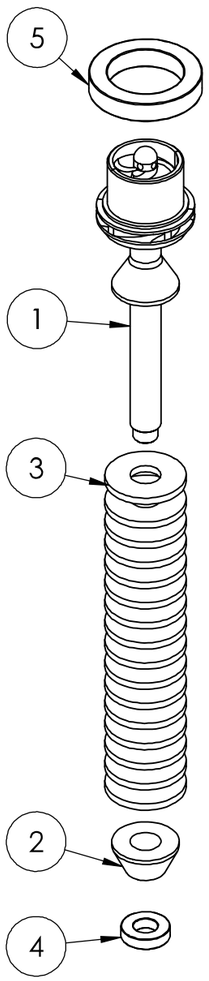

SCALE 1 : 2

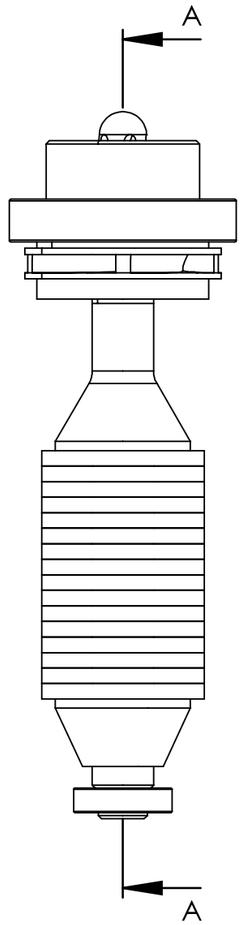

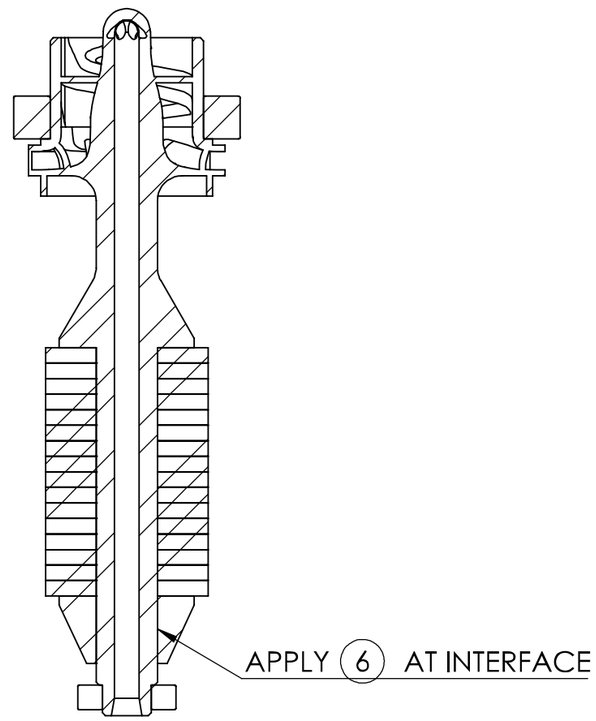

SECTION A-A

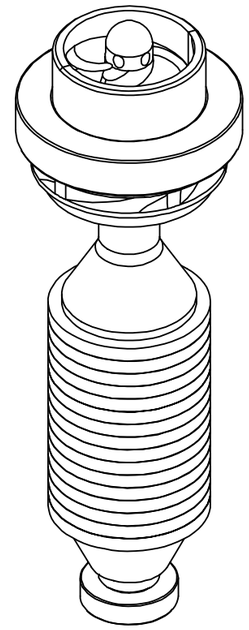

NOTES:

- APPLY 6 AT ALL 1 - 3 INTERFACES.

DRAWING STANDARD BS 8888:2020	DRAWN BY TT	**UNCONTROLLED IF PRINTED**	LURA LEEDS UNIVERSITY ROCKETRY ASSOCIATION
TOLERANCE STANDARD ISO 2768-mk	DRAWN DATE 20/06/24	BREAK ALL SHARP EDGES	ALL DIMENSIONS IN MM UNLESS STATED OTHERWISE
UNSPECIFIED FINISHES Ra 1.6	SIGNOFF BY TT	MATERIAL N/A	
UNSPECIFIED THREADS BS 3643/2:1981 6H/6g	SIGNOFF DATE 28/06/24	DESCRIPTION ROTOR ASSEMBLY	
		DRAWING # LA-0067	MASS (g) 309.84 · SCALE 1:1 · SHEET 1 OF 1 · A3

ITEM NO.	PART NUMBER	DESCRIPTION	QTY.
1	LP-0102	INLET CAP	1
2	LA-0062	PRESSURE SENSOR ASSEMBLY	1
3	THERMOSENSE-CF15A	TC COMPRESSION FITTING, 1.5mm OD X 1/8 BSPTM	1
4	THERMOSENSE-TPM-T-321-1.5-I-50-500-PFA7-FMP-CF15AS	THERMOCOUPLE, TYPE T, 1.5mm, MINI TC PLUG	1
5	m-SEALS-SB21-E-PTVM-WD59-ID-51		1
6	BRITLUBE-BL-15502	LOX COMPATABLE GREASE	1
7	MPT_INDUSTRIES-OC_THREE	OXYGEN COMPATABLE THREAD SEALER	1

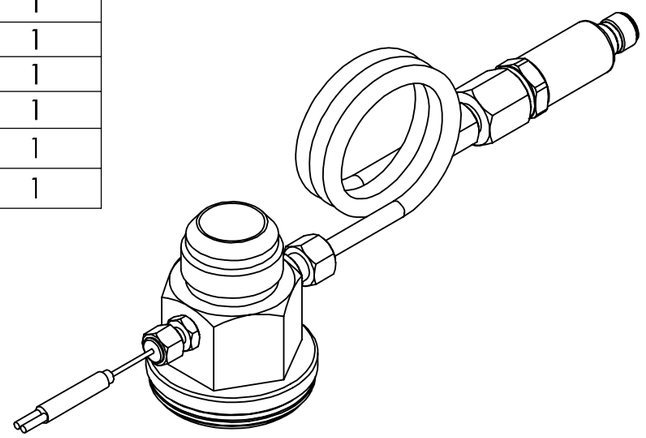

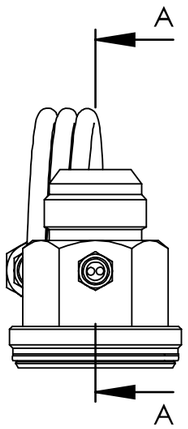

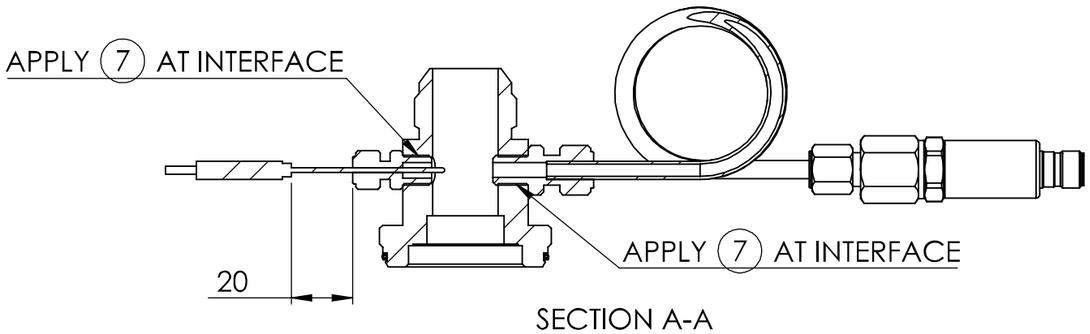

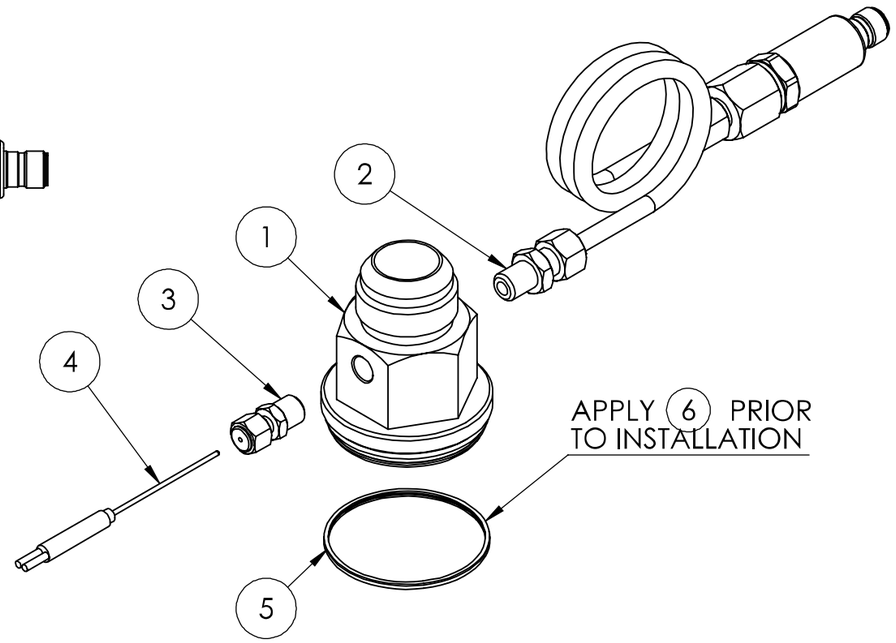

DRAWING STANDARD BS 8888:2020	DRAWN BY DB	UNCONTROLLED IF PRINTED	LURA LEEDS UNIVERSITY ROCKETRY ASSOCIATION
TOLERANCE STANDARD ISO 2768-mk	DRAWN DATE 28/06/24	BREAK ALL SHARP EDGES	ALL DIMENSIONS IN MM UNLESS STATED OTHERWISE
UNSPECIFIED FINISHES Ra 1.6	SIGNOFF BY TT	MATERIAL N/A	MASS (g) 740.65 / SCALE 1:2 / SHEET 1 OF 1 / A3
UNSPECIFIED THREADS BS 3643/2:1981 6H/6g	SIGNOFF DATE 28/06/24	DESCRIPTION INLET CAP ASSEMBLY	
		DRAWING # LA-0068	

ITEM NO.	PART NUMBER	DESCRIPTION	QTY.
1	LA-0066	STATOR ASSEMBLY	1
2	LA-0067	ROTOR ASSEMBLY	1
3	LA-0061	VOLUTE ASSEMBLY	1
4	LA-0068	INLET CAP ASSEMBLY	1

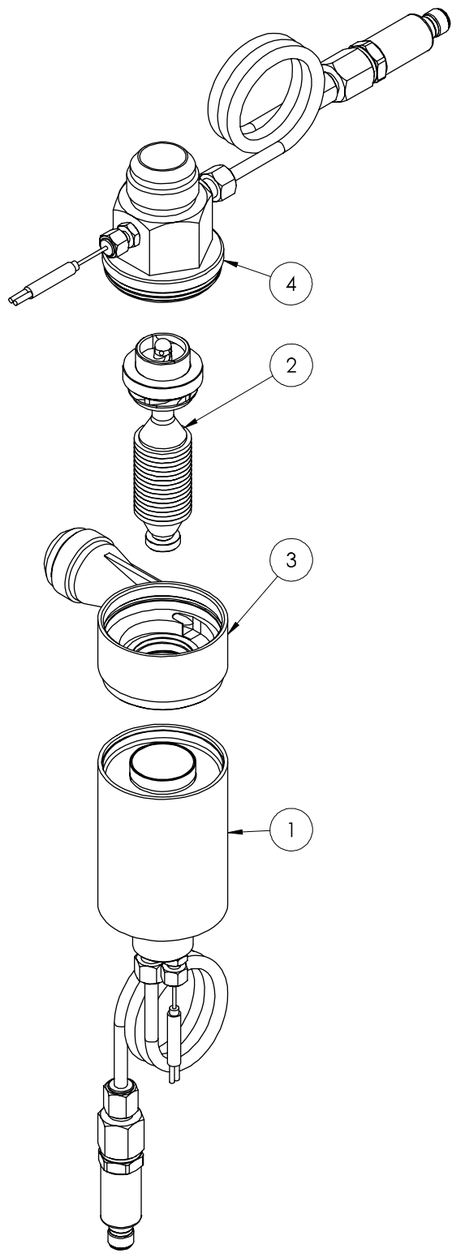

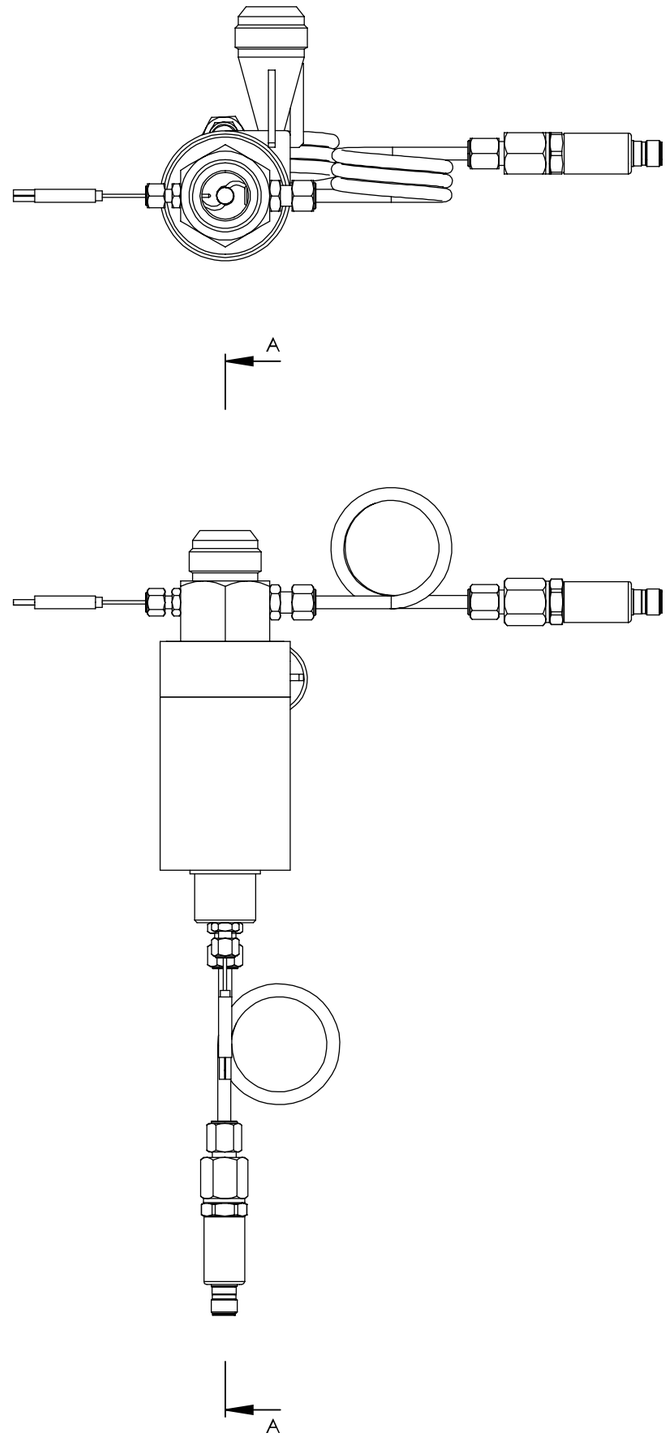

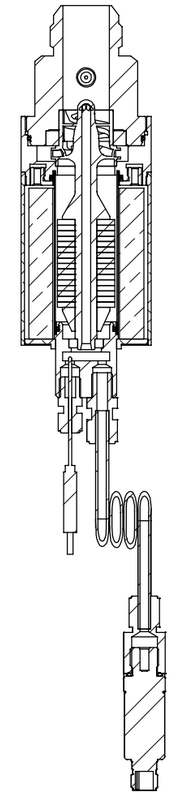

SECTION A-A

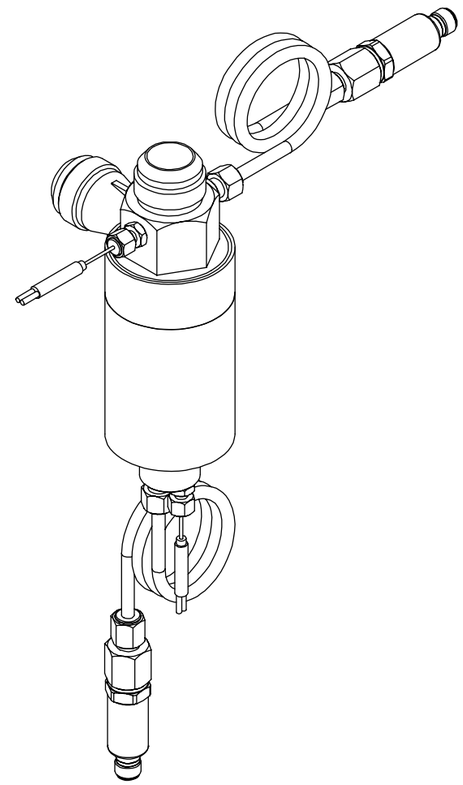

DRAWING STANDARD BS 8888:2020	DRAWN BY TT	UNCONTROLLED IF PRINTED	LURA LEEDS UNIVERSITY ROCKETRY ASSOCIATION
TOLERANCE STANDARD ISO 2768-mk	DRAWN DATE 20/06/24	BREAK ALL SHARP EDGES	
UNSPECIFIED FINISHES Ra 1.6	SIGNOFF BY TT	MATERIAL N/A	ALL DIMENSIONS IN MM UNLESS STATED OTHERWISE
UNSPECIFIED THREADS BS 3643/2:1981 6H/6g	SIGNOFF DATE 28/06/24	DESCRIPTION PUMP ASSEMBLY	MASS (g) 2847.71 / SCALE 1:2 / SHEET 1 OF 1 / A2
		DRAWING # LA-0069	

ITEM NO.	PART NUMBER	DESCRIPTION	QTY.
1	LA-0062	PRESSURE SENSOR ASSEMBLY	2
2	LP-0103	VENTURI ADAPTER	1
3	THERMOSENSE-CF15A	TC COMPRESSION FITTING, 1.5mm OD X 1/8 BSPTM	1
4	THERMOSENSE-TPM-T-321-1.5-I-50-500-PFA7-FMP-CF15AS	THERMOCOUPLE, TYPE T, 1.5mm, MINI TC PLUG	1
5	MPT_INDUSTRIES-OC_THREE	OXYGEN COMPATABLE THREAD SEALER	1

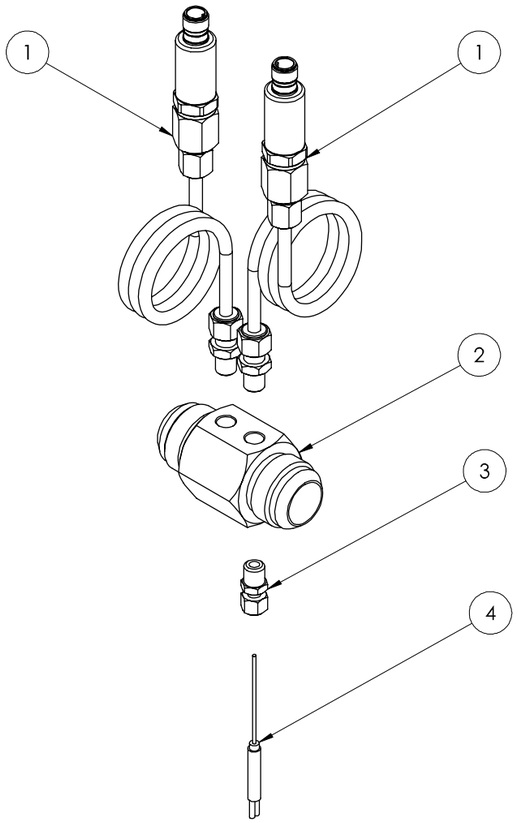

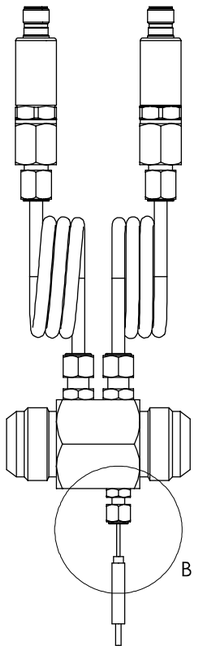

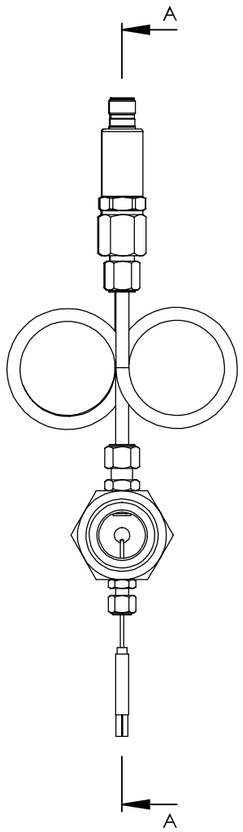

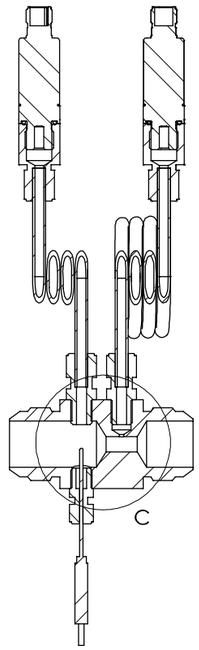

SECTION A-A

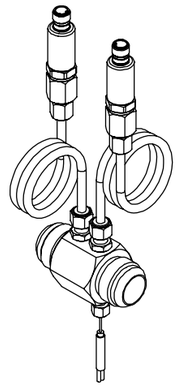

SCALE 1:3

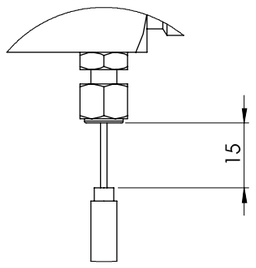

DETAIL B
SCALE 1 : 1

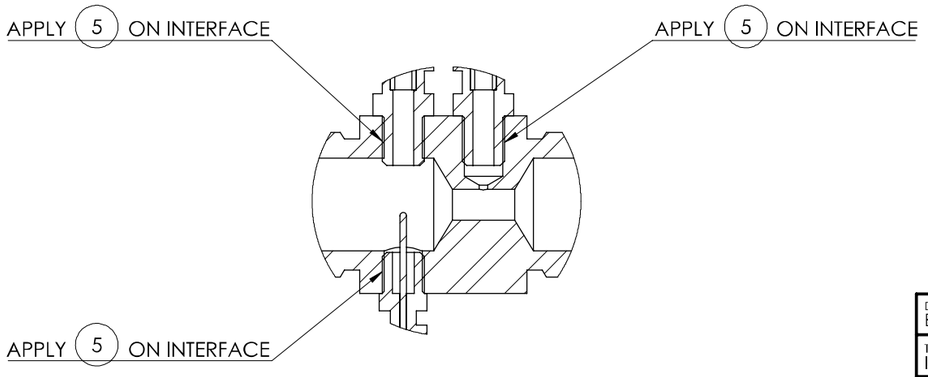

DETAIL C
SCALE 1 : 1

DRAWING STANDARD BS 8888:2020	DRAWN BY DB	UNCONTROLLED IF PRINTED	LURA LEEDS UNIVERSITY ROCKET RY ASSOC ATION
TOLERANCE STANDARD ISO 2768-mk	DRAWN DATE 28/06/24	BREAK ALL SHARP EDGES	ALL DIMENSIONS IN MM UNLESS STATED OTHERWISE
UNSPECIFIED FINISHES Ra 1.6	SIGNOFF BY TT	MATERIAL N/A	
UNSPECIFIED THREADS BS 3643/2:1981 6H/6g	SIGNOFF DATE 28/06/24	DESCRIPTION VENTURI ASSEMBLY	MASS (g) 1043.48 · SCALE 1:2 · SHEET 1 OF 1 · A2
		DRAWING # LA-0072	

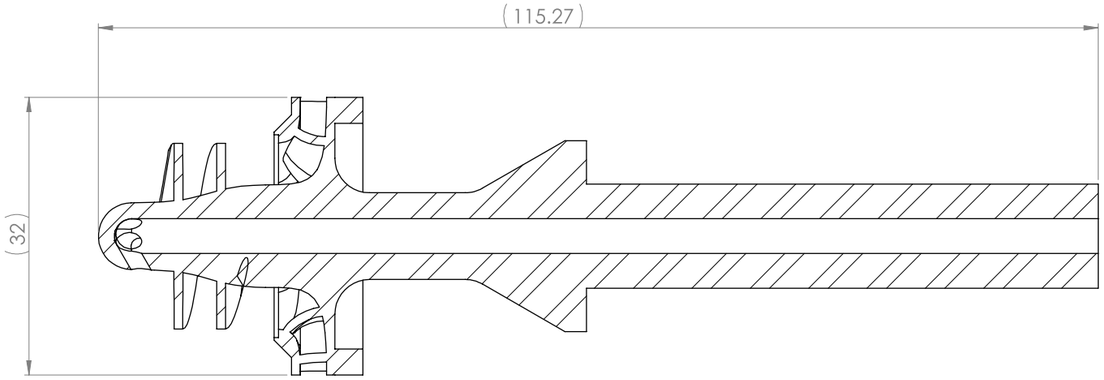

SECTION A-A

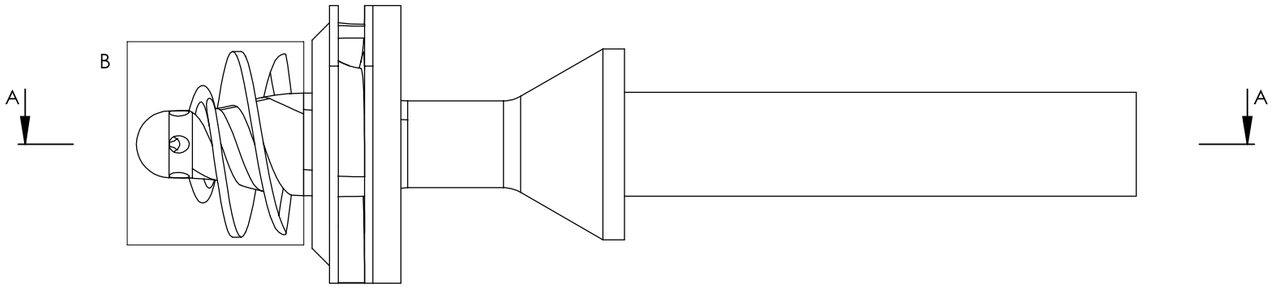

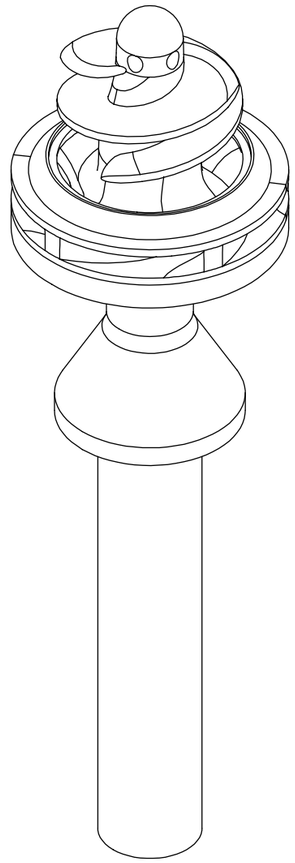

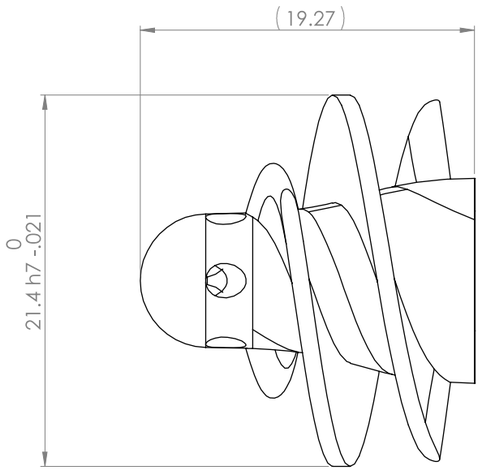

DETAIL B
SCALE 4 : 1

NOTES:

1. REFER TO SOLID MODEL FOR UNSPECIFIED GEOMETRY
2. UNSPECIFIED SURFACES TO MATCH SOLID MODEL WITHIN ⌓ 0.4
3. BEAD BLAST ALL SURFACES WITH #120 GRIT
4. ALL EXTERNAL SURFACES IN DETAIL B TO BE HAVE SURFACE FINISH OF Ra 0.8

DRAWING STANDARD BS 8888:2020	DRAWN BY DB	**UNCONTROLLED IF PRINTED**	LURA LEEDS UNIVERSITY ROCKETRY ASSOCIATION
TOLERANCE STANDARD ISO 2768-mk	DRAWN DATE 03/07/24	BREAK ALL SHARP EDGES	ALL DIMENSIONS IN MM UNLESS STATED OTHERWISE
UNSPECIFIED FINISHES Ra 3.2	SIGNOFF BY TT	MATERIAL AISI TYPE 316L STAINLESS STEEL	MASS (g) 122.34 / SCALE 2:1 / SHEET 1 OF 1 / A2
UNSPECIFIED THREADS BS 3643/2:1981 6H/6g	SIGNOFF DATE 04/07/24	DESCRIPTION SHAFT	
		DRAWING # LP-0099-REVB	

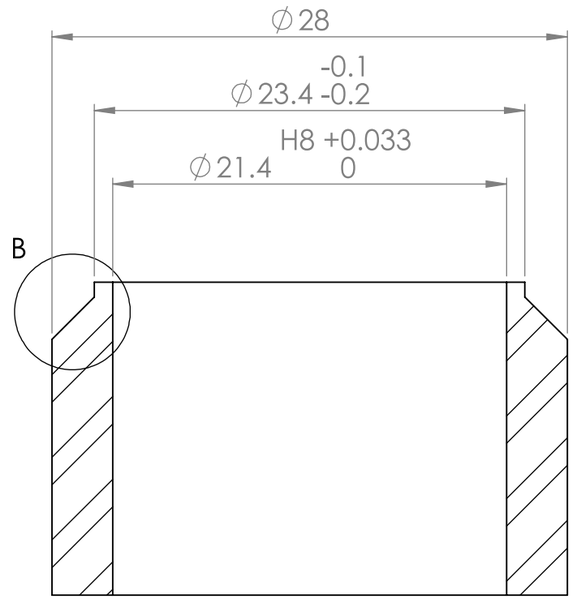

SECTION A-A

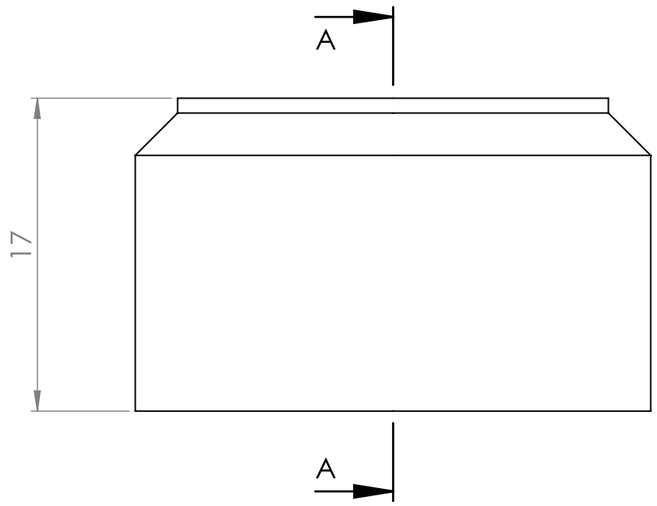

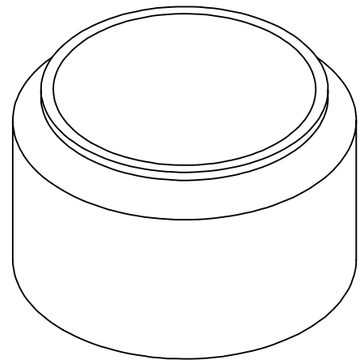

SCALE 2:1

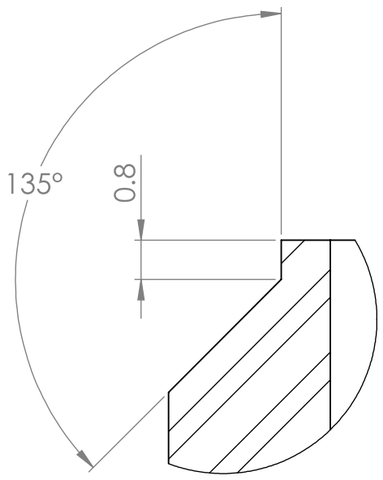

DETAIL B
SCALE 8 : 1

DRAWING STANDARD BS 8888:2020	DRAWN BY DB	**UNCONTROLLED IF PRINTED**	LURA LEEDS UNIVERSITY ROCKETRY ASSOCIATION
TOLERANCE STANDARD ISO 2768-mk	DRAWN DATE 03/07/24	BREAK ALL SHARP EDGES	
UNSPECIFIED FINISHES Ra 1.6	SIGNOFF BY TT	MATERIAL AISI TYPE 316L STAINLESS STEEL	ALL DIMENSIONS IN MM UNLESS STATED OTHERWISE
UNSPECIFIED THREADS BS 3643/2:1981 6H/6g	SIGNOFF DATE 04/07/24	DESCRIPTION INDUCER SHROUD	MASS (g) 31.99 · SCALE 3:1 · SHEET 1 OF 1 · A3
		DRAWING # LP-0110	

ITEM NO.	PART NUMBER	DESCRIPTION	QTY.
1	LP-0099-REVB	SHAFT	1
2	LP-0110	INDUCER SHROUD	1

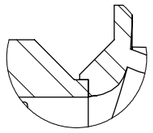

DETAIL B
SCALE 4 : 1

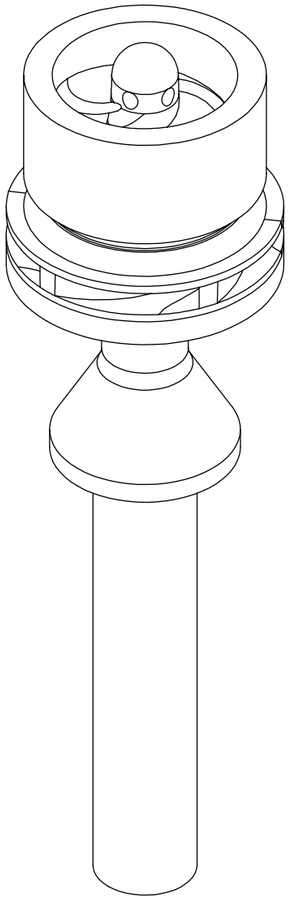

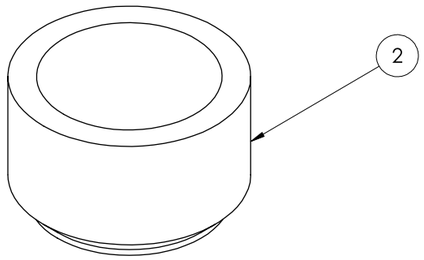

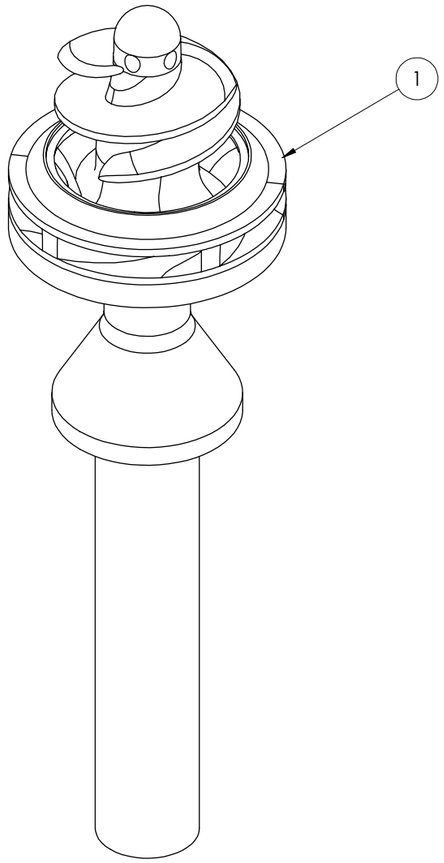

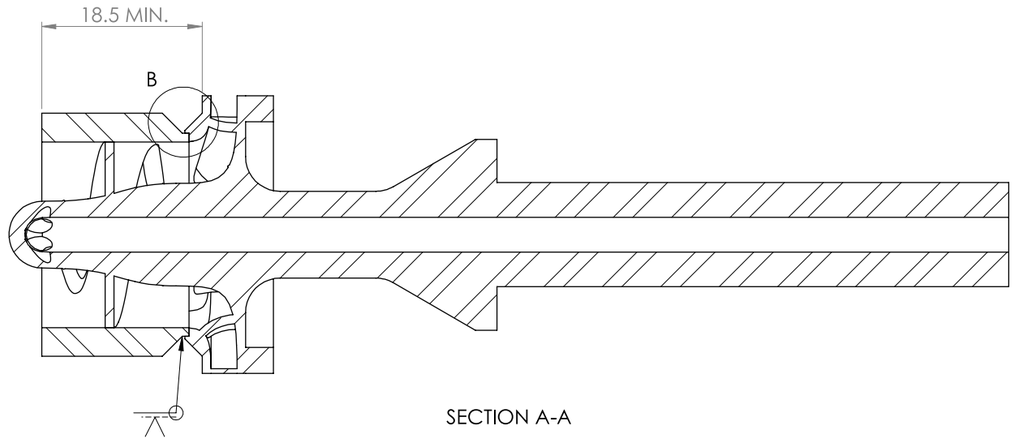

SECTION A-A

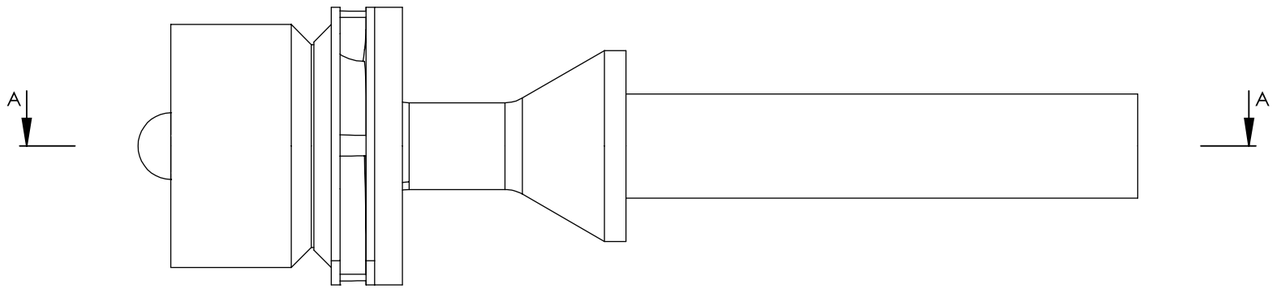

NOTES:
1. ASSEMBLY PRESENTED IN THE INITIAL AS-WELDED CONFIGURATION

DRAWING STANDARD BS 8888:2020	DRAWN BY DB	**UNCONTROLLED IF PRINTED**	LURA LEEDS UNIVERSITY ROCKETRY ASSOCIATION
TOLERANCE STANDARD ISO 2768-mk	DRAWN DATE 03/07/24	BREAK ALL SHARP EDGES	ALL DIMENSIONS IN MM UNLESS STATED OTHERWISE
UNSPECIFIED FINISHES Ra 1.6	SIGNOFF BY TT	MATERIAL AISI TYPE 316L STAINLESS STEEL	MASS (g) 154.33
UNSPECIFIED THREADS BS 3643/2:1981 6H/6g	SIGNOFF DATE 04/07/24	DESCRIPTION SHAFT ASSEMBLY	SCALE 2:1
		DRAWING # LA-0075	SHEET 1 OF 2
			A2

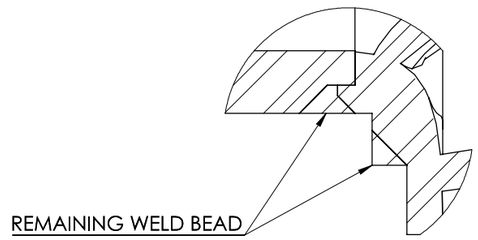

DETAIL E
SCALE 8 : 1

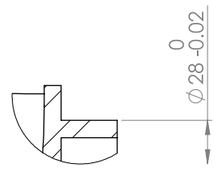

DETAIL F
SCALE 4 : 1

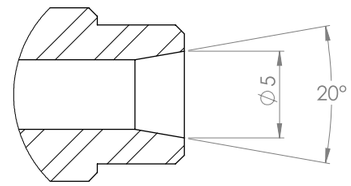

DETAIL D
SCALE 4 : 1

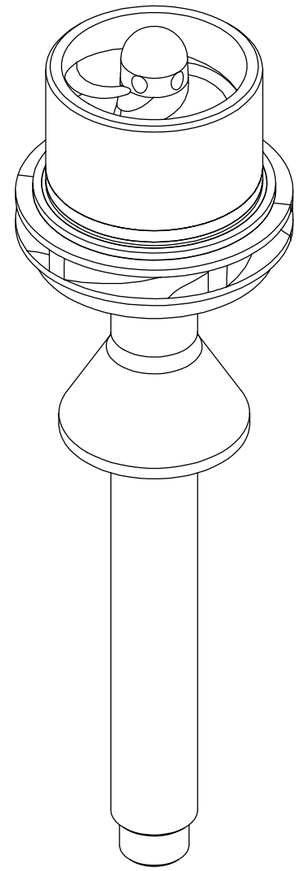

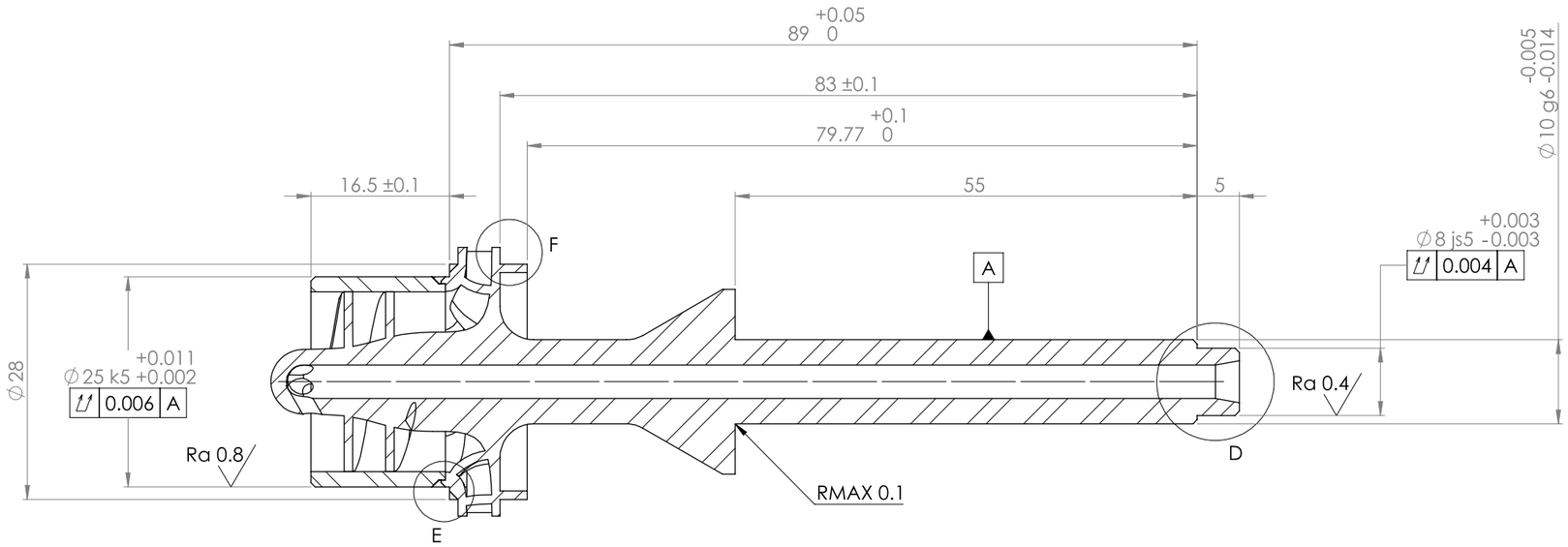

SECTION C-C

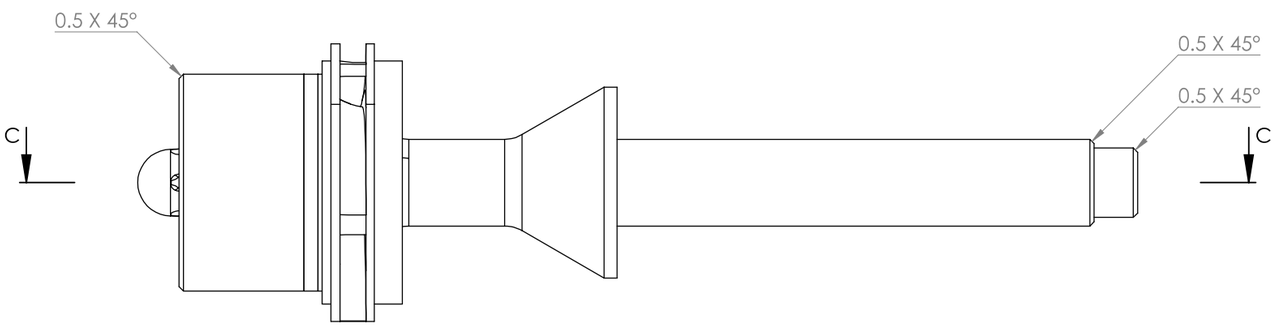

NOTES:
1. ASSEMBLY PRESENTED IN THE FINAL AS-MACHINED CONFIGURATION

DRAWING STANDARD BS 8888:2020	DRAWN BY DB	**UNCONTROLLED IF PRINTED**	LURA LEEDS UNIVERSITY ROCKETRY ASSOCIATION
TOLERANCE STANDARD ISO 2768-mk	DRAWN DATE 03/07/24	BREAK ALL SHARP EDGES	
UNSPECIFIED FINISHES Ra 1.6	SIGNOFF BY TT	MATERIAL AISI TYPE 316L STAINLESS STEEL	ALL DIMENSIONS IN MM UNLESS STATED OTHERWISE
UNSPECIFIED THREADS BS 3643/2:1981 6H/6g	SIGNOFF DATE 04/07/24	DESCRIPTION SHAFT ASSEMBLY	MASS (g) 154.33 · SCALE 2:1 · SHEET 2 OF 2 · A2
		DRAWING # LA-0075	