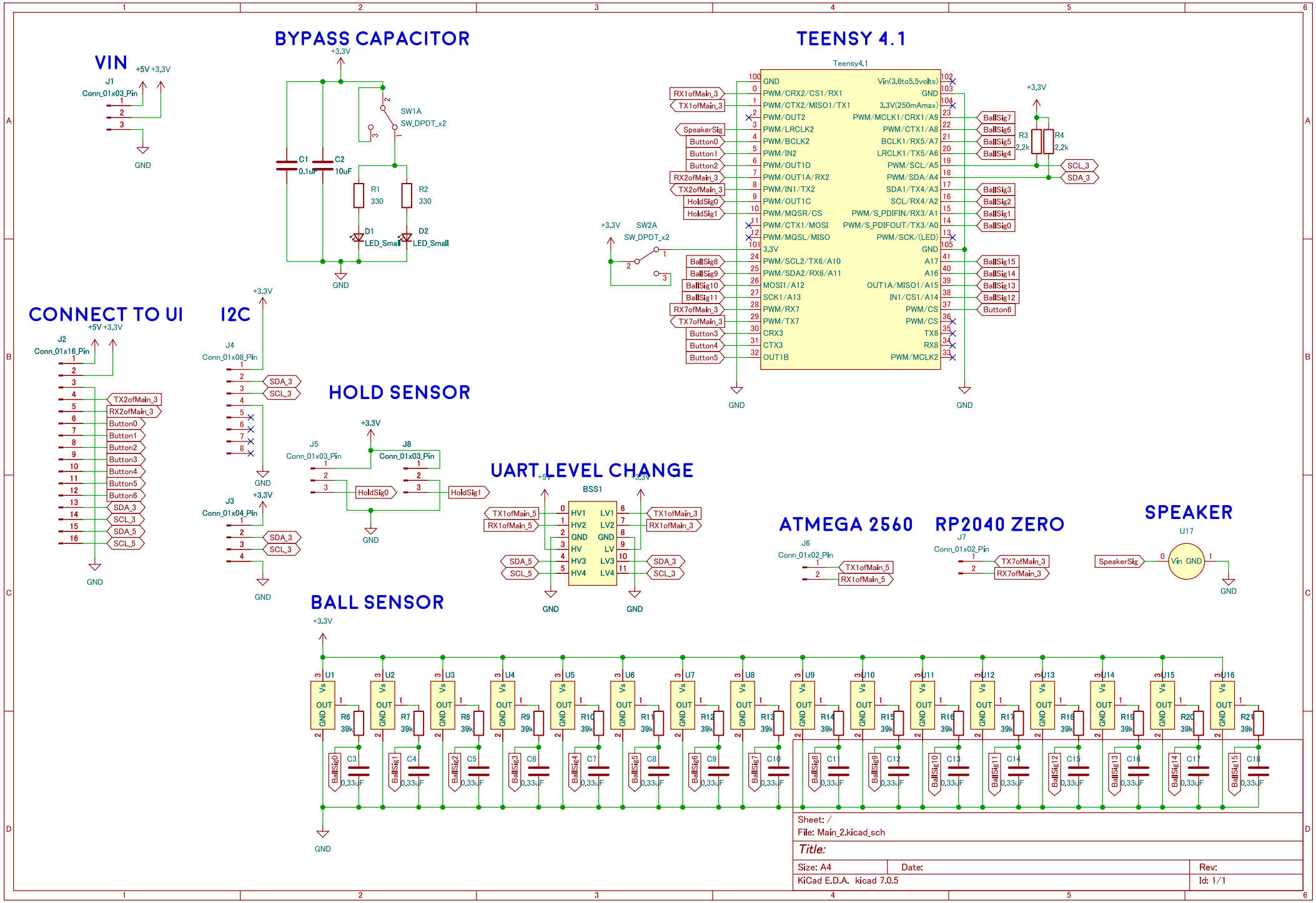
VIN
J1
Conn_01x03_Pin
+5V +3.3V
GND
BYPASS CAPACITOR
+3.3V
SW1A
SW_DPDT_x2
C1
0.1uF
C2
10uF
R1
330
R2
330
D1
LED_Small
D2
LED_Small
GND
TEENSY 4.1
Teensy4.1
GND
PWM/CRX2/CS1/RX1
PWM/CTX2/MISO1/TX1
PWM/OUT2
PWM/LRCLK2
PWM/BCLK2
PWM/IN2
PWM/OUT1D
PWM/OUT1A/RX2
PWM/IN1/TX2
PWM/OUT1C
PWM/MQSR/CS
PWM/CTX1/MOSI
PWM/MQSL/MISO
3.3V
PWM/SCL2/TX6/A10
PWM/SDA2/RX6/A11
MOSI1/A12
SCK1/A13
PWM/RX7
PWM/TX7
CRX3
CTX3
OUT1B
Vin(3.6to5.5volts)
GND
3.3V(250mAmax)
PWM/MCLK1/CRX1/A9
PWM/CTX1/A8
BCLK1/RX5/A7
LRCLK1/TX5/A6
PWM/SCL/A5
PWM/SDA/A4
SDA1/TX4/A3
SCL/RX4/A2
PWM/S_PDIFIN/RX3/A1
PWM/S_PDIFOUT/TX3/A0
PWM/SCK/(LED)
GND
A17
A16
OUT1A/MISO1/A15
IN1/CS1/A14
PWM/CS
PWM/CS
TX8
RX8
PWM/MCLK2
RX1ofMain_3
TX1ofMain_3
SpeakerSig
Button0
Button1
Button2
RX2ofMain_3
TX2ofMain_3
HoldSig0
HoldSig1
BallSig8
BallSig9
BallSig10
BallSig11
RX7ofMain_3
TX7ofMain_3
Button3
Button4
Button5
BallSig7
BallSig6
BallSig5
BallSig4
BallSig3
BallSig2
BallSig1
BallSig0
BallSig15
BallSig14
BallSig13
BallSig12
Button6
SCL_3
SDA_3
R3
2.2k
R4
2.2k
+3.3V
SW2A
SW_DPDT_x2
CONNECT TO UI
J2
Conn_01x16_Pin
+5V +3.3V
TX2ofMain_3
RX2ofMain_3
Button0
Button1
Button2
Button3
Button4
Button5
Button6
SDA_3
SCL_3
SDA_5
SCL_5
GND
I2C
J4
Conn_01x08_Pin
+3.3V
SDA_3
SCL_3
GND
J3
Conn_01x04_Pin
+3.3V
SDA_3
SCL_3
GND
HOLD SENSOR
J5
Conn_01x03_Pin
J8
Conn_01x03_Pin
+3.3V
HoldSig0
HoldSig1
GND
UART LEVEL CHANGE
BSS1
+5V
+3.3V
TX1ofMain_5
RX1ofMain_5
SDA_5
SCL_5
HV1
HV2
GND
HV
HV3
HV4
LV1
LV2
GND
LV
LV3
LV4
TX1ofMain_3
RX1ofMain_3
SDA_3
SCL_3
GND
GND
ATMEGA 2560
J6
Conn_01x02_Pin
TX1ofMain_5
RX1ofMain_5
RP2040 ZERO
J7
Conn_01x02_Pin
TX7ofMain_3
RX7ofMain_3
SPEAKER
U17
SpeakerSig
Vin GND
GND
BALL SENSOR
+3.3V
U1
U2
U3
U4
U5
U6
U7
U8
U9
U10
U11
U12
U13
U14
U15
U16
Vs
OUT
GND
R6 39k
R7 39k
R8 39k
R9 39k
R10 39k
R11 39k
R12 39k
R13 39k
R14 39k
R15 39k
R16 39k
R17 39k
R18 39k
R19 39k
R20 39k
R21 39k
C3 0.33uF
C4 0.33uF
C5 0.33uF
C6 0.33uF
C7 0.33uF
C8 0.33uF
C9 0.33uF
C10 0.33uF
C11 0.33uF
C12 0.33uF
C13 0.33uF
C14 0.33uF
C15 0.33uF
C16 0.33uF
C17 0.33uF
C18 0.33uF
GND
Sheet: /
File: Main_2.kicad_sch
Title:
Size: A4
Date:
Rev:
KiCad E.D.A. kicad 7.0.5
Id: 1/1