Rev	Pos	Description of revision	Approved	Date

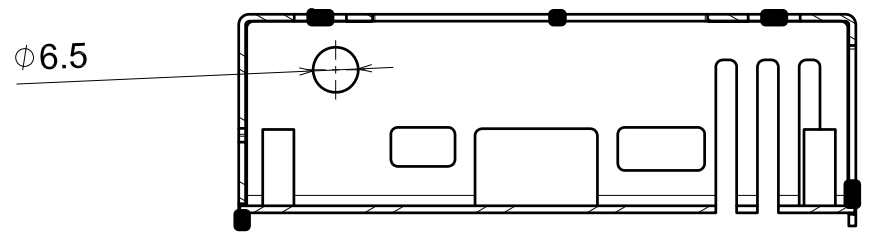

Section view C-C
Scale: 1:1

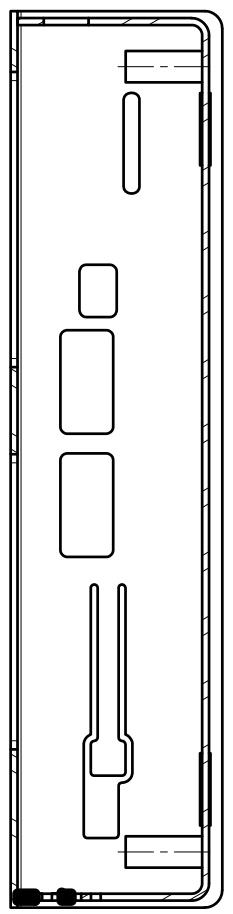

Section view A-A
Scale: 1:1

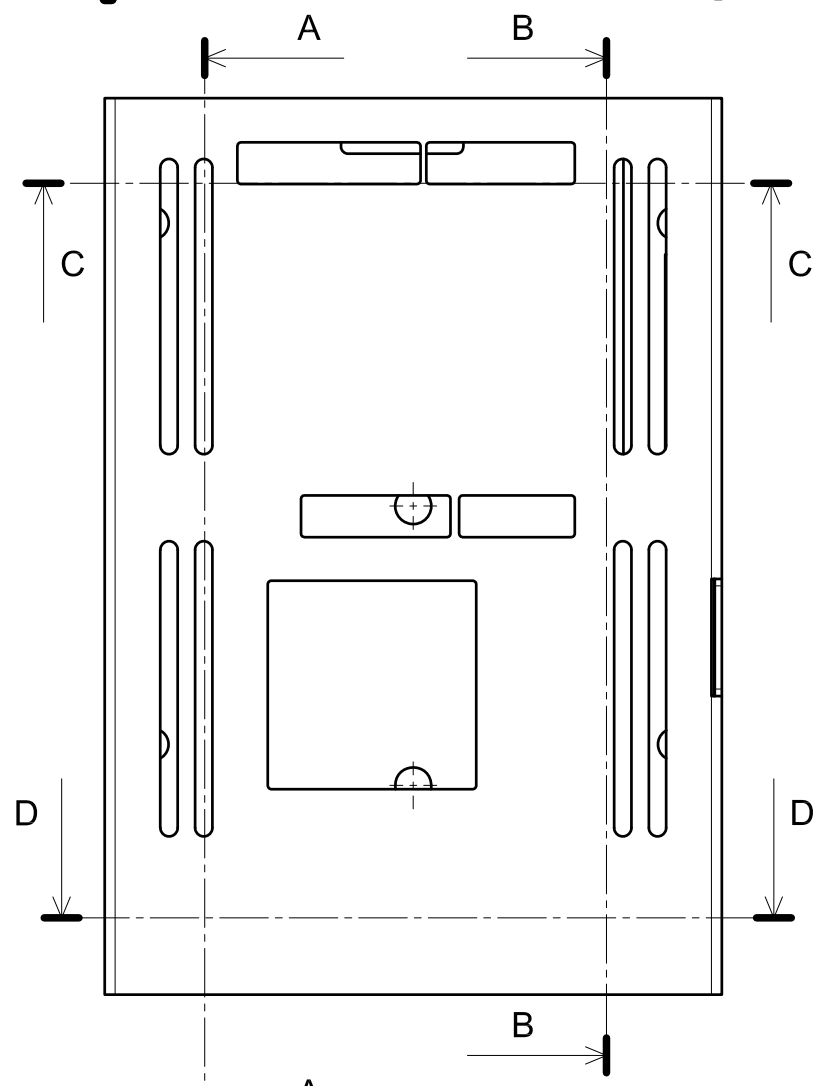

Top view
Scale: 1:1

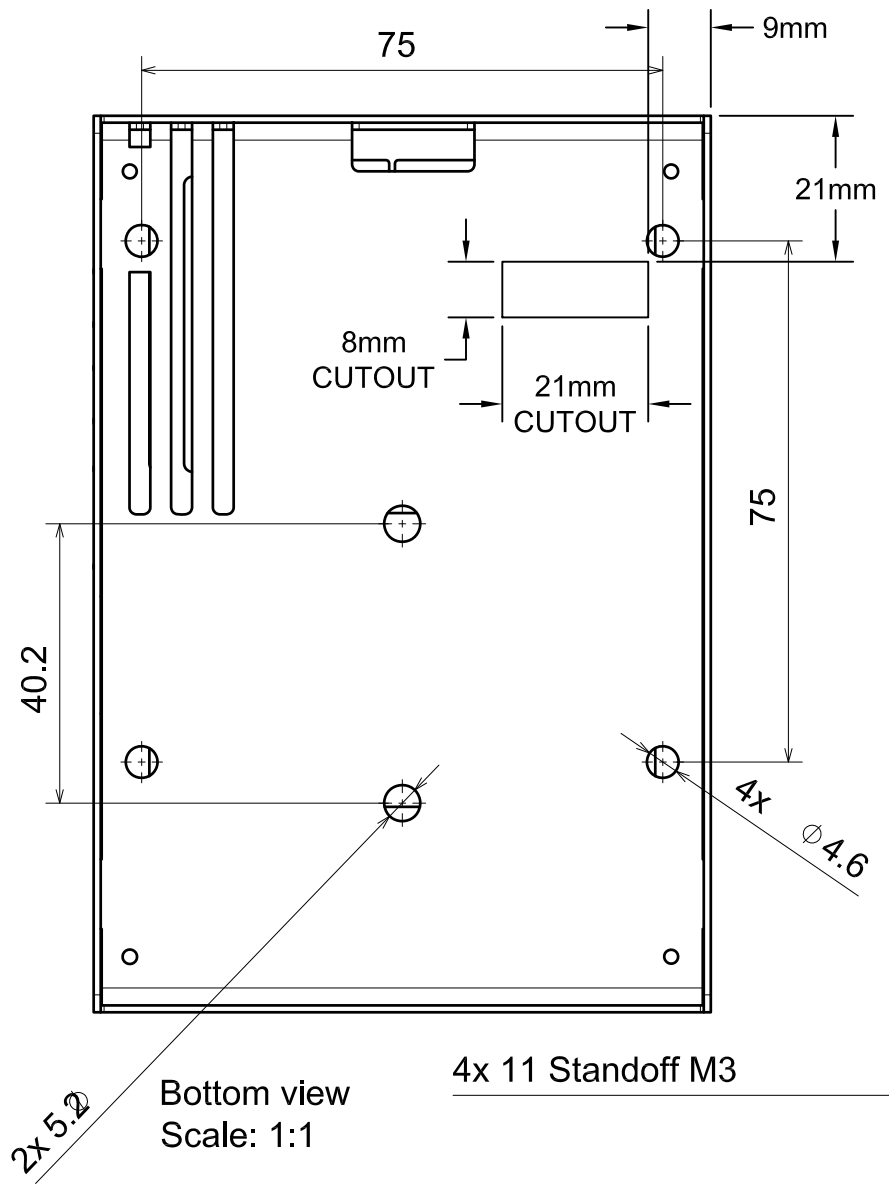

Bottom view
Scale: 1:1

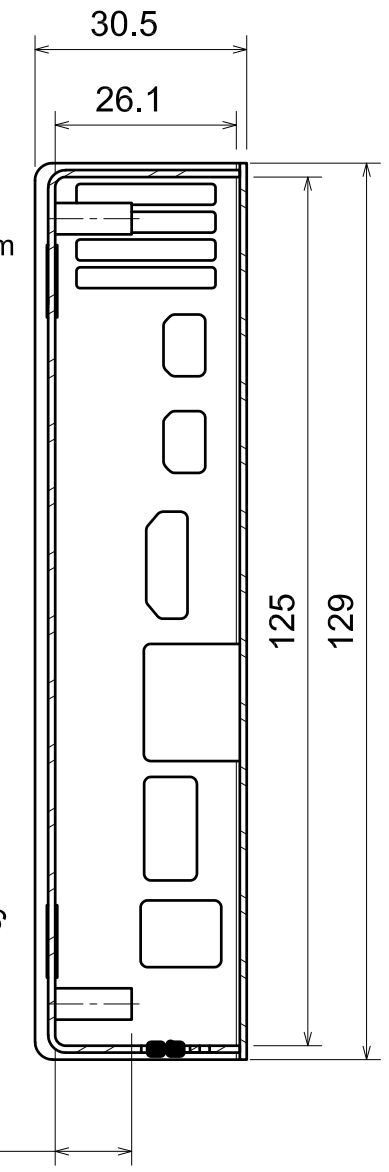

Section view B-B
Scale: 1:1

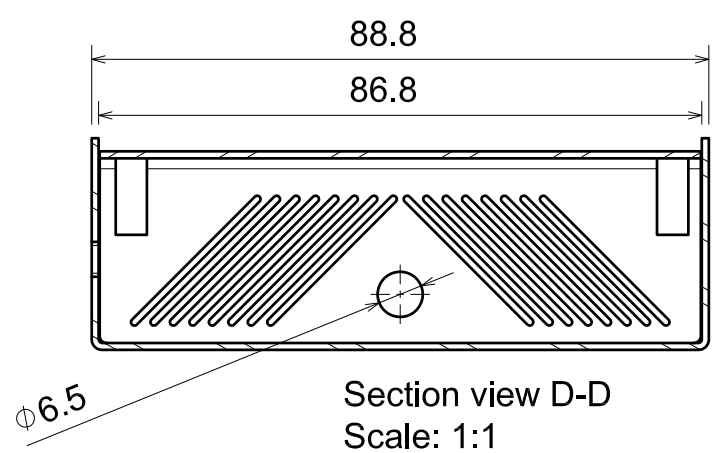

Section view D-D
Scale: 1:1

TEM	REF NUMBER	DESCRIPTION	MATERIAL	REMARKS
1	1	-	Aluminum	Unit: metric

View pos	Sign	General tolerance: SS-ISO 2768-1-m	Weight: .
	Checked: .	Approved: . / Drawing file: .	Scale (If not 1:1): 1:1
		Titel (max 20 pos): Interface drawing KKSB Udoox86	Date: 2018-02-02 / Sheet
			Drawing no / Rev.: A

This drawing and design is the property of
Kungsbacka Konstruktion & Skärande Bearbetning.
It may not be copied, shown
or handed to any third party without our permission.

A3