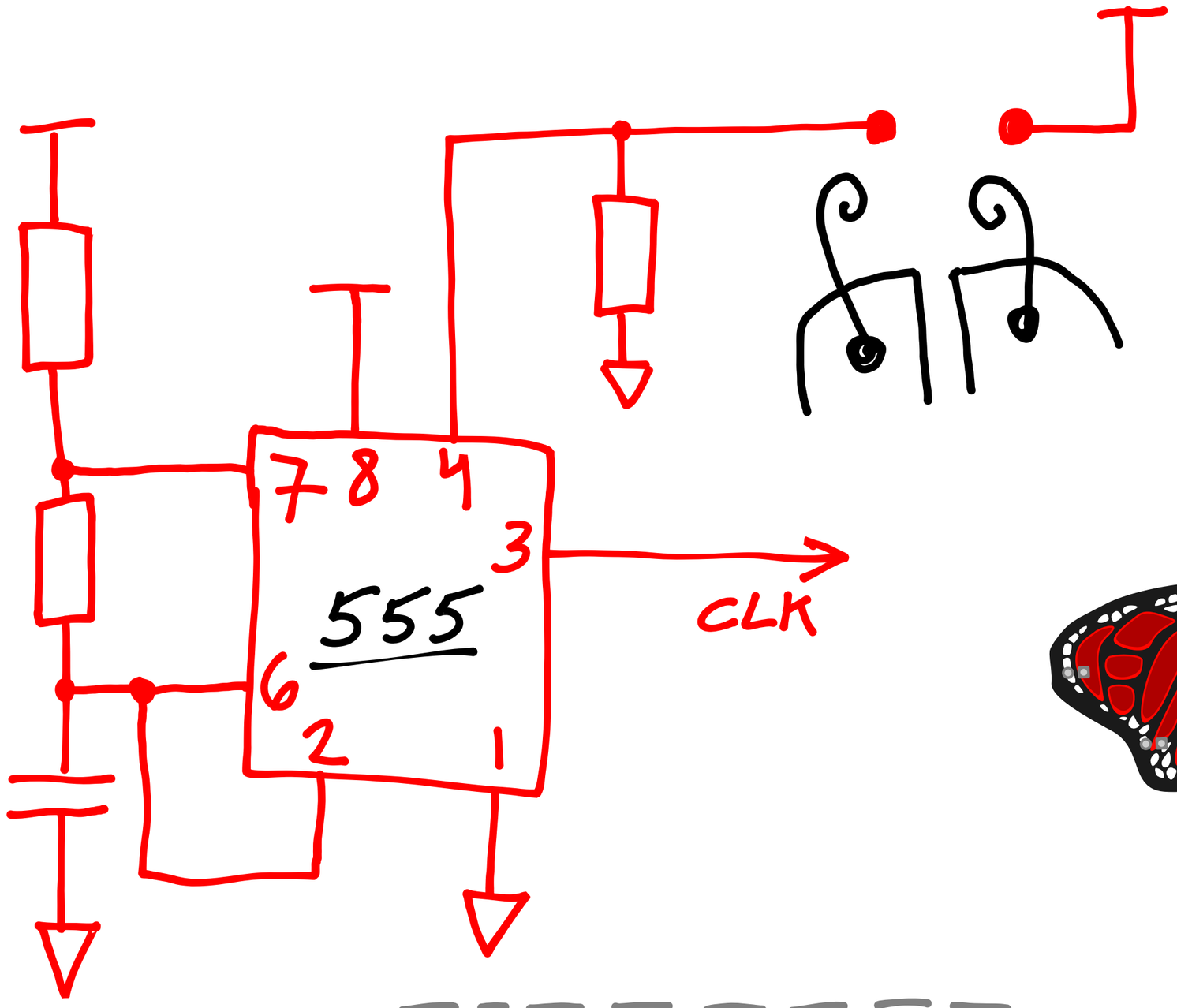

BOLDPORT CLUB

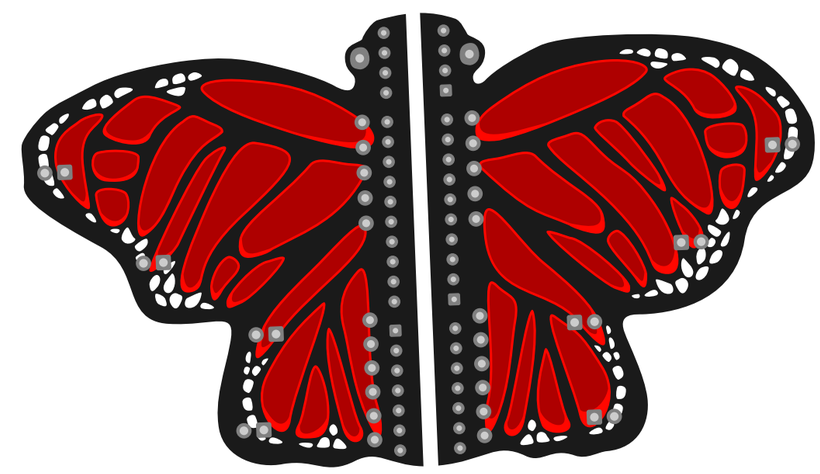
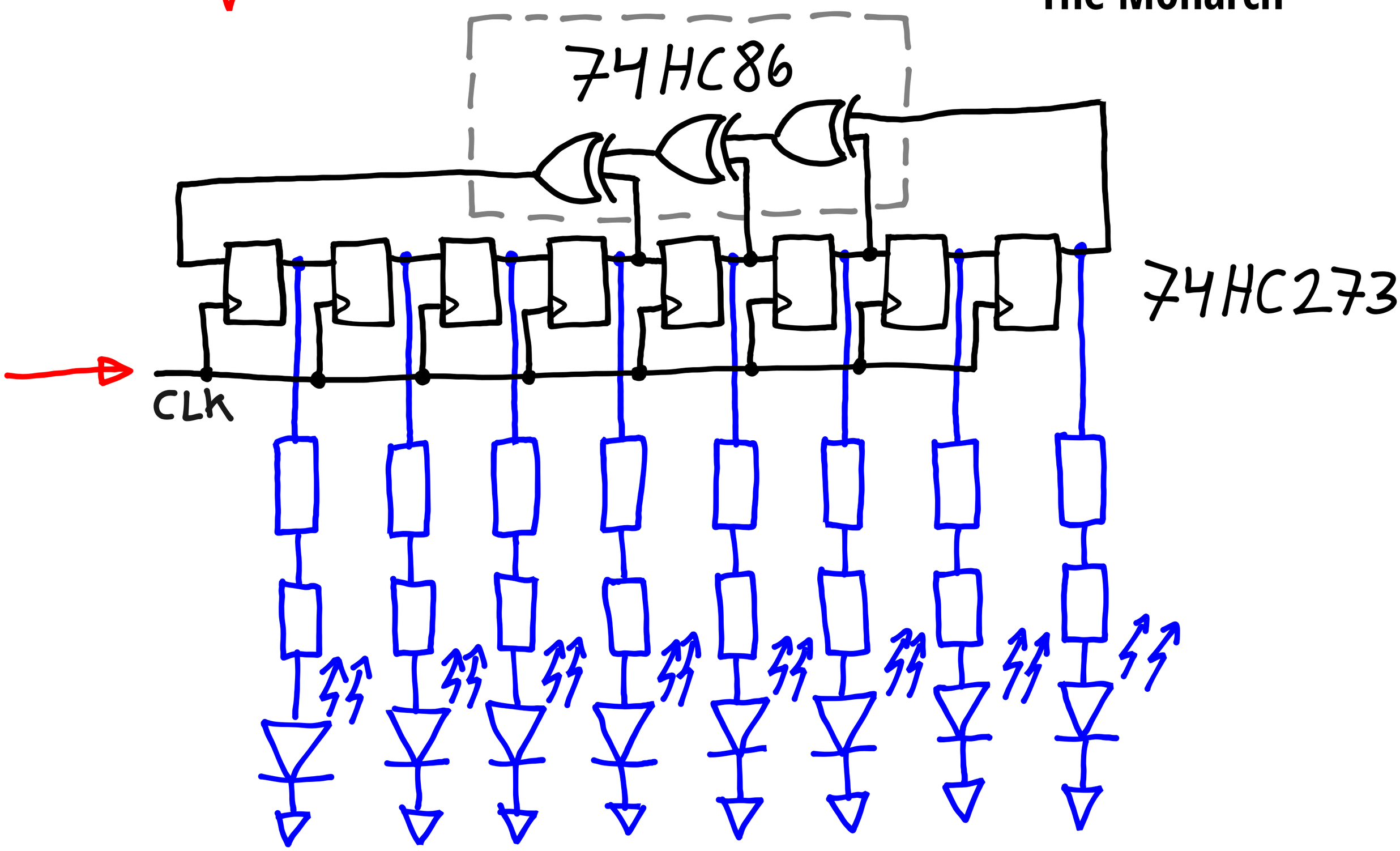
The Monarch