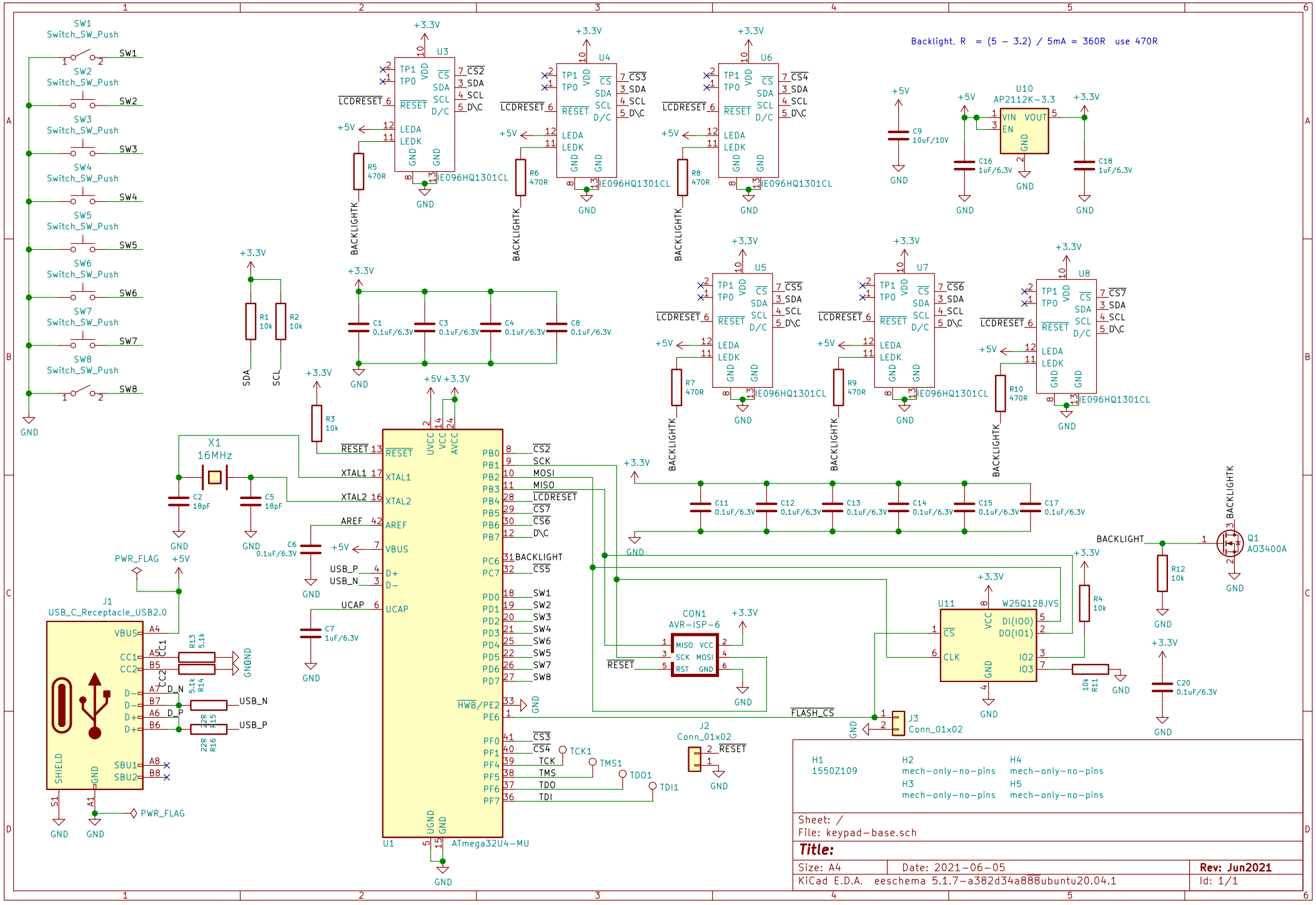
Backlight, R = (5 − 3.2) / 5mA = 360R use 470R
SW1 Switch_SW_Push
SW2 Switch_SW_Push
SW3 Switch_SW_Push
SW4 Switch_SW_Push
SW5 Switch_SW_Push
SW6 Switch_SW_Push
SW7 Switch_SW_Push
SW8 Switch_SW_Push
U3
U4
U5
U6
U7
U8
IE096HQ1301CL
LCDRESET
BACKLIGHTK
R5 470R
R6 470R
R7 470R
R8 470R
R9 470R
R10 470R
U10 AP2112K-3.3
C9 10uF/10V
C16 1uF/6.3V
C18 1uF/6.3V
R1 10k
R2 10k
R3 10k
C1 0.1uF/6.3V
C3 0.1uF/6.3V
C4 0.1uF/6.3V
C8 0.1uF/6.3V
C11 0.1uF/6.3V
C12 0.1uF/6.3V
C13 0.1uF/6.3V
C14 0.1uF/6.3V
C15 0.1uF/6.3V
C17 0.1uF/6.3V
X1 16MHz
C2 18pF
C5 18pF
C6 0.1uF/6.3V
C7 1uF/6.3V
U1 ATmega32U4-MU
J1 USB_C_Receptacle_USB2.0
R13 5.1k
R14 5.1k
R15 22R
R16 22R
PWR_FLAG
CON1 AVR-ISP-6
J2 Conn_01x02
J3 Conn_01x02
U11 W25Q128JVS
R4 10k
R11 10k
C20 0.1uF/6.3V
R12 10k
Q1 AO3400A
BACKLIGHT
H1 1550Z109
H2 mech-only-no-pins
H3 mech-only-no-pins
H4 mech-only-no-pins
H5 mech-only-no-pins
Sheet: /
File: keypad-base.sch
Title:
Size: A4
Date: 2021-06-05
Rev: Jun2021
KiCad E.D.A. eeschema 5.1.7-a382d34a888ubuntu20.04.1
Id: 1/1