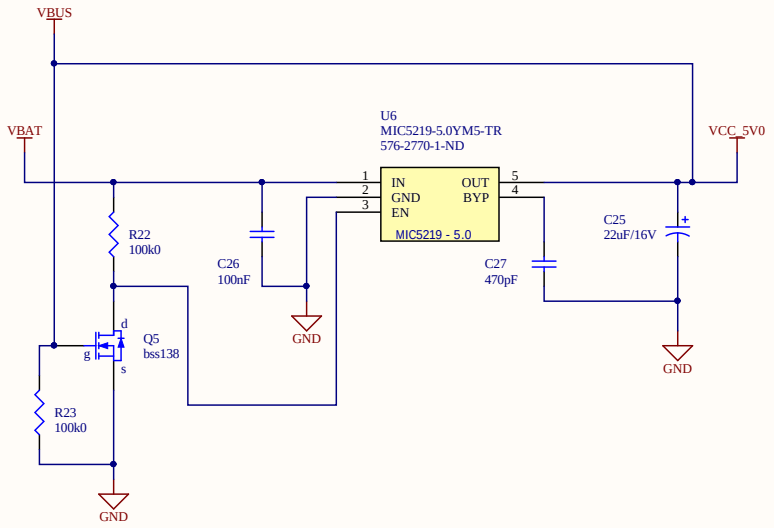

Title		
Size Legal	Number	Revision
Date: 4/1/2020		Sheet of
File: C:\Users\..\p05_newstuff.SchDoc		Drawn By: