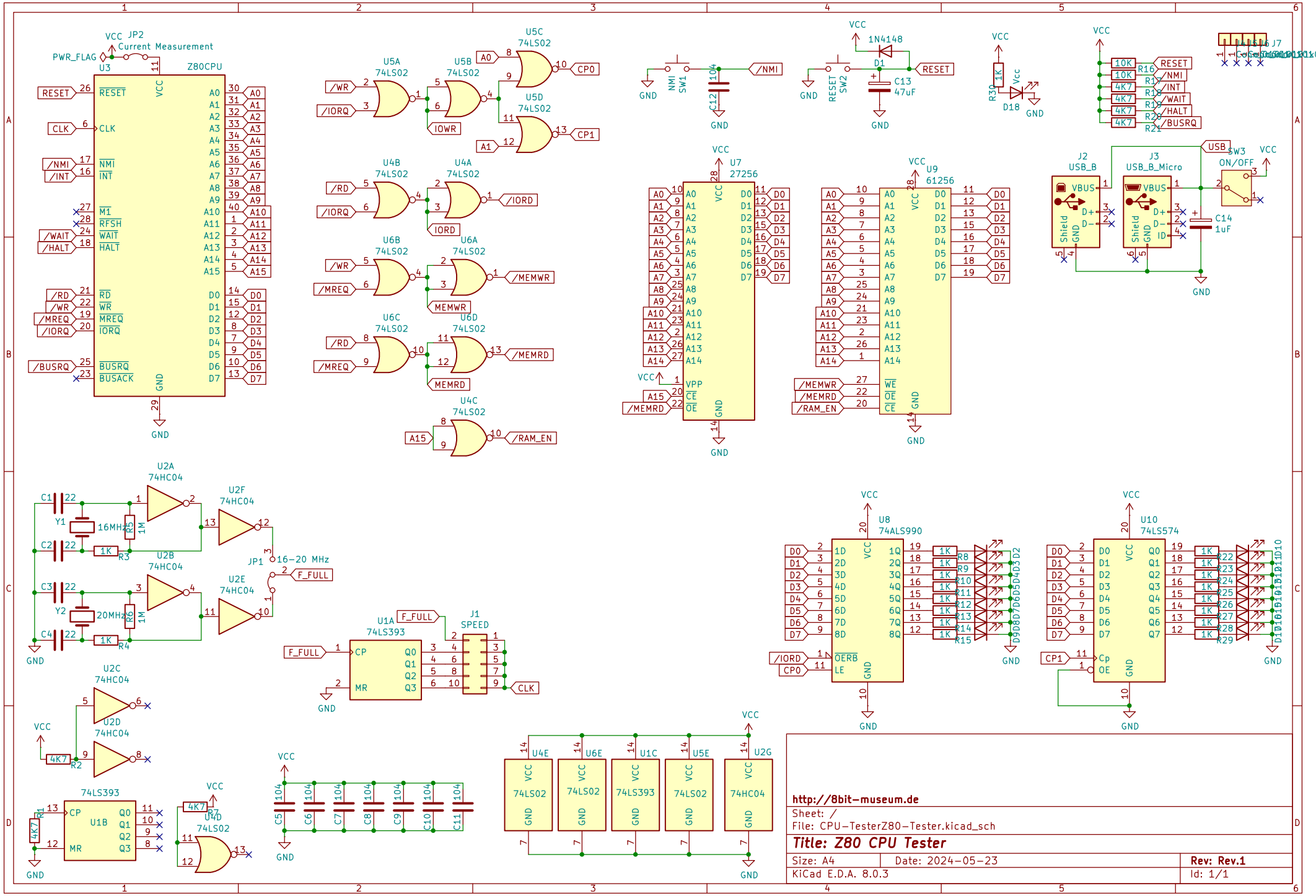
U3 Z80CPU
JP2 Current Measurement
PWR_FLAG
U5A 74LS02
U5B 74LS02
U5C 74LS02
U5D 74LS02
U4B 74LS02
U4A 74LS02
U6B 74LS02
U6A 74LS02
U6C 74LS02
U6D 74LS02
U4C 74LS02
U7 27256
U9 61256
NMI SW1
RESET SW2
1N4148
C13 47uF
C12 104
R30 1K
D18
J7
J2 USB_B
J3 USB_B_Micro
SW3 ON/OFF
C14 1uF
U2A 74HC04
U2B 74HC04
U2C 74HC04
U2D 74HC04
U2E 74HC04
U2F 74HC04
Y1 16MHz
Y2 20MHz
JP1 16-20 MHz
U1A 74LS393
J1 SPEED
U8 74ALS990
U10 74LS574
U1B 74LS393
U4D 74LS02
U4E 74LS02
U6E 74LS02
U1C 74LS393
U5E 74LS02
U2G 74HC04
http://8bit-museum.de
Sheet: /
File: CPU-TesterZ80-Tester.kicad_sch
Title: Z80 CPU Tester
Size: A4
Date: 2024-05-23
Rev: Rev.1
KiCad E.D.A. 8.0.3
Id: 1/1