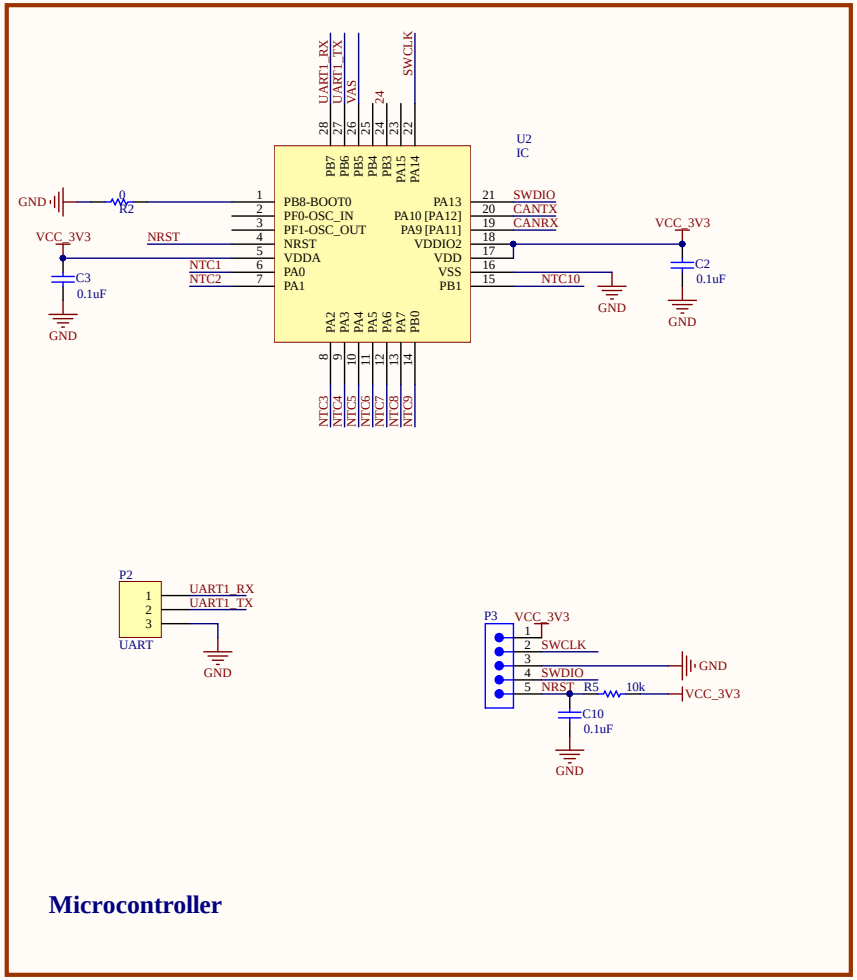

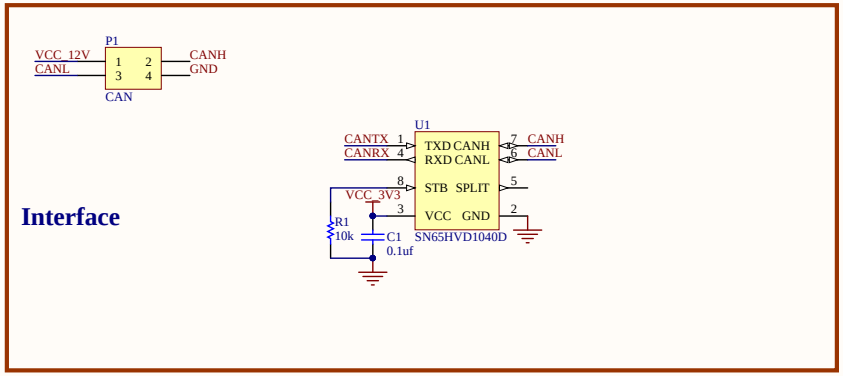

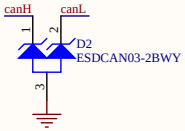

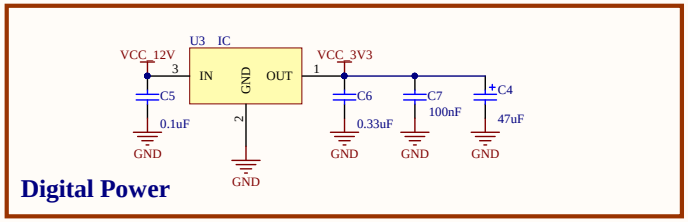

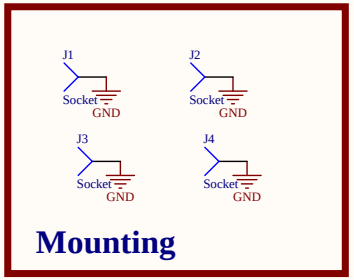

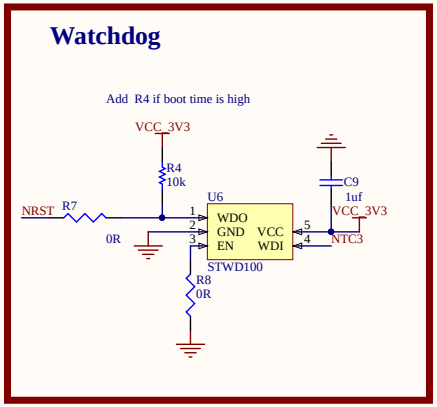

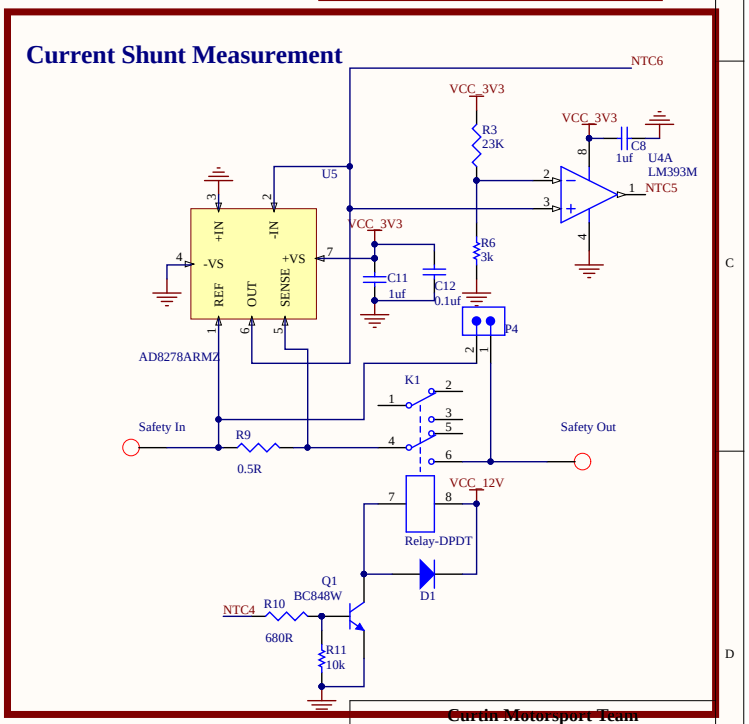

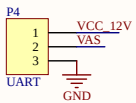

Curtin Motorsport Team

Rm 151, Bldg 206
Curtin University
Kent Street, Bently
Western Australia

Title: *		Year: *
Project: *	Status: *	Revision: *
Design Date: 13/11/2018		Sheet * of *
Author: *		Checked: *