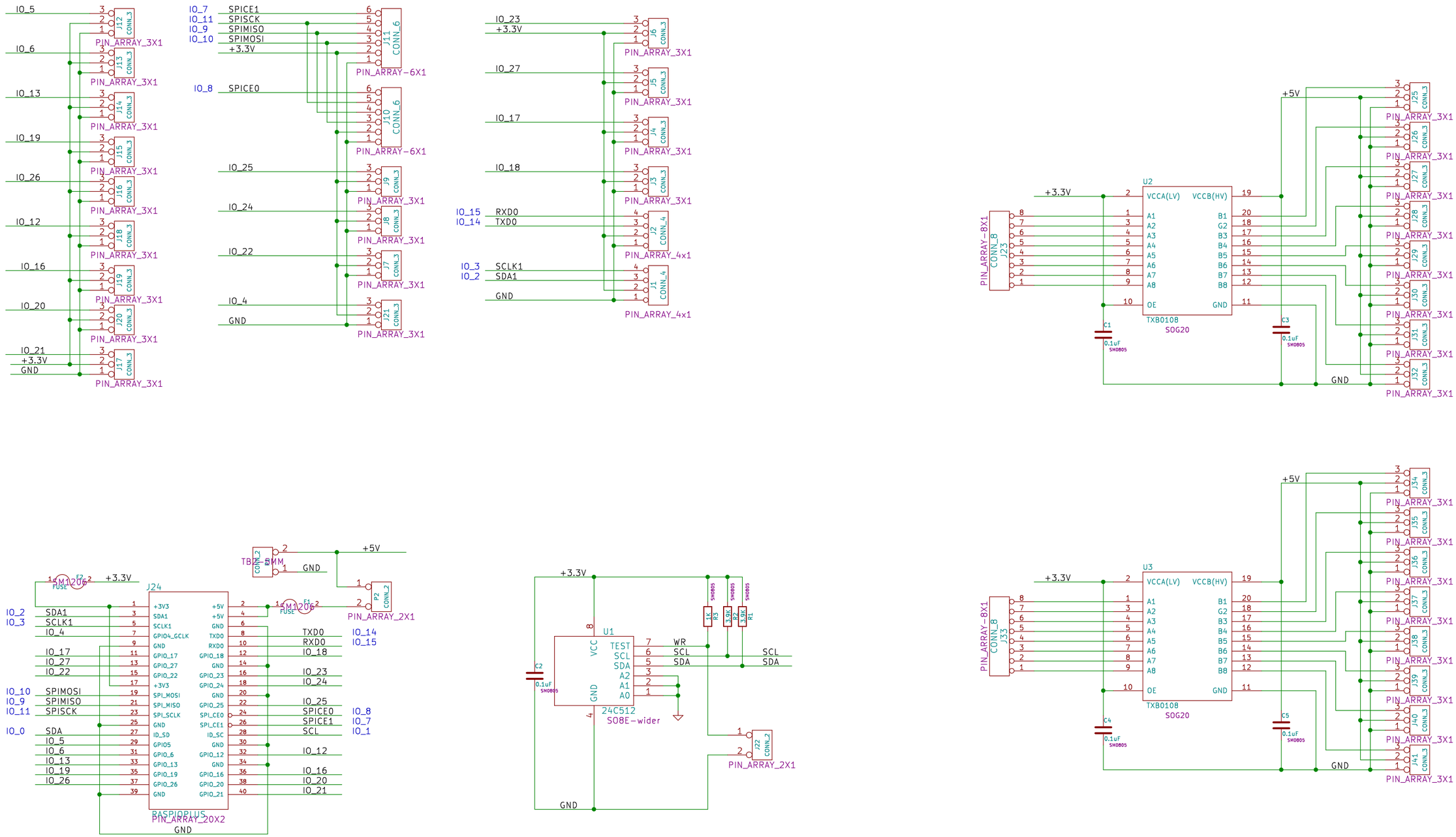

Sheet: /
File: RPP-UIO-16.sch

Title: RPP-UIO-16

Size: B	Date: 5 mar 2015	Rev: X1
KiCad E.D.A. kicad (5.0.2)-1		Id: 1/1