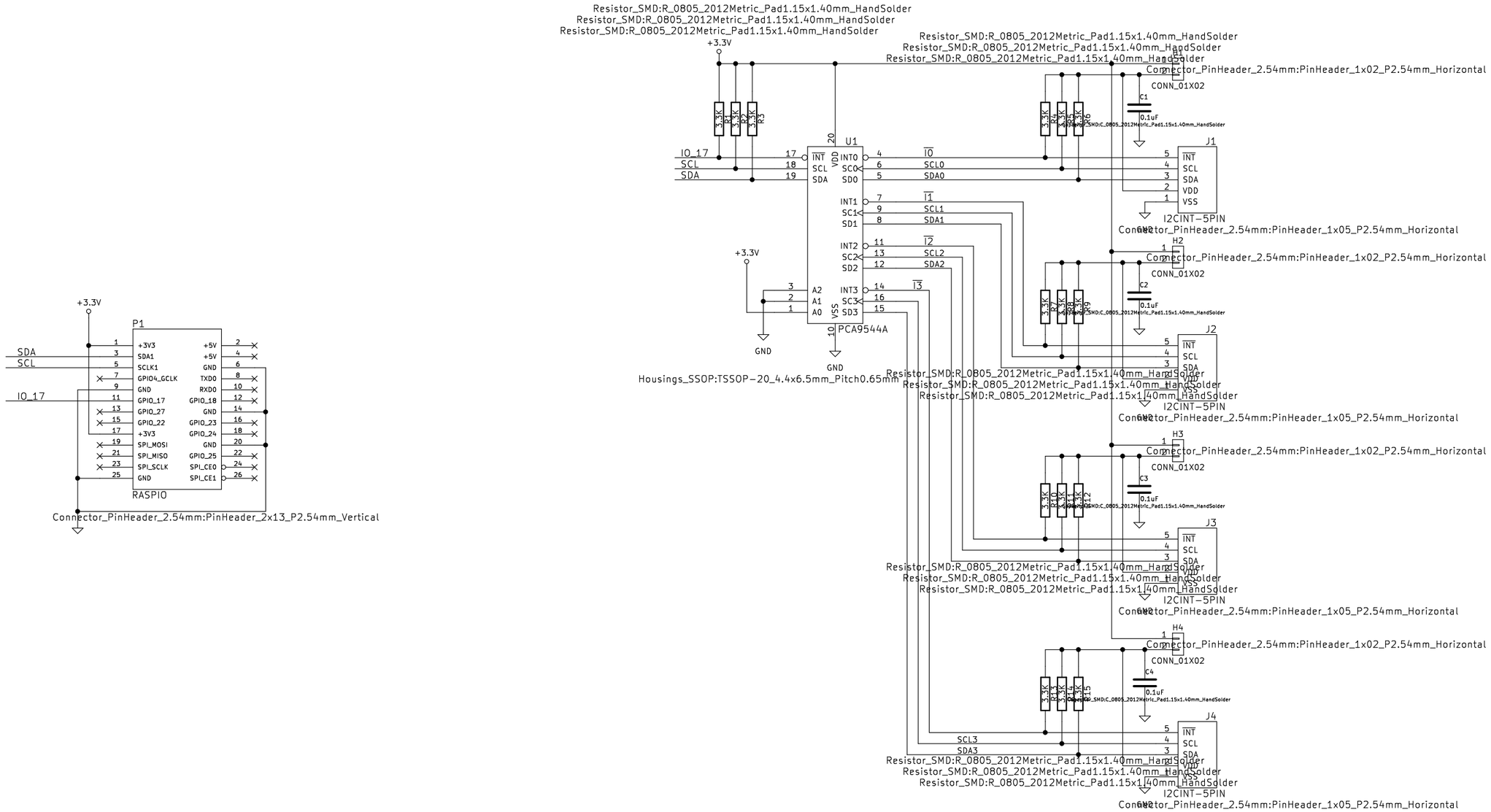

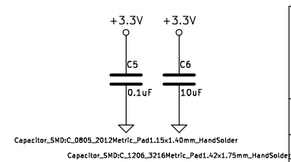

land-boards.com

Sheet: /

File: RPI-I2C-HUB.sch

Title: Raspberry Pi I2C Repeater

Size: B	Date: 2020-01-05	**Rev: X3**
KiCad E.D.A. kicad (5.0.2)-1		Id: 1/1