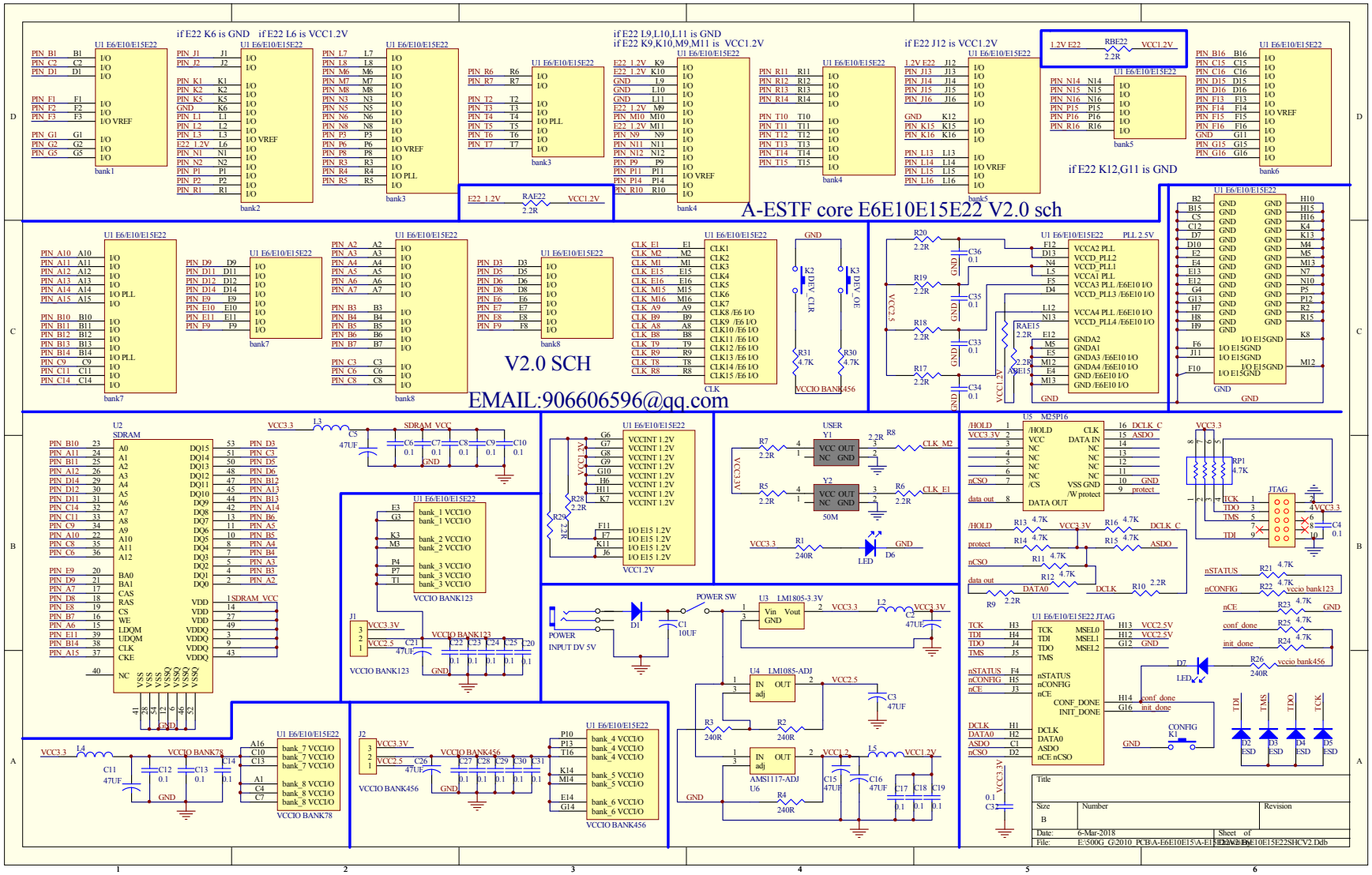
A-ESTF core E6E10E15E22 V2.0 sch
V2.0 SCH
EMAIL:906606596@qq.com
if E22 K6 is GND
if E22 L6 is VCC1.2V
if E22 L9,L10,L11 is GND
if E22 K9,K10,M9,M11 is VCC1.2V
if E22 J12 is VCC1.2V
if E22 K12,G11 is GND
U1 E6/E10/E15E22
U2 SDRAM
U5 M25P16
U3 LM1805-3.3V
U4 LM1085-ADJ
AMS1117-ADJ
POWER INPUT DV 5V
POWER SW
USER
JTAG
VCCIO BANK123
VCCIO BANK456
VCCIO BANK78
Title
Size
Number
Revision
Date: 6-Mar-2018
Sheet of
File: E:\500G G\2010 PCB\A-E6E10E15\A-E15E22V2.0\A-E6E10E15E22SHCV2.Ddb