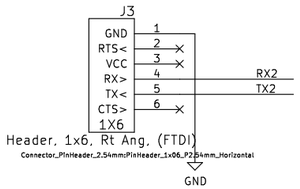

FTDI #2 CONNECTOR

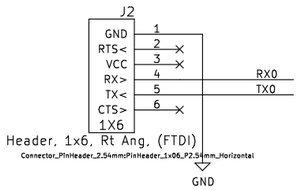

FTDI #1 CONNECTOR

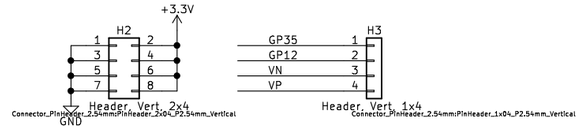

I/O CONNS

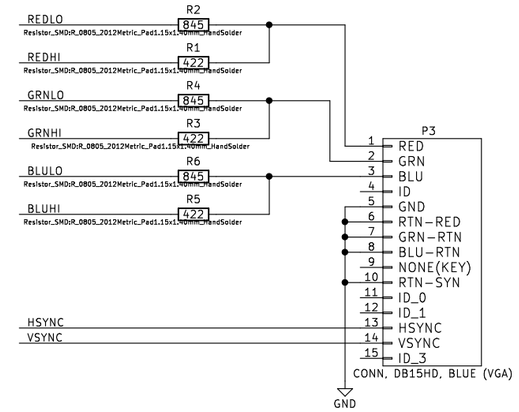

VGA (2:2:2)

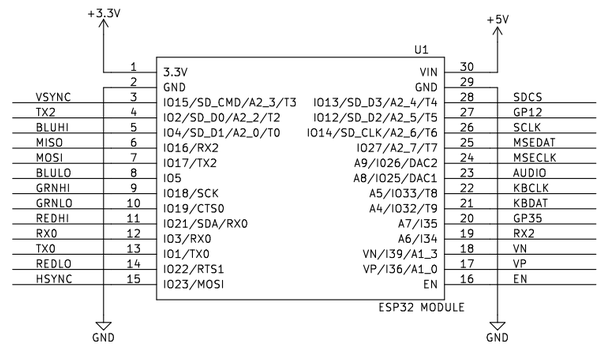

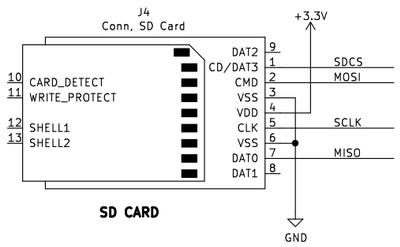

SD CARD

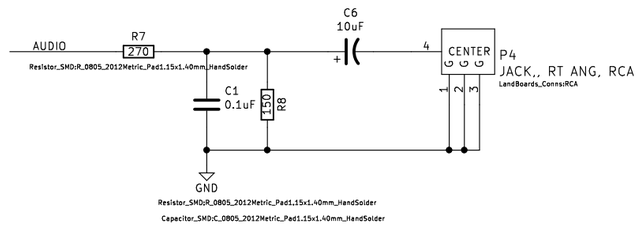

AUDIO

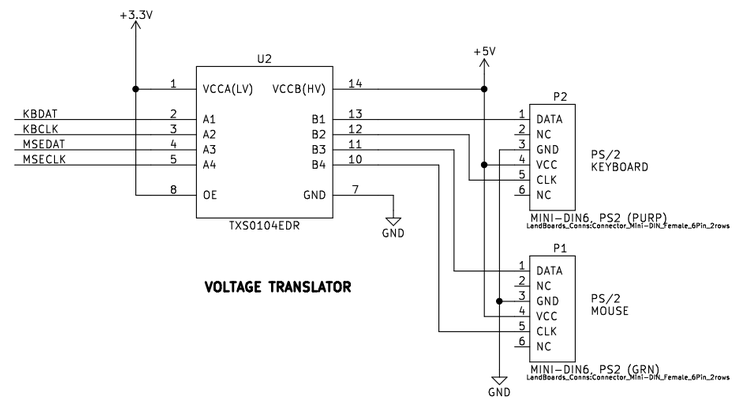

VOLTAGE TRANSLATOR

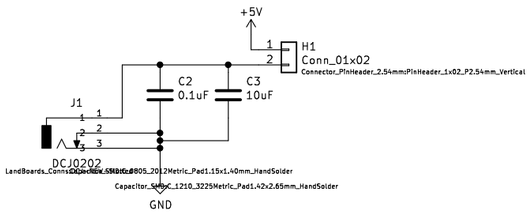

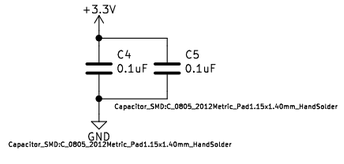

land-boards.com

Sheet: /
File: ESP32-VGA.sch

Title: ESP32-VGA

Size: B	Date: 2020-02-22	**Rev: 2**
KiCad E.D.A. kicad (5.1.5)-3		Id: 1/1