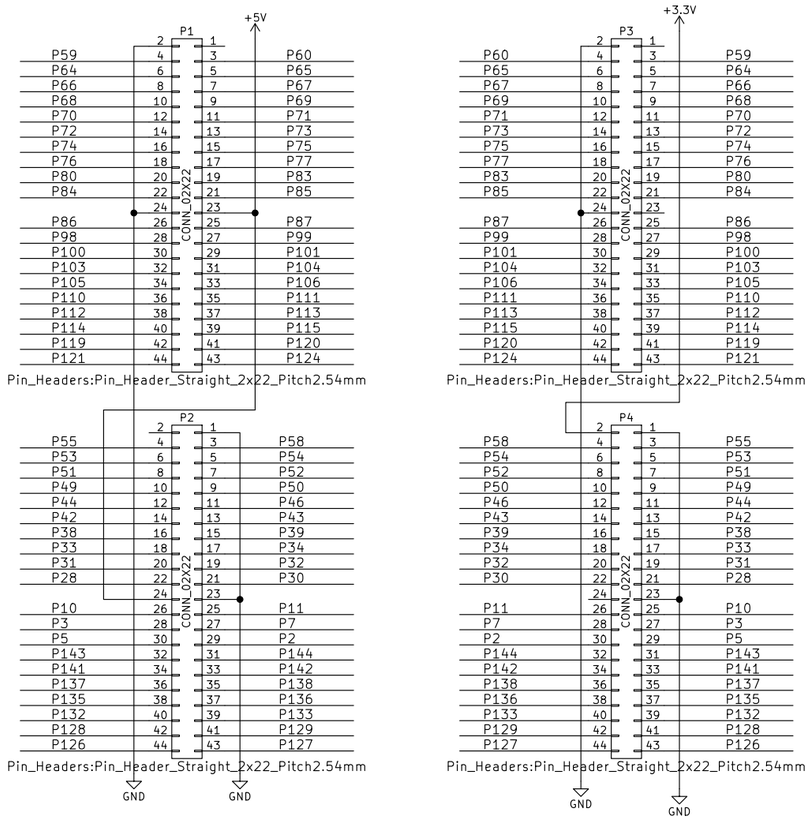

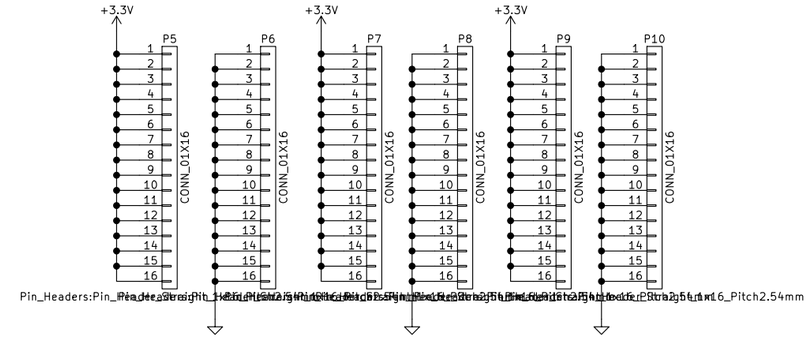

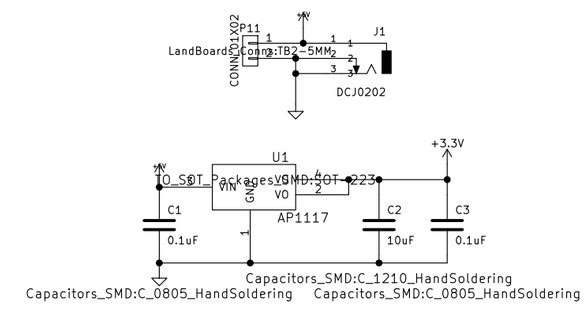

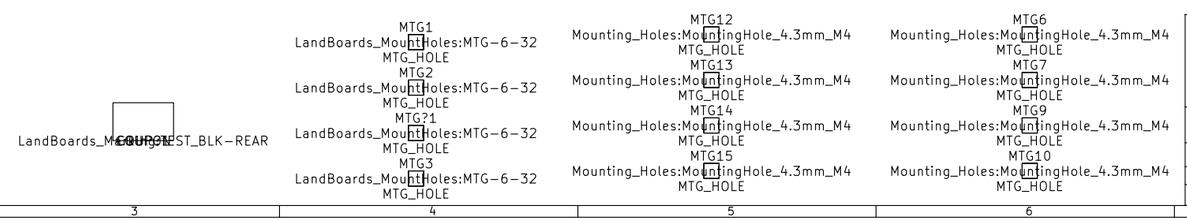

land-boards.com

Sheet: /
File: BASE-EP4CE6.sch

Title: FPGA Carrier

Size: B	Date: 2017-03-12	**Rev: X1**
KiCad E.D.A. kicad (5.0.2)-1		Id: 1/1