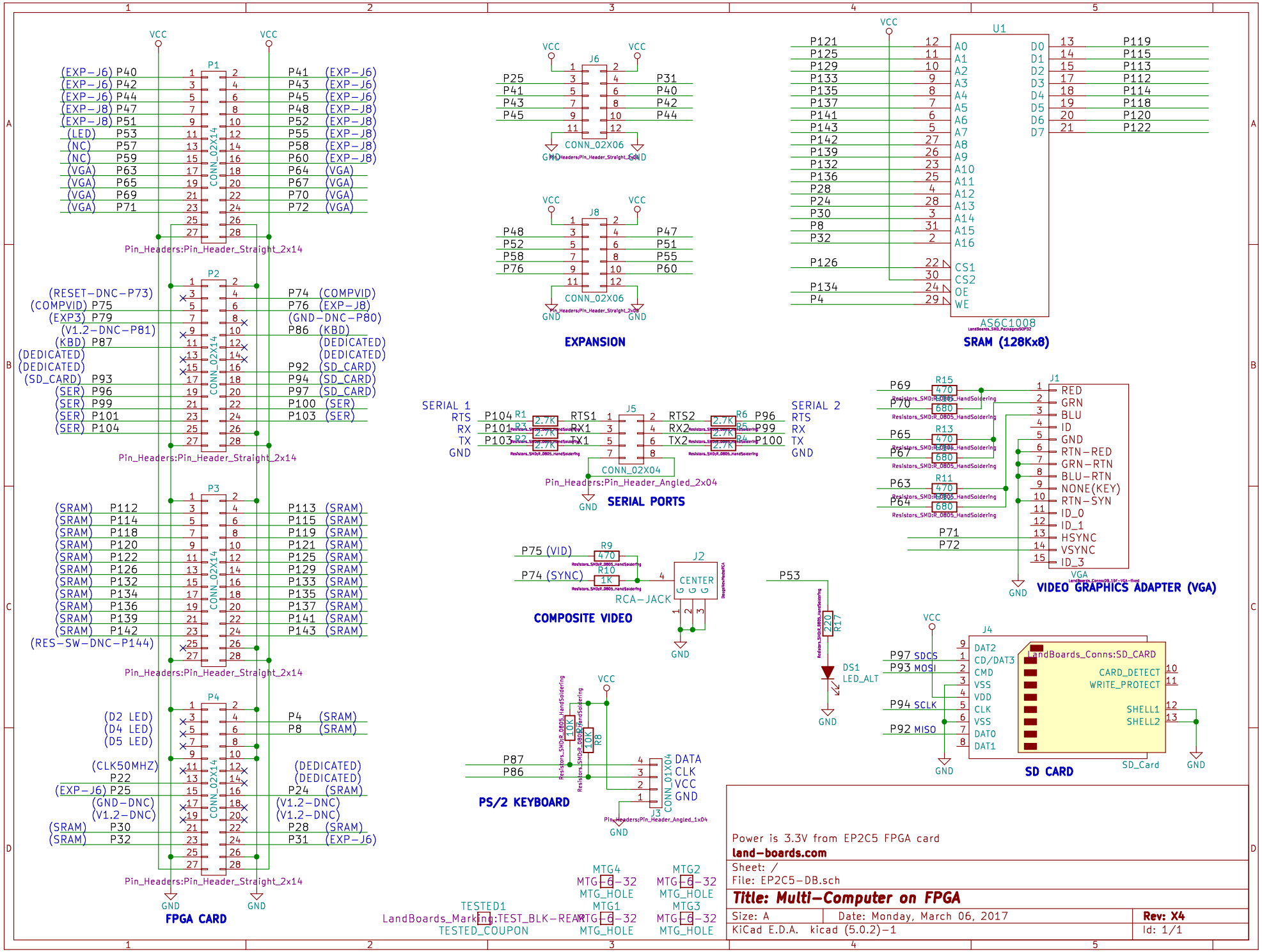
FPGA CARD
EXPANSION
SRAM (128Kx8)
SERIAL PORTS
VIDEO GRAPHICS ADAPTER (VGA)
COMPOSITE VIDEO
SD CARD
PS/2 KEYBOARD
Power is 3.3V from EP2C5 FPGA card
land-boards.com
Sheet: /
File: EP2C5-DB.sch
Title: Multi-Computer on FPGA
Size: A
Date: Monday, March 06, 2017
Rev: X4
KiCad E.D.A. kicad (5.0.2)-1
Id: 1/1