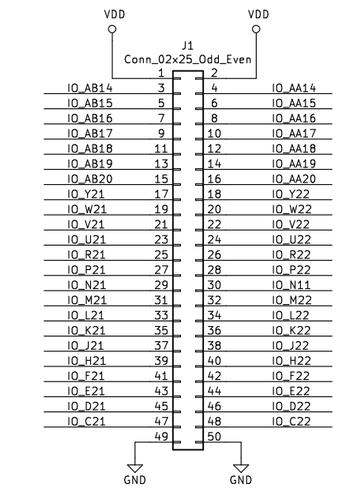

I/O CONN

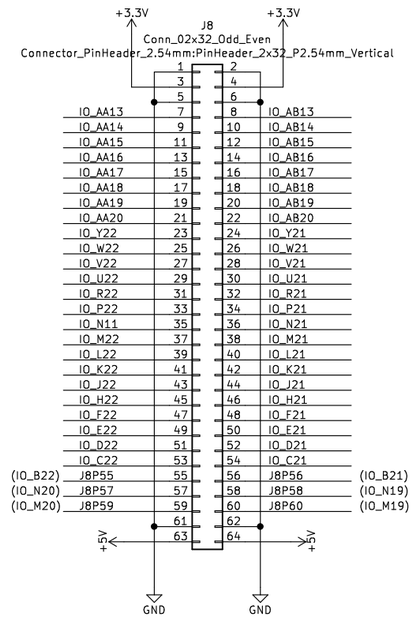

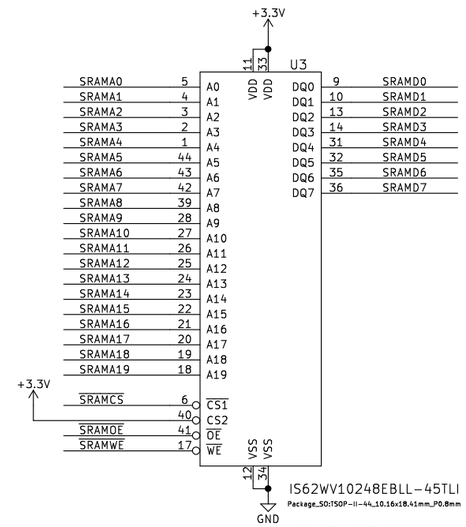

1MB SRAM

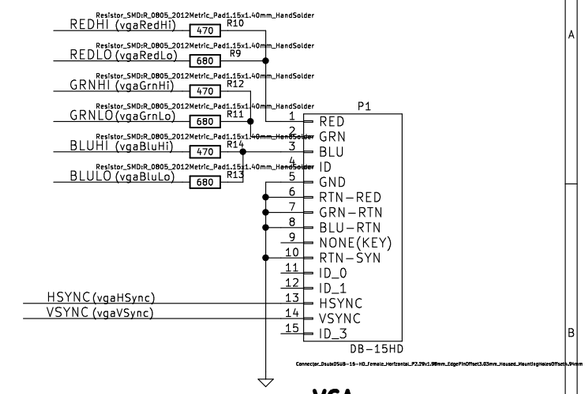

VGA

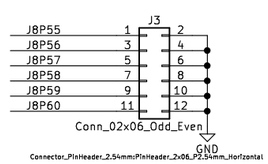

CONFIGURATION JUMPERS

FPGA CARD

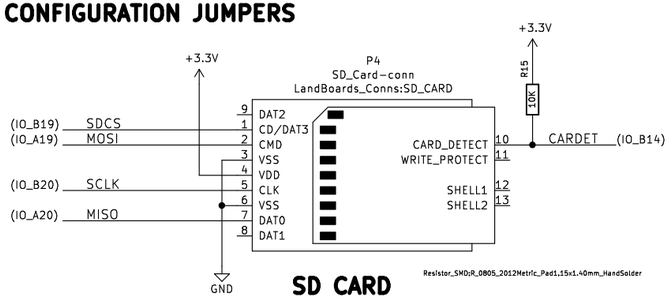

SD CARD

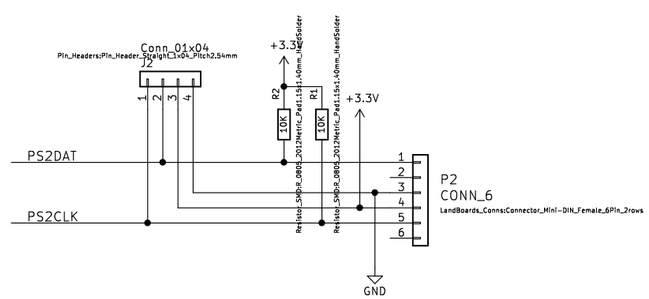

PS/2 KEYBOARD

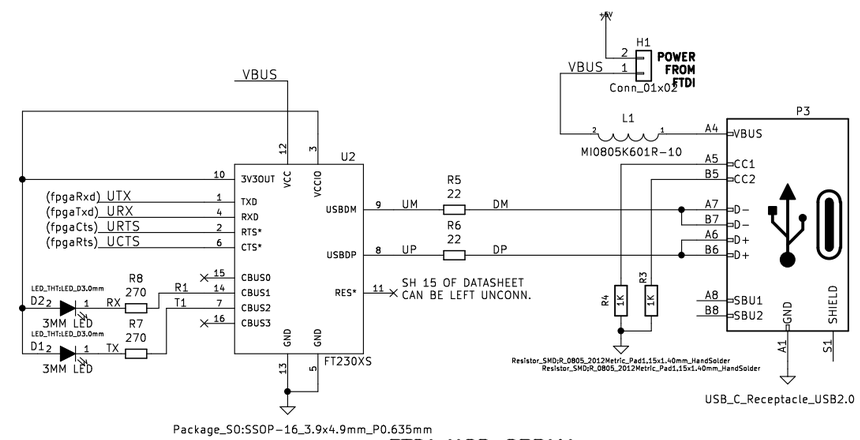

FTDI USB SERIAL

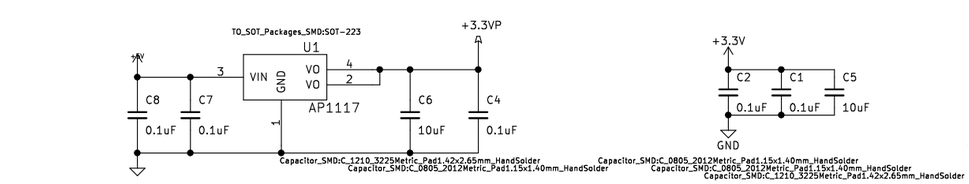

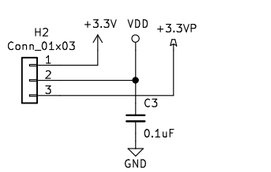

3.3V I/O SELECT

MTG1
LandBoards_MountHoles:MTG-6-32
MTG_HOLE
MTG2
LandBoards_MountHoles:MTG-6-32
MTG_HOLE
MTG?1
LandBoards_MountHoles:MTG-6-32
MTG_HOLE
MTG3
LandBoards_MountHoles:MTG-6-32
MTG_HOLE

FPGA CARD
land-boards.com
Sheet: /
File: RETRO-EP4CE15.sch

Title: RETRO-EP4CE15

Size: B	Date: 2020-01-02	**Rev: 1**
KiCad E.D.A. kicad (5.0.2)-1		Id: 1/1