BirdMesh-Health_edition

File: BirdMesh-Health_edition.kicad_sch

BirdMesh-Router_edition

File: BirdMesh-Router_edition.kicad_sch

HackClub FTW
Tomas Kuchta

Sheet: /
File: BirdMesh-Schematic.kicad_sch

Title:

Size: A4	Date:	**Rev:**
KiCad E.D.A. 9.0.7		Id: 1/3

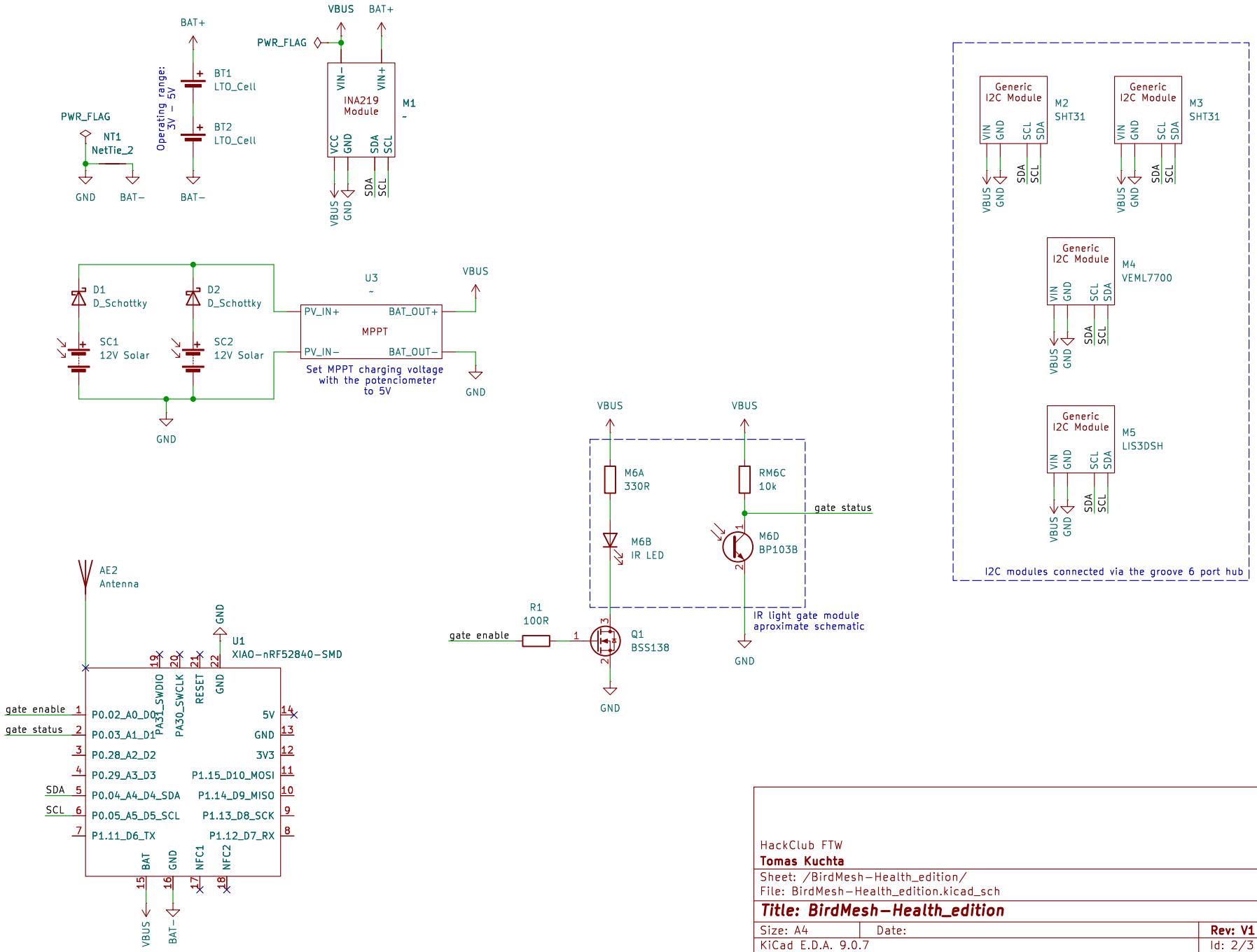

HackClub FTW

Tomas Kuchta

Sheet: /BirdMesh–Health_edition/

File: BirdMesh–Health_edition.kicad_sch

Title: BirdMesh–Health_edition

Size: A4	Date:	**Rev: V1**
KiCad E.D.A. 9.0.7		Id: 2/3

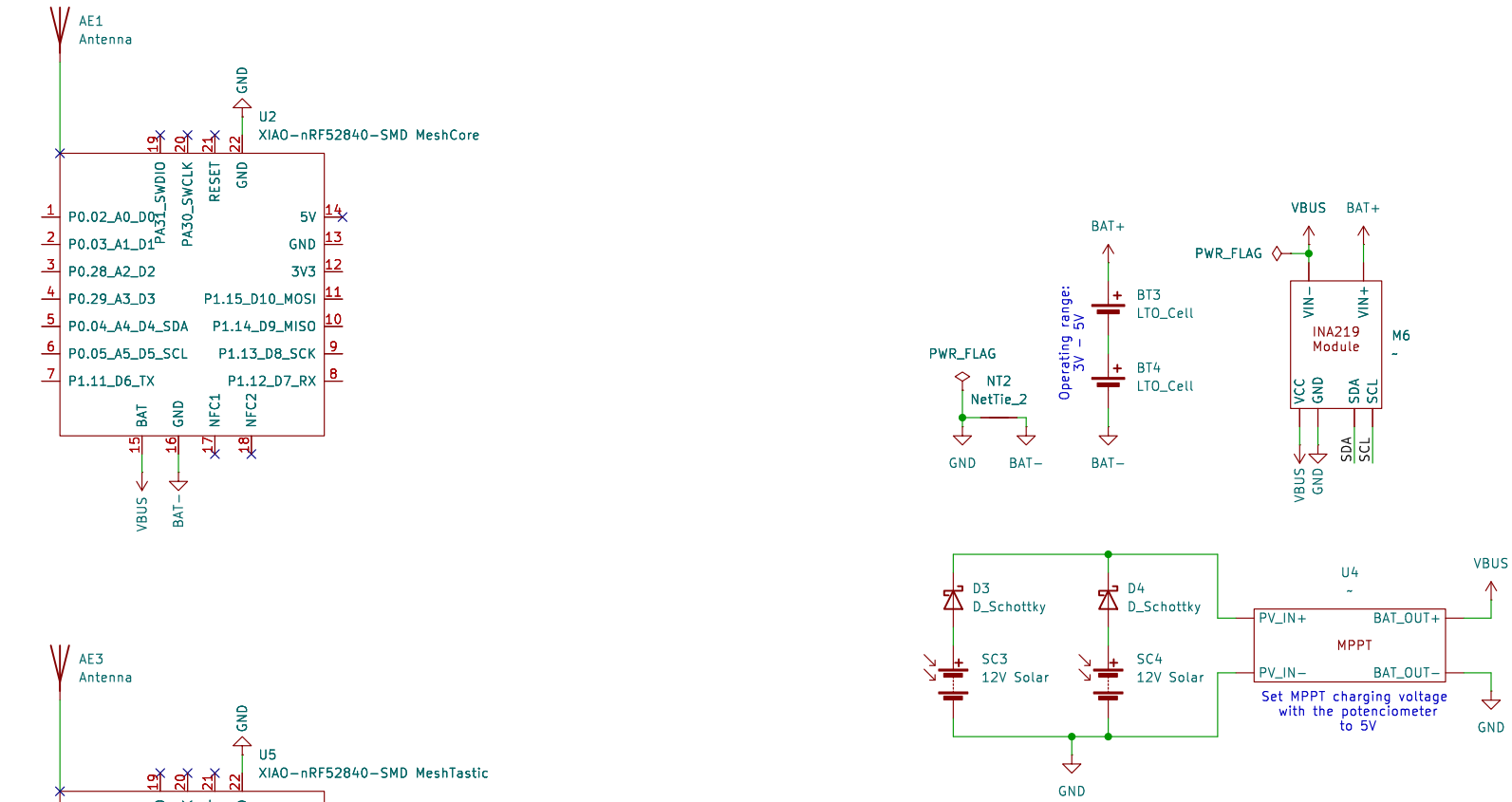

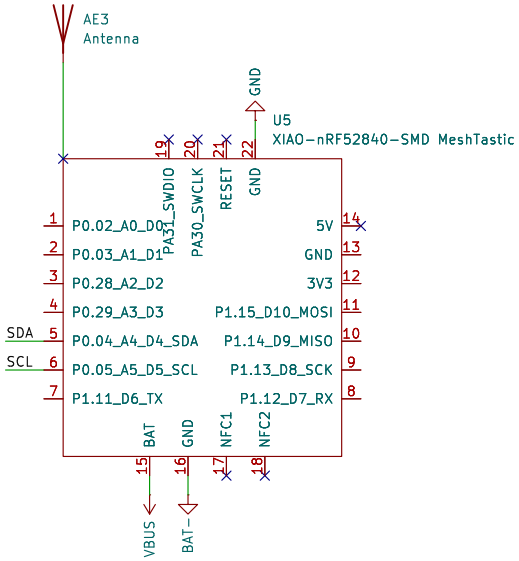

HackClub FTW
Tomas Kuchta

Sheet: /BirdMesh-Router_edition/
File: BirdMesh-Router_edition.kicad_sch

Title: BirdMesh-Router_edition

Size: A4	Date:	**Rev:**
KiCad E.D.A. 9.0.7		Id: 3/3