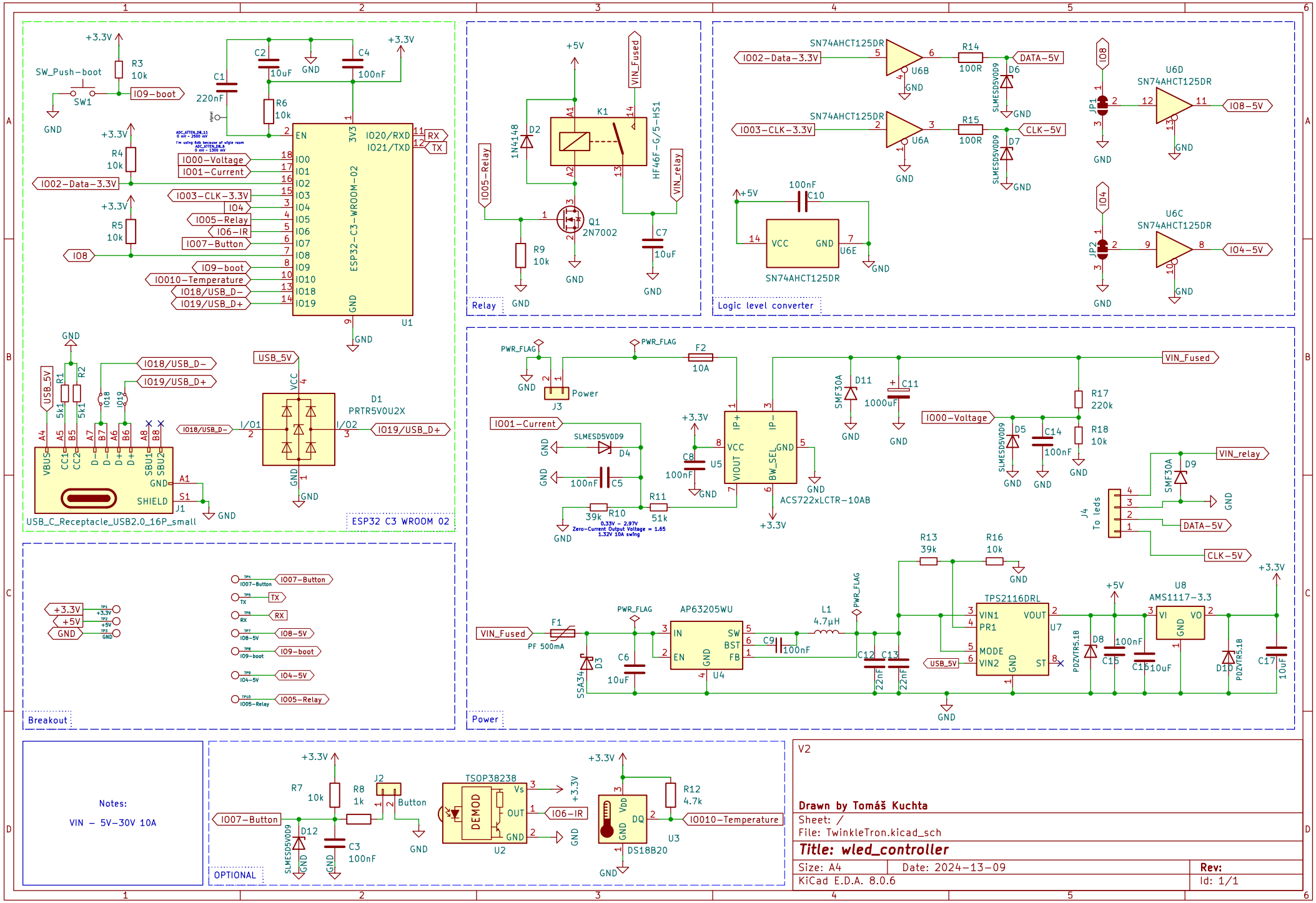
ESP32 C3 WROOM 02
ESP32-C3-WROOM-02
U1
USB_C_Receptacle_USB2.0_16P_small
J1
D1
PRTR5V0U2X
Relay
K1
HF46F-G/5-HS1
Q1
2N7002
Logic level converter
SN74AHCT125DR
U6B
U6A
U6E
U6D
U6C
Power
J3
F2
10A
U4
AP63205WU
U5
ACS722xLCTR-10AB
U7
TPS2116DRL
U8
AMS1117-3.3
F1
PF 500mA
L1
4.7µH
J4
To leds
Breakout
OPTIONAL
TSOP38238
DEMOD
U2
DS18B20
U3
J2
Button
Notes:
VIN – 5V–30V 10A
V2
Drawn by Tomáš Kuchta
Sheet: /
File: TwinkleTron.kicad_sch
Title: wled_controller
Size: A4
Date: 2024-13-09
Rev:
KiCad E.D.A. 8.0.6
Id: 1/1