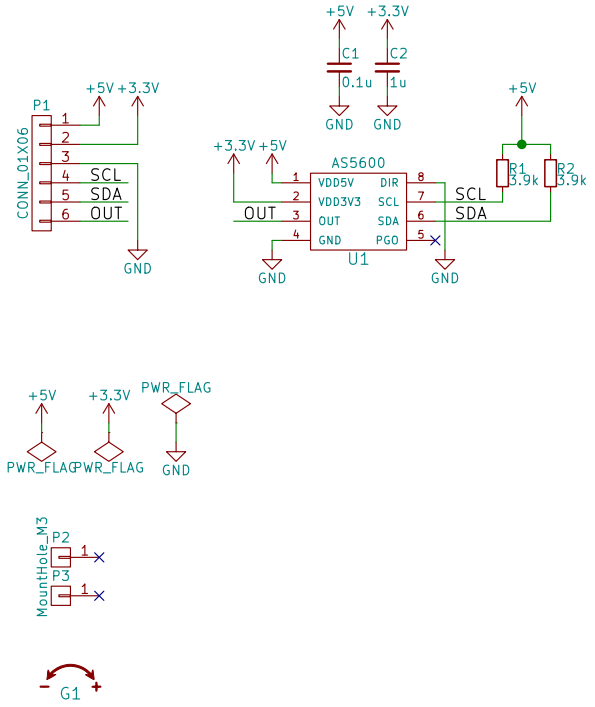

Sheet: /
File: AS5600_BreakoutBoard_V1_0.sch

Title:

Size: A4	Date:	**Rev:**
KiCad E.D.A. kicad 4.0.1-stable		Id: 1/1