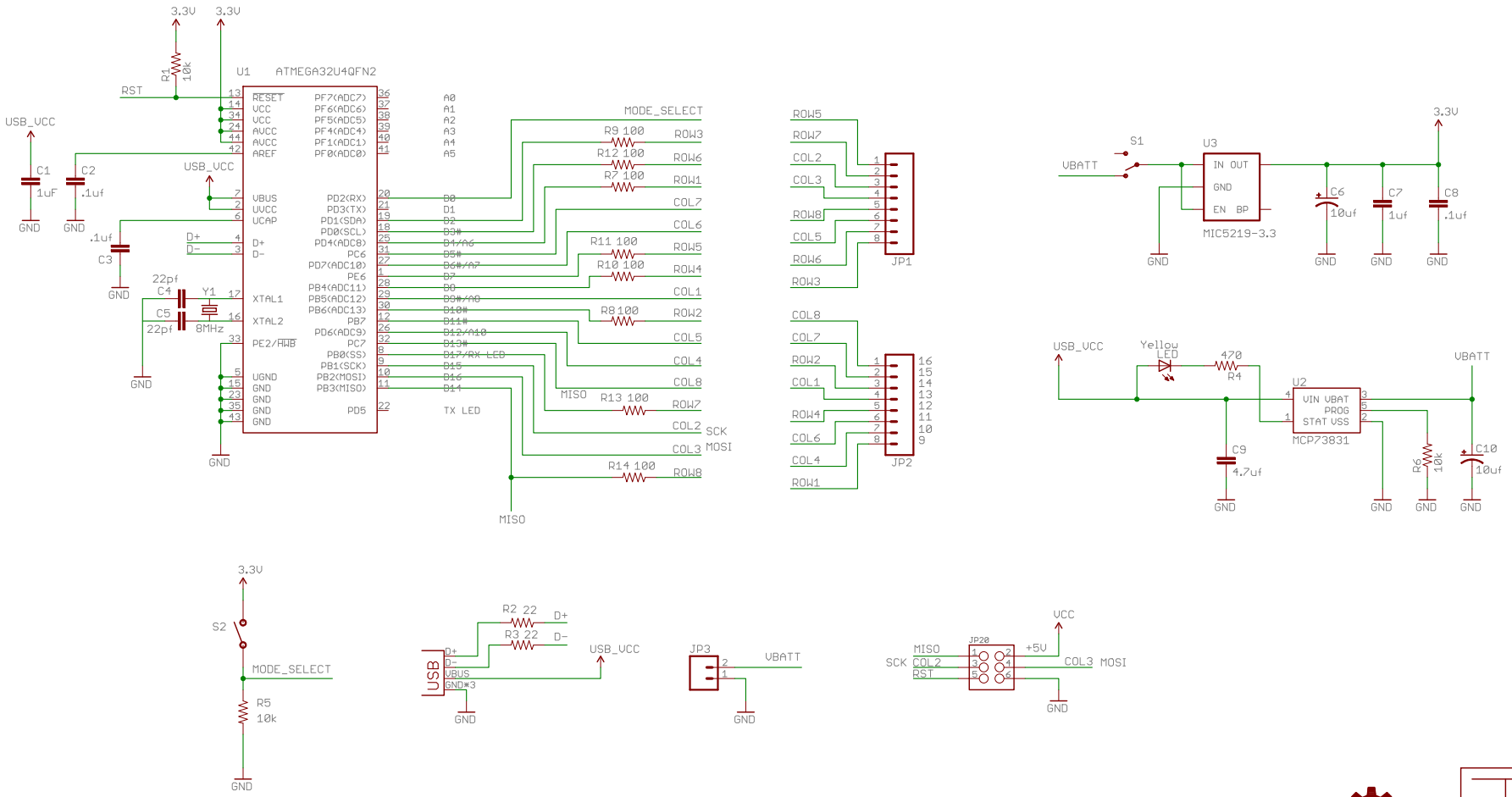

Based on the Pro Micro by Sparkfun Electronics

Released under the Creative Commons Attribution Share-Alike 3.0 License
http://creativecommons.org/licenses/by-sa/3.0

Milli_Matrix_v2	8/15/13
	tomflock.com
	Sheet: 1/1