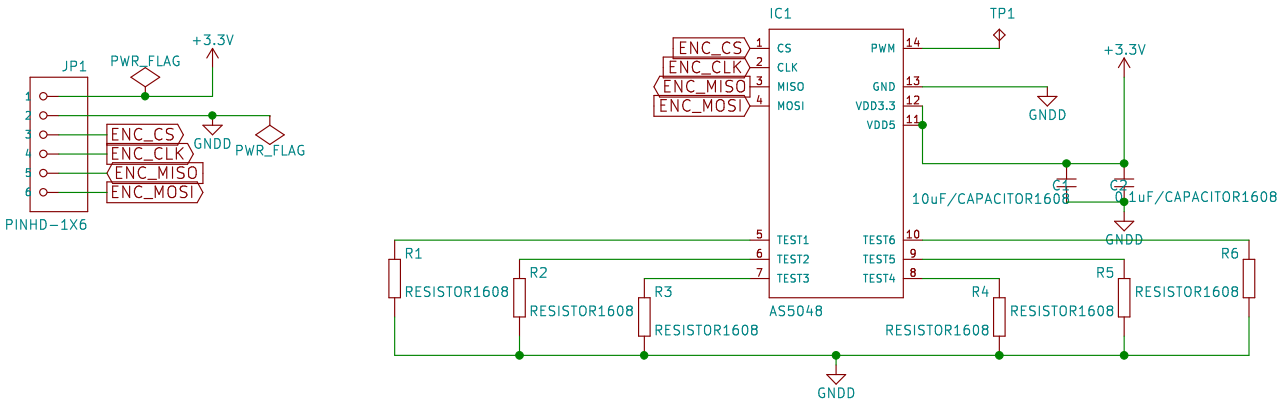

Crescent

Sheet: /

File: encoder.sch

Title: Encoder Board For AS5048A, AS5047D with SPI

Size: A4	Date: 2017-01-22	**Rev: V1.2**
KiCad E.D.A. kicad 4.0.1-stable		Id: 1/1