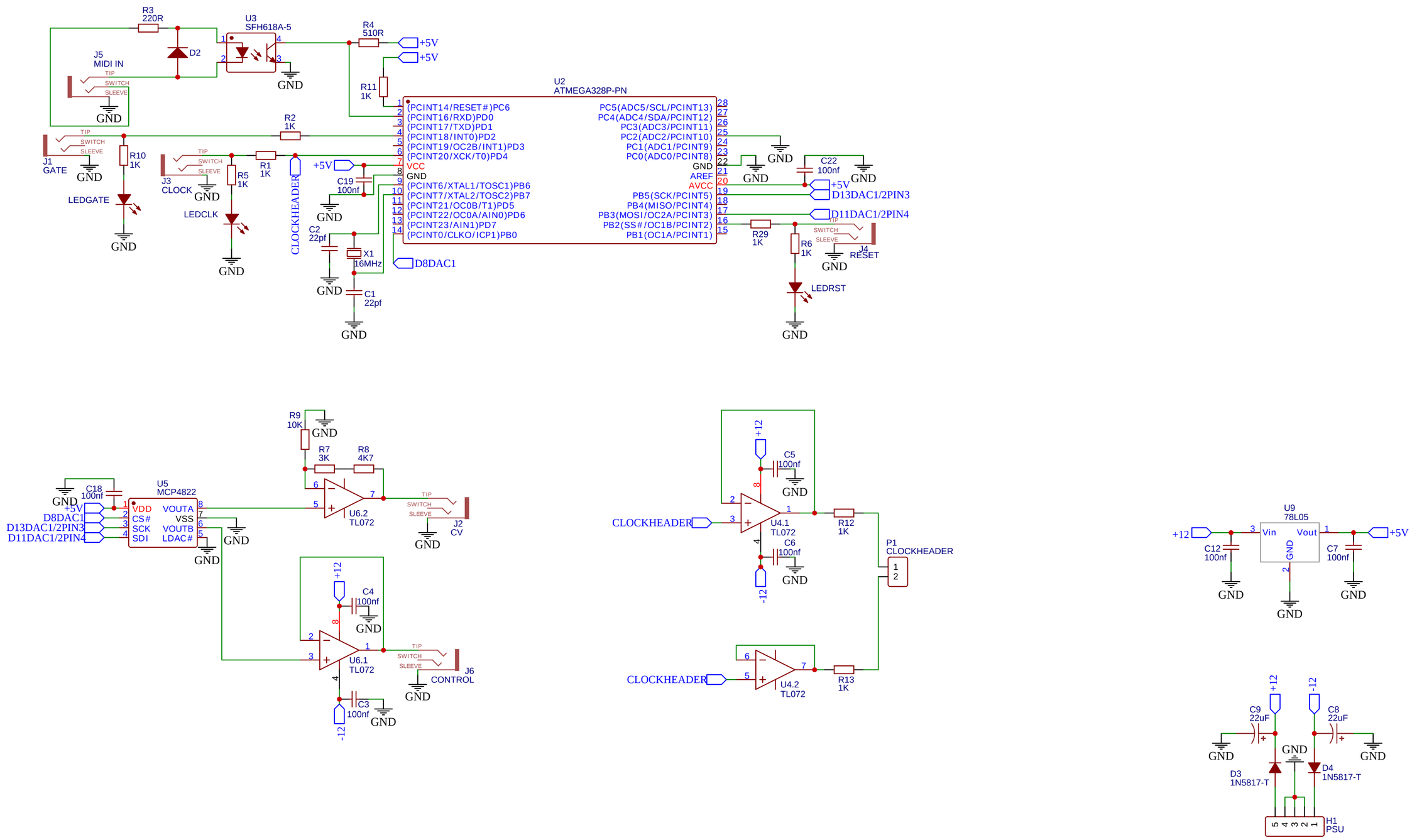

TITLE: MIDI2CV	REV: 1.2
EasyEDA — Company: AT1 Modular	Sheet: 1/1
Date: 2024-02-05 Drawn By: 1KnB	