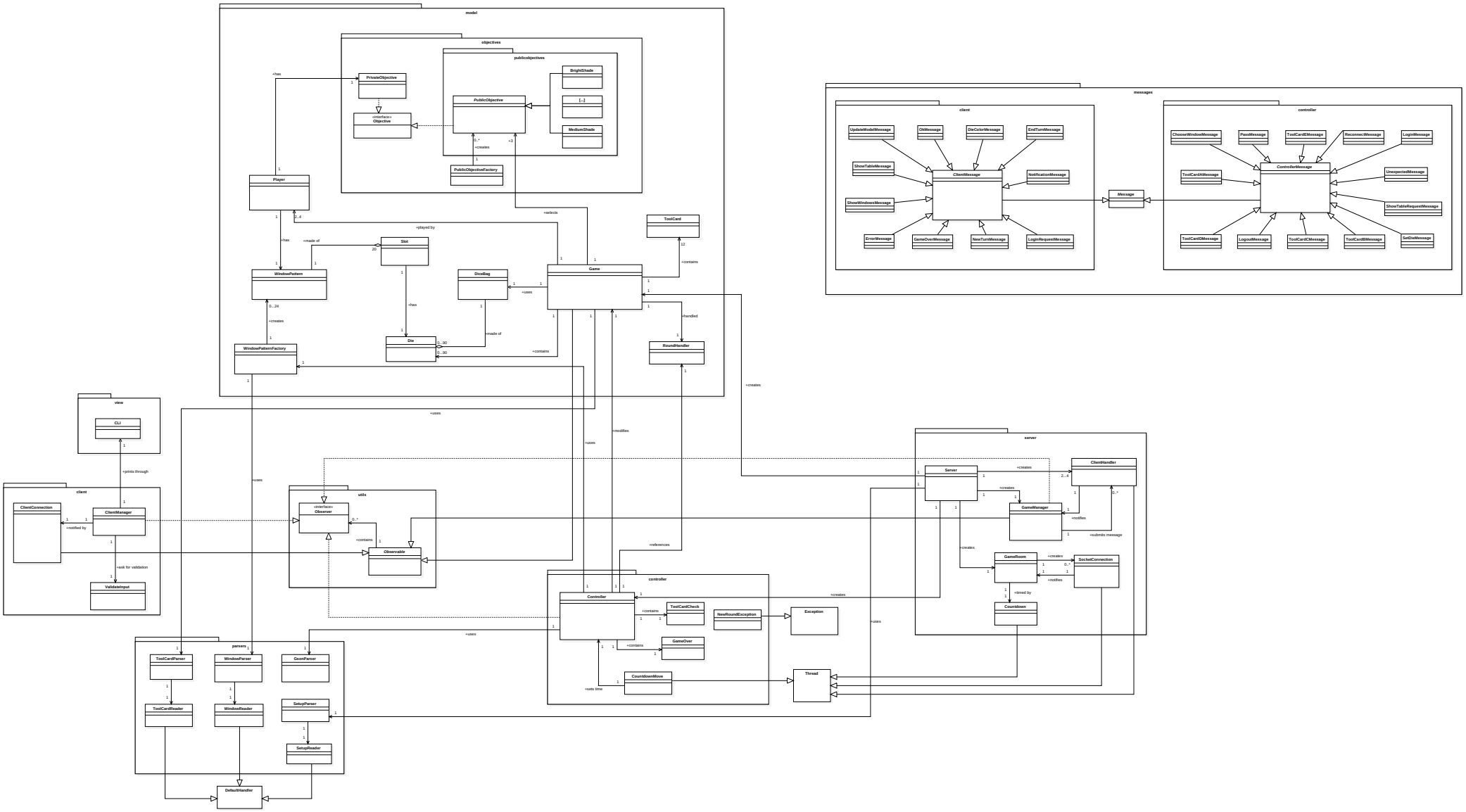
model
objectives
publicobjectives
PrivateObjective
«interface»
Objective
PublicObjective
BrightShade
[...]
MediumShade
PublicObjectiveFactory
Player
Slot
WindowPattern
DiceBag
Game
ToolCard
Die
WindowPatternFactory
RoundHandler
messages
client
UpdateModelMessage
OkMessage
DieColorMessage
EndTurnMessage
ShowTableMessage
ClientMessage
NotificationMessage
ShowWindowsMessage
ErrorMessage
GameOverMessage
NewTurnMessage
LoginRequestMessage
Message
controller
ChooseWindowMessage
PassMessage
ToolCardEMessage
ReconnectMessage
LoginMessage
ToolCardAMessage
ControllerMessage
UnexpectedMessage
ShowTableRequestMessage
ToolCardDMessage
LogoutMessage
ToolCardCMessage
ToolCardBMessage
SetDieMessage
view
CLI
client
ClientConnection
ClientManager
ValidateInput
utils
«interface»
Observer
Observable
server
Server
ClientHandler
GameManager
GameRoom
SocketConnection
Countdown
controller
Controller
ToolCardCheck
NewRoundException
Exception
GameOver
CountdownMove
Thread
parsers
ToolCardParser
WindowParser
GoalParser
ToolCardReader
WindowReader
SetupParser
SetupReader
DefaultHandler
+has
+played by
+made of
+selects
+contains
+uses
+handled
+creates
+prints through
+notified by
+ask for validation
+modifies
+references
+submits message
+timed by
+sets time