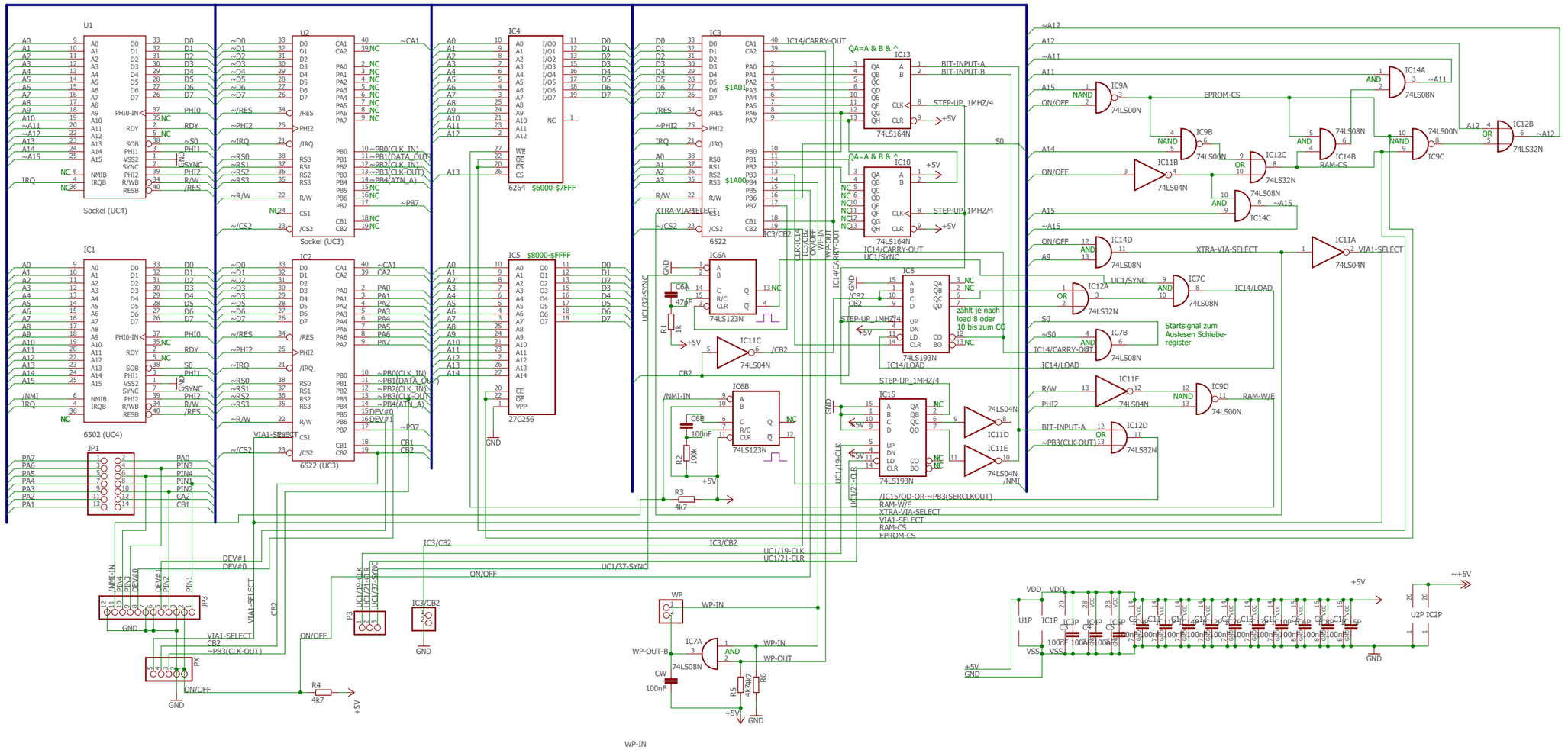

The Phantom System
revised 01/2022 by Thomas Linke
aka Tommi_nrw

TITLE: The Phantom System_Evolution V1.1_main	
Document Number:	REV:
Date: 21.03.2022 18:56	Sheet: 1/1