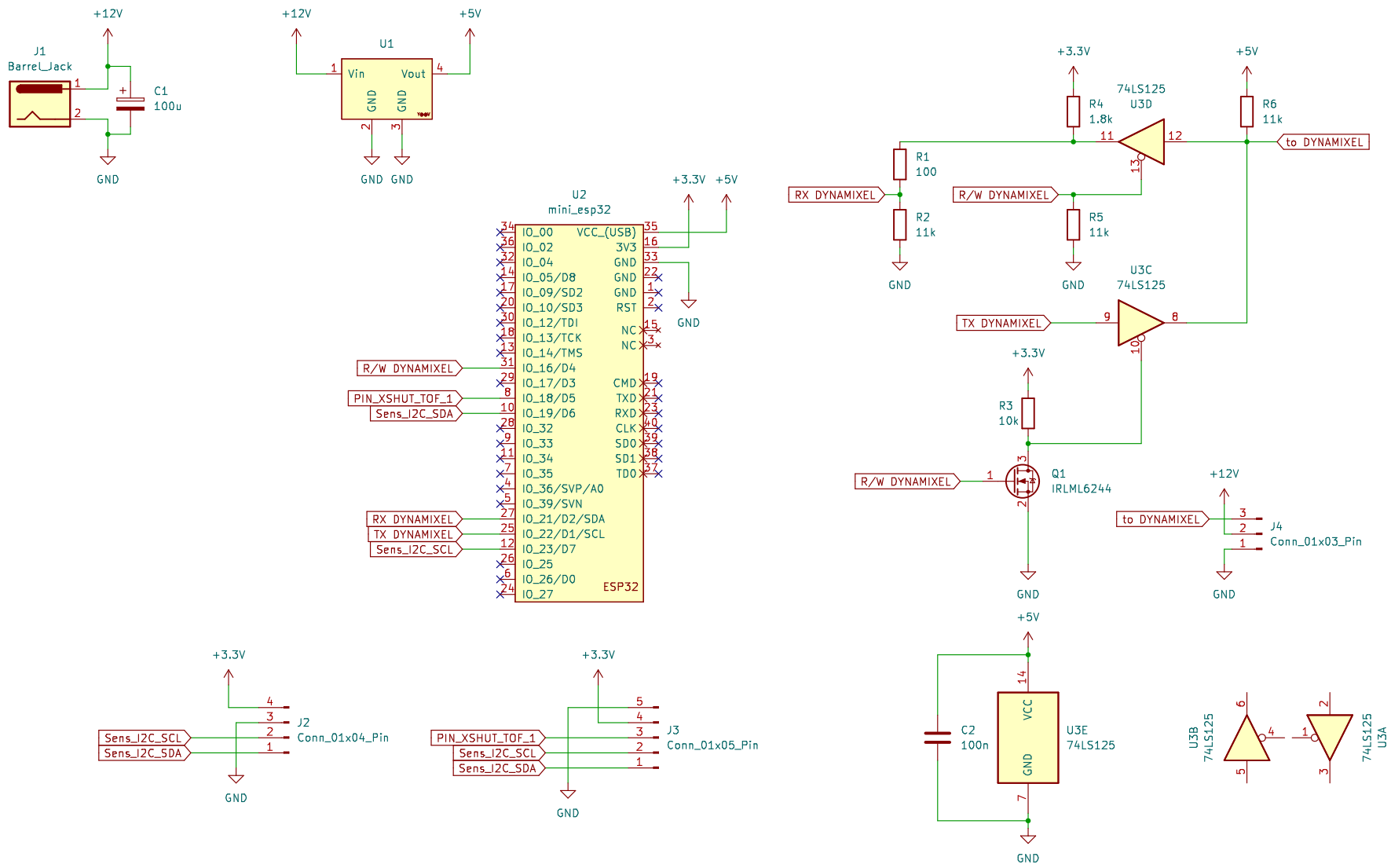

Sheet: /
File: RoboticKraftAufFläche.kicad_sch

Title:

Size: A4	Date:	Rev:
KiCad E.D.A. kicad 7.0.10		Id: 1/1