ZYNQ7000 FPGA Development Board AX7015B User Manual

Version Record

Version	Modification Record
REV1.0	First Release
REV1.1	Add instructions for fiber optic interface screen printing OPT1 and OPT2

Table of Contents

Version Record....2
1. FPGA Development Board Introduction....5
2. AC7015B SoM Board....8
2.1 Introduction....8
2.2 ZYNQ Chip....10
2.3 DDR3 DRAM....12
2.4 QSPI Flash....15
2.5 eMMC Flash....16
2.6 Clock configuration....17
2.7 USB to Serial Port....19
2.8 LED Light....20
2.9 Reset Button....21
2.10 JTAG Interface....22
2.11 DIP switch configuration....22
2.12 Power Supply....23
2.13 Structure diagram....25
2.14 Connector Pin Definition....25
3. Extension Board....31
3.1 Introduction....31
3.2 Gigabit Ethernet interface....31
3.3 USB 2.0 Host Interface....34
3.4 HDMI Output Interface....35
3.5 HDMI Input Interface....37
3.6 SFP Interface....39
3.7 PCIe x2 Interface....41
3.8 USB to Serial Port....42
3.9 SD Card Slot....43
3.10 JTAG Interface....44
3.11 LED Light....45
3.12 User Button....46
3.13 Expansion Port....47
3.14 Power Supply....48
3.15 Expansion Board Structure diagram....49

Alinx Electronic Technology (Shanghai) Co., Ltd. has officially released the development board (model: AX7015B) based on the XILINX ZYNQ7000 development platform in 2018. In order to provide you with a quick understanding of this development platform, we have compiled this user manual.

ZYNQ7000 FPGA development platform adopts the core board + expansion board mode, which is convenient for users to use the core board for secondary development. The core board uses XILINX's Zynq7000 SOC chip XC7Z015 solution, which combines dual-core ARM Cortex-A9 and FPGA programmable logic on a single chip using ARM+FPGA SOC technology. In addition, the core board contains 2 pieces of 1GB high-speed DDR3 SDRAM chip, 1-piece 8GB eMMC memory chip and 1-piece 256Mb QSPI FLASH chip.

In the design of the expansion board, it expands the rich peripheral interfaces, such as 1- port PCIex2 interface, 2-port optical interfaces, 2-port Gigabit Ethernet interfaces, 4-port USB2.0 HOST interfaces, 1-port HDMI input interface, 1-port HDMI output interface, 1-port UART serial port interface, 1 SD card interface, a 40-pin expansion interface, etc. It meets users' requirements for high-speed data exchange, data storage, video transmission processing and industrial control. It is a "professional" ZYNQ development platform. It is applied to high-speed data transmission and exchange, pre-validation and post-application of data processing. This product is very suitable for students, engineers and other groups engaged in ZYNQ development.

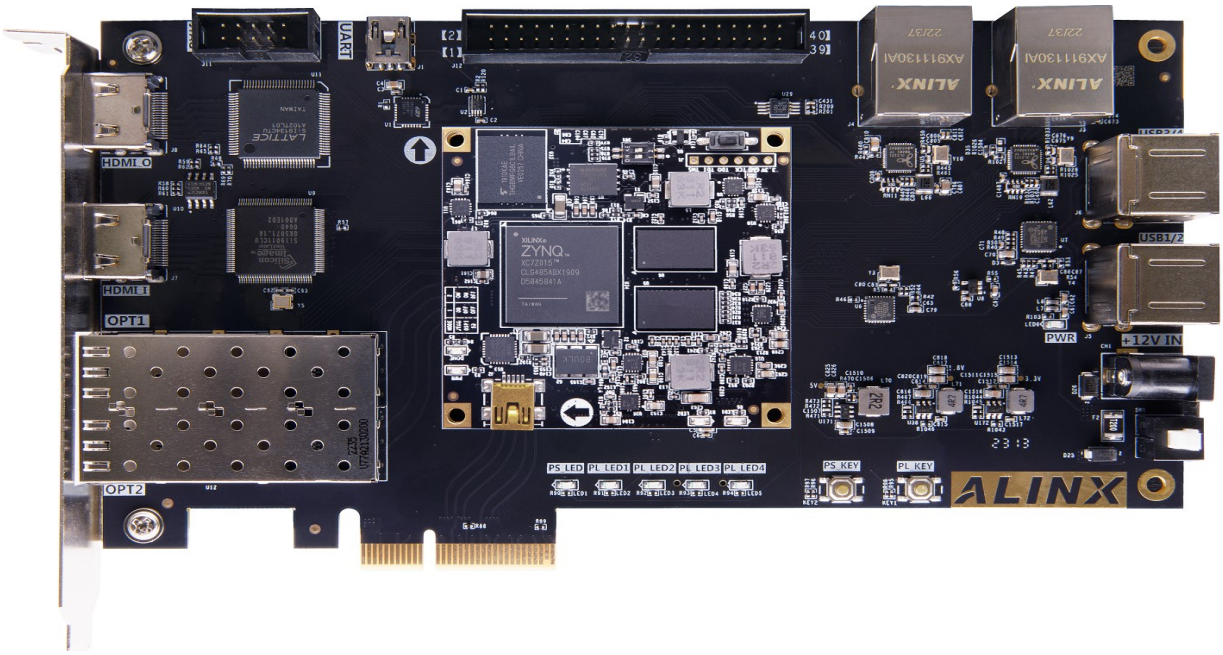

1. FPGA Development Board Introduction

Here, a brief introduction to the AX7015B ZYNQ FPGA development platform.

The entire structure of the development board, the core board + expansion board mode design. A high-speed inter-board connector is used between the core board and the expansion board.

The core board is mainly composed of the minimum system of ZYNQ7015 + 2 DDR3 + eMMC + QSPI FLASH. It undertakes the high-speed data processing and storage function of the ZYNQ system. The data width between the ZYNQ7015 and the two DDR3s is 32 bits, and the two DDR3 capacities up to 1GB. The 8GB eMMC FLASH memory chip and 256Mb QSPI FLASH are used to statically store the ZYNQ operating system, file system and user data. Users can select different startup modes through the DIP switch on the core board. The ZYNQ7015 uses Xilinx's Zynq7000 series of chips, model number XC7Z015-2CLG485. The ZYNQ7020 chip can be divided into processor system part Processor System (PS) and programmable logic part Programmable Logic (PL).

The expansion board expands the rich peripheral interface for the core board, including 1-port PCIex2 interface, 2-port optical interfaces, 2-port Gigabit Ethernet interfaces, 4-port USB2.0 HOST interfaces, 1-port HDMI input interface, 1-port HDMI output interface, 1-port UART serial port interface, 1-port SD card interface, 1-port 40-pin expansion header and some button LEDs.

Figure 1-1-1 is the block diagram of the FPGA development board AX7015B:

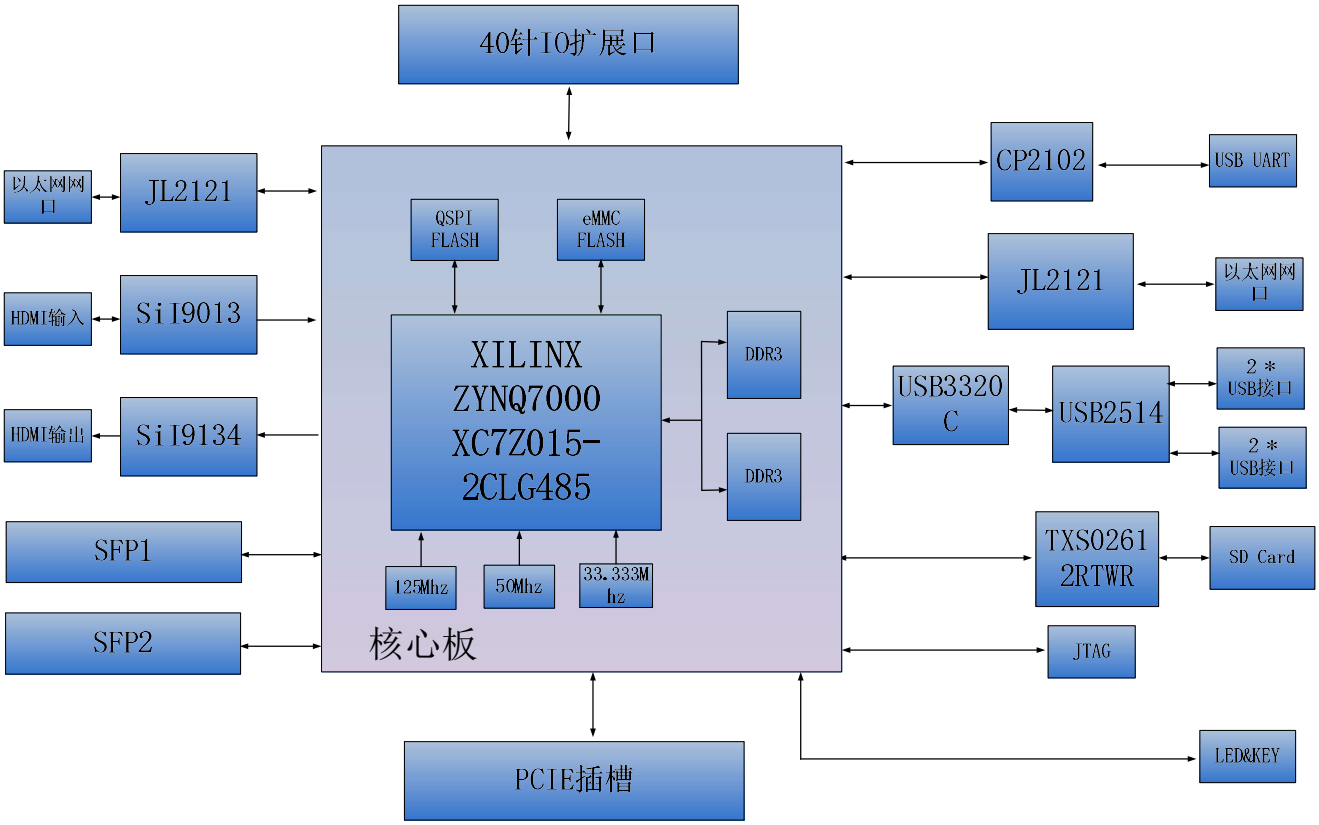

Figure 1-1-1: The block diagram of AX7015B

The interfaces and features included in the development board:

- ZYNQ7000 SoM Board

  Composed of XC7Z015+1GB DDR3+8GB eMMC FLASH+256Mb QSPI FLASH, there are also two crystal oscillators providing clocks, one is 33.3333MHz for PS system, the other is 50MHz for PL logic, one is GTP differential reference clock, with a frequency of 125Mhz.
- 1-port PCIe x2 Interface

  Supports the PCI Express 2.0 standard and provides a standard PCIe x2 high-speed data transmission interface, with a single channel communication rate of up to 5GBaud.
- 2-port SFP Optical Interface

  2-channels high-speed transceivers of ZYNQ's GTP transceiver are connected to two optical modules for transmission and reception, achieving two high-speed fiber optic communication interfaces. The receiving and sending speed of each fiber optic data communication channel can reach up to 6.25Gb/s.

- Gigabit Ethernet Interface

  2 channels 10/100M/1000M Ethernet RJ45 interfaces are used for Ethernet data exchange with computers or other network devices. The network interface chip adopts the JL2121 industrial grade GPHY chip from Jinglue Company. One Ethernet is connected to the PS end of the ZYNQ chip, and one Ethernet is connected to the PL end of the ZYNQ chip.
- HDMI Video Output

  1-channel HDMI video out interface, selected Silion Image's SIL9134 HDMI encoding chip, supports up to 1080P@60Hz output, support 3D output.
- HDMI Video Input

  1-channel HDMI video input interface, selected Silion Image's SIL9013 HDMI decoder chip, supports up to 1080P@60Hz input, supports data input in different formats.
- USB2.0 HOST Interface

  The USB Hub chip is used to extend the 4-way USB HOST interface. The 4- way USB HOST interface is used to connect external USB slave devices, such as mouse, keyboard, USB flash drive, etc. The USB interface uses a flat USB interface (USB Type A).
- USB Uart Interface

  2-channel Uart to USB interfaces for communication with a computer, facilitating user debugging. 1-channel is on the core board, works independently. 1-channel Uart to USB interface on the carrier board, used for debugging the entire board. The serial port chip adopts Silicon Labs CP2102GM's USB-UAR chip, and the USB interface adopts MINI USB interface.
- Micro SD Socket

  1-port Micro SD socket used for storing operating system images and file systems.
- 40-pin Expansion Header

  The 40-pin 2.54mm pitch expansion port use for external ALINX modules (binocular camera, TFT LCD screen, high-speed AD module, etc.). The expansion port includes 1 channel of 5V power supply, 2 channels of 3.3V power supply, 3 channels of ground, and 34 channels of IO port.
- USB JTAG Interface

The 10-pin 2.54mm standard JTAG port used for downloading and debugging of FPGA programs. Users can debug and download the ZYNQ system through the XILINX Downloader.

- LED Light

  10 LEDs, including 4 on the core board and 6 on the extension board. There are 1 power indicator, 1 DONE configuration indicator, 2 user indicators on the core board. There are 1 power indicator and 5 user indicators on the extension board.
- Button

  3 buttons,1 reset button on the core board, and 2 user buttons on the carrier board.

2. AC7015B SoM Board

2.1 Introduction

The AC7015B (core board model, the same below) core board is an FPGA development board based on the ZynQ chip XC7Z015-2CLG485I of the XILINX ZYNQ7000 series. The ZYNQ chip's PS system integrates two ARM CortexTM-A9 processors, AMBA® interconnects, internal memory, external memory interfaces and peripherals. The ZYNQ FPGA chip contains a wide range of programmable logic cells, DSP and internal RAM.

The core board uses two SK Hynix DDR3 chips (H5TQ4G63AFR-PBI), each with a DDR capacity of 4Gbit; two DDR chips form a 32-bit data bus width, and the read and write data clock frequency between ZYNQ FPGA and DDR3 is up to 533Mhz; such a configuration can meet the system's high bandwidth data processing needs.

To connect to the expansion board, the four board-to-board connectors of the core board extend the USB interface of the PS side, the Gigabit Ethernet interface, the SD card interface and other remaining MIO ports. Extend ZynQ's 4- pair high-speed transceiver GTP interface. Almost all IO ports (84) of BANK13,BAN34 and BANK35 on the PL side, the level of IO of BANK35 can be modified by replacing the LDO chip on the core board to meet the requirements of users with different level interfaces. For users who need a lot of IOs, this core board will be a good choice. Moreover, the IOs connection part, the routing between the ZYNQ FPGA chip and the interface is

equal length and differential processing. The core board size is only 60*60 (mm), which is very suitable for secondary development.

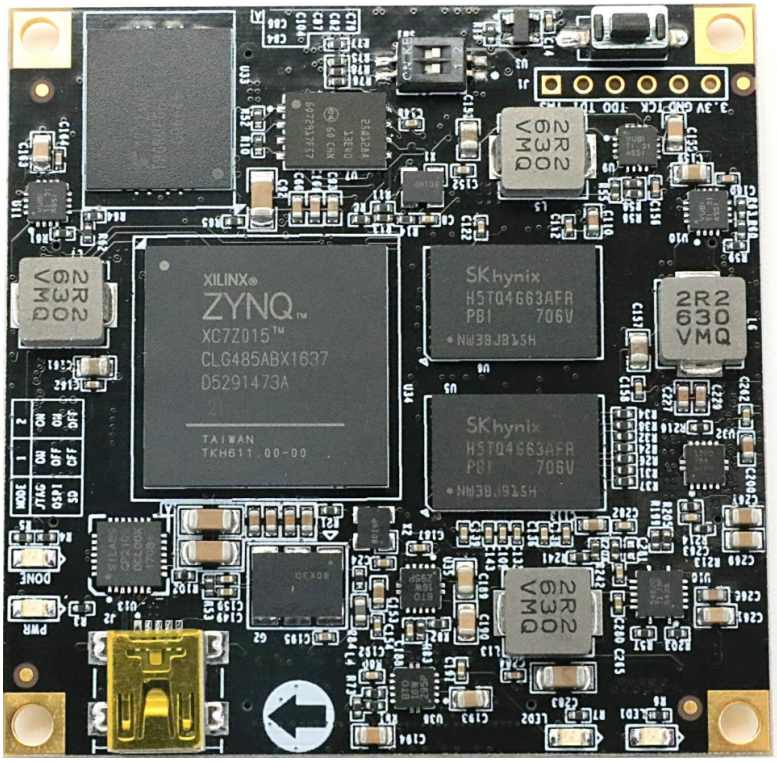

Figure 2-1-1: AC7015B SoM board Front

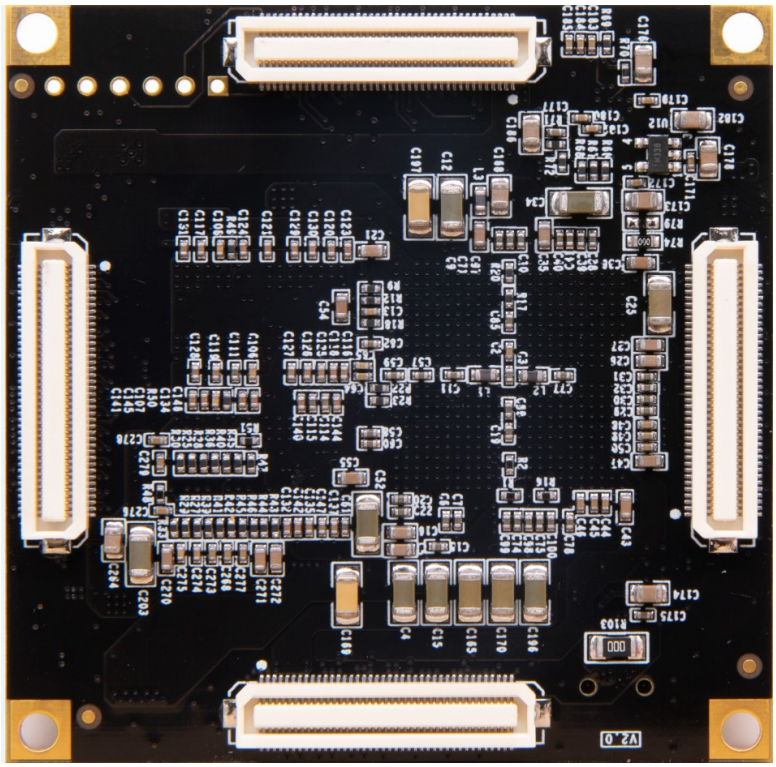

Figure 2-1-2: AC7015B Core Board Rear View

2.2 ZYNQ Chip

The development board uses Xilinx's Zynq7000 series chip, model XC7Z015-2CLG485I. The chip's PS system integrates 2 ARM Cortex™-A9 processors, AMBA® interconnects, internal memory, external memory interfaces and peripherals. These peripherals mainly include USB bus interface, Ethernet interface, SD/SDIO interface, I2C bus interface, CAN bus interface, UART interface, GPIO etc. The PS can operate independently and start up at power up or reset. Figure 2-2-1 detailed the Overall Block Diagram of the ZYNQ7000 Chip.

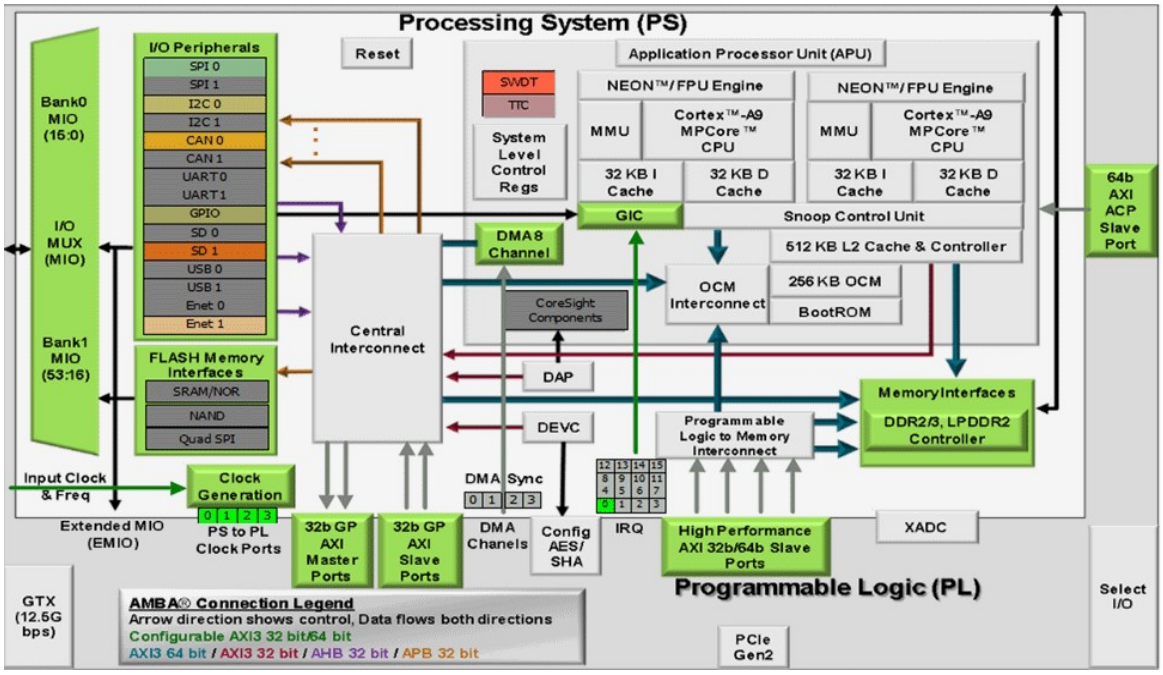

Figure 2-2- 1: Overall Block Diagram of the ZYNQ7000 Chip

The main parameters of the PS system part are as follows:

- 766MHz ARM dual-core CortexA9-based application processor, ARM-v7 architecture, up to 1GHz
- 32KB level 1 instruction and data cache per CPU, 512KB level 2 cache 2 CPU shares
- On-chip boot ROM and 256KB on-chip RAM
- External storage interface, support 16 / 32bit DDR2, DDR3 interface
- Two Gigabit NIC support: divergent-aggregate DMA, GMII, RGMII, SGMII interface
- Two USB2.0 OTG interfaces, each supporting up to 12 nodes.
- Two CAN 2.0B bus interfaces

- Two SD card, SDIO, MMC compatible controllers
- 2 SPIs, 2 UARTs, 2 I2C interfaces
- 4 groups of 32bit GPIO, 54 (32+22) as PS system IO, 64 connected to PL
- High bandwidth connection within PS and PS to PL

The main parameters of the PL logic part are as follows:

- Logic Cells：74K；
- LUTs: 46,200
- flip-flops:92,400
- 18x25MACCs：160.
- Block RAM：3.3Mb；
- 4-way high-speed GTP transceiver, supporting PCIE Gen2x4;
- 2 AD converters for on-chip voltage, temperature sensing and up to 17 external differential input channels, 1MBPS

XC7Z015-2CLG485I chip speed grade is -2, industrial grade, package is BGA484, pin pitch is 0.8mm, the specific chip model definition of ZYNQ7000 series is shown in Figure 2-2-2:

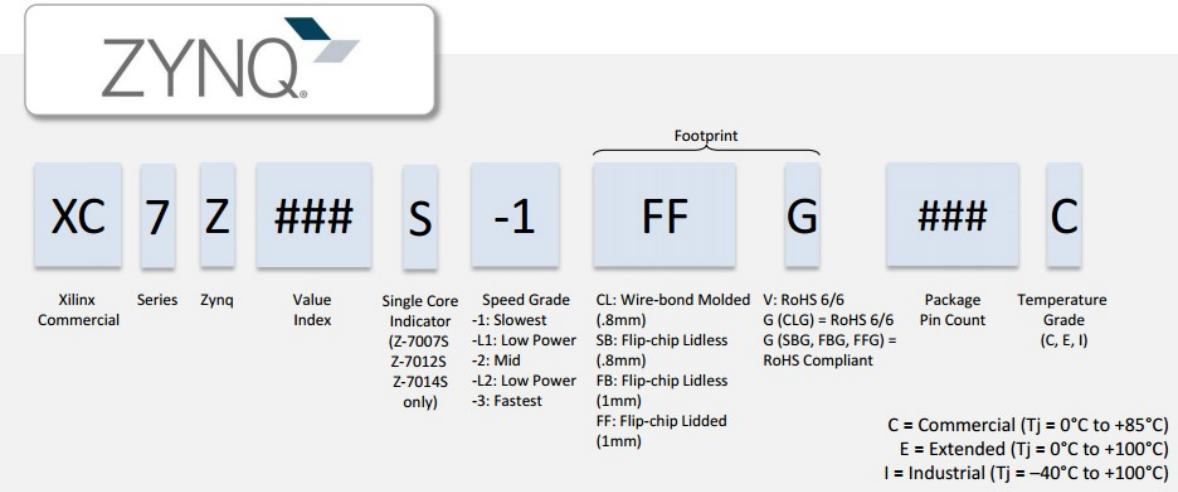

Figure 2-2-2: The Specific Chip Model Definition of ZYNQ7000 Series

2.3 DDR3 DRAM

The AC7015B SoM board is equipped with two SK Hynix DDR3 SDRAM chips (1GB total), model H5TQ4G63AFR-PBI (compatible with Micron MT41J256M16RE-125). The bus width of DDR3 SDRAM is 32 bits in total. DDR3 SDRAM has a maximum operating speed of 533MHz (data rate 1066Mbps). The DDR3 memory system is directly connected to the memory interface of the BANK 502 of the ZYNQ Processing System (PS). The specific configuration of DDR3 SDRAM is shown in Table 2-3-1:

Table 2-3-1: DDR3 SDRAM Configuration

Bit No.	Chip Model	Capacity	Factory
U5, U6	H5TQ4G63AFR-PBI	256M x 16bit	SK Hynix

The hardware design of DDR3 requires strict consideration of signal integrity. We have fully considered the matching resistor/terminal resistance, trace impedance control, and trace length control in circuit design and PCB design to ensure high-speed and stable operation of DDR3.

The hardware connection of DDR3 DRAM is shown in Figure 2-3-1:

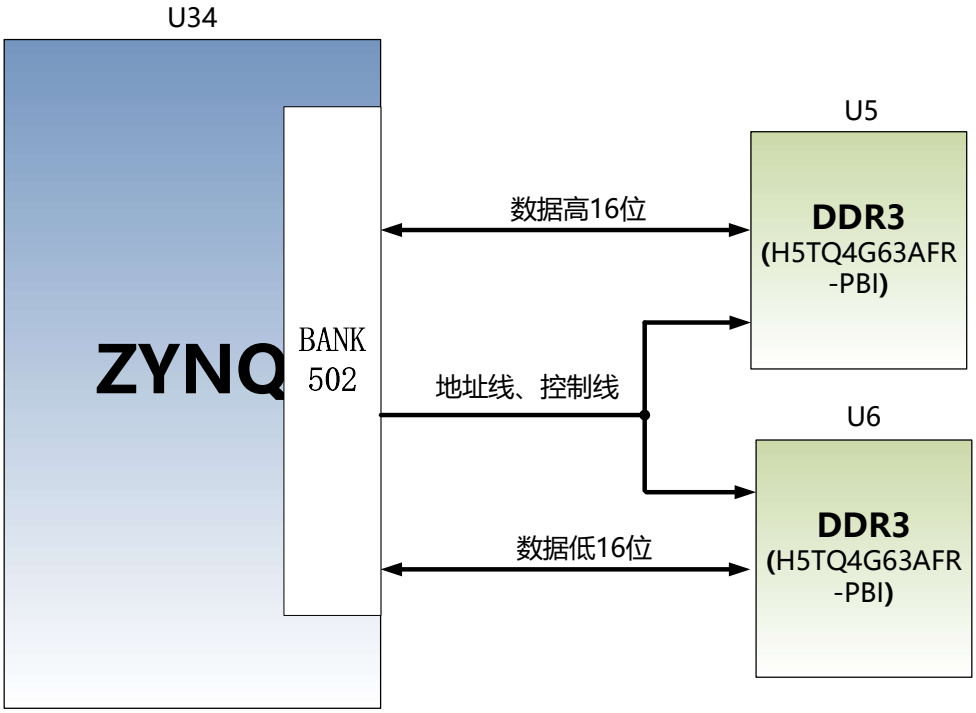

Figure 2-3-1: The Schematic part of DDR3 DRAM

DDR3 DRAM Pin Assignment:

Signal Name	ZYNQ Pin Name	ZYNQ Pin No.
DDR3_DQS0_P	PS_DDR_DQS_P0_502	C21
DDR3_DQS0_N	PS_DDR_DQS_N0_502	D21

DDR3_DQS1_P	PS_DDR_DQS_P1_502	H21
DDR3_DQS1_N	PS_DDR_DQS_N1_502	J21
DDR3_DQS2_P	PS_DDR_DQS_P2_502	N21
DDR3_DQS2_N	PS_DDR_DQS_N2_502	P21
DDR3_DQS3_P	PS_DDR_DQS_P3_502	V21
DDR3_DQS4_N	PS_DDR_DQS_N3_502	W21
DDR3_D0	PS_DDR_DQ0_502	D22
DDR3_D1	PS_DDR_DQ1_502	C20
DDR3_D2	PS_DDR_DQ2_502	B21
DDR3_D3	PS_DDR_DQ3_502	D20
DDR3_D4	PS_DDR_DQ4_502	E20
DDR3_D5	PS_DDR_DQ5_502	E22
DDR3_D6	PS_DDR_DQ6_502	F21
DDR3_D7	PS_DDR_DQ7_502	F22
DDR3_D8	PS_DDR_DQ8_502	G21
DDR3_D9	PS_DDR_DQ9_502	G22
DDR3_D10	PS_DDR_DQ10_502	L22
DDR3_D11	PS_DDR_DQ11_502	L21
DDR3_D12	PS_DDR_DQ12_502	L20
DDR3_D13	PS_DDR_DQ13_502	K22
DDR3_D14	PS_DDR_DQ14_502	J22
DDR3_D15	PS_DDR_DQ15_502	K20
DDR3_D16	PS_DDR_DQ16_502	M22
DDR3_D17	PS_DDR_DQ17_502	T20
DDR3_D18	PS_DDR_DQ18_502	N20
DDR3_D19	PS_DDR_DQ19_502	T22
DDR3_D20	PS_DDR_DQ20_502	R20
DDR3_D21	PS_DDR_DQ21_502	T21
DDR3_D22	PS_DDR_DQ22_502	M21
DDR3_D23	PS_DDR_DQ23_502	R22
DDR3_D24	PS_DDR_DQ24_502	Y20
DDR3_D25	PS_DDR_DQ25_502	U22
DDR3_D26	PS_DDR_DQ26_502	AA22
DDR3_D27	PS_DDR_DQ27_502	U21
DDR3_D28	PS_DDR_DQ28_502	W22
DDR3_D29	PS_DDR_DQ29_502	W20

DDR3_D30	PS_DDR_DQ30_502	V20
DDR3_D31	PS_DDR_DQ31_502	Y22
DDR3_DM0	PS_DDR_DM0_502	B22
DDR3_DM1	PS_DDR_DM1_502	H20
DDR3_DM2	PS_DDR_DM2_502	P22
DDR3_DM3	PS_DDR_DM3_502	AA21
DDR3_A0	PS_DDR_A0_502	M19
DDR3_A1	PS_DDR_A1_502	M18
DDR3_A2	PS_DDR_A2_502	K19
DDR3_A3	PS_DDR_A3_502	L19
DDR3_A4	PS_DDR_A4_502	K17
DDR3_A5	PS_DDR_A5_502	K18
DDR3_A6	PS_DDR_A6_502	J16
DDR3_A7	PS_DDR_A7_502	J17
DDR3_A8	PS_DDR_A8_502	J18
DDR3_A9	PS_DDR_A9_502	H18
DDR3_A10	PS_DDR_A10_502	J20
DDR3_A11	PS_DDR_A11_502	G18
DDR3_A12	PS_DDR_A12_502	H19
DDR3_A13	PS_DDR_A13_502	F19
DDR3_A14	PS_DDR_A14_502	G19
DDR3_BA0	PS_DDR_BA0_502	L16
DDR3_BA1	PS_DDR_BA1_502	L17
DDR3_BA2	PS_DDR_BA2_502	M17
DDR3_S0	PS_DDR_CS_B_502	P17
DDR3_RAS	PS_DDR_RAS_B_502	R18
DDR3_CAS	PS_DDR_CAS_B_502	P20
DDR3_WE	PS_DDR_WE_B_502	R19
DDR3_ODT	PS_DDR_ODT_502	P18
DDR3_RESET	PS_DDR_DRST_B_502	F20
DDR3_CLK0_P	PS_DDR_CKP_502	N19
DDR3_CLK0_N	PS_DDR_CKN_502	N18
DDR3_CKE	PS_DDR_CKE_502	T19

2.4 QSPI Flash

The core board is equipped with a 256MBit Quad-SPI FLASH chip,model W25Q256FVEI, which uses the 3.3V CMOS voltage standard. Due to the non- volatile nature of QSPI FLASH, it can be used as a boot device for the system to store the boot image of the system. These images mainly include FPGA bit files, ARM application code, and other user data files. The specific models and related parameters of QSPI FLASH are shown in Table 2-4-1.

Table 2-4- 1: QSPI FLASH Specification

Position	Model	Capacity	Factory
U7	W25Q256FVEI	32M Byte	Winbond

QSPI FLASH is connected to the GPIO port of the BANK500 in the PS section of the ZYNQ chip. In the system design, the GPIO port functions of these PS ports need to be configured as the QSPI FLASH interface. Figure 2-4-1 shows the QSPI Flash in the schematic.

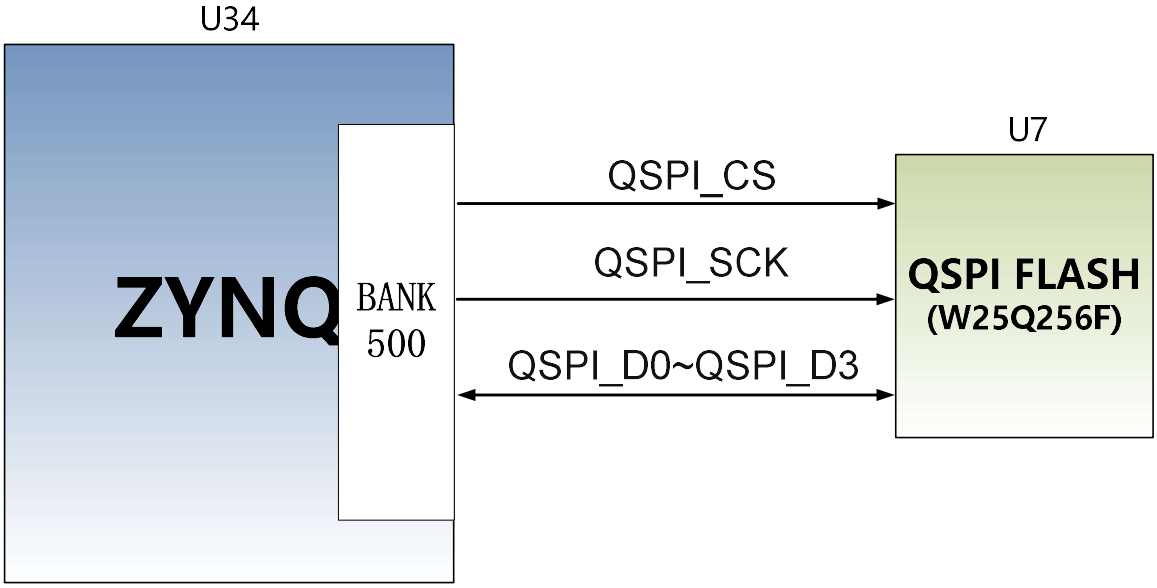

Figure 2-4-1: QSPI Flash in the schematic

Pin Assignment of QSPI Flash:

Signal Name	ZYNQ Pin Name	ZYNQ Pin No.
QSPI_SCK	PS_MIO6_500	A19
QSPI_CS	PS_MIO1_500	A22
QSPI_D0	PS_MIO2_500	A21
QSPI_D1	PS_MIO3_500	F17
QSPI_D2	PS_MIO4_500	E19

QSPI_D3	PS_MIO5_500	A20

2.5 eMMC Flash

The core board is equipped with a large capacity 8GB eMMC FLASH chip, model THGBMFG6C1LBAIL, which supports the JEDEC e-MMC V5.0 standard HS-MMC interface with level support of 1.8V or 3.3V. The data width of the eMMC FLASH and ZYNQ connections is 4 bits. Due to the large capacity and non-volatile nature of eMMC FLASH, it can be used as a large-capacity storage device for the ZYNQ system, such as ARM-based applications, system files, and other user data files. The specific models and related parameters of eMMC FLASH are shown in Table 2-5-1:

Position	Model	Capacity	Factory
U33	THGBMFG6C1LBAIL	8G Byte	TOSHIBA

Table 2-5- 1: eMMC FLASH Specification

eMMC FLASH is connected to the GPIO port of the BANK501 in the PS section of the ZYNQ chip. In the system design, the GPIO port functions of these PS ports need to be configured as the SD interface. Figure 2-5-1 shows the eMMC Flash in the schematic.

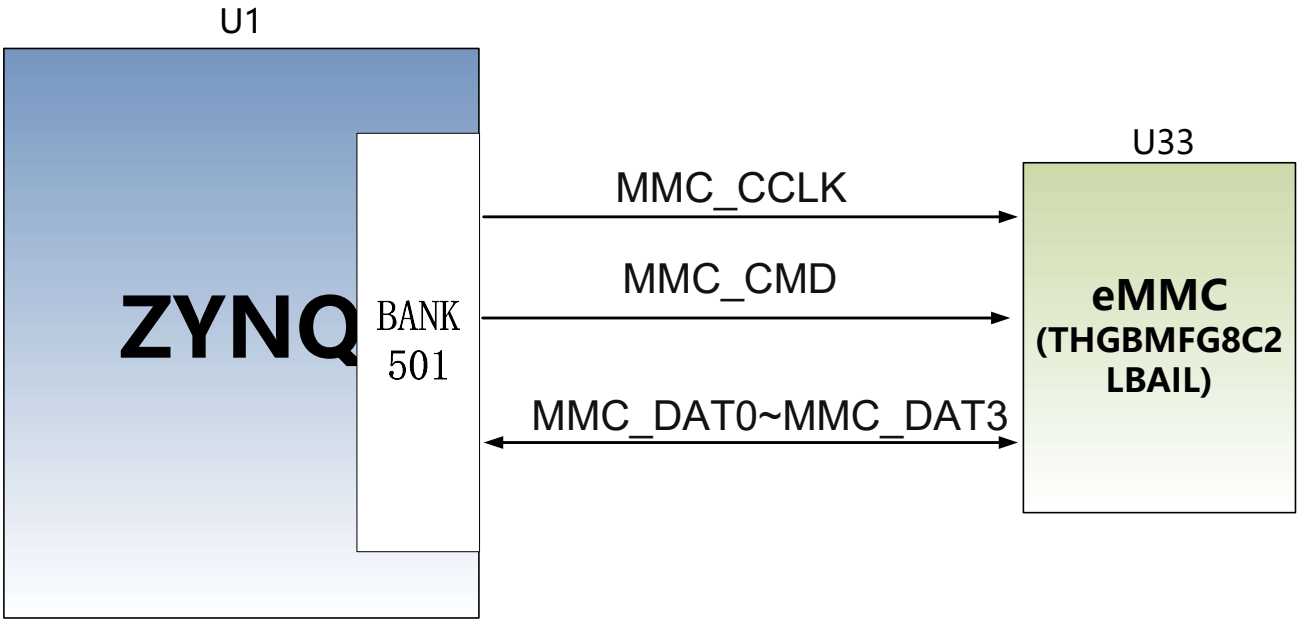

Figure 2-5-1: eMMC Flash in the Schematic

Pin Assignment of eMMC Flash:

Signal Name	ZYNQ Pin Name	ZYNQ Pin No.
MMC_CCLK	PS_MIO48_501	D12
MMC_CMD	PS_MIO47_501	B13
MMC_D0	PS_MIO46_501	D11
MMC_D1	PS_MIO49_501	C9
MMC_D2	PS_MIO50_501	D10
MMC_D3	PS_MIO51_501	C13

2.6 Clock configuration

The AC7015B SoM board provides active clocks for the PS system, PL logic, and GTP transceiver, allowing all of the above items to operate independently. The PS and PL terminals use single ended crystal oscillators, while the GTP terminal uses differential crystal oscillators.

PS system clock source

The ZYNQ chip provides a 33.333 MHz clock input to the PS section through the X1 crystal on the development board. The input of the clock is connected to the pins of PS_CLK_500 of the BANK500 of the ZYNQ chip. The schematic diagram is shown in Figure 2-6-1:

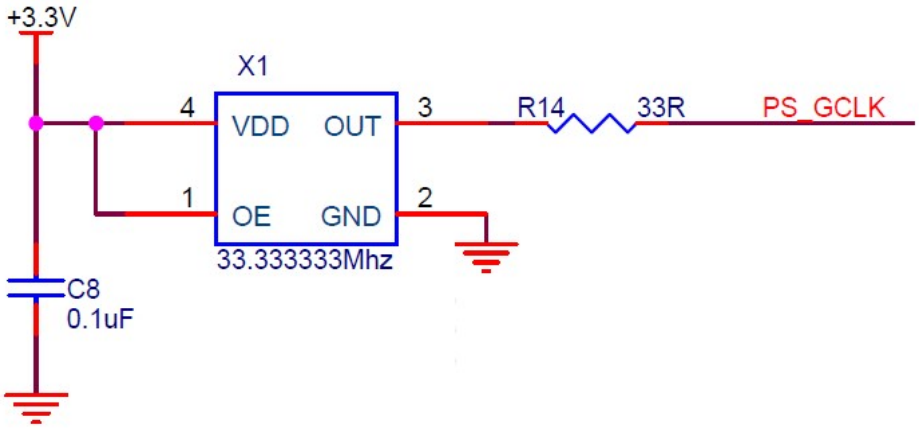

Figure 2-6-1: Active crystal oscillator to the PS section

PS Clock pin assignment:

Signal Name	ZYNQ Pin
PS_GCLK	**F16**

PL system clock source

The AC7015B core board provides a single-end125MHz PL system clock source with 3.3V power supply. The crystal output is connected to the global clock (MRCC) of the FPGA BANK13, which can be used to drive user logic within the FPGA. The schematic diagram of the clock source is shown in Figure 2-6-3:

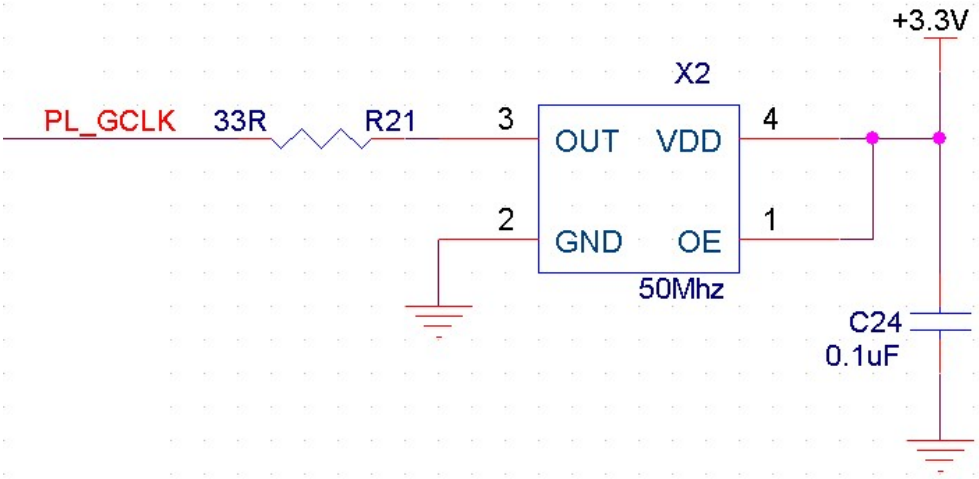

Figure 2-6-3: PL system clock source

PL Clock pin assignment:

Signal Name	ZYNQ Pin
PL_GCLK	Y14

Table 2-6-2: PL Clock pin assignment

GTP differential clock

The AC7015B SoM board provides a differential 125MHz GTP reference clock. The differential LVDS clock output is connected to the reference clock of BANK112, which can be used as the reference clock for fiber optic data communication on the backplane. The schematic diagram of the clock source is shown in Figures 2-6-5

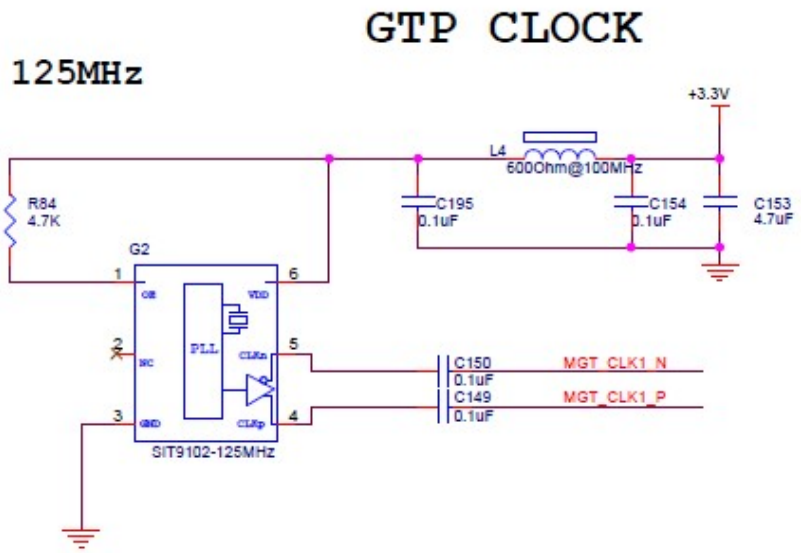

Figure 2-6-5 GTP Reference Clcok

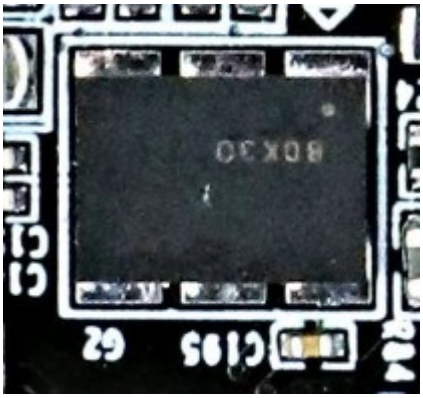

Figure 2-6-6 125MHz differential crystal oscillator

GTP Clock pin assignment:

Signal Name	ZYNQ Pin
MGT_CLK1_P	U5
MGT_CLK1_N	V5

2.7 USB to Serial Port

For the AC7015B SoM board to work and debug separately, we have a Uart to USB interface for the SoM board. Used for separate power supply and debugging of the SoM board. The conversion chip uses the USB-UART chip of Silicon Labs CP2102GM. The USB interface uses the MINI USB interface. It can be connected to the USB port of the upper PC with a USB cable for separate power supply and serial data communication of the SoM board.

The schematic diagram of USB Uart circuit design is shown in the following figure:

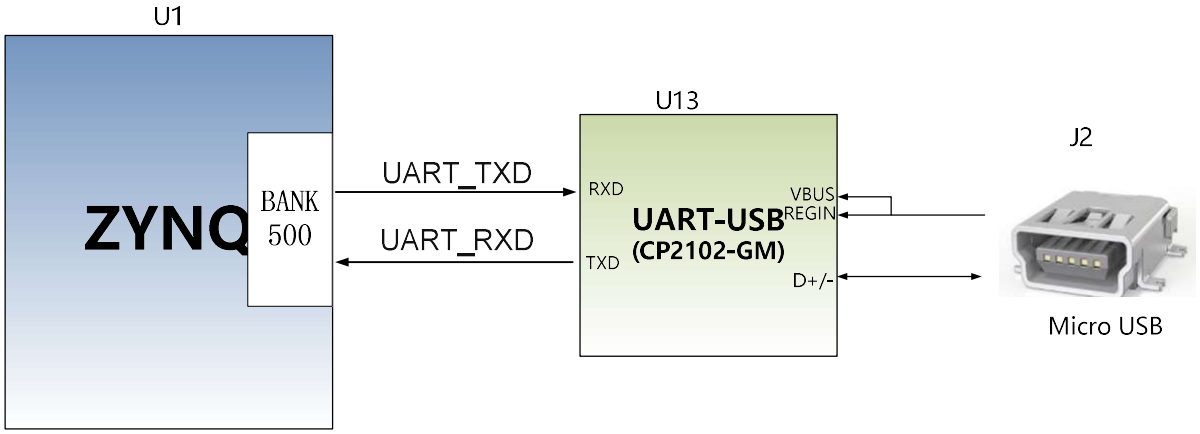

Figure 2-7-1 USB Uart Schematic

ZYNQ Pin Assignment for UART to serial port:

Signal Name	ZYNQ Pin Name	ZYNQ Pin No.	Description
UART_RXD	PS_MIO14_500	B17	Uart data Input
UART_TXD	PS_MIO15_500	E17	Uart data Output

2.8 LED Light

There are 4 red LED lights on the AC7015B SoM board, one of which is the power indicator light (PWR), one is the configuration LED light (DONE), 2 are the user LED lights (LED1~LED2). When the SoM board is powered, the power indicator will illuminate; when the FPGA is configured, the configuration LED will illuminate. 2 user LED lights are connected to the MIO of the PS, one is connected to the IO of the PL, the user can control the lighting and off by the program, when the IO voltage connected to the user LED light is high, the user LED light is off, when the connection IO voltage is low, the user LED will be illuminated. The schematic diagram of the LED light hardware connection is shown in Figure 2-8-1:

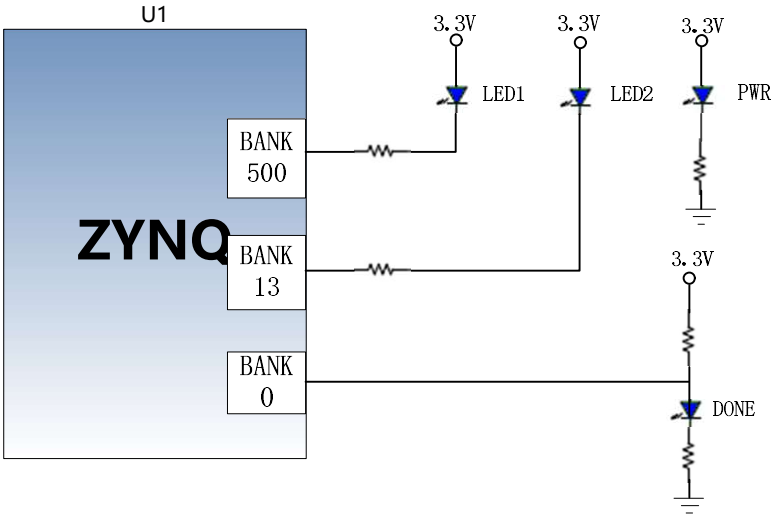

Figure 2-8-1: The schematic diagram of the LED light hardware connection

LED Pin Assignment:

Signal Name	ZYNQ Pin Name	ZYNQ Pin No.	Description
MIO0_LED	PS_MIO0_500	G17	User LED1
PL_LED	IO_0_13	T16	User LED2

Table 2-8-1: LED Pin Assignment

2.9 Reset Button

The AC7015B has a reset button RESET and circuitry on the SoM board. The reset signal is connected to the PS reset pin of the ZYNQ chip. The reset button can be used by the user to reset the ZYNQ system. When the reset button is pressed, the reset chip will generate a low-level reset signal to the ZYNQ chip. The schematic diagram of the reset button and reset chip connection is shown in Figure 2-9-1:

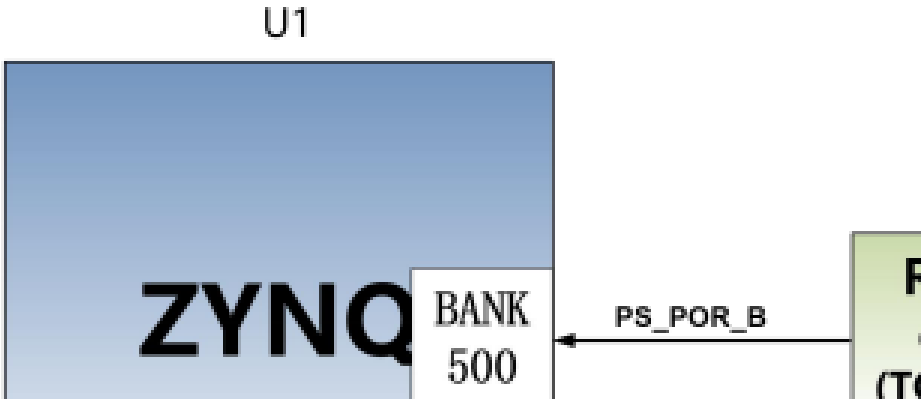

Figure 2-9-1Reset button connection diagram

Reset Pin Assignment:

Signal Name	ZYNQ Pin Name	ZYNQ Pin No.	Description

PS_POR_B	PS_POR_B_500	B18	ZYNQ Reset Key

Table 2-9- 1: Reset Pin Assignment

2.10 JTAG Interface

The JTAG test socket J1 is reserved on the AC7015B SoM board for separate JTAG download and debugging of the core board. Figure 2-10-1 is the schematic part of the JTAG port, which involves TMS, TDI, TDO, TCK, GND, +3.3V these six signals.

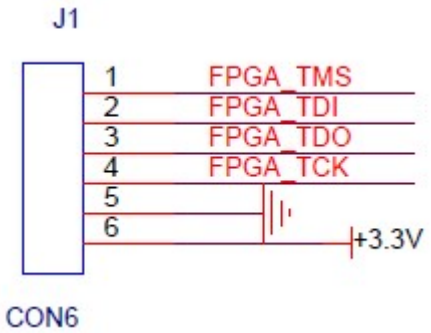

Figure 2-10-1 JTAG interface schematic for the part of SoM board

The JTAG interface J1 on the core board uses a 6-pin 2.54mm pitch single- row test hole. If you need to use the JTAG connection to debug on the core board, you need to solder a 6-pin single-row pin header. Figure 2-10-2 shows the physical map of the JTAG interface on the development board.

Figure 2-10-2 JTAG Interface Schematic

2.11 DIP switch configuration

The AC7015B has a 2-digit DIP switch SW1 on the SoM board to configure the ZYNQ system's startup mode. The AC7015B system development platform supports three startup modes. The three startup modes are JTAG debug mode, QSPI FLASH and SD card boot mode. After the XC7Z015 chip is powered up, it will detect the level of the MIO port (MIO5 and MIO4) to determine which startup mode. Users can select different startup modes through the DIP switch SW1 on the core board. The SW1

startup mode configuration is shown in Table 2-11-1:

SW1	Position（1，2）	MIO5, MIO4 Level	Startup mode
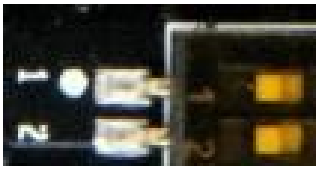	ON、ON	0、0	JTAG
	OFF、OFF	1、1	SD Card
	OFF、ON	1、0	QSPI FLASH

Table 2- 11- 1: The SW1 Startup Mode Configuration

2.12 Power Supply

The AC7015B SoM board is powered by DC5V. It is powered by the Mini USB interface when it is used alone. It is powered by the extension board when the backplane is connected. Please be careful not to supply power to the Mini USB and the extension board at the same time to avoid damage. The power supply design on the core board is shown in Figure 2-12-1.

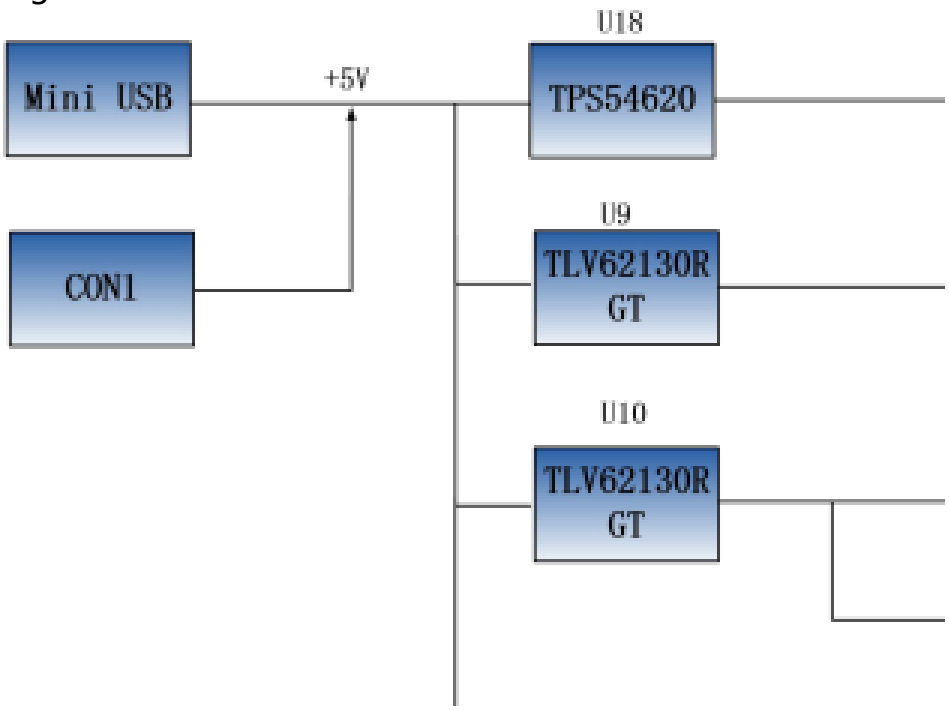

Figure 2-12-1 The Power Supply Design on the Core Board

The development board is powered by +5V, and is converted into +1.0V, +1.8V, +1.5V, +3.3V four-way power supply through four-way DC/DC power supply core TPS54620TLV62130RGT. The output current of +1.0V can be as high as 5A, and the other three output current are 3A. The VCCIO 2.5V power supply is generated by one LDO SPX3819M5-2-5. The VCCIO 2.5V power supply is mainly reserved for the BANK

power supply of the BANK35 of the FPGA. The user can select the power supply of BANK35 through two 0 ohm resistors (R74, R79). By default, the R74 on the development board is installed, and the resistor of R79 is not installed, so the power supply of BANK35 is +3.3V. The user can replace the resistor so that the IO of the BANK35 outputs a voltage standard of 2.5V. 1.5V generates the VTT and VREF voltages required by DDR3 through TI's TPS51200. The functions of each power distribution are shown in the following Table 12-1-1:

Power	Function
+1.0V	ZYNQ PS and PL section Core Voltage
+1.8V	ZYNQ PS and PL partial auxiliary voltage, BANK501 IO voltage, eMMC
+3.3V	ZCNQ Bank0, Bank500, Bank13, Bank35 VCCIO, QSIP FLASH, Clock Crystal
+1.5V	DDR3, ZYNQ Bank501
VREF,VTT(+0.75V)	DDR3
VCCIO(+2.5V)	Reserved for ZYNQ Bank33, Bank 34

Table 12-1-1: The Functions of Each Power Distribution

Because the power supply of ZYNQ FPGA has the power-on sequence requirement, in the circuit design, we have designed according to the power requirements of the chip, and the power-on is +1.0V->+1.8V-> (+1.5V, +3.3V, VCCIO). The circuit design ensures the normal operation of the chip. The power supply on the core board detailed as Figure 2-12-2 below:

2.13 Structure diagram

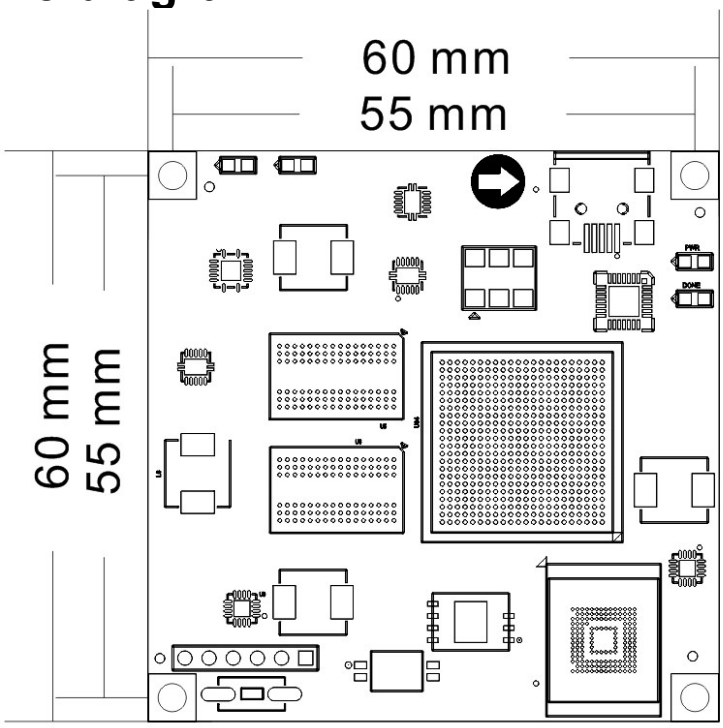

Figure 2-13-1: The Structure diagram（Top View）

2.14 Connector Pin Definition

The SoM board expands four high-speed expansion ports and uses four 80- pin inter-board connectors (CON1~CON4) to connect with the expansion board. The PIN pitch of the connector is 0.5mm. Among them, CON1 is connected to the power input, the MIO signal of the PS and the JTAG signal, and CON2~CON4 are connected to the IOs signals of BANK13, BANK34, BANK35 of PL and GTP transceiver signal. The IOs levels of BANK35 can be changed by changing the level of the LDO chip (U12) on the board. The default is 3.3V.

CON1 Connector Pin Assignment

CON1 Pin	Signal Name	ZYNQ Pin No.	CON1 Pin	Signal Name	ZYNQ Pin No.
1	+5V	-	2	+5V	-
3	+5V	-	4	+5V	-
5	+5V	-	6	+5V	-
7	+5V	-	8	+5V	-
9	GND	-	10	GND	-
11	PS_MIO13	A17	12	ETH_TXD0	E14

13	PS_MIO12	C18	14	ETH_TXD1	A16
15	-	-	16	ETH_TXD2	E13
17	-	-	18	ETH_TXD3	A15
19	GND	-	20	GND	-
21	-	-	22	ETH_TXCK	D17
23	-	-	24	ETH_TXCTL	F12
25	-	-	26	ETH_RXD3	A10
27	-	-	28	ETH_RXD2	F11
29	GND	-	30	GND	-
31	PS_MIO7	D18	32	ETH_RXD1	B16
33	PS_MIO8	E18	34	ETH_RXD0	E12
35	PS_MIO9	C19	36	ETH_RXCTL	D16
37	PS_MIO11	B19	38	ETH_RXCK	A9
39	GND	-	40	GND	-
41	-	-	42	ETH_MDC	D13
43	-	-	44	ETH_MDIO	C11
45	-	-	46	OTG_STP	A12
47	-	-	48	OTG_DIR	E15
49	GND	-	50	GND	-
51	XADC_VP	L12	52	OTG_CLK	A14
53	XADC_VN	M11	54	OTG_NXT	F14
55	-	-	56	OTG_DATA0	C16
57	PS_MIO10	G16	58	OTG_DATA1	G11
59	GND	-	60	GND	-
61	SD_CLK	E9	62	OTG_DATA2	B11
63	SD_D1	B12	64	OTG_DATA3	F9
65	SD_D0	D15	66	OTG_DATA4	A11
67	SD_CMD	C15	68	OTG_DATA5	B9
69	GND	-	70	GND	-
71	SD_D3	B14	72	OTG_DATA6	F10
73	SD_D2	E10	74	OTG_DATA7	C10
75	-	-	76	-	-
77	FPGA_TMS	H10	78	FPGA_TCK	H11
79	FPGA_TDO	G9	80	FPGA_TDI	H9

CON2 Connector Pin Assignment

CON2 Pin	Signal Name	ZYNQ Pin No.	CON2 Pin	Signal Name	ZYNQ Pin No.
1	B34_L19_N	N5	2	B34_L13_N	T1
3	B34_L19_P	N6	4	B34_L13_P	T2
5	B34_L2_P	J7	6	B34_L21_N	N3
7	B34_L2_N	J6	8	B34_L21_P	N4
9	GND	-	10	GND	-
11	B34_L1_P	J8	12	B34_L12_N	L4
13	B34_L1_N	K8	14	B34_L12_P	L5
15	B34_L11_N	K3	16	B35_L4_P	G8
17	B34_L11_P	K4	18	B35_L4_N	G7
19	GND	-	20	GND	-
21	B35_L24_P	H1	22	B35_L19_P	H4
23	B35_L24_N	G1	24	B35_L19_N	H3
25	B34_L8_N	J1	26	B35_L22_P	G3
27	B34_L8_P	J2	28	B35_L22_N	G2
29	GND	-	30	GND	-
31	B35_IO25	H5	32	B35_L21_P	E4
33	B35_IO0	H6	34	B35_L21_N	E3
35	B35_L20_P	G4	36	B35_L2_P	D7
37	B35_L20_N	F4	38	B35_L2_N	D6
39	GND	-	40	GND	-
41	B35_L5_P	F5	42	B35_L23_P	F2
43	B35_L5_N	E5	44	B35_L23_N	F1
45	B35_L6_P	G6	46	B35_L17_P	E2
47	B35_L6_N	F6	48	B35_L17_N	D2
49	GND	-	50	GND	-
51	B35_L1_N	E7	52	B35_L16_P	D1
53	B35_L1_P	F7	54	B35_L16_N	C1
55	B35_L14_P	D3	56	B35_L18_N	B1
57	B35_L14_N	C3	58	B35_L18_P	B2
59	GND	-	60	GND	-
61	B35_L12_N	C4	62	B35_L15_N	A1
63	B35_L12_P	D5	64	B35_L15_P	A2
65	B35_L11_N	C5	66	B35_L13_N	B3
67	B35_L11_P	C6	68	B35_L13_P	B4

69	GND	-	70	GND	-
71	B35_L3_P	E8	72	B35_L10_N	A4
73	B35_L3_N	D8	74	B35_L10_P	A5
75	B35_L8_P	B7	76	B35_L9_N	A6
77	B35_L8_N	B6	78	B35_L9_P	A7
79	B35_L7_P	C8	80	B35_L7_N	B8

CON3 Connector Pin Assignment

CON3 Pin	Signal Name	ZYNQ Pin No.	CON3 Pin	Signal Name	ZYNQ Pin No.
1	MGT_CLK0_P	U9	2	-	-
3	MGT_CLK0_N	V9	4	GND	-
5	GND	-	6	MGT_RX2_ N	AB9
7	-	-	8	MGT_RX2_p	AA9
9	GND	-	10	GND	-
11	MGT_RX1_P	W8	12	-	-
13	MGT_RX1_N	Y8	14	GND	-
15	GND	-	16	MGT_TX2_P	AA5
17	-	-	18	MGT_TX2_N	AB5
19	GND	-	20	GND	-
21	MGT_TX1_P	W4	22	-	-
23	MGT_TX1_N	Y4	24	GND	-
25	GND	-	26	MGT_RX3_N	Y6
27	-	-	28	MGT_RX3_P	W6
29	GND	-	30	GND	-
31	MGT_RX0_P	AA7	32	-	-
33	MGT_RX0_N	AB7	34	GND	-
35	GND	-	36	MGT_TX3_P	W2
37	-	-	38	MGT_TX3_N	Y2
39	GND	-	40	GND	-
41	MGT_TX0_P	AA3	42	-	-
43	MGT_TX0_N	AB3	44	-	-
45	GND		46	B34_L3_P	K7
47	-		48	B34_L3_N	L7
49	GND	-	50	GND	-
51	B34_L4_N	M6	52	-	-
53	B34_L4_P	L6	54	-	-

55	-	-	56	B34_L14_N	U1
57	-	-	58	B34_L14_P	U2
59	GND	-	60	GND	-
61	B34_L20_N	P5	62	-	
63	B34_L20_P	P6	64	-	
65	-	-	66	B34_L9_N	K2
67	-	-	68	B34_L9_P	J3
69	GND	-	70	GND	-
71	B34_L10_N	L1	72	-	-
73	B34_L10_P	L2	74	-	-
75	-	-	76	-	-
77	B34_IO25	R8	78	B34_L7_P	J5
79	B34_IO0	H8	80	B34_L7_N	K5

CON4 Connector Pin Assignment

CON4 Pin	Signal Name	ZYNQ Pin No.	CON4 Pin	Signal Name	ZYNQ Pin No.
1	B13_L22_N	U18	2	B13_L20_P	U19
3	B13_L22_P	U17	4	B13_L20_N	V19
5	B13_L23_P	V16	6	B13_L19_N	T17
7	B13_L23_N	W16	8	B13_L19_P	R17
9	GND	-	10	GND	-
11	B13_L14_N	AA17	12	B13_L18_N	AA20
13	B13_L14_P	AA16	14	B13_L18_P	AA19
15	B13_L13_N	Y19	16	B13_L15_N	AB22
17	B13_L13_P	Y18	18	B13_L15_P	AB21
19	GND	-	20	GND	-
21	B13_L11_N	AA15	22	B13_L21_P	V18
23	B13_L11_P	AA14	24	B13_L21_N	W18
25	B13_L17_P	AB16	26	B13_L24_P	W17
27	B13_L17_N	AB17	28	B13_L24_N	Y17
29	GND	-	30	GND	-
31	B13_L16_N	AB19	32	B13_L2_P	V15
33	B13_L16_P	AB18	34	B13_L2_N	W15
35	B34_L22_P	M4	36	B13_L9_N	AB14
37	B34_L22_N	M3	38	B13_L9_P	AB13
39	GND	-	40	GND	-

41	B13_L12_N	Y15	42	B13_L6_N	U14
43	B13_IO25	U16	44	B13_L6_P	U13
45	B34_L6_P	M8	46	B34_L23_P	R5
47	B34_L6_N	M7	48	B34_L23_N	R4
49	GND	-	50	GND	-
51	B13_L1_N	V14	52	B13_L8_N	AB12
53	B13_L1_P	V13	54	B13_L8_P	AA12
55	B13_L7_N	AB11	56	B34_L17_N	R2
57	B13_L7_P	AA11	58	B34_L17_P	R3
59	GND	-	60	GND	-
61	B34_L24_P	P7	62	B34_L5_P	N8
63	B34_L24_N	R7	64	B34_L5_N	P8
65	B13_L4_P	V11	66	B34_L18_P	P3
67	B13_L4_N	W11	68	B34_L18_N	P2
69	GND	-	70	GND	-
71	B13_L3_P	W12	72	B13_L10_P	Y12
73	B13_L3_N	W13	74	B13_L10_N	Y13
75	B13_L5_N	U12	76	B34_L15_N	M1
77	B13_L5_P	U11	78	B34_L15_P	M2
79	B34_L16_N	P1	80	B34_L16_P	N1

3. Extension Board

3.1 Introduction

Through the previous function introduction, we can understand the function of the expansion board.

- 1 Port PCIEx2 Interface
- 2 Ports SFP Interface
- 2 ports 10/ 100M/ 1000M Ethernet RJ-45 interface
- 1 port HDMI input display interface
- 4 ports USB HOST interface
- 1 port USB Uart communication interface
- 1 port SD card interface
- 2 ports 40-pin expansion port
- JTAG debug interface
- 2 independent buttons
- 5 user LED lights

3.2 Gigabit Ethernet interface

The AX7015B has two Gigabit Ethernet interfaces on the expansion board, one of which is the connected PS system side. Another Ethernet interface is connected to the logical IO port of the PL. The Gigabit Ethernet interface connected to the PL side, needs to be mounted to ZYNQ's AXI bus system by call IP program.

The Ethernet chip adopts JL Semiconductor's industrial grade Ethernet GPHY chip (JL2121-N040I) to provide network communication services for users. The Ethernet PHY chip on the PS end is connected to the GPIO interface of ZYNQ's PS end BANK501. The Ethernet PHY chip on the PL end is connected to the IO of BANK35. The JL2121 chip supports a 10/100/1000 Mbps network transmission rate and communicates data with the MAC layer of the Zynq7000 system through the RGMII interface. JL2121 supports MDI/MDX adaptation, various speed adaptations, Master/Slave adaptation, and supports MDIO bus for PHY register management.

When powered on, JL2121 will detect the level status of specific IO to determine its own operating mode. Table 3-2-1 describes the default setting information of the GPHY chip after power on.

Configuration Pin	Instructions	Configuration value
RXD3_ADR0 RXC_ADR1 RXCTL_ADR2	MDIO/MDC Model PHY Address	PHY Address 001
RXD1_TXDLY	TX Clock 2ns delay	Delay
RXD0_RXDLY	RX Clock 2ns delay	Delay

Table 3-2-1: Default setting after power-on of the KS GPHY chip

When the network is connected to Gigabit Ethernet, the data transmission between ZYNQ and PHY chip JL2121 is communicated through the RGMII bus, with a transmission clock of 125Mhz. The data is sampled on the rising and falling edges of the clock.

When the network is connected to a 100 Mbps Ethernet, the data transmission between ZYNQ and PHY chip JL2121 is communicated through the RMII bus, with a transmission clock of 25Mhz. The data is sampled on the rising and falling edges of the clock.

Figure 3-2-1 shows the schematic diagram of ZYNQ PS end 1-way Ethernet PHY chip connection:

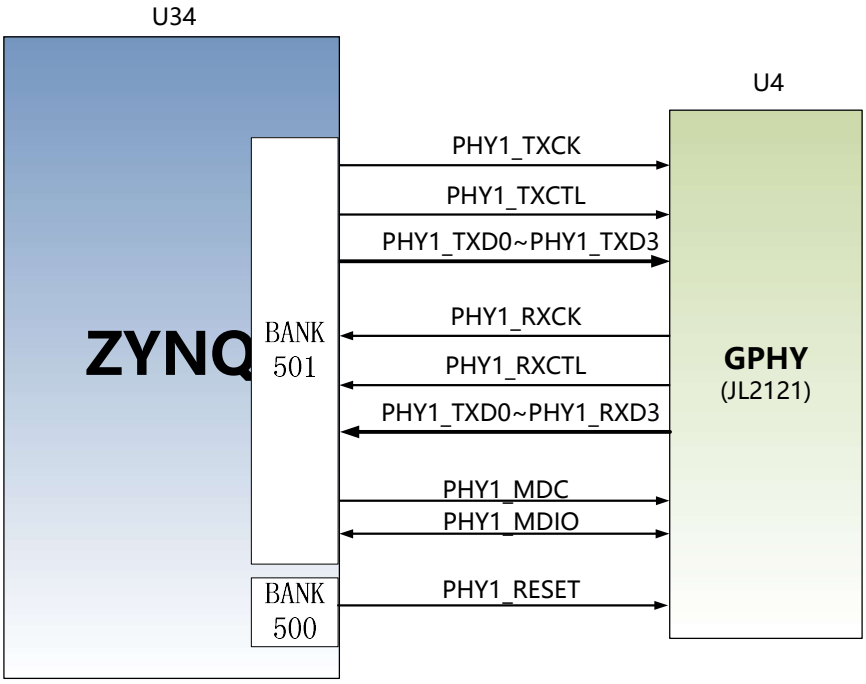

Figure 3-2-1: The connection of the ZYNQ PS end and PHY chip

Figure 3-2 shows the schematic diagram of the connection of one Ethernet PHY chip at the ZYNQ PL end:

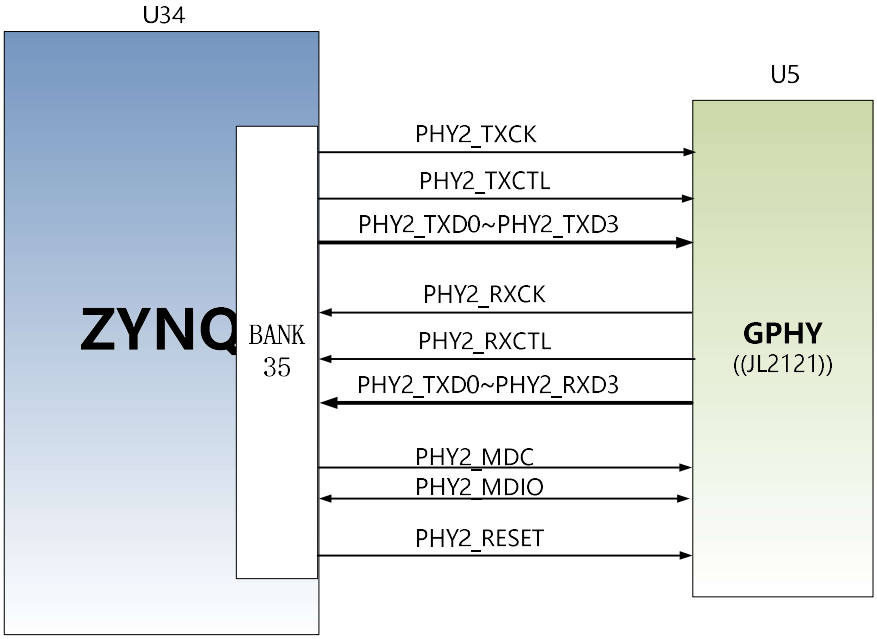

Figure 3-2-2: The connection of the 4 ZYNQ PL end and PHY chip

PS Side Gigabit pin assignment:

Signal Name	ZYNQ Pin Name	ZYNQ Pin No.	Description
PHY1_TXCK	PS_MIO16_501	D17	RGMII Transmit Clock
PHY1_TXD0	PS_MIO17_501	E14	Transit data bit 0
PHY1_TXD1	PS_MIO18_501	A16	Transit data bit1
PHY1_TXD2	PS_MIO19_501	E13	Transit data bit2
PHY1_TXD3	PS_MIO20_501	A15	Transit databit3
PHY1_TXCTL	PS_MIO21_501	F12	Transmit enable Signal
PHY1_RXCK	PS_MIO22_501	A9	RGMII Receive Clock
PHY1_RXD0	PS_MIO23_501	E12	Receive data Bit0
PHY1_RXD1	PS_MIO24_501	B16	Receive data Bit1
PHY1_RXD2	PS_MIO25_501	F11	Receive data Bit2
PHY1_RXD3	PS_MIO26_501	A10	Receive data Bit3
PHY1_RXCTL	PS_MIO27_501	D16	Receive enable Signal
PHY1_MDC	PS_MIO52_501	D13	MDIO Management Clock
PHY1_MDIO	PS_MIO53_501	C11	MDIO Management Data
PHY1_RESET	PS_MIO7	D18	Reset Signal

PL Side Gigabit pin assignment:

Signal Name	ZYNQ Pin Name	ZYNQ Pin No.	Description
PHY2_TXCK	B35_L16_P	D1	RGMII Transmit Clock
PHY2_TXD0	B35_L23_P	F2	Transit data bit 0

PHY2_TXD1	B35_L23_N	F1	Transit data bit1
PHY2_TXD2	B35_L17_P	E2	Transit data bit2
PHY2_TXD3	B35_L17_N	D2	Transit data bit3
PHY2_TXCTL	B35_L16_N	C1	Transmit enable Signal
PHY2_RXCK	B35_L13_P	B4	RGMII Receive Clock
PHY2_RXD0	B35_L15_P	A2	Receive data Bit0
PHY2_RXD1	B35_L15_N	A1	Receive data Bit1
PHY2_RXD2	B35_L18_P	B2	Receive data Bit2
PHY2_RXD3	B35_L18_N	B1	Receive data Bit3
PHY2_RXCTL	B35_L13_N	B3	Receive enable Signal
PHY2_MDC	B35_L7_P	C8	MDIO Management Clock
PHY2_MDIO	B35_L7_P	B8	MDIO Management Data
PHY2_RESET	B35_L8_P	B7	Reset Signal

3.3 USB 2.0 Host Interface

There are 4 USB2.0 HOST interfaces on the AX7015B expansion board. The USB2.0 transceiver uses a 1.8V, high-speed USB3320C-EZK chip that supports the ULPI standard interface, and then expands the 4-port USB HOST interface through a USB HUB chip USB2514. ZYNQ's USB bus interface is connected to the USB3320C-EZK transceiver to achieve high-speed USB2.0 Host mode data communication. The USB3320C's USB data and control signals are connected to the IO port of the BANK501 on the PS side of the ZYNQ chip. The USB interface differential signal (DP/DM) is connected to the USB2514 chip to extend the four USB ports. Two 24MHz crystal oscillators provide system clocks for the USB3320C and USB2514 chips, respectively.

4 USB HOST interfaces are provided on the expansion board. The USB interface is a flat USB interface (USB Type A), which allows users to connect different USB Slave peripherals (such as USB mouse and USB keyboard) at the same time. In addition, the expansion board provides a +5V power supply for each USB interface.

The schematic diagram of the ZYNQ processor, USB3320C-EZK chip andUSB2514 chip connection is shown as 3-3-1:

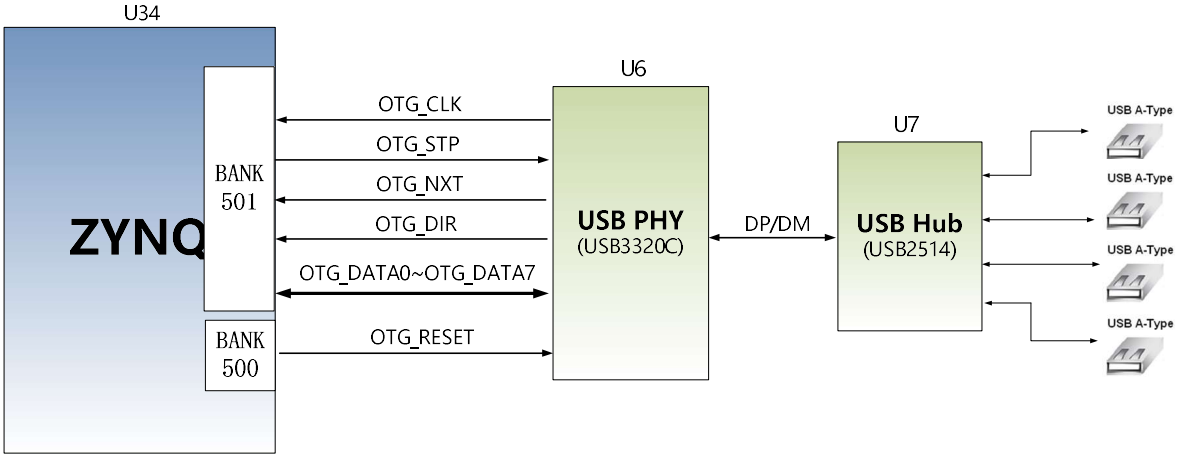

Figure 3-3- 1: The connection between Zynq7000 and USB chip

USB2.0 Pin Assignment:

Signal Name	ZYNQ Pin Name	ZYNQ Pin No.	Description
OTG_DATA4	PS_MIO28_501	A11	USB Data Bit4
OTG_DIR	PS_MIO29_501	E15	USB Data Direction Signal
OTG_STP	PS_MIO30_501	A12	USB Stop Signal
OTG_NXT	PS_MIO31_501	F14	USB Next Data Signal
OTG_DATA0	PS_MIO32_501	C16	USB Data Bit0
OTG_DATA1	PS_MIO33_501	G11	USB Data Bit1
OTG_DATA2	PS_MIO34_501	B11	USB Data Bit2
OTG_DATA3	PS_MIO35_501	F9	USB Data Bit3
OTG_CLK	PS_MIO36_501	A14	USB Clock Signal
OTG_DATA5	PS_MIO37_501	B9	USB Data Bit5
OTG_DATA6	PS_MIO38_501	F10	USB Data Bit6
OTG_DATA7	PS_MIO39_501	C10	USB Data Bit7
OTG_RESETN	PS_MIO8_500	E18	USB Reset Signal

3.4 HDMI Output Interface

The HDMI output interface is implemented by Silion Image's SIL9134 HDMI (DVI) encoding chip, which supports up to 1080P@60Hz output and supports 3D output.

Among them, the SIL9134 video digital interface, audio digital interface and I2C configuration interface are connected with the BANK34/35 IO of the ZYNQ7000 PL part. The ZYNQ7000 system initializes and controls the SIL9134 through the I2C pin. The hardware connection diagram of SIL9134 chip and ZYNQ7000 is shown in Figure

3-4-1.

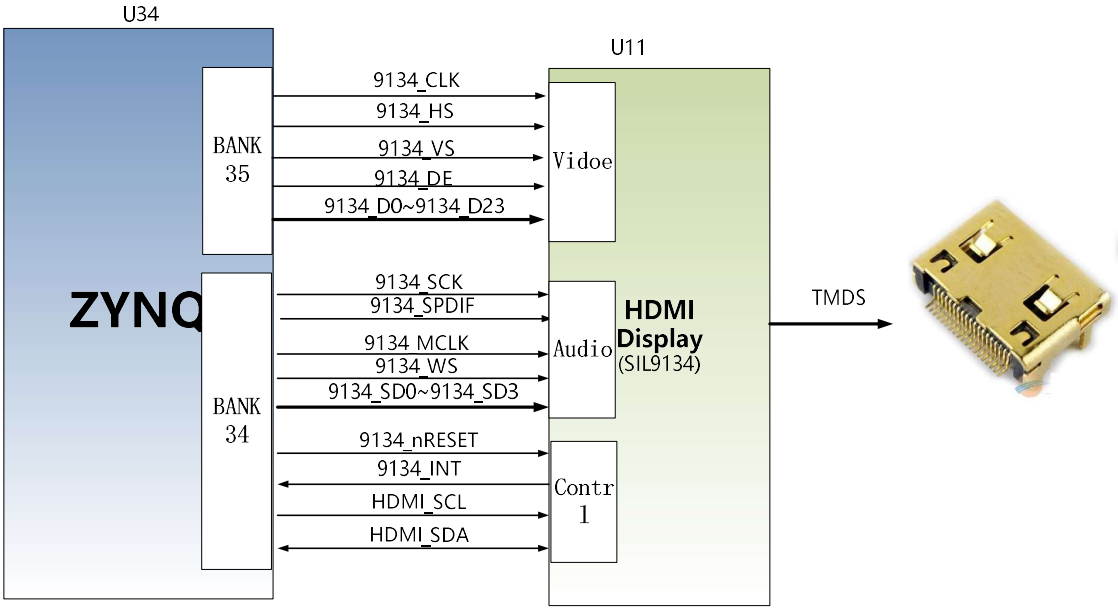

Figure3-4- 1: The hardware connection of SIL9134 chip and ZYNQ7000

ZYNQ Pin Assignment:

Signal Name	ZYNQ Pin Name	ZYNQ Pin No.	Description
9134_CLK	B35_L24_P	H1	9134 video signal clock
9134_HS	B35_L21_P	E4	9134 video signal line synchronization
9134_VS	B35_L21_N	E3	9134 video signal column synchronization
9134_DE	B35_L22_N	G2	9134 video signal Enable
9134_D[0]	B35_L22_P	G3	9134 Video Signal Data 0
9134_D[1]	B35_L19_N	H3	9134 Video Signal Data 1
9134_D[2]	B35_L19_P	H4	9134 Video Signal Data 2
9134_D[3]	B35_L4_N	G7	9134 Video Signal Data 3
9134_D[4]	B35_L4_P	G8	9134 Video Signal Data 4
9134_D[5]	B35_L24_N	G1	9134 Video Signal Data 5
9134_D[6]	B35_IO25	H5	9134 Video Signal Data 6
9134_D[7]	B35_IO0	H6	9134 Video Signal Data 7
9134_D[8]	B35_L20_P	G4	9134 Video Signal Data 8
9134_D[9]	B35_L20_N	F4	9134 Video Signal Data 9
9134_D[10]	B35_L5_P	F5	9134 Video Signal Data 10
9134_D[11]	B35_L5_N	E5	9134 Video Signal Data 11
9134_D[12]	B35_L6_P	G6	9134 Video Signal Data 12

9134_D[13]	B35_L6_N	F6	9134 Video Signal Data 13
9134_D[14]	B35_L1_N	E7	9134 Video Signal Data 14
9134_D[15]	B35_L1_P	F7	9134 Video Signal Data 15
9134_D[16]	B35_L14_P	D3	9134 Video Signal Data 16
9134_D[17]	B35_L14_N	C3	9134 Video Signal Data 17
9134_D[18]	B35_L12_N	C4	9134 Video Signal Data 18
9134_D[19]	B35_L12_P	D5	9134 Video Signal Data 19
9134_D[20]	B35_L11_N	C5	9134 Video Signal Data 20
9134_D[21]	B35_L11_P	C6	9134 Video Signal Data 21
9134_D[22]	B35_L3_P	E8	9134 Video Signal Data 22
9134_D[23]	B35_L3_N	D8	9134 Video Signal Data 23
9134_SCK	B34_L2_N	J6	9134 Audio Interface I2S Clock
9134_SPDIF	B34_L21_N	N3	9134 Audio S/PDIF Input
9134_MCLK	B34_L21_P	N4	9134 Audio Input Master clock
9134_WS	B34_L2_P	J7	9134 Audio Interface I2S Word Selection
9134_SD0	B34_L19_N	N5	9134 Audio Interface I2S Data
9134_SD1	B34_L19_P	N6	9134 Audio Interface I2S Data
9134_SD2	B34_L13_N	T1	9134 Audio Interface I2S Data
9134_SD3	B34_L13_P	T2	9134 Audio Interface I2S Data
9134_nRESET	B34_L12_N	L4	9134 Reset Signal
9134_INT	B34_L12_P	L5	9134 Interrupt Signal
HDMI_SCL	B34_L1_P	J8	9134 IIC Control Clock
HDMI _SDA	B34_L1_N	K8	9134 IIC Control Data

3.5 HDMI Input Interface

The HDMI input interface uses Silion Image's SIL9013 HDMI decoder chip, which supports up to 1080P@60Hz input and supports data output in different formats. Among them, the IIC configuration interface of SIL9013 is connected with the IO of FPGA BANK13. ZYNQ initializes and controls the SIL9013 through I2C bus programming. The hardware connection of HDMI input interface is shown in Figure 3-5-1.

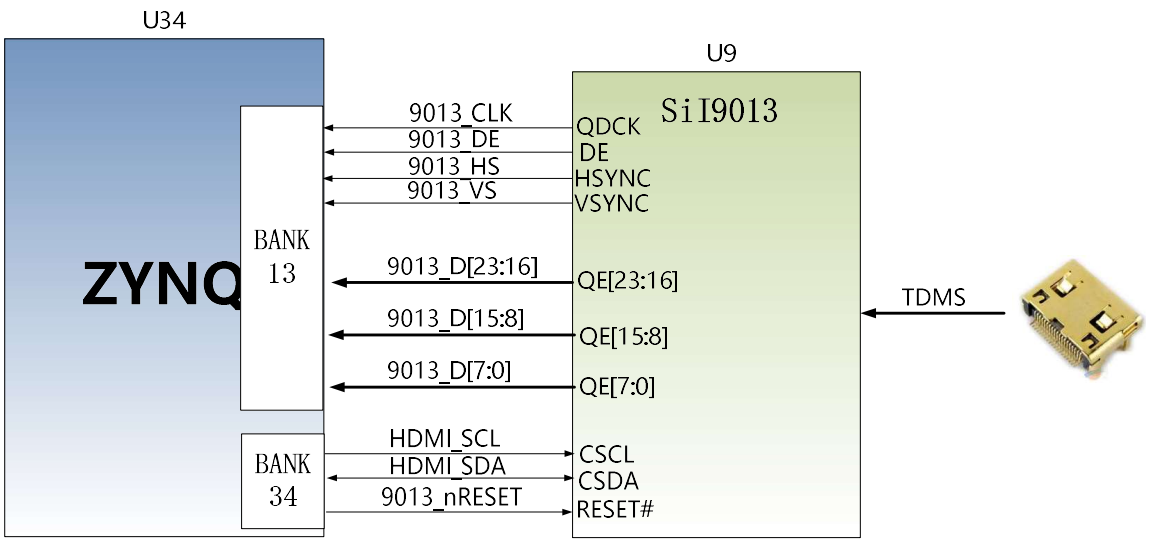

Figure 3-5- 1: The hardware connection of SIL9013 chip and ZYNQ7000

ZYNQ Pin Assignment:

Signal Name	ZYNQ Pin Name	ZYNQ Pin No.	Description
9013_nRESET	B34_L16_N	P1	9013 Reset Signal
9013_CLK	B13_L14_P	AA16	9013 Video signal clock
9013_HS	B13_L20_P	U19	9013 Video signal line synchronization
9013_VS	B13_L22_N	U18	9013 Video signal column synchronization
9013_DE	B13_L20_N	V19	9013Video signal Enable
9013_D[0]	B13_L22_P	U17	9013 Video Signal Data 0
9013_D[1]	B13_L23_P	V16	9013 Video Signal Data 1
9013_D[2]	B13_L23_N	W16	9013 Video Signal Data 2
9013_D[3]	B13_L14_N	AA17	9013 Video Signal Data 3
9013_D[4]	B13_L13_N	Y19	9013 Video Signal Data 4
9013_D[5]	B13_L13_P	Y18	9013 Video Signal Data 5
9013_D[6]	B13_L11_N	AA15	9013 Video Signal Data 6
9013_D[7]	B13_L11_P	AA14	9013 Video Signal Data 7
9013_D[8]	B13_L17_P	AB16	9013 Video Signal Data 8
9013_D[9]	B13_L17_N	AB17	9013 Video Signal Data 9
9013_D[10]	B13_L16_N	AB19	9013 Video Signal Data 10
9013_D[11]	B13_L16_P	AB18	9013 Video Signal Data 11
9013_D[12]	B13_L12_N	Y15	9013 Video Signal Data 12
9013_D[13]	B13_IO25	U16	9013 Video Signal Data13
9013_D[14]	B13_L1_N	V14	9013 Video Signal Data 14

9013_D[15]	B13_L1_P	V13	9013 Video Signal Data 15
9013_D[16]	B13_L7_N	AB11	9013 Video Signal Data 16
9013_D[17]	B13_L7_P	AA11	9013 Video Signal Data 17
9013_D[18]	B13_L4_P	V11	9013 Video Signal Data 18
9013_D[19]	B13_L4_N	W11	9013 Video Signal Data 19
9013_D[20]	B13_L3_P	W12	9013 Video Signal Data 20
9013_D[21]	B13_L3_N	W13	9013 Video Signal Data 21
9013_D[22]	B13_L5_N	U12	9013 Video Signal Data 22
9013_D[23]	B13_L5_P	U11	9013 Video Signal Data 23
HDMI_SCL	B34_L1_P	J8	9013 IIC Control Clock
HDMI _SDA	B34_L1_N	K8	9013 IIC Control Data

3.6 SFP Interface

The AX7015B expansion board has two optical interfaces. Users can purchase optical modules (1.25G, 2.5G optical modules on the market) and insert them into these two optical interfaces for optical data communication. The two fiber interfaces are connected to the two RX/TXs of the ZYNQ GTP transceiver. The TX signal and the RX signal are connected to the ZYNQ and the optical module through a DC blocking capacitor in a differential signal mode.

Each TX transmit and RX receive data rate is as high as 6.125 Gb/s. The reference clock for the GTP transceiver is provided by a 125M differential crystal on the core board.

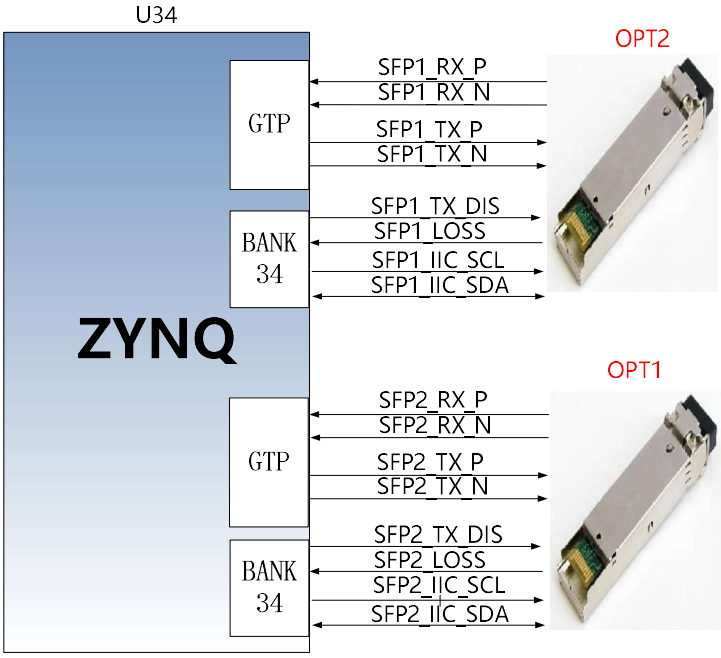

Figure 3-6-1: The schematic diagram of FPGA and Fiber Interface

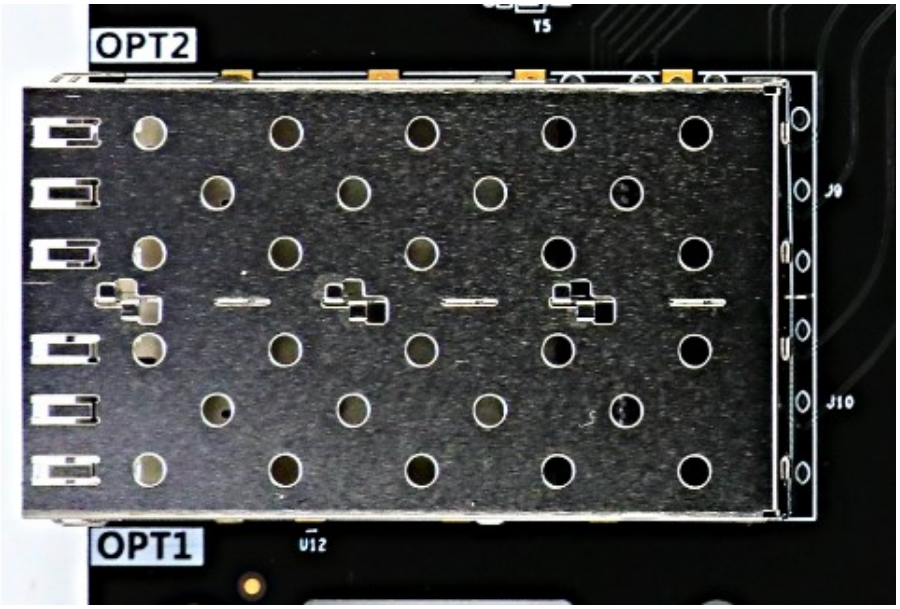

Figure 3-6-2: The 2-Port Fiber Interface on the Expansion Board

OPT2 fiber interface ZYNQ pin assignment is as follows:

Net Name	ZYNQ Pin	Description
SFP1_TX_P	W2	SFP Module Data Transmission Positive
SFP1_TX_N	Y2	SFP Module Data Transmission Negative
SFP1_RX_P	W6	SFP Module Data Receive Positive
SFP1_RX_N	Y6	SFP Module Data Receive Negative
SFP1_TX_DIS	U1	SFP Module Transmission Prohibition High Level Active
SFP1_LOSS	U2	SFP Receives LOSS signal, High Indicates No optical signal received
SFP1_IIC_SCL	K7	SFP module DDMI I2C clock
SFP1_IIC_SDA	L7	SFP module DDMI I2C Data

Note: The above pins are defined as the screen printed OPT2 fiber optic interface on the AX7015B Carrier PCB board.

OPT1 fiber interface ZYNQ pin assignment is as follows:

Net Name	ZYNQ Pin	Description
SFP2_TX_P	AA5	SFP Module Data Transmission Positive
SFP2_TX_N	AB5	SFP Module Data Transmission Negative
SFP2_RX_P	AA9	SFP Module Data Receive Positive
SFP2_RX_N	AB9	SFP Module Data Receive Negative
SFP2_TX_DIS	K2	SFP Module Transmission Prohibition

		High Level Active
SFP2_LOSS	K5	SFP Receives Loss signal, High Indicates No optical signal received
SFP2_IIC_SCL	J5	SFP module DDMI I2C clock
SFP2_IIC_SDA	J3	SFP module DDMI I2C Data

Note: The above pins are defined as the screen printed OPT1 fiber optic interface on the AX7015B Carrier PCB board.

3.7 PCIe x2 Interface

The AX7015B expansion board provides an industrial-grade, high-speed data transfer PCIe x2 interface, that meets the standard PCIe card electrical specifications, and can be used directly on the PCIe slot of computer.

The transmission and receive signals of the PCIe interface are directly connected to the GTP transceiver of the FPGA. The 2-channel TX signal and RX signal are connected to the FPGA in differential signal mode, and the single-channel communication rate can be up to 5G bit bandwidth. The PCIe reference clock is provided to the FPGA development board by the PCIe slot of the computer with a reference clock frequency of 100Mhz.

The PCIe interface design of the FPGA development board is shown in Figure 3-7-1, where the TX transmit signal and the reference clock CLK signal are connected in AC-coupled mode.

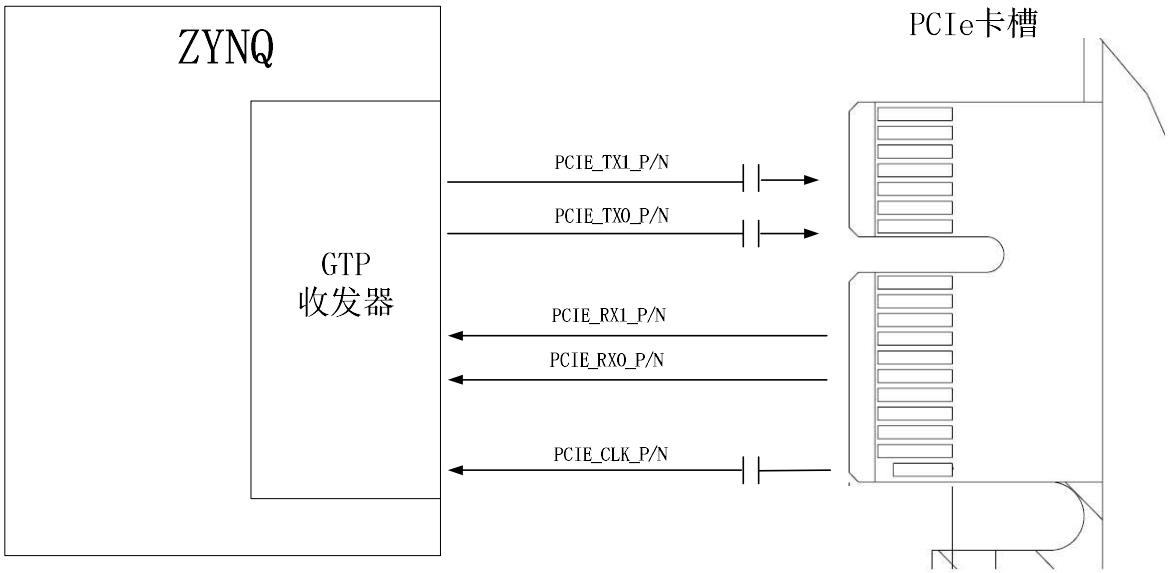

Figure 3-7-1: The PCIe Interface Design

PCIe x2 interface FPGA pin assignments are as follows:

Net Name	FPGAPin	Description
PCIE_RX0_P	W8	PCIE Channel 0 Data Receive Positive
PCIE_RX0_N	Y8	PCIE Channel 0 Data Receive Negative
PCIE_RX1_P	AA7	PCIE Channel 1 Data Receive Positive
PCIE_RX1_N	AB7	PCIE Channel 1 Data Receive Negative
PCIE_TX0_P	W4	PCIE Channel 0 Data Transmit Positive
PCIE_TX0_N	Y4	PCIE Channel 0 Data Transmit Negative
PCIE_TX1_P	AA3	PCIE Channel 1 Data Transmit Positive
PCIE_TX1_N	AB3	PCIE Channel 1 Data Transmit Negative
PCIE_CLK_P	U9	The Reference Clock of PCIE Positive
PCIE_CLK_N	V9	The Reference Clock of PCIE Negative

Figure 3-7-2: The PCIe Interface on the Expansion Board

3.8 USB to Serial Port

The AX7015B expansion board is also equipped with a serial port interface for overall debugging of the ZYNQ7000 system. The conversion chip uses the USB- UAR chip of Silicon Labs CP2102GM. The USB interface uses the MINI USB interface. It can be connected to the USB of the PC with a USB cable. The port performs separate power supply and serial data communication of the core board.

Figure 3-8-1 detailed the schematic diagram of the USB Uart circuit design.

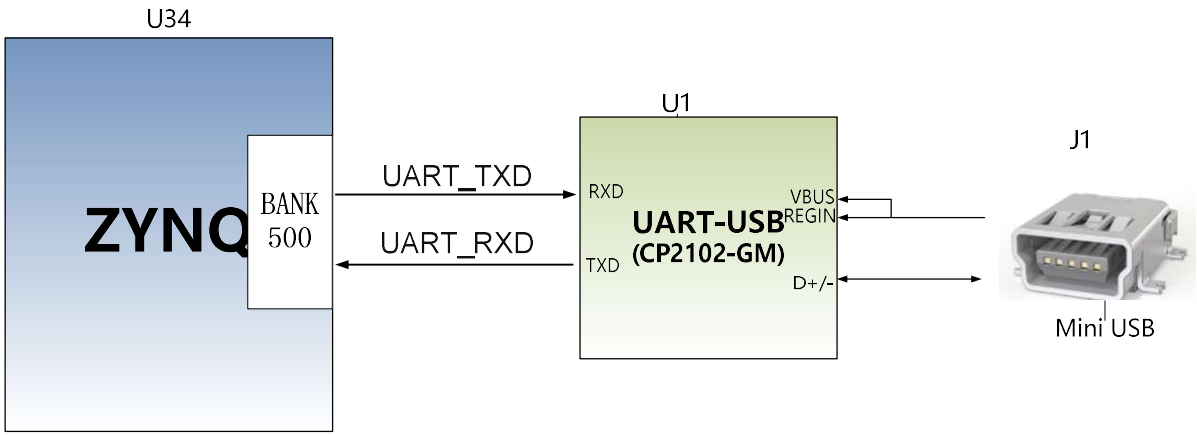

Figure 3-8-1: USB Uart Circuit Design

ZYNQ Pin Assignment for UART to Serial Port:

Signal Name	ZYNQ Pin Name	ZYNQ Pin NO.	Description
UART_RXD	PS_MIO13_500	A17	Uart Data Input
UART_TXD	PS_MIO12_500	C18	Uart Data Output

3.9 SD Card Slot

The AX7015B carrier board contains a Micro SD card interface to provide user access to the SD card memory, the BOOT program for the ZYNQ chip, the Linux operating system kernel, the file system and other user data files.

The SDIO signal is connected to the IO signal of the PS BANK501 of ZYNQ. Since the VCCMIO of the BANK is set to 1.8V, but the data level of the SD card is 3.3V, connected through the TXS02612 level shifter. The schematic of the Zynq7000 PS and SD card connector is shown in Figure 3-9-1:

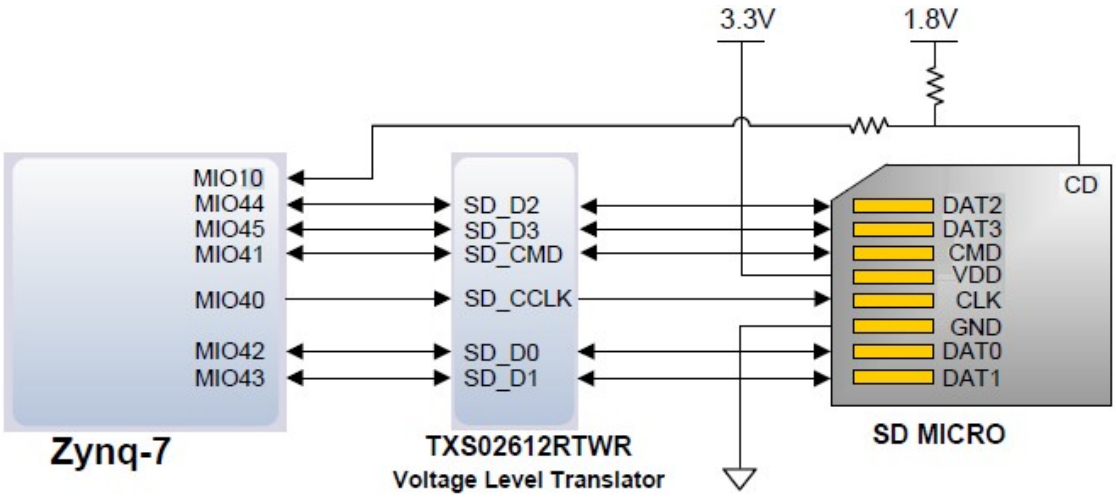

Figure 3-9-1: SD Card Connection Diagram

SD card slot pin assignment:

Signal Name	ZYNQ Pin Name	ZYNQ Pin No.	Description
SD_CLK	PS_MIO40	E9	SD Clock Signal
SD_CMD	PS_MIO41	C15	SD Command Signal
SD_D0	PS_MIO42	D15	SD Date0

SD_D1	PS_MIO43	B12	SD Data1
SD_D2	PS_MIO44	E10	SD Data2
SD_D3	PS_MIO45	B14	SD Data3
SD_CD	PS_MIO10	G16	SD Card Insertion Signal

3.10 JTAG Interface

The JTAG interface is reserved on the AX7015B expansion board, for downloading FPGA programs or firmware to FLASH. In order to prevent damage to the FPGA chip caused by hot plugging, a protection diode is added to the JTAG signal to ensure that the signal voltage is within the range accepted by the FPGA to avoid damage to the FPGA.

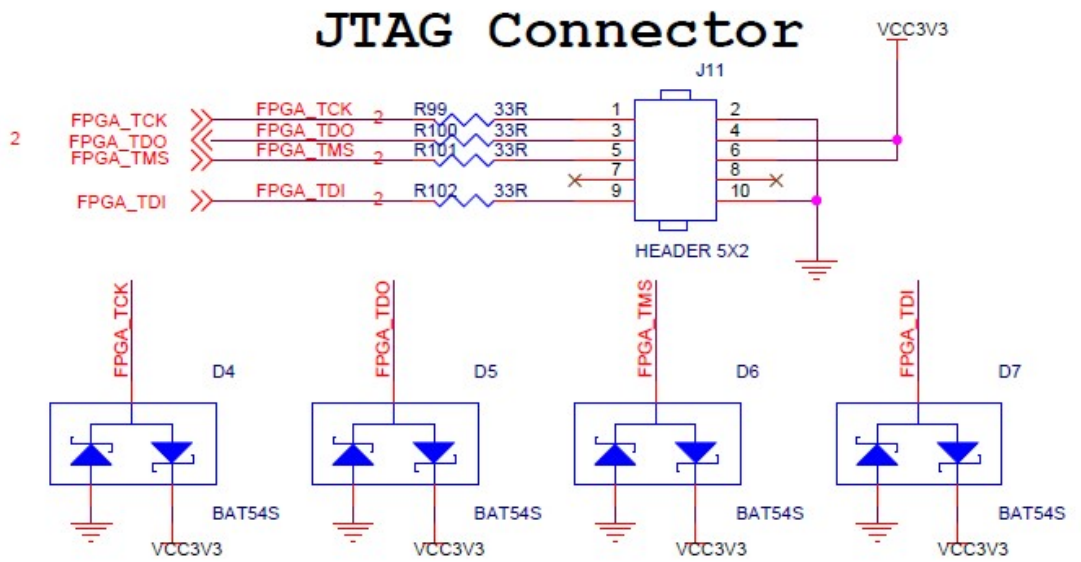

Figure 3-10-1: JTAG Interface Schematic

The figure 3-10-2 detailed the JTAG interface on the expansion board. Users can connect the PC and JTAG interface for ZYNQ system debugging through the USB downloader we provided. Be careful not to hot plug the JTAG cable when it is plugged or unplugged. Be careful not to hot plug the JTAG cable.

Figure 3-10-2: JTAG Interface on the Expansion Board

3.11 LED Light

The AX7015B has six red LEDs on the expansion board, one of which is the power indicator (PWR) and five of which are user LEDs (LED1~LED4). When the expansion board is powered, the power indicator will light up; one user LEDs are connected to the MIO of the PS, and the other four are connected to the IO of the PL. The user can control the light on and off by the program. When the IO voltage is high, the user LED is off, and when the connection IO voltage is low, the user LED is illuminated. The schematic diagram of the LED light hardware connection is shown in Figure 3-11-1:

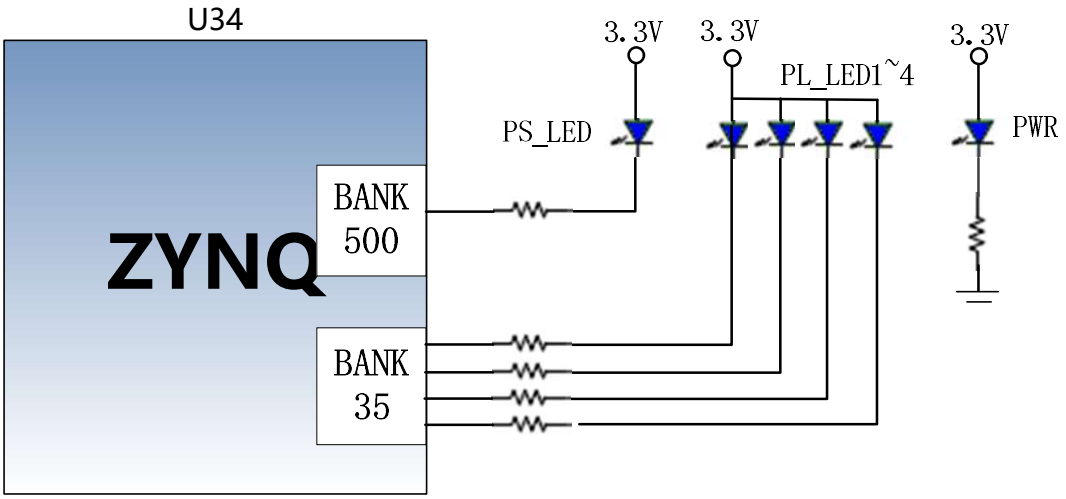

Figure 3-11-1: LED hardware connection Diagram on the Expansion Board

Pin assignment for user LEDs on Expansion Board

Signal Name	ZYNQ Pin Name	ZYNQ Pin No.	Description
PS_LED	PS_MIO9_500	C19	PS end user LED
PL_LED1	B35_L10_P	A5	PL end user LED1
PL_LED2	B35_L9_P	A7	PL end user LED2
PL_LED3	B35_L9_N	A6	PL end user LED3
PL_LED4	B35_L7_N	B8	PL end user LED4

3.12 User Button

The AX7015B has two user buttons PS KEY and PL KEY on the expansion board. PS KEY is connected to the MIO pin of the ZYNQ chip PS, and PL KEY is connected to the IO pin of the ZYNQ chip PL. When the button is pressed, the signal is low, and the ZYNQ chip detects a low level to determine whether the button is pressed. The schematic diagram of the user button connection is shown in Figure 3-12-1:

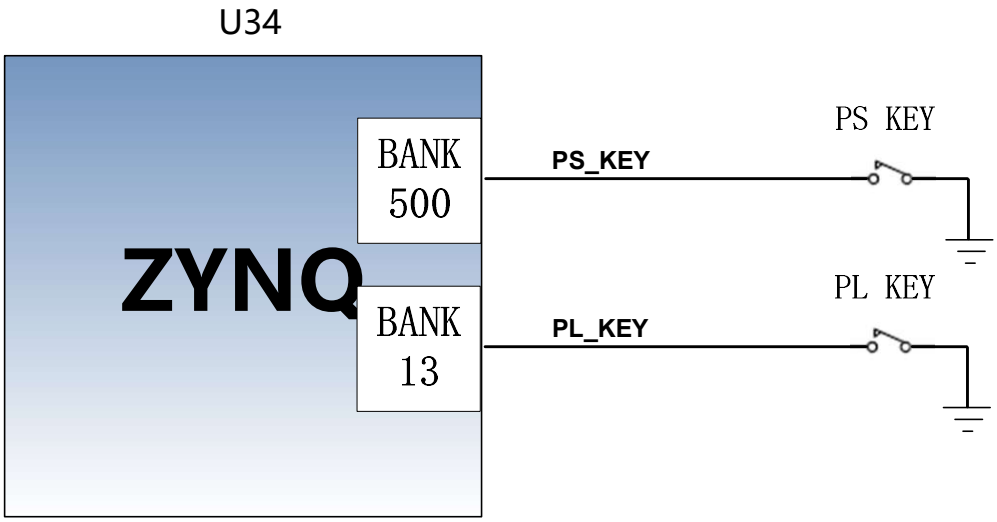

Figure 3-12-1: The Schematic Diagram of the User Button

ZYNQ Pin Assignment for User Buttons:

Signal Name	ZYNQ Pin Name	ZYNQ Pin No.	Description
PS_KEY	PS_MIO11_500	B19	ZYNQ System Reset Signal
PL_KEY	B13_L8_N	AB12	ZYNQ System Reset Signal

3.13 Expansion Port

The AX7015B carrier board is reserved one 2.54-mm standard 40-pin expansion ports J12, for connecting various modules of ALINX or external circuits designed by the user. The expansion port has 40 signals, of which 1 channel is 5V power supply. 2 channels are 3.3V power supplies, 3 ground, 34 IO ports. **Do not connect the IO directly to a 5V device to avoid burning the ZYNQ7000 chip. If you want to connect a 5V device, you need to connect a level shifting chip.**

The circuit of the expansion port (J12) is shown in Figure 3-13-1.

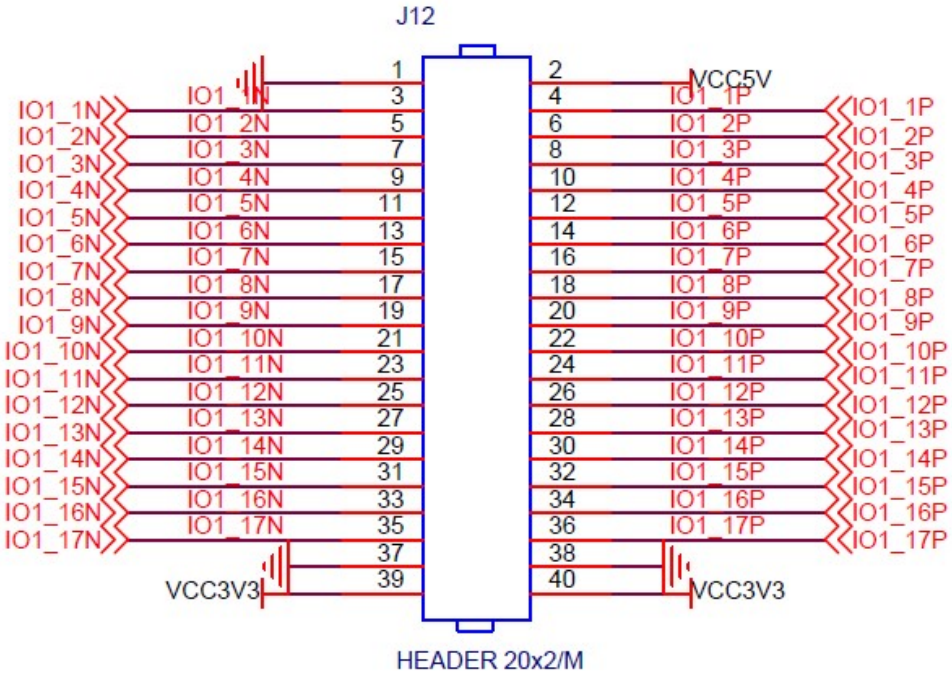

Figure 3-13-1: The circuit of the expansion port (J12)

ZYNQ J12 Expansion Port Pin Assignment

Pin No.	ZYNQ Pin	Pin No.	ZYNQ Pin
1	GND	**2**	+5V (Output)
3	M1	**4**	M2
5	Y13	**6**	Y12
7	P2	**8**	P3
9	R7	**10**	P7
11	P8	**12**	N8
13	R2	**14**	R3
15	R4	**16**	R5
17	M7	**18**	M8

19	M3	**20**	M4
21	U14	**22**	U13
23	AB14	**24**	AB13
25	W15	**26**	V15
27	Y17	**28**	W17
29	W18	**30**	V18
31	AB22	**32**	AB21
33	AA20	**34**	AA19
35	T17	**36**	R17
37	GND	**38**	GND
39	+3.3V (Output)	**40**	+3.3V (Output)

3.14 Power Supply

The power input voltage of the development board is DC12V, and the board can be powered by PCIE slot or external +12V power supply. The expansion board is converted into +5V, +1.2V, +3.3V and 1.8V four-way power supply through one DC/DC power chip MP2303 and three DC/DC power chip MP1482. Because the +5V power supply supplies power to the core board through the inter-board connector, the current output of the DC power supply is 3A, and the output current of the other three power supplies is 2A. Figure 3-14-1 is the power supply design of expansion board.

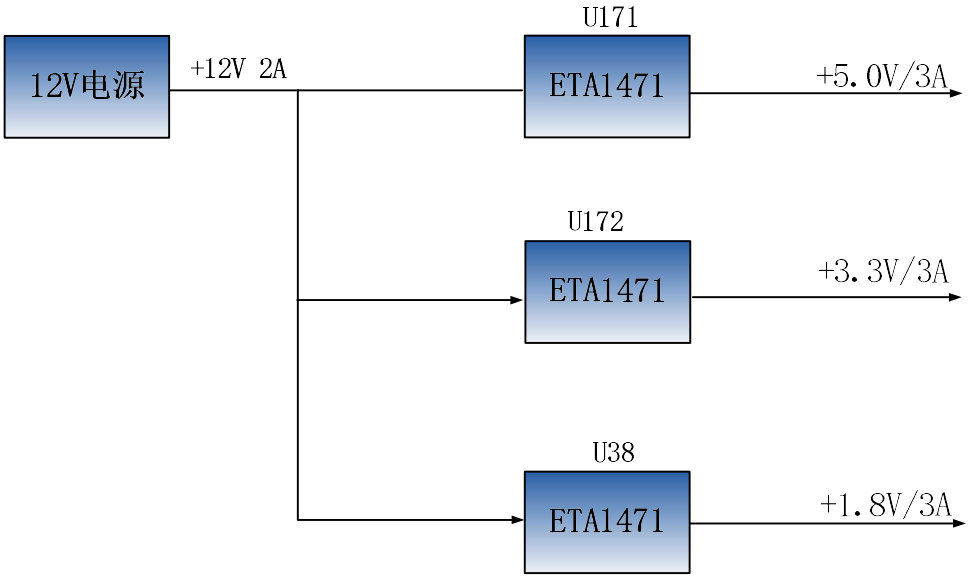

Figure 3-14-1: Power Supply Schematic of Expansion Board

3.15 Expansion Board Structure diagram

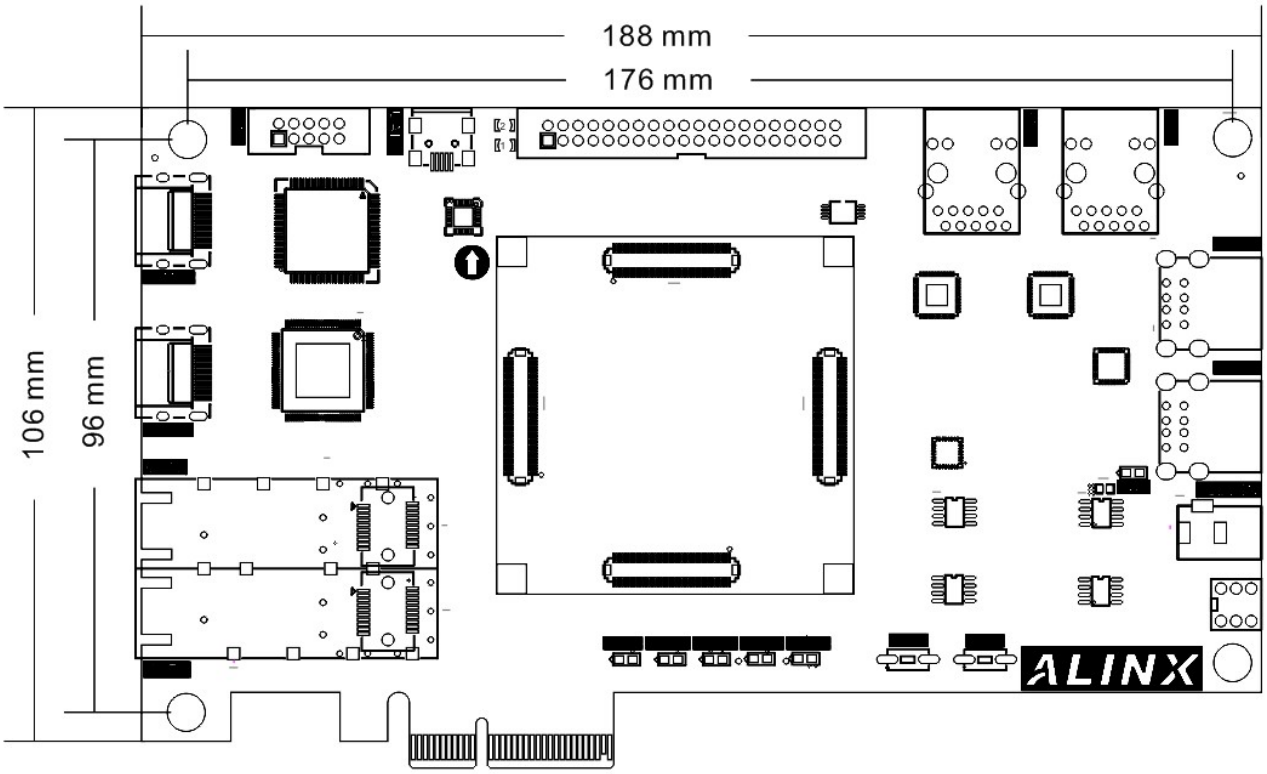

Figure 3- 15- 1: Expansion Board Structure Diagram (Top View)