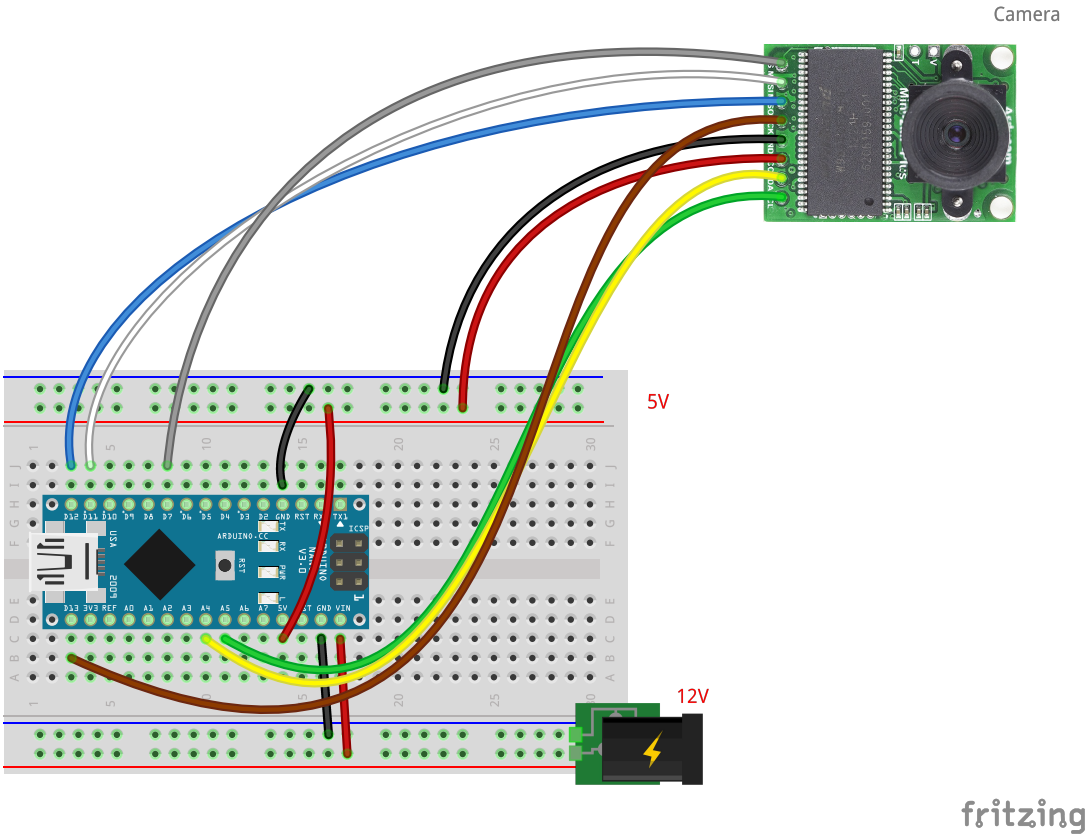
Camera
5V
12V
fritzing