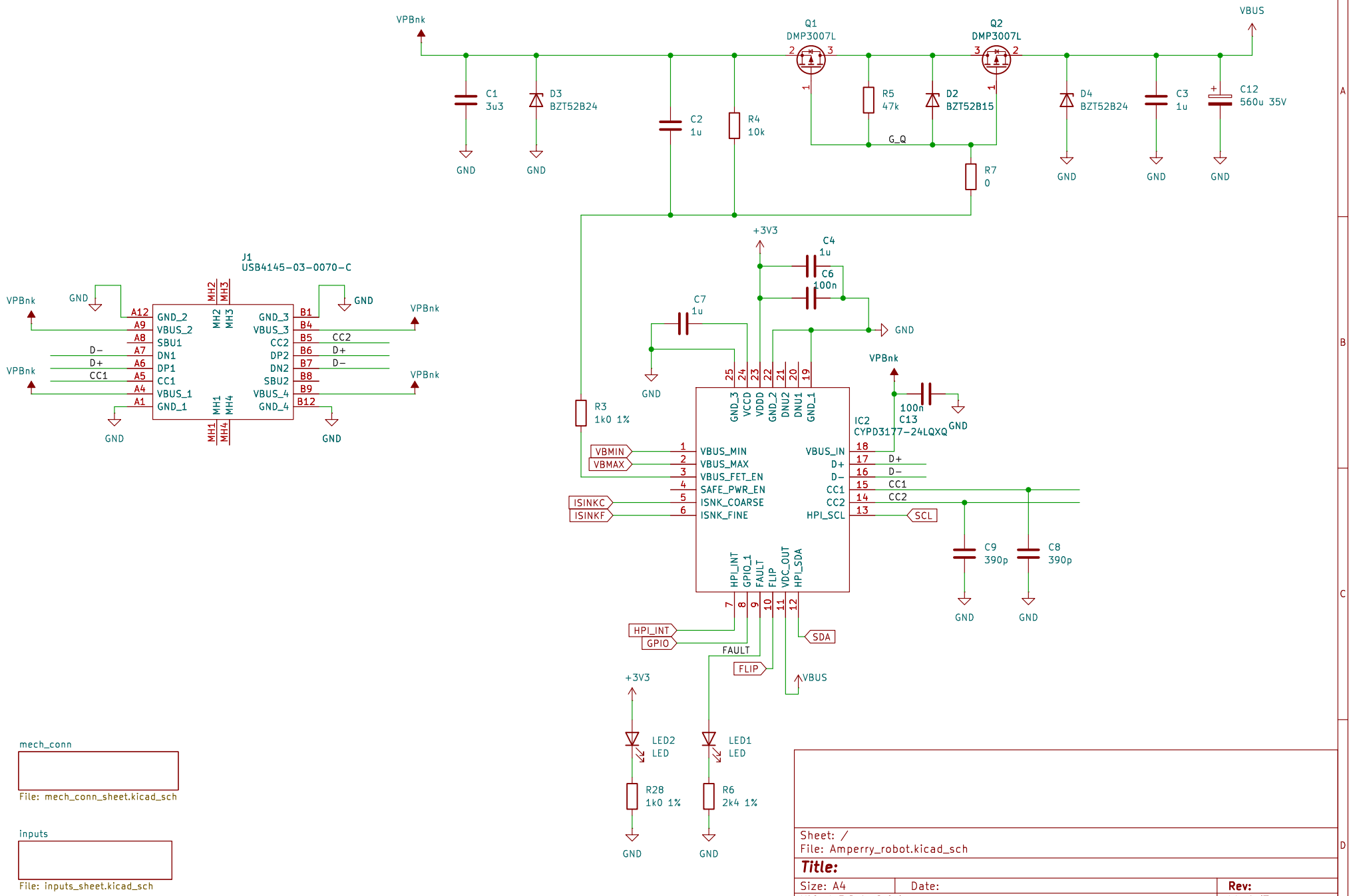

Sheet: /
File: Amperry_robot.kicad_sch

Title:

Size: A4	Date:	Rev:
KiCad E.D.A. 9.0.4		Id: 1/3

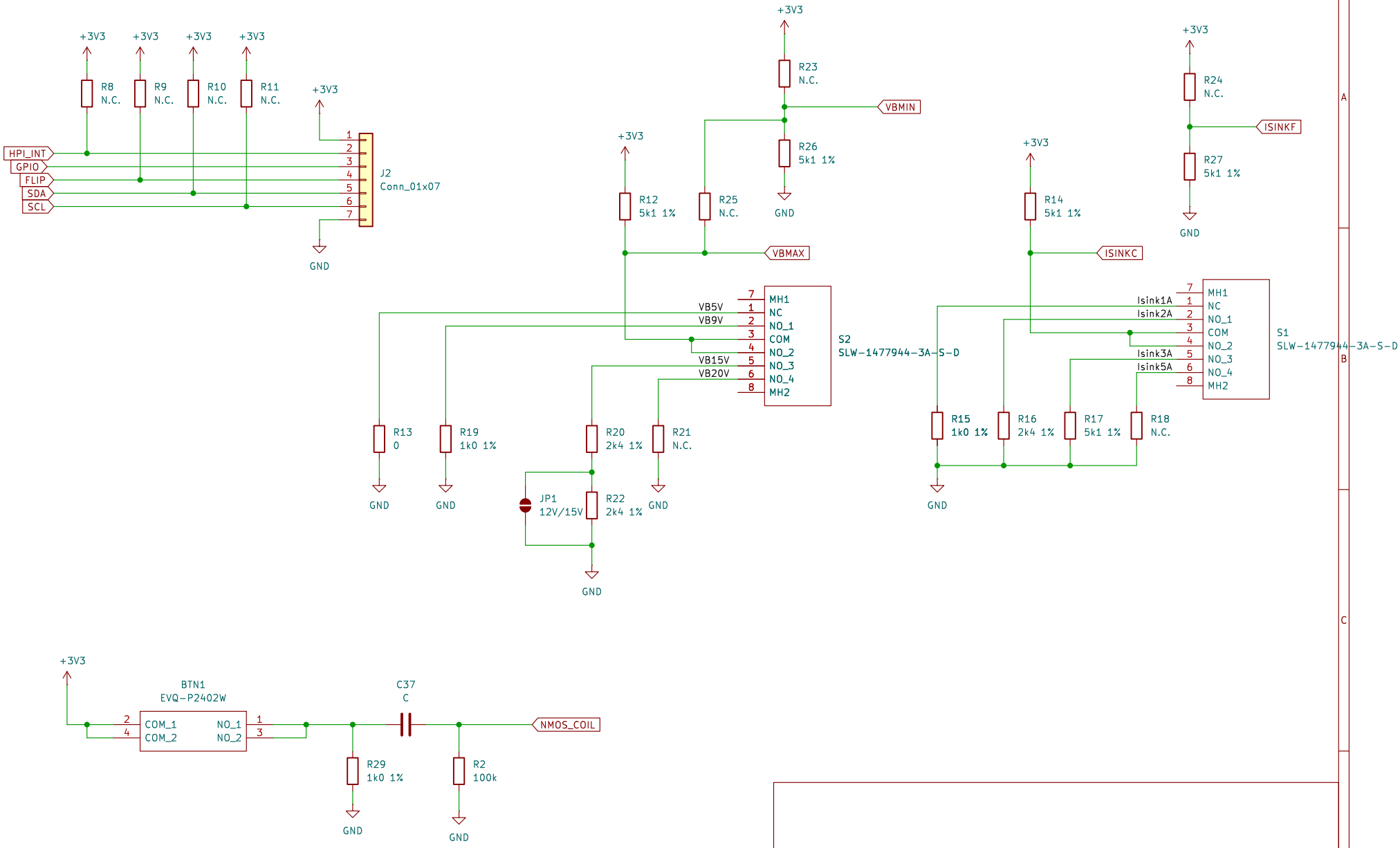

Sheet: /inputs/
File: inputs_sheet.kicad_sch

Title:

Size: A4	Date:	Rev:
KiCad E.D.A. 9.0.4		Id: 2/3

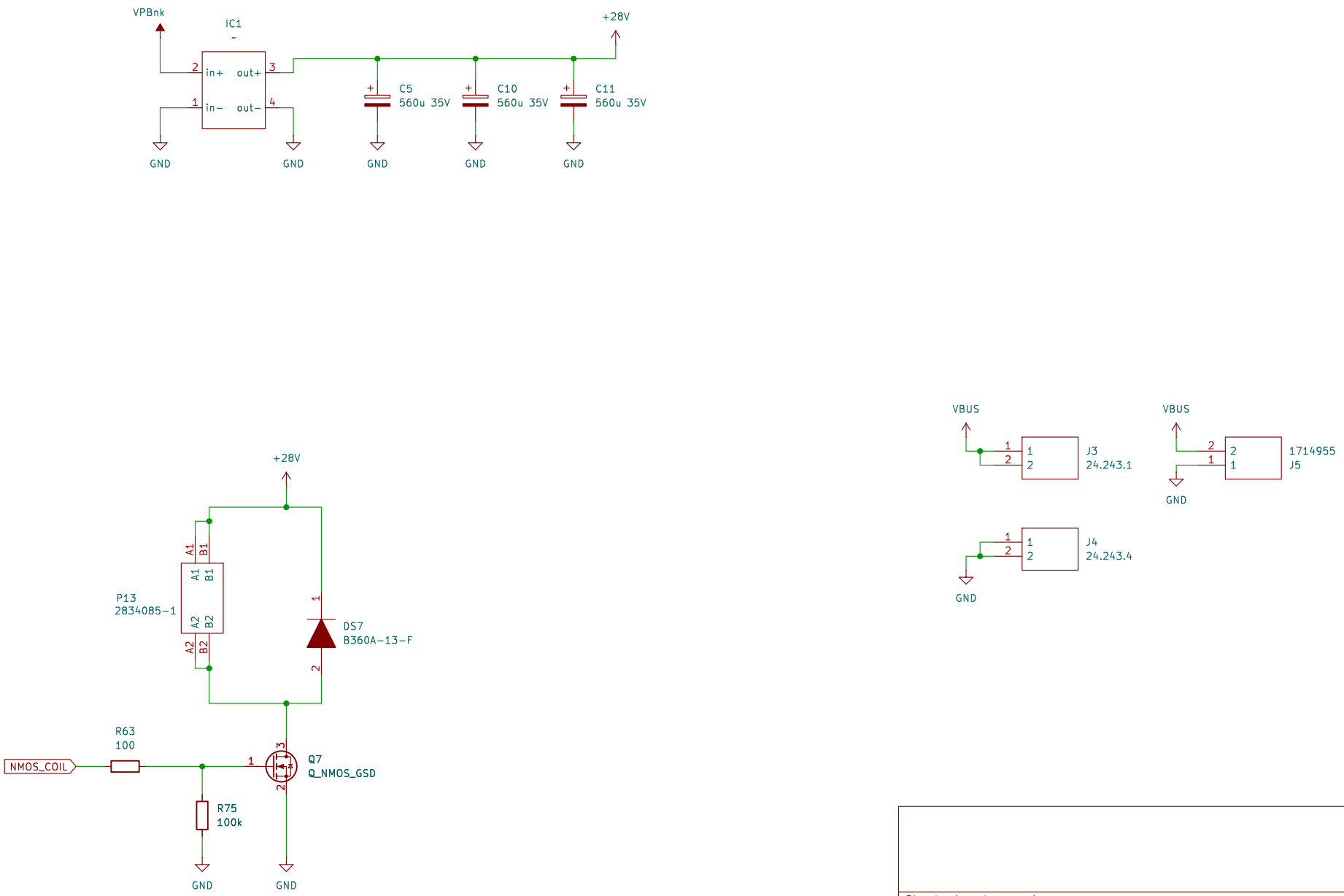

Sheet: /mech_conn/
File: mech_conn_sheet.kicad_sch

Title:

Size: A4	Date:	**Rev:**
KiCad E.D.A. 9.0.4		Id: 3/3