PowerModule

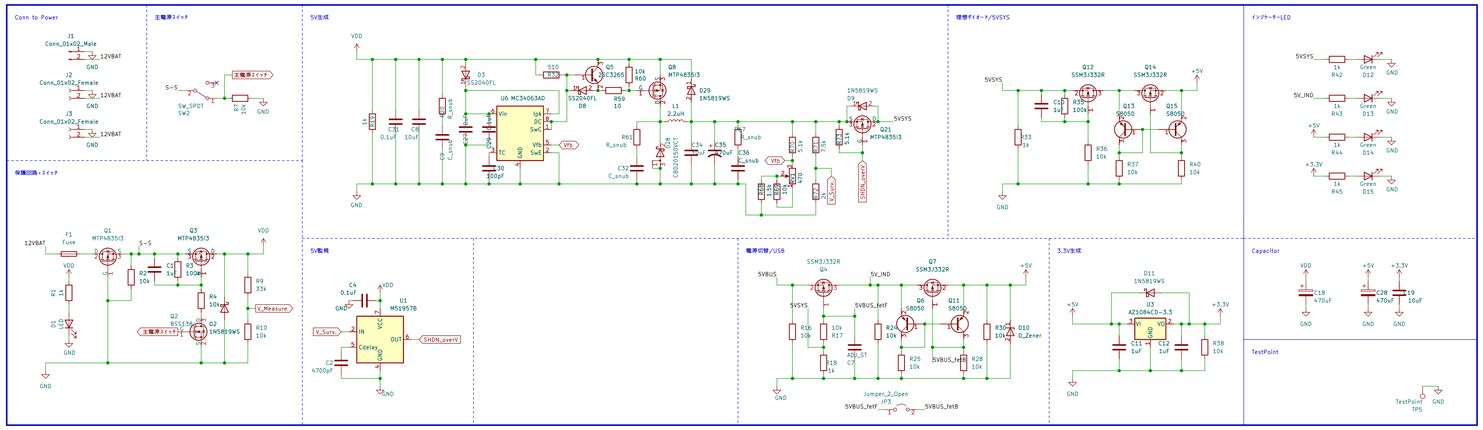

Audio

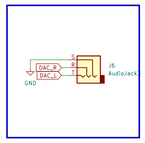

LEDTape

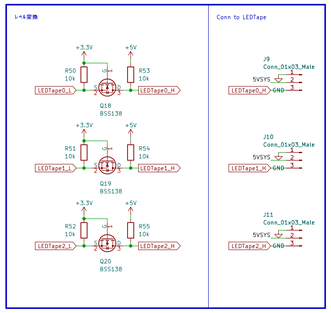

マイコン

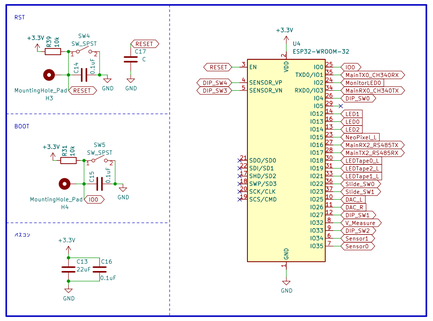

NeoPixel

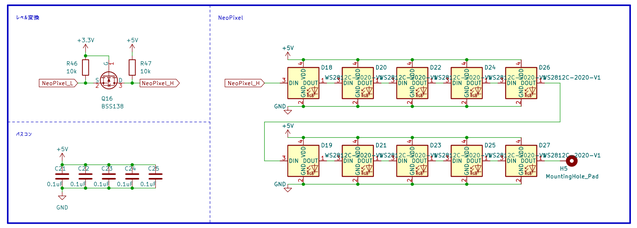

書き込み

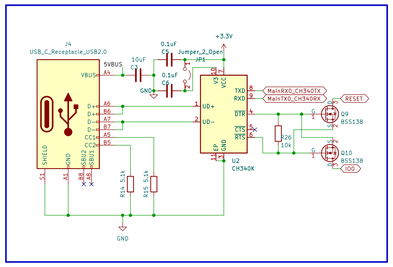

I/O

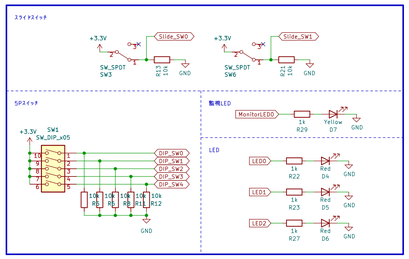

Conn to sensor

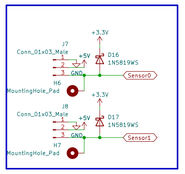

RS485

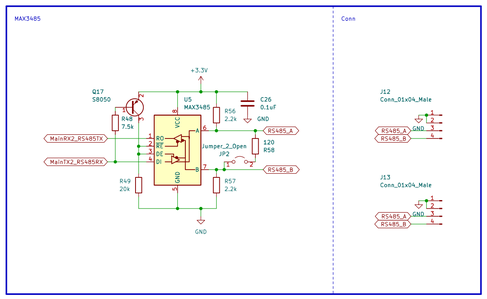

Sheet: /		
File: Pule.kicad_sch		
Title:		
Size: A1	Date:	Rev:
KiCad E.D.A. kicad (6.0.11)		Id: 1/1