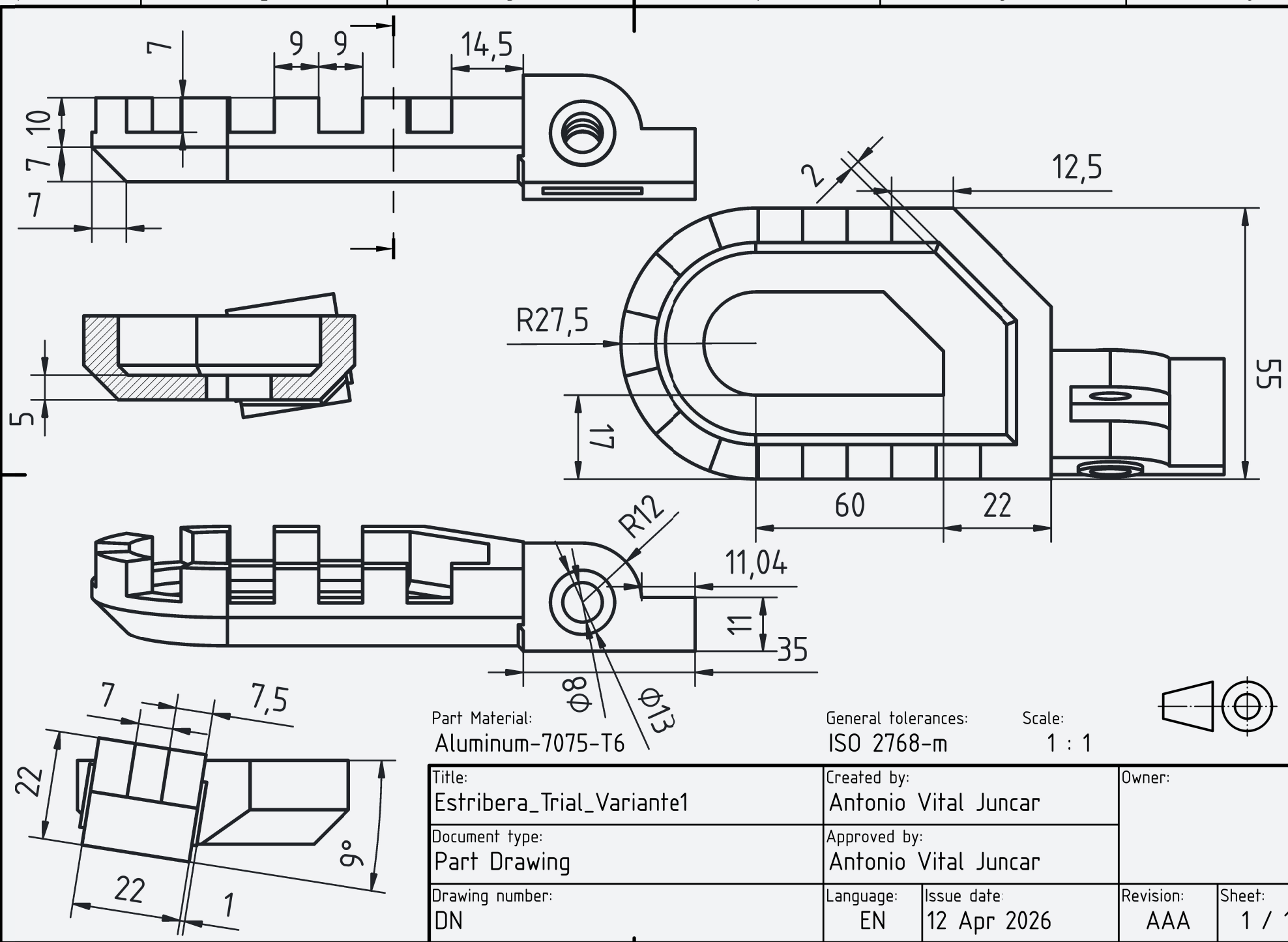

Part Material: Aluminum-7075-T6

General tolerances: ISO 2768-m

Scale: 1 : 1

Title: Estribera_Trial_Variante1	Created by: Antonio Vital Juncar		Owner:	
Document type: Part Drawing	Approved by: Antonio Vital Juncar			
Drawing number: DN	Language: EN	Issue date: 12 Apr 2026	Revision: AAA	Sheet: 1 / 1

A4