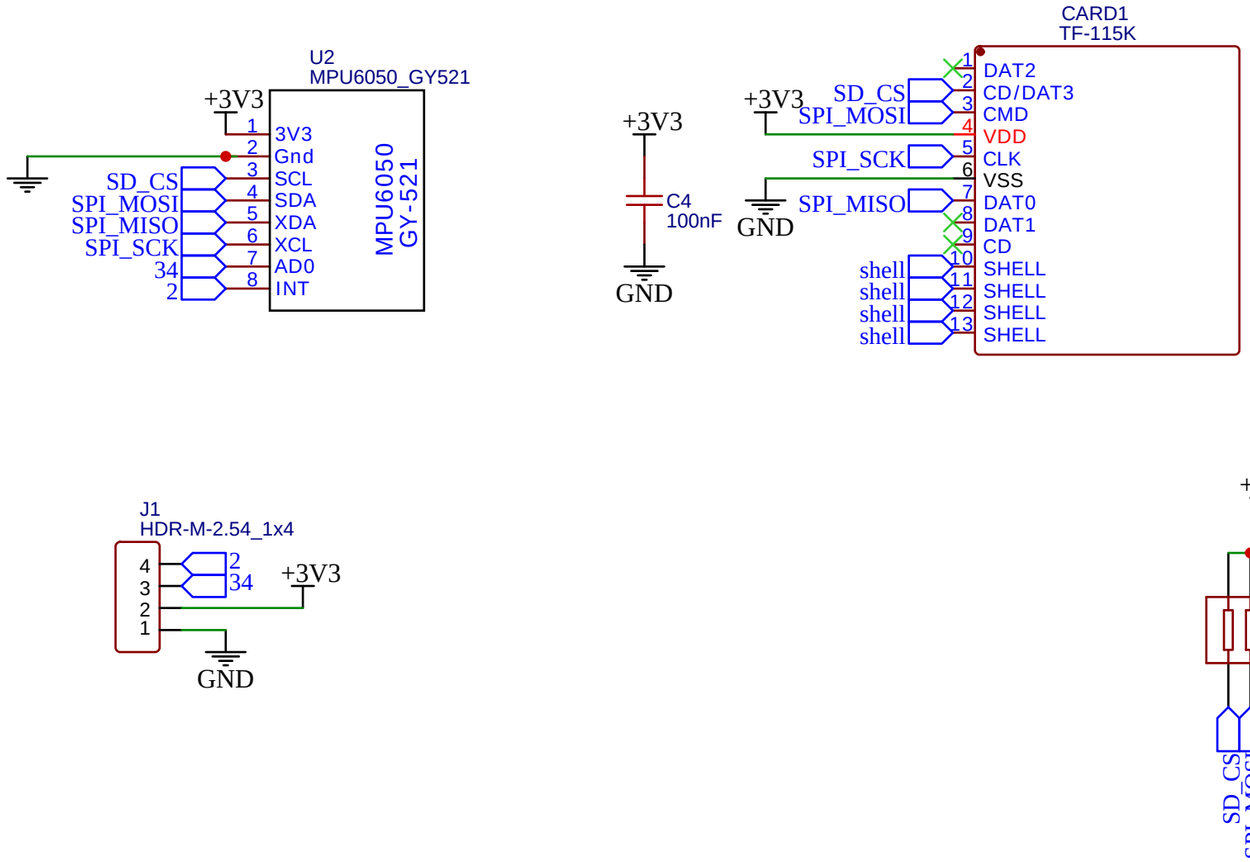

TITLE: Trinity MicroSD board		REV: 1.1
EasyEDA	Company: Brian Lough	Sheet: 1/1
	Date: 2021-04-07 Drawn By: Brian Lough	