Second edition of an international best-seller

SCHAUM'S outlines

OPERATIONS RESEARCH

Second Edition

RICHARD BRONSON GOVINDASAMI NAADIMUTHU

- The perfect aid for better grades!
- Covers all course fundamentals—supplements any class text
- 310 fully solved problems
- Hundreds of practice problems
- Ideal for self-study!

MORE THAN 30 MILLION SCHAUM'S OUTLINES SOLD

Use with these courses: ☑ Operations Research ☑ Industrial Engineering ☑ Quantitative Analysis

To Rachel and Eric from RB

and to my beloved uncle, Thiru B. Sundaram, from GN

RICHARD BRONSON is Professor of Mathematics and Computer Science in the School of Computer Science and Information Systems at Fairleigh Dickinson University. He is a past recipient of the Award for Distinguished College or University Teaching, presented annually by the New Jersey Section of the Mathematical Association of America. Dr. Bronson has numerous technical publications in applied mathematics and computer simulation of continuous systems. He is author of nine books including *Differential Equations, 2nd ed* and *Matrix Operations* in the Schaum's Outline Series.

GOVINDASAMI NAADIMUTHU is Professor and Associate Dean of Business Administration at Fairleigh Dickinson University. He received his Ph.D. in Industrial Engineering from Kansas State University. He is a registered professional engineer certified by the State Boards of New Jersey and Pennsylvania. He is a recipient of both the University Distinguished Faculty Award for Teaching and the first College of Science and Engineering Excellence in Teaching Award. Dr. Naadimuthu has served as a reviewer/referee for several books, journals, and conferences. He has numerous publications, monographs, theses, and presentations in Operations Research and related areas.

Schaum's Outline of Theory and Problems of
OPERATIONS RESEARCH

Copyright © 1997, 1982 by The McGraw-Hill Companies, Inc. All rights reserved. Printed in the United States of America. Except as permitted under the Copyright Act of 1976, no part of this publication may be reproduced or distributed in any form or by any means, or stored in a data base or retrieval system, without the prior written permission of the publisher.

3 4 5 6 7 8 9 10 11 12 13 14 15 16 17 18 19 20 BAW BAW 9 0 2 1 0 9

ISBN 0-07-008020-8

Sponsoring Editor: Barbara Gilson
Production Supervisor: Claire Stanley
Editing Supervisor: Maureen B. Walker

Library of Congress Cataloging-in-Publication Data

Bronson, Richard
Schaum's outline of theory and problems of operations research
Richard Bronson, Govindasami Naadimuthu.—2nd ed.
p. cm.
Includes index.
ISBN 0-07-008020-8 (pbk.)
1. Operations research—Problems, exercises, etc. 2. Operations research—Outlines, syllabi, etc. I. Title.
T57.6.B76 1997
003—dc21 97-9538
CIP

McGraw-Hill
A Division of The McGraw-Hill Companies

SCHAUM'S OUTLINE OF

THEORY AND PROBLEMS

OF

OPERATIONS RESEARCH

Second Edition

•

RICHARD BRONSON, Ph.D.
Professor of Mathematics and Computer Science
Fairleigh Dickinson University

GOVINDASAMI NAADIMUTHU, Ph.D., P.E.
Professor and Associate Dean of Business Administration
Fairleigh Dickinson University

•

SCHAUM'S OUTLINE SERIES

McGRAW-HILL

New York San Francisco Washington, D.C. Auckland Bogotá Caracas Lisbon
London Madrid Mexico City Milan Montreal New Delhi
San Juan Singapore Sydney Tokyo Toronto

Preface

Operations research, which is concerned with the efficient allocation of scarce resources, is both an art and a science. The art lies in the ability to depict the concepts *efficient* and *scarce* in a well-defined mathematical model of a given situation. The science consists in the derivation of computational methods for solving such models. As with the first edition, this second edition introduces readers to both aspects of the field.

Since the optimal allocation of money, manpower, energy, or a host of other scarce factors, is of importance to decision makers in many traditional disciplines, the material in this book will be useful to individuals from a variety of backgrounds. Therefore, this outline has been designed both as a textbook for students wanting an introduction to operations research and as a reference manual from which practitioners can obtain specific procedures.

Each chapter is divided into three sections. The first deals mainly with methodology; the exception is Chapter 1, which is concerned exclusively with the modeling aspects of mathematical programming. The second section consists of completely worked out problems. Besides clarifying the techniques presented in the first section, these problems may expand them and may also provide prototype situations for understanding the art of modeling. Finally, there is a section of problems with answers through which readers can test their mastery of the material.

To meet the growing demands of the operations research courses, we added to the second edition the dual simplex method, the revised simplex method, sensitivity analysis, and the trailblazing Karmarkar algorithm. This edition also features new chapters in the areas of project planning using PERT/CPM, inventory control, and forecasting.

A background in matrix algebra is sufficient for most of the material in this book, although some differential calculus is required for the nonlinear search techniques. A first course in probability is a prerequisite for the material on PERT, inventory control, forecasting, game theory, decision theory, dynamic programming, Markov chains, and queueing.

We would be remiss in our duty if we do not thank our family members Evelyn Bronson, and Amirtha, Revathi, and Sathish Naadimuthu for their invaluable patience, understanding, and support during this project. We would like to acknowledge our respective deans—Dr. Dario Cortes of the University College and Dr. Paul Lerman of the Samuel J. Silberman College of Business Administration—for their support of this book. We are also grateful to the graduate business assistants—Adisreenivasa Reddy Bannuru, Luisella Basso, Sanjay Bhatnagar, Snehal Daterao, Ricardo De Bedout, Tori Franc, Ramesh Naropanth, In-Jae Park, Nazim Tagiev, and Yue-Ling Yu—for their assistance in the preparation of the manuscript. We are particularly indebted to the editorial and production staff of Professional Book Group/McGraw-Hill for their help in bringing this project to fruition.

RICHARD BRONSON
GOVINDASAMI NAADIMUTHU

Copyrighted Material

Contents

Chapter 1 **MATHEMATICAL PROGRAMMING** 1
Optimization problems. Linear programs. Integer programs. Quadratic programs. Problem formulation. Solution convention.

Chapter 2 **LINEAR PROGRAMMING: BASIC CONCEPTS** 18
Nonnegativity conditions. Slack variables and surplus variables. Generating an initial feasible solution. Penalty costs. Standard form. Linear dependence and independence. Convex combinations. Convex sets. Extreme-point solutions. Basic feasible solutions.

Chapter 3 **LINEAR PROGRAMMING: THE SIMPLEX AND THE DUAL SIMPLEX METHODS** 32
The simplex tableau. A tableau simplification. The simplex method. Modifications for programs with artificial variables. The dual simplex method.

Chapter 4 **LINEAR PROGRAMMING: DUALITY AND SENSITIVITY ANALYSIS** 56
Symmetric duals. Dual solutions. Unsymmetric duals. Sensitivity analysis.

Chapter 5 **LINEAR PROGRAMMING: EXTENSIONS** 87
The revised simplex method. Karmarkar's algorithm. Summary of Karmarkar's iterative procedure. Transforming a linear programming problem into Karmarkar's special form.

Chapter 6 **INTEGER PROGRAMMING: BRANCH-AND-BOUND ALGORITHM** 124
First approximation. Branching. Bounding. Computational considerations.

Chapter 7 **INTEGER PROGRAMMING: CUT ALGORITHMS** 133
The Gomory algorithm. Computational considerations.

Chapter 8 **INTEGER PROGRAMMING: THE TRANSPORTATION ALGORITHM** 140
Standard form. The transportation algorithm. An initial basic solution. Test for optimality. Improving the solution. Degeneracy.

Copyrighted Material

Chapter 9 **INTEGER PROGRAMMING: SCHEDULING MODELS** 155
Production problems. Transshipment problems. Assignment problems. The traveling salesperson problem.

Chapter 10 **NONLINEAR PROGRAMMING: SINGLE-VARIABLE OPTIMIZATION** 169
The problem. Local and global optima. Results from calculus. Sequential-search techniques. Three-point interval search. Fibonacci search. Golden-mean search. Convex functions.

Chapter 11 **NONLINEAR PROGRAMMING: MULTIVARIABLE OPTIMIZATION WITHOUT CONSTRAINTS** 182
Local and global maxima. Gradient vector and Hessian matrix. Results from calculus. The method of steepest ascent. The Newton-Raphson method. The Fletcher-Powell method. Hooke-Jeeves' pattern search. A modified pattern search. Choice of an initial approximation. Concave functions.

Chapter 12 **NONLINEAR PROGRAMMING: MULTIVARIABLE OPTIMIZATION WITH CONSTRAINTS** 198
Standard forms. Lagrange multipliers. Newton-Raphson method. Penalty functions. Kuhn-Tucker conditions. Method of feasible directions.

Chapter 13 **NETWORK ANALYSIS** 216
Networks. Minimum-span problems. Shortest-route problems. Maximal-flow problems. Finding a positive-flow path.

Chapter 14 **PROJECT PLANNING USING PERT/CPM** 231
PERT/CPM. Construction of the network (arrow) diagram. Critical path computations for CPM. Critical path computations for PERT. Project time vs project cost.

Chapter 15 **INVENTORY MODELS** 259
Inventory. Fixed order quantity models. Fixed order period models. Single period models.

Chapter 16 **FORECASTING** 281
Forecasting. Regression methods. Simplex linear regression. Coefficients of correlation and determination. Standard error of estimate. Special case: logarithmic (exponential) models. Multiple regression. Smoothing methods. Moving averages. Weighted moving averages. Exponential smoothing. Exponential smoothing with trend (trend-adjusted exponential smoothing). Forecast accuracy. Forecasting time series with multiplicative model.

Copyrighted Material

Chapter 17 **GAME THEORY** 312
Games. Strategies. Stable games. Unstable games. Solution by linear programming. Dominance.

Chapter 18 **DECISION THEORY** 325
Decision processes. Naive decision criteria. *A priori* criterion. *A posteriori* criterion. Decision trees. Utility. Lotteries. Von Neumann utilities.

Chapter 19 **DYNAMIC PROGRAMMING** 342
Multistage decision processes. A mathematical program. Dynamic programming. Dynamic programming with discounting. Stochastic multistage decision processes. Policy tables.

Chapter 20 **FINITE MARKOV CHAINS** 369
Markov processes. Powers of stochastic matrices. Ergodic matrices. Regular matrices.

Chapter 21 **MARKOVIAN BIRTH-DEATH PROCESSES** 379
Population growth processes. Generalized Markovian birth-death processes. Linear Markovian birth processes. Linear Markovian death processes. Linear Markovian birth-death processes. Poisson birth processes. Poisson death processes. Poisson birth-death processes.

Chapter 22 **QUEUEING SYSTEMS** 391
Introduction. Queue characteristics. Arrival patterns. Service patterns. System capacity. Queue disciplines. Kendall's notation.

Chapter 23 **M/M/1 SYSTEMS** 398
System characteristics. The Markovian model. Steady-state solutions. Measures of effectiveness.

Chapter 24 **OTHER SYSTEMS WITH POISSON-TYPE INPUT AND EXPONENTIAL-TYPE SERVICE TIMES** 407
State-dependent processes. Little's formulas. Balking and reneging. M/M/s systems. M/M/1/K systems. M/M/s/K systems.

ANSWERS TO SUPPLEMENTARY PROBLEMS 422

INDEX 453

Chapter 1

Mathematical Programming

OPTIMIZATION PROBLEMS

In an *optimization problem* one seeks to maximize or minimize a specific quantity, called the *objective*, which depends on a finite number of input variables. These variables may be independent of one another, or they may be related through one or more *constraints*.

Example 1.1 The problem

$$\begin{aligned} \text{minimize:} \quad & z = x_1^2 + x_2^2 \\ \text{subject to:} \quad & x_1 - x_2 = 3 \\ & x_2 \geq 2 \end{aligned}$$

is an optimization problem for the objective z. The input variables are x_1 and x_2, which are constrained in two ways: x_1 must exceed x_2 by 3, and also x_2 must be greater than or equal to 2. It is desired to find values for the input variables which minimize the sum of their squares, subject to the limitations imposed by the constraints.

A *mathematical program* is an optimization problem in which the objective and constraints are given as mathematical functions and functional relationships (as they are in Example 1.1). Mathematical programs treated in this book have the form

$$\begin{aligned} \text{optimize:} \quad & z = f(x_1, x_2, \ldots, x_n) \\ \text{subject to:} \quad & \left.\begin{matrix} g_1(x_1, x_2, \ldots, x_n) \\ g_2(x_1, x_2, \ldots, x_n) \\ \cdots\cdots\cdots\cdots\cdots \\ \\ g_m(x_1, x_2, \ldots, x_n) \end{matrix}\right\} \begin{matrix} \leq \\ \\ = \\ \\ \geq \end{matrix} \left\{\begin{matrix} b_1 \\ b_2 \\ \cdots \\ \\ b_m \end{matrix}\right. \end{aligned} \tag{1.1}$$

Each of the m constraint relationships in (*1.1*) involves one of the three signs $\leq$, $=$, $\geq$. *Unconstrained* mathematical programs are covered by the formalism (*1.1*) if each function g_i is chosen as zero and each constant b_i is chosen as zero.

LINEAR PROGRAMS

A mathematical program (*1.1*) is *linear* if $f(x_1, x_2, \ldots, x_n)$ and each $g_i(x_1, x_2, \ldots, x_n)$ $(i = 1, 2, \ldots, m)$ are linear in each of their arguments—that is, if

$$f(x_1, x_2, \ldots, x_n) = c_1x_1 + c_2x_2 + \cdots + c_nx_n \tag{1.2}$$

and

$$g_i(x_1, x_2, \ldots, x_n) = a_{i1}x_1 + a_{i2}x_2 + \cdots + a_{in}x_n \tag{1.3}$$

where c_j and a_{ij} $(i = 1, 2, \ldots, m;\ j = 1, 2, \ldots, n)$ are known constants.

Any other mathematical program is *nonlinear*. Thus, Example 1.1 describes a nonlinear program, in view of the form of z.

Copyrighted Material

INTEGER PROGRAMS

An *integer program* is a linear program with the additional restriction that the input variables be integers. It is not necessary that the coefficients in (*1.2*) and (*1.3*), and the constants in (*1.1*), also be integers, but this will very often be the case.

QUADRATIC PROGRAMS

A *quadratic program* is a mathematical program in which each constraint is linear—that is, each constraint function has the form (*1.3*)—but the objective is of the form

$$f(x_1, x_2, \ldots, x_n) = \sum_{i=1}^{n} \sum_{j=1}^{n} c_{ij} x_i x_j + \sum_{i=1}^{n} d_i x_i \tag{1.4}$$

where c_{ij} and d_i are known constants.

The program given in Example 1.1 is quadratic. Both constraints are linear, and the objective has the form (*1.4*), with $n = 2$ (two variables), $c_{11} = 1$, $c_{12} = c_{21} = 0$, $c_{22} = 1$, and $d_1 = d_2 = 0$.

PROBLEM FORMULATION

Optimization problems most often are stated verbally. The solution procedure is to model the problem with a mathematical program and then solve the program by the techniques described in Chapters 2 through 15. The following approach is recommended for transforming a word problem into a mathematical program:

STEP 1: Determine the quantity to be optimized and express it as a mathematical function. Doing so serves to define the input variables.

STEP 2: Identify all stipulated requirements, restrictions, and limitations, and express them mathematically. These requirements constitute the constraints.

STEP 3: Express any hidden conditions. Such conditions are not stipulated explicitly in the problem but are apparent from the physical situation being modeled. Generally they involve nonnegativity or integer requirements on the input variables.

SOLUTION CONVENTION

In any mathematical program, we seek *a* solution. If a number of equally optimal solutions exist, then any one will do. *There is no preference between equally optimal solutions if there is no preference stipulated in the constraints.*

Solved Problems

1.1 The Village Butcher Shop traditionally makes its meat loaf from a combination of lean ground beef and ground pork. The ground beef contains 80 percent meat and 20 percent fat, and costs the shop 80¢ per pound; the ground pork contains 68 percent meat and 32 percent fat, and costs 60¢ per pound. How much of each kind of meat should the shop use in each pound of meat loaf if it wants to minimize its cost and to keep the fat content of the meat loaf to no more than 25 percent?

The objective is to minimize the cost (in cents), z, of a pound of meat loaf, where

$z \equiv$ 80 times the poundage of ground beef used plus 60 times the poundage of ground pork used

Defining

$x_1 \equiv$ poundage of ground beef used in each pound of meat loaf
$x_2 \equiv$ poundage of ground pork used in each pound of meat loaf

we express the objective as

$$\text{minimize:} \quad z = 80x_1 + 60x_2 \tag{1}$$

Each pound of meat loaf will contain $0.20x_1$ pound of fat contributed from the beef and $0.32x_2$ pound of fat contributed from the pork. The total fat content of a pound of meat loaf must be no greater than 0.25 lb. Therefore,

$$0.20x_1 + 0.32x_2 \le 0.25 \tag{2}$$

The poundages of beef and pork used in each pound of meat loaf must sum to 1; hence

$$x_1 + x_2 = 1 \tag{3}$$

Finally, the butcher shop may not use negative quantities of either meat, so that two hidden constraints are $x_1 \ge 0$ and $x_2 \ge 0$. Combining these conditions with (1), (2), and (3), we obtain

$$\begin{aligned} \text{minimize:} \quad & z = 80x_1 + 60x_2 \\ \text{subject to:} \quad & 0.20x_1 + 0.32x_2 \le 0.25 \\ & x_1 + \quad x_2 = 1 \\ \text{with:} \quad & \text{all variables nonnegative} \end{aligned} \tag{4}$$

System (4) is a linear program. As there are only two variables, a graphical solution may be given.

1.2 Solve the linear program (4) of Problem 1.1 graphically.

See Fig. 1-1. The *feasible region*—the set of points (x_1, x_2) satisfying all the constraints, including the nonnegativity conditions—is the heavy line segment in the figure. To determine z^*, the minimal value of z, we arbitrarily choose values of z and plot the graphs of the associated objectives. By choosing $z = 70$ and then $z = 75$, we obtain the objectives

$$70 = 80x_1 + 60x_2 \qquad \text{and} \qquad 75 = 80x_1 + 60x_2$$

respectively. Their graphs are the dashed lines in Fig. 1-1. It is seen that z^* will be assumed at the upper endpoint of the feasible segment, which is the intersection of the two lines

$$0.20x_1 + 0.32x_2 = 0.25 \qquad \text{and} \qquad x_1 + x_2 = 1$$

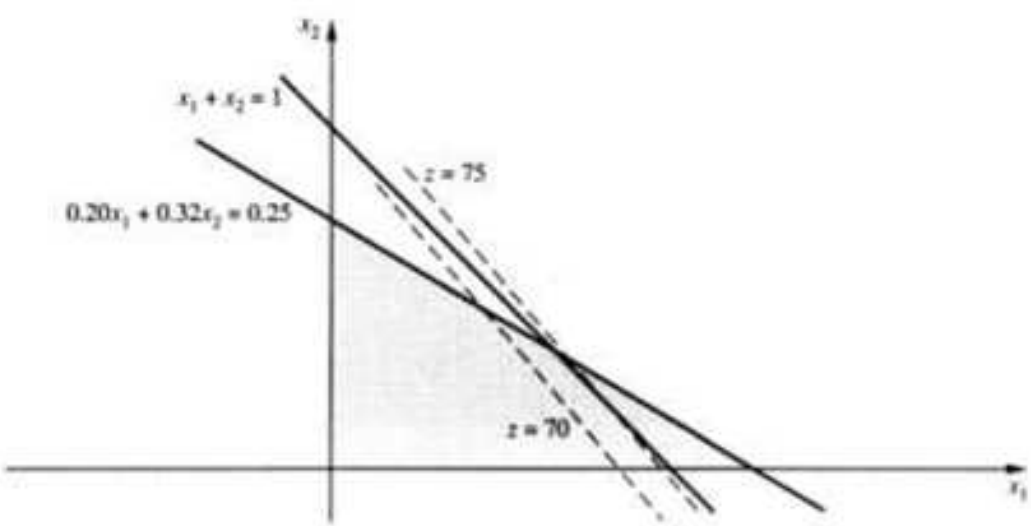

Fig. 1-1

Simultaneous solution of these equations gives $x_1^* = 7/12$, $x_2^* = 5/12$; hence,

$$z^* = 80(7/12) + 60(5/12) = 71.67¢$$

1.3 A furniture maker has 6 units of wood and 28 h of free time, in which he will make decorative screens. Two models have sold well in the past, so he will restrict himself to those two. He estimates that model I requires 2 units of wood and 7 h of time, while model II requires 1 unit of wood and 8 h of time. The prices of the models are \$120 and \$80, respectively. How many screens of each model should the furniture maker assemble if he wishes to maximize his sales revenue?

The objective is to maximize revenue (in dollars), which we denote as z:

$z \equiv$ 120 times the number of model I screens produced plus 80 times the number of model II screens produced

Letting

$x_1 \equiv$ number of model I screens to be produced

$x_2 \equiv$ number of model II screens to be produced

we express the objective as

$$\text{maximize:} \quad z = 120x_1 + 80x_2 \tag{1}$$

The furniture maker is subject to a wood constraint. As each model I requires 2 units of wood, $2x_1$ units must be allocated to them; likewise, $1x_2$ units of wood must be allocated to the model II screens. Hence the wood constraint is

$$2x_1 + x_2 \le 6 \tag{2}$$

The furniture maker also has a time constraint. The model I screens will consume $7x_1$ hours and the model II screens $8x_2$ hours; and so

$$7x_1 + 8x_2 \le 28 \tag{3}$$

It is obvious that negative quantities of either screen cannot be produced, so two hidden constraints are $x_1 \ge 0$ and $x_2 \ge 0$. Furthermore, since there is no revenue derived from partially completed screens, another hidden condition is that x_1 and x_2 be integers. Combining these hidden conditions with (1), (2), and (3), we obtain the mathematical program

$$\begin{aligned} \text{maximize:} \quad & z = 120x_1 + 80x_2 \\ \text{subject to:} \quad & 2x_1 + x_2 \le 6 \\ & 7x_1 + 8x_2 \le 28 \\ \text{with:} \quad & \text{all variables nonnegative and integral} \end{aligned} \tag{4}$$

System (4) is an integer program. As there are only two variables, a graphical solution may be given.

1.4 Give a graphical solution of the integer program (4) of Problem 1.3.

See Fig. 1-2. The feasible region is the set of integer points (marked by crosses) within the shaded area. The dashed lines are the graphs of the objective function when z is arbitrarily given the values 240, 330, and 380. It is seen that the z-line through the point (3, 0) will furnish the desired maximum; thus, the furniture maker should assemble three model I screens and no model II screens, for a maximum revenue of

$$z^* = 120(3) + 80(0) = \$360$$

Observe that this optimal answer is *not* achieved by first solving the associated linear program (the same problem without the integer constraints) and then moving to the closest feasible integer point. In fact, the feasible region for the associated linear program is the shaded area of Fig. 1-2, so the optimal solution occurs at the circled corner point. But at the closest feasible integer point, (2, 1), the objective function has the value $z = 120(2) + 80(1) = \$320$ or \$40 less than the true optimum.

An alternate solution procedure for Problem 1.3 is given in Problem 7.8.

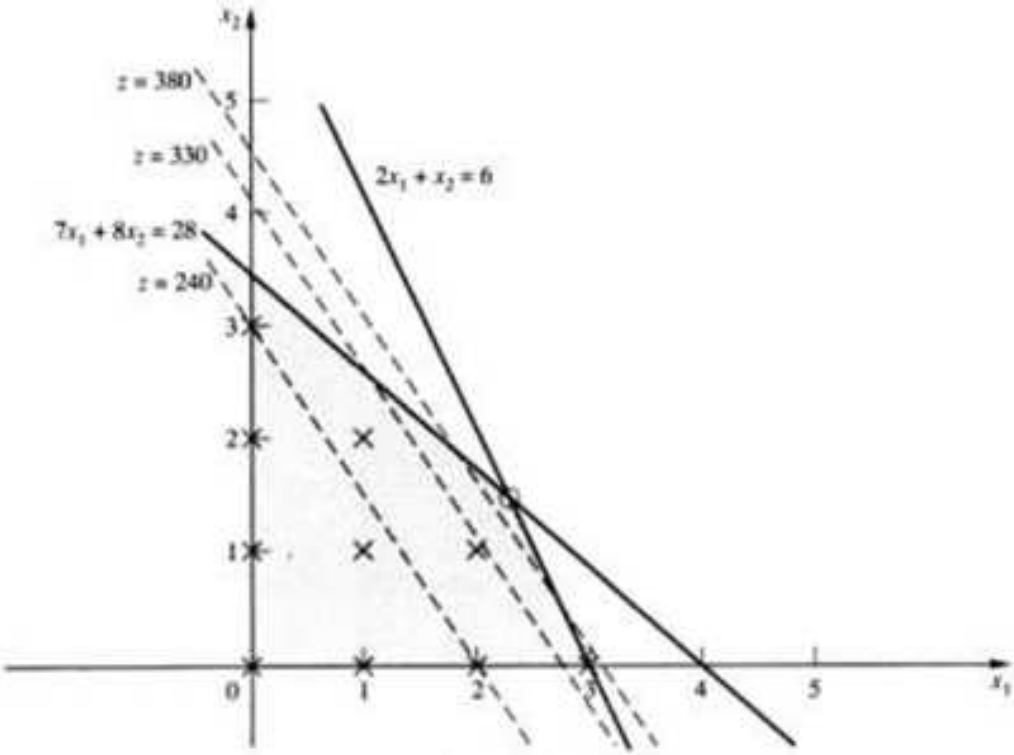

Fig. 1-2

1.5 Universal Mines Inc. operates three mines in West Virginia. The ore from each mine is separated into two grades before it is shipped; the daily production capacities of the mines, as well as their daily operating costs, are as follows:

	High-Grade Ore, tons/day	Low-Grade Ore, tons/day	Operating Cost, \$1000/day
Mine I	4	4	20
Mine II	6	4	22
Mine III	1	6	18

Universal has committed itself to deliver 54 tons of high-grade ore and 65 tons of low-grade ore by the end of the week. It also has labor contracts that guarantee employees in each mine a full day's pay for each day or fraction of a day the mine is open. Determine the number of days each mine should be operated during the upcoming week if Universal Mines is to fulfill its commitment at minimum total cost.

Let x_1, x_2, and x_3, respectively, denote the numbers of days that mines I, II, and III will be operated during the upcoming week. Then the objective (measured in units of \$1000) is

$$\text{minimize:} \quad z = 20x_1 + 22x_2 + 18x_3 \tag{1}$$

The high-grade ore requirement is

$$4x_1 + 6x_2 + x_3 \geq 54 \tag{2}$$

and the low-grade ore requirement is

$$4x_1 + 4x_2 + 6x_3 \geq 65 \tag{3}$$

As no mine may operate a negative number of days, three hidden constraints are $x_1 \geq 0$, $x_2 \geq 0$, and $x_3 \geq 0$. Moreover, as no mine may operate more than 7 days in a week, three other hidden constraints are $x_1 \leq 7$, $x_2 \leq 7$, and $x_3 \leq 7$. Finally, in view of the labor contracts, Universal Mines has nothing to gain in operating

a mine for part of a day; consequently, x_1, x_2, and x_3 are required to be integral. Combining the hidden conditions with (*1*), (*2*), and (*3*), we obtain the mathematical program

$$\begin{aligned} \text{minimize} \quad & z = 20x_1 + 22x_2 + 18x_3 \\ \text{subject to:} \quad & 4x_1 + 6x_2 + x_3 \geq 54 \\ & 4x_1 + 4x_2 + 6x_3 \geq 65 \\ & x_1 \leq 7 \\ & x_2 \leq 7 \\ & x_3 \leq 7 \\ \text{with:} \quad & \text{all variables nonnegative and integral} \end{aligned} \tag{4}$$

System (*4*) is an integer program; its solution is determined in Problem 7.4.

1.6 A manufacturer is beginning the last week of production of four different models of wooden television consoles, labeled I, II, III, and IV, each of which must be assembled and then decorated. The models require 4, 5, 3, and 5 h, respectively, for assembling and 2, 1.5, 3, and 3 h, respectively, for decorating. The profits on the models are \$7, \$7, \$6, and \$9, respectively. The manufacturer has 30 000 h available for assembling these products (750 assemblers working 40 h/wk) and 20 000 h available for decorating (500 decorators working 40 h/wk). How many of each model should the manufacturer produce during this last week to maximize profit? Assume that all units made can be sold.

The objective is to maximize profit (in dollars), which we denote as z. Setting

$x_1 \equiv$ number of model I consoles to be produced in the week
$x_2 \equiv$ number of model II consoles to be produced in the week
$x_3 \equiv$ number of model III consoles to be produced in the week
$x_4 \equiv$ number of model IV consoles to be produced in the week

we can formulate the objective as

$$\text{maximize:} \quad z = 7x_1 + 7x_2 + 6x_3 + 9x_4 \tag{1}$$

There are constraints on the total time available for assembling and the total time available for decorating. These are, respectively, modeled by

$$4x_1 + 5x_2 + 3x_3 + 5x_4 \leq 30\,000 \tag{2}$$

$$2x_1 + 1.5x_2 + 3x_3 + 3x_4 \leq 20\,000 \tag{3}$$

As negative quantities may not be produced, four hidden constraints are $x_i \geq 0$ ($i = 1, 2, 3, 4$). Additionally, since this is the last week of production, partially completed models at the week's end would remain unfinished and so would generate no profit. To avoid such possibilities, we require an integral value for each variable. Combining the hidden conditions with (*1*), (*2*), and (*3*), we obtain the mathematical program

$$\begin{aligned} \text{maximize:} \quad & z = 7x_1 + 7x_2 + 6x_3 + 9x_4 \\ \text{subject to:} \quad & 4x_1 + 5x_2 + 3x_3 + 5x_4 \leq 30\,000 \\ & 2x_1 + 1.5x_2 + 3x_3 + 3x_4 \leq 20\,000 \\ \text{with:} \quad & \text{all variables nonnegative and integral} \end{aligned} \tag{4}$$

System (*4*) is an integer program; its solution is determined in Problem 6.4.

1.7 The Aztec Refining Company produces two types of unleaded gasoline, regular and premium, which it sells to its chain of service stations for \$12 and \$14 per barrel, respectively. Both types are blended from Aztec's inventory of refined domestic oil and refined foreign oil, and must meet the following specifications:

	Maximum Vapor Pressure	Minimum Octane Rating	Maximum Demand, bbl/wk	Minimum Deliveries, bbl/wk
Regular	23	88	100 000	50 000
Premium	23	93	20 000	5 000

The characteristics of the refined oils in inventory are as follows:

	Vapor Pressure	Octane Rating	Inventory, bbl	Cost, \$/bbl
Domestic	25	87	40 000	8
Foreign	15	98	60 000	15

What quantities of the two oils should Aztec blend into the two gasolines in order to maximize weekly profit?

Set

$x_1 \equiv$ barrels of domestic blended into regular
$x_2 \equiv$ barrels of foreign blended into regular
$x_3 \equiv$ barrels of domestic blended into premium
$x_4 \equiv$ barrels of foreign blended into premium

An amount $x_1 + x_2$ of regular will be produced and generate a revenue of $12(x_1 + x_2)$; an amount $x_3 + x_4$ of premium will be produced and generate a revenue of $14(x_3 + x_4)$. An amount $x_1 + x_3$ of domestic will be used, at a cost of $8(x_1 + x_3)$; an amount $x_2 + x_4$ of foreign will be used, at a cost of $15(x_2 + x_4)$. The total profit, z, is revenue minus cost:

$$\begin{aligned} \text{maximize:} \quad z &= 12(x_1 + x_2) + 14(x_3 + x_4) - 8(x_1 + x_3) - 15(x_2 + x_4) \\ &= 4x_1 - 3x_2 + 6x_3 - x_4 \end{aligned} \tag{1}$$

There are limitations imposed on the production by demand, availability of supplies, and specifications on the blends. From the demands,

$$x_1 + x_2 \le 100\,000 \quad \text{(maximum demand for regular)} \tag{2}$$

$$x_3 + x_4 \le 20\,000 \quad \text{(maximum demand for premium)} \tag{3}$$

$$x_1 + x_2 \ge 50\,000 \quad \text{(minimum regular required)} \tag{4}$$

$$x_3 + x_4 \ge 5\,000 \quad \text{(minimum premium required)} \tag{5}$$

From the availability,

$$x_1 + x_3 \le 40\,000 \quad \text{(domestic)} \tag{6}$$

$$x_2 + x_4 \le 60\,000 \quad \text{(foreign)} \tag{7}$$

The constituents of a blend contribute to the overall octane rating according to their percentages by weight; likewise for the vapor pressure. Thus, the octane rating of regular is

$$87\frac{x_1}{x_1 + x_2} + 98\frac{x_2}{x_1 + x_2}$$

and the requirement that this be at least 88 leads to

$$x_1 - 10x_2 \le 0 \tag{8}$$

Similarly, we obtain:

$$6x_3 - 5x_4 \le 0 \quad \text{(premium octane constraint)} \tag{9}$$

$$2x_1 - 8x_2 \le 0 \quad \text{(regular vapor-pressure constraint)} \tag{10}$$

$$2x_3 - 8x_4 \le 0 \quad \text{(premium vapor-pressure constraint)} \tag{11}$$

Combining (1) through (11) with the four (hidden) nonnegativity constraints on the four variables, we obtain the mathematical program

$$\begin{aligned}
\text{maximize:}\quad & z = 4x_1 - 3x_2 + 6x_3 - x_4 \\
\text{subject to:}\quad & x_1 + x_2 \le 100\,000 \\
& x_3 + x_4 \le 20\,000 \\
& x_1 + x_3 \le 40\,000 \\
& x_2 + x_4 \le 60\,000 \\
& x_1 - 10x_2 \le 0 \\
& 6x_3 - 5x_4 \le 0 \\
& 2x_1 - 8x_2 \le 0 \\
& 2x_3 - 8x_4 \le 0 \\
& x_1 + x_2 \ge 50\,000 \\
& x_3 + x_4 \ge 5\,000 \\
\text{with:}\quad & \text{all variables nonnegative}
\end{aligned} \tag{12}$$

System (12) is a linear program; its solution is determined in Problem 3.7.

1.8 A hiker plans to go on a camping trip. There are five items the hiker wishes to take with her, but together they exceed the 60-lb weight limit she feels she can carry. To assist herself in the selection process, she has assigned a value to each item in ascending order of importance:

Item	1	2	3	4	5
Weight, lb	52	23	35	15	7
Value	100	60	70	15	15

Which items should she take to maximize the total value without exceeding the weight restriction?

Letting x_i $(i = 1, 2, 3, 4, 5)$ designate the amount of item i to be taken, we can formulate the objective as

$$\text{maximize:}\quad z = 100x_1 + 60x_2 + 70x_3 + 15x_4 + 15x_5 \tag{1}$$

The weight limitation is

$$52x_1 + 23x_2 + 35x_3 + 15x_4 + 7x_5 \le 60 \tag{2}$$

Since an item either will or will not be taken, each variable must be either 1 or 0. Such conditions are enforced if we require each variable to be nonnegative, no greater than 1, and integral. Combining these constraints with (1) and (2), we obtain the mathematical program

$$\begin{aligned}
\text{maximize:}\quad & z = 100x_1 + 60x_2 + 70x_3 + 15x_4 + 15x_5 \\
\text{subject to:}\quad & 52x_1 + 23x_2 + 35x_3 + 15x_4 + 7x_5 \le 60 \\
& x_1 \le 1 \\
& x_2 \le 1 \\
& x_3 \le 1 \\
& x_4 \le 1 \\
& x_5 \le 1 \\
\text{with:}\quad & \text{all variables nonnegative and integral}
\end{aligned} \tag{3}$$

System (3) is an integer program; its solution is determined in Problem 6.7 and again in Problem 19.21.

1.9 A 24-hour supermarket has the following minimal requirements for cashiers:

Period	1	2	3	4	5	6
Time of day (24-h clock)	3–7	7–11	11–15	15–19	19–23	23–3
Minimum No.	7	20	14	20	10	5

Period 1 follows immediately after period 6. A cashier works eight consecutive hours, starting at the beginning of one of the six periods. Determine a daily employee worksheet which satisfies the requirements with the least number of personnel.

Setting x_i ($i = 1, 2, \ldots, 6$) equal to the number of cashiers *beginning* work at the start of period i, we can model this problem by the mathematical program

$$\begin{aligned}
\text{minimize:}\quad & z = x_1 + x_2 + x_3 + x_4 + x_5 + x_6 \\
\text{subject to:}\quad & x_1 \qquad\qquad\qquad\qquad + x_6 \geq 7 \\
& x_1 + x_2 \qquad\qquad\qquad\qquad \geq 20 \\
& \qquad x_2 + x_3 \qquad\qquad\qquad \geq 14 \\
& \qquad\qquad x_3 + x_4 \qquad\qquad \geq 20 \\
& \qquad\qquad\qquad x_4 + x_5 \qquad \geq 10 \\
& \qquad\qquad\qquad\qquad x_5 + x_6 \geq 5 \\
\text{with:}\quad & \text{all variables nonnegative and integral}
\end{aligned} \tag{1}$$

System (1) is an integer program; its solution is determined in Problem 6.3.

1.10 A cheese shop has 20 lb of a seasonal fruit mix and 60 lb of an expensive cheese with which it will make two cheese spreads, delux and regular, that are popular during Christmas week. Each pound of the delux spread consists of 0.2 lb of the fruit mix and 0.8 lb of the expensive cheese, while each pound of the regular spread consists of 0.2 lb of the fruit mix, 0.3 lb of the expensive cheese, and 0.5 lb of a filler cheese which is cheap and in plentiful supply. From past pricing policies, the shop has found that the demand for each spread depends on its price as follows:

$$D_1 = 190 - 25P_1 \qquad \text{and} \qquad D_2 = 250 - 50P_2$$

where D denotes demand (in pounds), P denotes price (in dollars per pound), and the subscripts 1 and 2 refer to the delux and regular spreads, respectively. How many pounds of each spread should the cheese shop prepare, and what prices should it establish, if it wishes to maximize income and be left with no inventory of either spread at the end of Christmas week?

Let x_1 pounds of delux spread and x_2 pounds of regular spread be made. If all product can be sold, the objective is to

$$\text{maximize:}\quad z = P_1x_1 + P_2x_2 \tag{1}$$

Now, all product will indeed be sold (and none will be left over in inventory) if production does not exceed demand, i.e., if $x_1 \leq D_1$ and $x_2 \leq D_2$. This gives the constraints

$$x_1 + 25P_1 \leq 190 \qquad \text{and} \qquad x_2 + 50P_2 \leq 250 \tag{2}$$

From the availability of fruit mix,

$$0.2x_1 + 0.2x_2 \le 20 \tag{3}$$

and from the availability of expensive cheese,

$$0.8x_1 + 0.3x_2 \le 60 \tag{4}$$

There is no constraint on the filler cheese, since the shop has as much as it needs. Finally, neither production nor price can be negative; so four hidden constraints are $x_1 \ge 0$, $x_2 \ge 0$, $P_1 \ge 0$, and $P_2 \ge 0$. Combining these conditions with (1) through (4), we obtain the mathematical program

$$\begin{aligned} \text{maximize:}\quad & z = P_1x_1 + P_2x_2 \\ \text{subject to:}\quad & 0.2x_1 + 0.2x_2 \le 20 \\ & 0.8x_1 + 0.3x_2 \le 60 \\ & x_1 + 25P_1 \le 190 \\ & x_2 + 50P_2 \le 250 \\ \text{with:}\quad & \text{all variables nonnegative} \end{aligned} \tag{5}$$

System (5) is a quadratic program in the variables x_1, x_2, P_1, and P_2. It can be simplified if we note that for any fixed positive x_1 and x_2 the objective function increases as either P_1 or P_2 increases. Thus, for a maximum, P_1 and P_2 must be such that the constraints (2) become equations, whereby P_1 and P_2 may be eliminated from the objective function. We then have a quadratic program in x_1 and x_2.

$$\begin{aligned} \text{maximize:}\quad & z = (7.6 - 0.04x_1)x_1 + (5 - 0.02x_2)x_2 \\ \text{subject to:}\quad & 0.2x_1 + 0.2x_2 \le 20 \\ & 0.8x_1 + 0.3x_2 \le 60 \\ \text{with:}\quad & x_1 \text{ and } x_2 \text{ nonnegative} \end{aligned} \tag{6}$$

which is easily solved graphically.

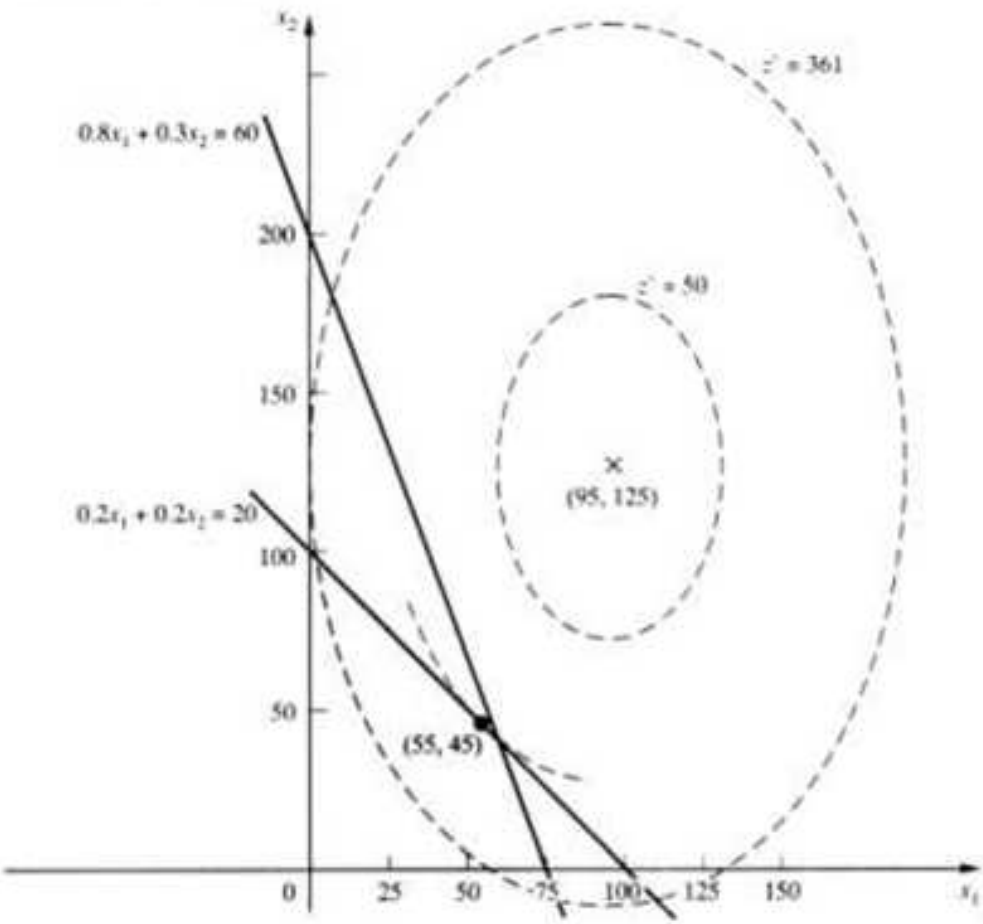

Fig. 1-3

1.11 Give a graphical solution of the quadratic program (6) of Problem 1.10.

For graphing purposes, it is convenient to complete the square in the objective function, yielding

$$\text{maximize:} \quad z = 673.5 - 0.04(x_1 - 95)^2 - 0.02(x_2 - 125)^2$$

which is equivalent to

$$\text{minimize:} \quad z' = 0.04(x_1 - 95)^2 + 0.02(x_2 - 125)^2 \tag{1}$$

Since the constraints are linear, the feasible region is bounded by straight lines; it appears shaded in Fig. 1-3. For any particular value of z', (1) defines an ellipse centered at (95, 125), and two such ellipses are shown in Fig. 1-3 as dashed curves. The minimum value of z' will correspond to that ellipse defined by (1) which is tangent to the line

$$0.2x_1 + 0.2x_2 = 20 \tag{2}$$

To find the point of tangency, we equate the slopes of the line and the ellipse,

$$\frac{dx_2}{dx_1} = -1 \qquad \text{and} \qquad \frac{dx_2}{dx_1} = -\frac{2(x_1 - 95)}{x_2 - 125}$$

obtained by implicit differentiation (2) and (1), respectively; this gives

$$x_2 = 2x_1 - 65 \tag{3}$$

Solving (2) and (3) simultaneously gives the optimal solution to Problem 1.10:

$$x_1^* = 55 \text{ lb of delux spread} \qquad x_2^* = 45 \text{ lb of regular spread}$$

1.12 A plastics manufacturer has 1200 boxes of transparent wrap in stock at one factory and another 1000 boxes at its second factory. The manufacturer has orders for this product from three different retailers, in quantities of 1000, 700, and 500 boxes, respectively. The unit shipping costs (in cents per box) from the factories to the retailers are as follows:

	Retailer 1	Retailer 2	Retailer 3
Factory 1	14	13	11
Factory 2	13	13	12

Determine a minimum-cost shipping schedule for satisfying all demands from current inventory.

Writing x_{ij} ($i = 1, 2$; $j = 1, 2, 3$) for the number of boxes to be shipped from factory i to retailer j, we have as the objective (in cents):

$$\text{minimize:} \quad z = 14x_{11} + 13x_{12} + 11x_{13} + 13x_{21} + 13x_{22} + 12x_{23}$$

Since the amounts shipped from the factories cannot exceed supplies,

$$x_{11} + x_{12} + x_{13} \le 1200 \quad \text{(shipments from factory 1)}$$

$$x_{21} + x_{22} + x_{23} \le 1000 \quad \text{(shipments from factory 2)}$$

Additionally, the total amounts sent to the retailers must meet their demands; hence

$$x_{11} + x_{21} \ge 1000 \quad \text{(shipments to retailer 1)}$$

$$x_{12} + x_{22} \ge 700 \quad \text{(shipments to retailer 2)}$$

$$x_{13} + x_{23} \ge 500 \quad \text{(shipments to retailer 3)}$$

Since the total supply, 1200 + 1000, equals the total demand, 1000 + 700 + 500, each inequality constraint can be tightened to an equality. Doing so, and including the hidden conditions that no shipment be negative

and no box be split for shipment, we obtain the mathematical program

$$
\begin{aligned}
\text{minimize:}\quad & z = 14x_{11} + 13x_{12} + 11x_{13} + 13x_{21} + 13x_{22} + 12x_{23} \\
\text{subject to:}\quad & x_{11} + x_{12} + x_{13} = 1200 \\
& x_{21} + x_{22} + x_{23} = 1000 \\
& x_{11} + x_{21} = 1000 \\
& x_{12} + x_{22} = 700 \\
& x_{13} + x_{23} = 500 \\
\text{with:}\quad & \text{all variables nonnegative and integral}
\end{aligned}
\tag{1}
$$

System (1) is an integer program; its solution is determined in Problem 7.3 and again in Problem 8.6.

1.13 A 400-meter medley relay involves four different swimmers, who successively swim 100 meters of the backstroke, breaststroke, butterfly, and freestyle. A coach has six very fast swimmers whose expected times (in seconds) in the individual events are given in Table 1-1.

Table 1-1

	Event 1 (backstroke)	Event 2 (breaststroke)	Event 3 (butterfly)	Event 4 (freestyle)
Swimmer 1	65	73	63	57
Swimmer 2	67	70	65	58
Swimmer 3	68	72	69	55
Swimmer 4	67	75	70	59
Swimmer 5	71	69	75	57
Swimmer 6	69	71	66	59

How should the coach assign swimmers to the relay so as to minimize the sum of their times?

The objective is to minimize total time, which we denote as z. Using double-subscripted variables x_{ij} ($i = 1, 2, \ldots, 6$; $j = 1, 2, 3, 4$) to designate the number of times swimmer i will be assigned to event j, we can formulate the objective as

$$\text{minimize:}\quad z = 65x_{11} + 73x_{12} + 63x_{13} + 57x_{14} + 67x_{21} + \cdots + 66x_{63} + 59x_{64}$$

Since no swimmer can be assigned to more than one event,

$$
\begin{aligned}
& x_{11} + x_{12} + x_{13} + x_{14} \le 1 \\
& x_{21} + x_{22} + x_{23} + x_{24} \le 1 \\
& \cdots\cdots\cdots\cdots\cdots\cdots \\
& x_{61} + x_{62} + x_{63} + x_{64} \le 1
\end{aligned}
$$

Since each event must have one swimmer assigned to it, we also have

$$
\begin{aligned}
& x_{11} + x_{21} + x_{31} + x_{41} + x_{51} + x_{61} = 1 \\
& \cdots\cdots\cdots\cdots\cdots\cdots \\
& x_{14} + x_{24} + x_{34} + x_{44} + x_{54} + x_{64} = 1
\end{aligned}
$$

These 10 constraints, combined with the objective and the hidden conditions that each variable be nonnegative and integral, comprise an integer program. Its solution is determined in Problem 9.4.

1.14 A major oil company wants to build a refinery that will be supplied from three port cities. Port B is located 300 km east and 400 km north of Port A, while Port C is 400 km east and 100 km

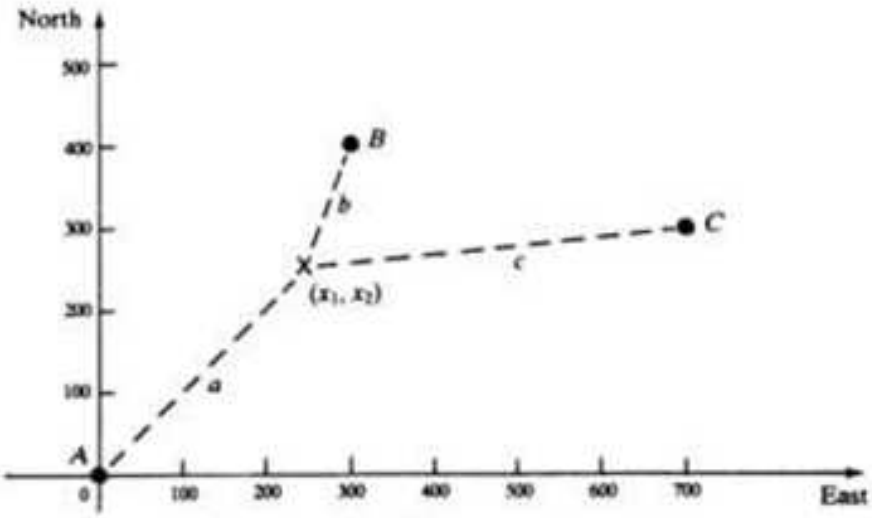

Fig. 1-4

south of Port B. Determine the location of the refinery so that the total amount of pipe required to connect the refinery to the ports is minimized.

The objective is tantamount to minimizing the sum of the distances between the refinery and the three ports. As an aid to calculating this sum, we establish a coordinate system, Fig. 1-4, with Port A as the origin. In this system, Port B has coordinates (300, 400) and Port C has coordinates (700, 300). With (x_1, x_2) designating the unknown coordinates of the refinery, the objective is

$$\text{minimize:} \quad z = \sqrt{x_1^2 + x_2^2} + \sqrt{(x_1 - 300)^2 + (x_2 - 400)^2} + \sqrt{(x_1 - 700)^2 + (x_2 - 300)^2} \qquad (1)$$

There are no constraints on the coordinates of the refinery nor any hidden conditions; for example, a negative value of x_1 signifies only that the refinery should be placed west of Port A. Equation (1) is a nonlinear, unconstrained, mathematical program; its solution is determined in Problem 11.11. See also Problem 1.26.

1.15 An individual has \$4000 to invest and three opportunities available to him. Each opportunity requires deposits in \$1000 amounts; the investor may allocate all the money to just one opportunity or split the money between them. The expected returns are tabulated as follows:

	Dollars Invested				
	0	1000	2000	3000	4000
Return from Opportunity 1	0	2000	5000	6000	7000
Return from Opportunity 2	0	1000	3000	6000	7000
Return from Opportunity 3	0	1000	4000	5000	8000

How much money should be invested in each opportunity to obtain the greatest total return?

The objective is to maximize total return, denoted by z, which is the sum of the returns from each opportunity. All investments are restricted to be integral multiples of the unit \$1000. Letting $f_i(x)$ $(i = 1, 2, 3)$ denote the return (in thousand-dollar units) from opportunity i when x units of money are invested in it, we can rewrite the returns table as Table 1-2.

Defining x_i $(i = 1, 2, 3)$ as the number of units of money invested in opportunity i, we can formulate the objective as

$$\text{maximize:} \quad z = f_1(x_1) + f_2(x_2) + f_3(x_3) \qquad (1)$$

Table 1-2

f \ x	0	1	2	3	4
$f_1(x)$	0	2	5	6	7
$f_2(x)$	0	1	3	6	7
$f_3(x)$	0	1	4	5	8

Since the individual has only 4 units of money to invest,

$$x_1 + x_2 + x_3 \le 4 \tag{2}$$

Augmenting (*1*) and (*2*) with the hidden conditions that x_1, x_2, and x_3 be nonnegative and integral, we obtain the mathematical program

$$\begin{aligned} \text{maximize:} \quad & z = f_1(x_1) + f_2(x_2) + f_3(x_3) \\ \text{subject to:} \quad & x_1 + x_2 + x_3 \le 4 \\ \text{with:} \quad & \text{all variables nonnegative and integral} \end{aligned} \tag{3}$$

Plotting $f_i(x)$ against x for each function gives a graph that is not a straight line. Therefore, system (*3*) is a nonlinear program; its solution is determined in Problem 19.1.

Supplementary Problems

Formulate but do not solve mathematical programs that model Problems 1.16 through 1.25.

1.16 Fay Klein had developed two types of handcrafted, adult games that she sells to department stores throughout the country. Although the demand for these games exceeds her capacity to produce them, Ms. Klein continues to work alone and to limit her workweek to 50 h. Game I takes 3.5 h to produce and brings a profit of \$28, while game II requires 4 h to complete and brings a profit of \$31. How many games of each type should Ms. Klein produce weekly if her objective is to maximize total profit?

1.17 A pet store has determined that each hamster should receive at least 70 units of protein, 100 units of carbohydrates, and 20 units of fat daily. If the store carries the six types of feed shown in Table 1-3, what blend of feeds satisfies the requirements at minimum cost to the store?

Table 1-3

Feed	Protein, units/oz	Carbohydrates, units/oz	Fat, units/oz	Cost, ¢/oz
A	20	50	4	2
B	30	30	9	3
C	40	20	11	5
D	40	25	10	6
E	45	50	9	8
F	30	20	10	8

1.18 A local manufacturing firm produces four different metal products, each of which must be machined, polished, and assembled. The specific time requirements (in hours) for each product are as follows.

	Machining, h	Polishing, h	Assembling, h
Product I	3	1	2
Product II	2	1	1
Product III	2	2	2
Product IV	4	3	1

The firm has available to it on a weekly basis 480 h of machine time, 400 h of polishing time, and 400 h of assembly time. The unit profits on the products are \$6, \$4, \$6, and \$8, respectively. The firm has a contract with a distributor to provide 50 units of product I and 100 units of any combination of products II and III each week. Through other customers, the firm can sell each week as many units of products I, II, and III as it can produce, but only a maximum of 25 units of product IV. How many units of each product should the firm manufacture each week to meet all contractual obligations and maximize its total profit? Assume that any unfinished pieces can be completed the following week.

1.19 A caterer must prepare from five fruit drinks in stock 500 gal of a punch containing at least 20 percent orange juice, 10 percent grapefruit juice, and 5 percent cranberry juice. If inventory data are as shown below, how much of each fruit drink should the caterer use to obtain the required composition at minimum total cost?

	Orange Juice, %	Grapefruit Juice, %	Cranberry Juice, %	Supply, gal	Cost, \$/gal
Drink A	40	40	0	200	1.50
Drink B	5	10	20	400	0.75
Drink C	100	0	0	100	2.00
Drink D	0	100	0	50	1.75
Drink E	0	0	0	800	0.25

1.20 A town has budgeted \$250 000 for the development of new rubbish disposal areas. Seven sites are available, whose projected capacities and development costs are given below. Which sites should the town develop?

Site	A	B	C	D	E	F	G
Capacity, tons/wk	20	17	15	15	10	8	5
Cost, \$1000	145	92	70	70	84	14	47

1.21 A semiconductor corporation produces a particular solid-state module that it supplies to four different television manufacturers. The module can be produced at each of the corporation's three plants, although the costs vary because of differing production efficiencies at the plants. Specifically, it costs \$1.10 to produce a module at plant A, \$0.95 at plant B, and \$1.03 at plant C. Monthly production capacities of the plants are 7500, 10 000, and 8100 modules, respectively. Sales forecasts project monthly demand at 4200, 8300, 6300, and 2700 modules for television manufacturers I, II, III, and IV, respectively. If the cost (in dollars)

for shipping a module from a factory to a manufacturer is as shown below, find a production schedule that will meet all needs at minimum total cost.

	I	II	III	IV
A	0.11	0.13	0.09	0.19
B	0.12	0.16	0.10	0.14
C	0.14	0.13	0.12	0.15

1.22 The manager of a supermarket meat department finds she has 200 lb of round steak, 800 lb of chuck steak, and 150 lb of pork in stock on Saturday morning, which she will use to make hamburger meat, picnic patties, and meat loaf. The demand for each of these items always exceeds the supermarket's supply. Hamburger meat must be at least 20 percent ground round and 50 percent ground chuck (by weight); picnic patties must be at least 20 percent ground pork and 50 percent ground chuck; and meat loaf must be at least 10 percent ground round, 30 percent ground pork, and 40 percent ground chuck. The remainder of each product is an inexpensive nonmeat filler which the store has in unlimited supply. How many pounds of each product should be made if the manager desires to minimize the amount of meat that must be stored in the supermarket over Sunday?

1.23 A legal firm has accepted five new cases, each of which can be handled adequately by any one of its five junior partners. Due to differences in experience and expertise, however, the junior partners would spend varying amounts of time on the cases. A senior partner has estimated the time requirements (in hours) as shown below:

	Case 1	Case 2	Case 3	Case 4	Case 5
Lawyer 1	145	122	130	95	115
Lawyer 2	80	63	85	48	78
Lawyer 3	121	107	93	69	95
Lawyer 4	118	83	116	80	105
Lawyer 5	97	75	120	80	111

Determine an optimal assignment of cases to lawyers such that each junior partner receives a different case and the total hours expended by the firm is minimized.

1.24 Recreational Motors manufactures golf carts and snowmobiles at its three plants. Plant A produces 40 golf carts and 35 snowmobiles daily; plant B produces 65 golf carts daily, but no snowmobiles; plant C produces 53 snowmobiles daily, but no golf carts. The costs of operating plants A, B, and C are respectively \$210 000, \$190 000, and \$182 000 per day. How many days (including Sundays and holidays) should each plant operate during September to fulfill a production schedule of 1500 golf carts and 1100 snowmobiles at minimum cost? Assume that labor contracts require that once a plant is opened, workers must be paid for the entire day.

1.25 The Futura Company produces two types of farm fertilizers, Futura Regular and Futura's Best. Futura Regular is composed of 25% active ingredients and 75% inert ingredients, while Futura's Best contains 40% active ingredients and 60% inert ingredients. Warehouse facilities limit inventories to 500 tons of active ingredients and 1200 tons of inert ingredients, and they are completely replenished once a week.

Futura Regular is similar to other fertilizers on the market and is competitively priced at \$250 per ton. At this price, the company has had no difficulty in selling all the Futura Regular it produces. Futura's Best, however, has no competition, and so there are no constraints on its price. Of course, demand does depend on price, and through past experience the company has determined that price P (in dollars) and

demand D (in tons) are related by $P = 600 - D$. How many tons of each type of fertilizer should Futura produce weekly in order to maximize revenue?

1.26 *Explain why the following constitutes an analog solution to Problem 1.14.* Imagine that Fig. 1-4 represents the top of a tall table. Small holes are bored through the tabletop at points A, B, and C. The three ends of three lengths of string are joined in a knot, which lies on the tabletop; the three free ends are run through the holes, and, underneath the tabletop, three equal weights are hung from them. Then, assuming negligible friction, the equilibrium position of the knot gives the optimal location of the refinery.

Chapter 2

Linear Programming: Basic Concepts

A method for solving linear programs involving many variables is described in Chapter 3. To initialize the method, one must transform all inequality constraints into equalities and must know one feasible, nonnegative solution.

NONNEGATIVITY CONDITIONS

Any variable not already constrained to be nonnegative is replaced by the difference of two new variables which are so constrained. (See Problem 2.6.)

Linear constraints (Chapter 1) are of the form:

$$\sum_{j=1}^{n} a_{ij}x_j \sim b_i \tag{2.1}$$

where $\sim$ stands for one of the relations $\leq$, $\geq$, $=$ (not necessarily the same one for each i). The constants b_i may always be assumed nonnegative.

Example 2.1 The constraint $2x_1 - 3x_2 + 4x_3 \leq -5$ is multiplied by -1 to obtain $-2x_1 + 3x_2 - 4x_3 \geq 5$, which has a nonnegative right-hand side.

SLACK VARIABLES AND SURPLUS VARIABLES

A linear constraint of the form $\sum a_{ij}x_j \leq b_i$ can be converted into an equality by adding a new, nonnegative variable to the left-hand side of the inequality. Such a variable is numerically equal to the difference between the right- and left-hand sides of the inequality and is known as a *slack variable*. It represents the waste involved in that phase of the system modeled by the constraint.

Example 2.2 The first constraint in Problem 1.6 is

$$4x_1 + 5x_2 + 3x_3 + 5x_4 \leq 30\,000$$

The left-hand side of this inequality models the total number of hours used to assemble all television consoles, while the right-hand side is the total number of hours available. This inequality is transformed into the equation

$$4x_1 + 5x_2 + 3x_3 + 5x_4 + x_5 = 30\,000$$

by adding the slack variable x_5 to the left-hand side of the inequality. Here x_5 represents the number of assembly hours available to the manufacturer but not used.

A linear constraint of the form $\sum a_{ij}x_j \geq b_i$ can be converted into an equality by subtracting a new, nonnegative variable from the left-hand side of the inequality. Such a variable is numerically equal to the difference between the left- and right-hand sides of the inequality and is known as a *surplus variable*. It represents excess input into that phase of the system modeled by the constraint.

Example 2.3 The first constraint in Problem 1.5 is

$$4x_1 + 6x_2 + x_3 \geq 54$$

The left-hand side of this inequality represents the combined output of high-grade ore from three mines, while the right-hand side is the minimum tonnage of such ore required to meet contractual obligations. This inequality is

Copyrighted Material

transformed into the equation

$$4x_1 + 6x_2 + x_3 - x_4 = 54$$

by subtracting the surplus variable x_4 from the left-hand side of the inequality. Here x_4 represents the amount of high-grade ore mined over and above that needed to fulfill the contract.

GENERATING AN INITIAL FEASIBLE SOLUTION

After all linear constraints (with nonnegative right-hand sides) have been transformed into equalities by introducing slack and surplus variables where necessary, add a new variable, called an *artificial variable*, to the left-hand side of each constraint equation that does not contain a slack variable. Each constraint equation will then contain either one slack variable or one artificial variable. A nonnegative initial solution to this new set of constraints is obtained by setting each slack variable and each artificial variable equal to the right-hand side of the equation in which it appears and setting all other variables, including the surplus variables, equal to zero.

Example 2.4 The set of constraints

$$\begin{aligned} x_1 + 2x_2 &\le 3 \\ 4x_1 + 5x_2 &\ge 6 \\ 7x_1 + 8x_2 &= 15 \end{aligned}$$

is transformed into a system of equations by adding a slack variable, x_3, to the left-hand side of the first constraint and subtracting a surplus variable, x_4, from the left-hand side of the second constraint. The new system is

$$\begin{aligned} x_1 + 2x_2 + x_3 \qquad &= 3 \\ 4x_1 + 5x_2 \qquad - x_4 &= 6 \\ 7x_1 + 8x_2 \qquad\quad &= 15 \end{aligned} \tag{2.2}$$

If now artificial variables x_5 and x_6 are respectively added to the left-hand sides of the last two constraints in system (2.2), the constraints without a slack variable, the result is

$$\begin{aligned} x_1 + 2x_2 + x_3 \qquad\qquad\qquad &= 3 \\ 4x_1 + 5x_2 \qquad - x_4 + x_5 \qquad &= 6 \\ 7x_1 + 8x_2 \qquad\qquad\qquad + x_6 &= 15 \end{aligned}$$

A *nonnegative* solution to this last system is $x_3 = 3$, $x_5 = 6$, $x_6 = 15$, and $x_1 = x_2 = x_4 = 0$. (Notice, however, that $x_1 = 0$, $x_2 = 0$ is *not* a solution to the original set of constraints.)

Occasionally, an initial solution can be generated easily without a full complement of slack and artificial variables. An example is Problem 2.5.

PENALTY COSTS

The introduction of slack and surplus variables alters neither the nature of the constraints nor the objective. Accordingly, such variables are incorporated into the objective function with zero coefficients. Artificial variables, however, do change the nature of the constraints. Since they are added to only one side of an equality, the new system is equivalent to the old system of constraints if and only if the artificial variables are zero. To guarantee such assignments in the optimal solution (in contrast to the initial solution), artificial variables are incorporated into the objective function with very large positive coefficients in a minimization program or very large negative coefficients in a maximization program. These coefficients, denoted by either M or $-M$, where M is understood to be a large positive number, represent the (severe) penalty incurred in making a unit assignment to the artificial variables.

In hand calculations, penalty costs can be left as $\pm M$. In computer calculations, M must be assigned a numerical value, usually a number three or four times larger in magnitude than any other number in the program.

STANDARD FORM

A linear program is in *standard form* if the constraints are all modeled as equalities and if one feasible solution is known. In matrix notation, standard form is

$$\begin{aligned} \text{optimize:} \quad & z = \mathbf{C}^T\mathbf{X} \\ \text{subject to:} \quad & \mathbf{AX} = \mathbf{B} \\ \text{with:} \quad & \mathbf{X} \geq \mathbf{0} \end{aligned} \tag{2.3}$$

where $\mathbf{X}$ is the column vector of unknowns, including all slack, surplus, and artificial variables; $\mathbf{C}^T$ is the row vector of the corresponding costs; $\mathbf{A}$ is the coefficient matrix of the constraint equations; and $\mathbf{B}$ is the column vector of the right-hand sides of the constraint equations. [*Note:* In the remainder of this book, vectors will normally be represented as one-columned matrices, and we shall simply say "vector" instead of "column vector." Superscript T designates transposition.] If $\mathbf{X}_0$ denotes the vector of slack and artificial variables only, then the initial feasible solution is given by $\mathbf{X}_0 = \mathbf{B}$, where it is understood that all variables in $\mathbf{X}$ not included in $\mathbf{X}_0$ are assigned zero values.

LINEAR DEPENDENCE AND INDEPENDENCE

A set of m-dimensional vectors, $\{\mathbf{P}_1, \mathbf{P}_2, \ldots, \mathbf{P}_n\}$, is *linearly dependent* if there exist constants $\alpha_1, \alpha_2, \ldots, \alpha_n$, not all zero, such that

$$\alpha_1\mathbf{P}_1 + \alpha_2\mathbf{P}_2 + \cdots + \alpha_n\mathbf{P}_n = \mathbf{0} \tag{2.4}$$

Example 2.5 The set of 5-dimensional vectors

$$\{[1, 2, 0, 0, 0]^T, [1, 0, 0, 0, 0]^T, [0, 0, 1, 1, 0]^T, [0, 1, 0, 0, 0]^T\}$$

is linearly dependent, since

$$-1\begin{bmatrix}1\\2\\0\\0\\0\end{bmatrix} + 1\begin{bmatrix}1\\0\\0\\0\\0\end{bmatrix} + 0\begin{bmatrix}0\\0\\1\\1\\0\end{bmatrix} + 2\begin{bmatrix}0\\1\\0\\0\\0\end{bmatrix} = \begin{bmatrix}0\\0\\0\\0\\0\end{bmatrix}$$

Theorem 2.1: Every set of $m + 1$ or more m-dimensional vectors is linearly dependent.

A set of m-dimensional vectors, $\{\mathbf{P}_1, \mathbf{P}_2, \ldots, \mathbf{P}_n\}$, is *linearly independent* if the only constants for which (2.4) holds are $\alpha_1 = \alpha_2 = \cdots = \alpha_n = 0$. (See Problems 2.7 and 2.8.)

CONVEX COMBINATIONS

An m-dimensional vector $\mathbf{P}$ is a *convex combination* of the m-dimensional vectors $\mathbf{P}_1, \mathbf{P}_2, \ldots, \mathbf{P}_n$ if there exist nonnegative constants $\beta_1, \beta_2, \ldots, \beta_n$ whose sum is 1, such that

$$\mathbf{P} = \beta_1\mathbf{P}_1 + \beta_2\mathbf{P}_2 + \cdots + \beta_n\mathbf{P}_n \tag{2.5}$$

Example 2.6 The 2-dimensional vector $[5/3, 5/6]^T$ is a convex combination of the vectors $[1, 1]^T$, $[3, 0]^T$, and $[1, 2]^T$ because

$$\begin{bmatrix} 5/3 \\ 5/6 \end{bmatrix} = \tfrac{1}{3}\begin{bmatrix} 1 \\ 1 \end{bmatrix} + \tfrac{1}{3}\begin{bmatrix} 3 \\ 0 \end{bmatrix} + \tfrac{1}{6}\begin{bmatrix} 1 \\ 2 \end{bmatrix}$$

Given two m-dimensional vectors, $\mathbf{P}_1$ and $\mathbf{P}_2$, we call the set of all convex combinations of $\mathbf{P}_1$ and $\mathbf{P}_2$ the *line segment* between the two vectors. The geometrical significance of this term is apparent in the case $m = 3$.

CONVEX SETS

A set of m-dimensional vectors is *convex* if whenever two vectors belong to the set then so too does the line segment between the vectors.

Example 2.7 The disk shaded in Fig. 2-1(a) is a convex set since the line segment between any two of its points (2-dimensional vectors) is wholly within the disk. Figure 2-1(b) is not convex; although R and S belong to the shaded set, there exist points, such as T, belonging to the line segment between R and S which are not part of the star.

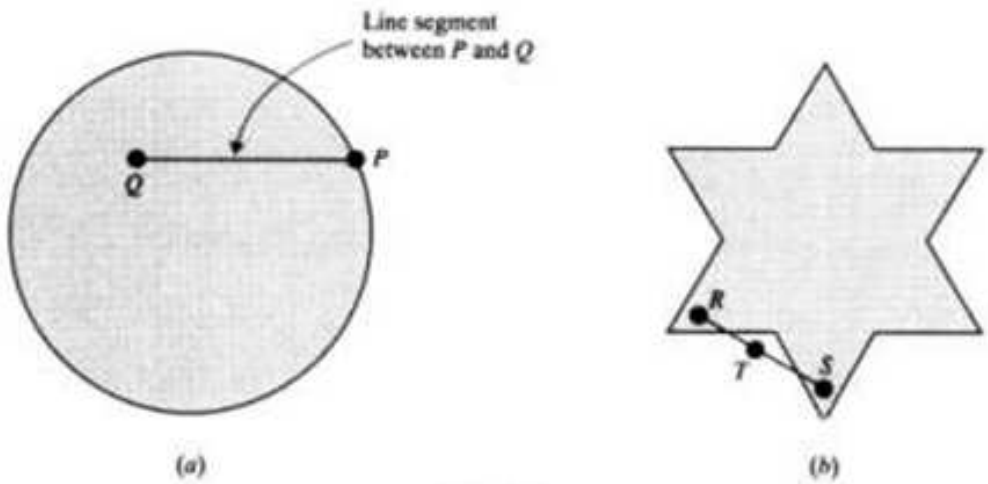

Fig. 2-1

A vector $\mathbf{P}$ is an *extreme point* of a convex set if it cannot be expressed as a convex combination of two other vectors in the set; that is, an extreme point does not lie on the line segment between any other two vectors in the set.

Example 2.8 Any point on the circumference of the disk in Fig. 2-1(a) is an extreme point of the disk.

Theorem 2.2: Any vector in a closed and bounded convex set with a finite number of extreme points can be expressed as a convex combination of the extreme points.

Theorem 2.3: The solution space of a set of simultaneous linear equations is a convex set having a finite number of extreme points.

EXTREME-POINT SOLUTIONS

Let $\mathscr{S}$ designate the set of all feasible solutions to the linear program in standard form, (*2.3*); that is, $\mathscr{S}$ is the set of all vectors $\mathbf{X}$ that satisfy $\mathbf{AX} = \mathbf{B}$ and $\mathbf{X} \geq \mathbf{0}$. From Theorem 2.3 and from the fact that convex sets intersect in convex sets (Problem 2.17), it follows that $\mathscr{S}$ is a convex set having a finite number of extreme points.

Remark 1: The objective function attains its optimum (either maximum or minimum) at an extreme point of $\mathscr{S}$, provided an optimum exists. (See Problem 2.18.)

Remark 2: If $\mathbf{A}$ has order $m \times n$ (m rows and n columns), with $m \leq n$, then extreme points of $\mathscr{S}$ have at least $n - m$ zero components. (See Problem 2.19.)

BASIC FEASIBLE SOLUTIONS

Denote the columns of the $m \times n$ coefficient matrix $\mathbf{A}$ in system (2.3) by $\mathbf{A}_1, \mathbf{A}_2, \ldots, \mathbf{A}_n$, respectively. Then the matrix constraint equation $\mathbf{AX} = \mathbf{B}$ can be rewritten in the vector form

$$x_1\mathbf{A}_1 + x_2\mathbf{A}_2 + \cdots + x_n\mathbf{A}_n = \mathbf{B} \tag{2.6}$$

We emphasize that the $\mathbf{A}$-vectors and $\mathbf{B}$ are known m-dimensional vectors; we wish to find nonnegative solutions for the variables $x_1, x_2, \ldots, x_n$. We shall suppose that $m \leq n$ and that rank $\mathbf{A} = m$, which means that at least one collection of m $\mathbf{A}$-vectors is linearly independent.

A *basic feasible solution* to (2.6) is obtained by setting $n - m$ of the x-variables equal to zero and finding a nonnegative solution for the remaining x-variables, provided the m $\mathbf{A}$-vectors corresponding to the x-variables not set equal to zero are linearly independent. The x-variables not initially set equal to zero are called *basic variables*. If one or more of the basic variables turns out to be zero, the basic feasible solution is *degenerate*; if all the basic variables are positive, the basic feasible solution is *nondegenerate*. (See Problems 2.13, 2.14, and 2.15.)

Remarks 1 and 2 above can be strengthened as follows:

Remark 1′: The objective function attains its optimum at a basic feasible solution.

Remark 2′: The extreme points of $\mathscr{S}$ are precisely the basic feasible solutions. (See Problems 2.19 and 2.20.)

It follows that the standard linear program can be solved by seeking among the basic feasible solutions the one(s) at which the objective is optimized. A computationally efficient procedure for doing so is described in Chapter 3.

Solved Problems

2.1 Put the following program in standard matrix form:

$$\begin{aligned} \text{maximize:} \quad & z = x_1 + x_2 \\ \text{subject to:} \quad & x_1 + 5x_2 \leq 5 \\ & 2x_1 + x_2 \leq 4 \\ \text{with:} \quad & x_1 \text{ and } x_2 \text{ nonnegative} \end{aligned}$$

Adding slack variables x_3 and x_4, respectively, to the left-hand sides of the constraints, and including these new variables with zero cost coefficients in the objective, we have

$$\begin{aligned} \text{maximize:} \quad & z = x_1 + x_2 + 0x_3 + 0x_4 \\ \text{subject to:} \quad & x_1 + 5x_2 + x_3 = 5 \\ & 2x_1 + x_2 + x_4 = 4 \\ \text{with:} \quad & \text{all variables nonnegative} \end{aligned} \tag{1}$$

Since each constraint equation contains a slack variable, no artificial variables are required; an initial feasible solution is $x_3 = 5$, $x_4 = 4$, $x_1 = x_2 = 0$. System (*1*) is in the standard form (*2.3*) if we define

$$\mathbf{X} \equiv [x_1, x_2, x_3, x_4]^T \qquad \mathbf{C} = [1, 1, 0, 0]^T$$

$$\mathbf{A} \equiv \begin{bmatrix} 1 & 5 & 1 & 0 \\ 2 & 1 & 0 & 1 \end{bmatrix} \qquad \mathbf{B} \equiv \begin{bmatrix} 5 \\ 4 \end{bmatrix} \qquad \mathbf{X}_0 \equiv \begin{bmatrix} x_3 \\ x_4 \end{bmatrix}$$

2.2 Put the following program in standard form:

$$\begin{aligned} \text{maximize:} \quad & z = 80x_1 + 60x_2 \\ \text{subject to:} \quad & 0.20x_1 + 0.32x_2 \le 0.25 \\ & x_1 + \quad x_2 = 1 \\ \text{with:} \quad & x_1 \text{ and } x_2 \text{ nonnegative} \end{aligned}$$

To convert the first constraint into an equality, add a slack variable x_3 to the left-hand side. Since the second constraint, an equation, does not contain a slack variable, add an artificial variable x_4 to its left-hand side. Both new variables are included in the objective function, the slack variable with a zero cost coefficient and the artificial variable with a very large negative cost coefficient, yielding the program

$$\begin{aligned} \text{maximize:} \quad & z = 80x_1 + 60x_2 + 0x_3 - Mx_4 \\ \text{subject to:} \quad & 0.20x_1 + 0.32x_2 + x_3 \qquad = 0.25 \\ & x_1 + \quad x_2 \qquad + x_4 = 1 \\ \text{with:} \quad & \text{all variables nonnegative} \end{aligned}$$

This program is in standard form, with an initial feasible solution $x_3 = 0.25$, $x_4 = 1$, $x_1 = x_2 = 0$.

2.3 Redo Problem 2.2 if the objective is to be minimized.

The only change is in the cost coefficient associated with the artificial variable; it becomes $+M$ instead of $-M$.

2.4 Put the following program in standard form:

$$\begin{aligned} \text{maximize:} \quad & z = 5x_1 + 2x_2 \\ \text{subject to:} \quad & 6x_1 + \quad x_2 \ge 6 \\ & 4x_1 + 3x_2 \ge 12 \\ & x_1 + 2x_2 \ge 4 \\ \text{with:} \quad & x_1 \text{ and } x_2 \text{ nonnegative} \end{aligned}$$

Subtracting surplus variables x_3, x_4, and x_5, respectively, from the left-hand sides of the constraints, and including each new variable with a zero cost coefficient in the objective, we obtain

$$\begin{aligned} \text{maximize:} \quad & z = 5x_1 + 2x_2 + 0x_3 + 0x_4 + 0x_5 \\ \text{subject to:} \quad & 6x_1 + \quad x_2 - x_3 \qquad\qquad = 6 \\ & 4x_1 + 3x_2 \qquad - x_4 \qquad = 12 \\ & x_1 + 2x_2 \qquad\qquad - x_5 = 4 \\ \text{with:} \quad & \text{all variables nonnegative} \end{aligned}$$

Since no constraint equation contains a slack variable, we next add artificial variables x_6, x_7, and x_8, respectively, to the left-hand sides of the equations. We also include these variables with very large negative

cost coefficients in the objective. The program becomes

$$\begin{aligned}
\text{maximize:}\quad & z = 5x_1 + 2x_2 + 0x_3 + 0x_4 + 0x_5 - Mx_6 - Mx_7 - Mx_8 \\
\text{subject to:}\quad & 6x_1 + x_2 - x_3 + x_6 = 6 \\
& 4x_1 + 3x_2 - x_4 + x_7 = 12 \\
& x_1 + 2x_2 - x_5 + x_8 = 4 \\
\text{with:}\quad & \text{all variables nonnegative}
\end{aligned}$$

This program is in standard form, with an initial feasible solution $x_6 = 6$, $x_7 = 12$, $x_8 = 4$, $x_1 = x_2 = x_3 = x_4 = x_5 = 0$.

2.5 Put the following program in standard matrix form:

$$\begin{aligned}
\text{minimize:}\quad & z = x_1 + 2x_2 + 3x_3 \\
\text{subject to:}\quad & 3x_1 + 4x_3 \le 5 \\
& 5x_1 + x_2 + 6x_3 = 7 \\
& 8x_1 + 9x_3 \ge 2 \\
\text{with:}\quad & \text{all variables nonnegative}
\end{aligned}$$

Adding a slack variable x_4 to the left-hand side of the first constraint, subtracting a surplus variable x_5 from the left-hand side of the third constraint, and then adding an artificial variable x_6 only to the left-hand side of the third constraint, we obtain the program

$$\begin{aligned}
\text{minimize:}\quad & z = x_1 + 2x_2 + 3x_3 + 0x_4 + 0x_5 + Mx_6 \\
\text{subject to:}\quad & 3x_1 + 4x_3 + x_4 = 5 \\
& 5x_1 + x_2 + 6x_3 = 7 \\
& 8x_1 + 9x_3 - x_5 + x_6 = 2 \\
\text{with:}\quad & \text{all variables nonnegative}
\end{aligned}$$

This program is in standard form, with an initial feasible solution $x_4 = 5$, $x_2 = 7$, $x_6 = 2$, $x_1 = x_3 = x_5 = 0$. It has the form of system (*2.3*) if we define

$$\mathbf{X} \equiv [x_1, x_2, x_3, x_4, x_5, x_6]^T \qquad \mathbf{C} \equiv [1, 2, 3, 0, 0, M]^T$$

$$\mathbf{A} \equiv \begin{bmatrix} 3 & 0 & 4 & 1 & 0 & 0 \\ 5 & 1 & 6 & 0 & 0 & 0 \\ 8 & 0 & 9 & 0 & -1 & 1 \end{bmatrix} \qquad \mathbf{B} \equiv \begin{bmatrix} 5 \\ 7 \\ 2 \end{bmatrix} \qquad \mathbf{X}_0 \equiv \begin{bmatrix} x_4 \\ x_2 \\ x_6 \end{bmatrix}$$

In this case, x_2 can be used to generate the initial solution rather than adding an artificial variable to the second constraint to achieve the same result. In general, whenever a variable appears in one and only one constraint equation, and there with a positive coefficient, that variable can be used to generate part of the initial solution by first dividing the constraint equation by the positive coefficient and then setting the variable equal to the right-hand side of the equation; an artificial variable need not be added to the equation.

2.6 Putting the following program in standard form:

$$\begin{aligned}
\text{minimize:}\quad & z = 25x_1 + 30x_2 \\
\text{subject to:}\quad & 4x_1 + 7x_2 \ge 1 \\
& 8x_1 + 5x_2 \ge 3 \\
& 6x_1 + 9x_2 \ge -2
\end{aligned}$$

Since both x_1 and x_2 are unrestricted, we set $x_1 = x_3 - x_4$ and $x_2 = x_5 - x_6$, where all four new variables are required to be nonnegative. Substituting these quantities into the given program and then multiplying the last constraint by -1 to force a nonnegative right-hand side, we obtain the equivalent program:

$$\begin{aligned} \text{minimize:} \quad & z = 25x_3 - 25x_4 + 30x_5 - 30x_6 \\ \text{subject to:} \quad & 4x_3 - 4x_4 + 7x_5 - 7x_6 \geq 1 \\ & 8x_3 - 8x_4 + 5x_5 - 5x_6 \geq 3 \\ & -6x_3 + 6x_4 - 9x_5 + 9x_6 \leq 2 \\ \text{with:} \quad & \text{all variables nonnegative} \end{aligned}$$

This program is converted into standard form by subtracting surplus variables x_7 and x_8, respectively, from the left-hand sides of the first two constraints; adding a slack variable x_9 to the left-hand side of the third constraint; and then adding artificial variables x_{10} and x_{11}, respectively, to the left-hand sides of the first two constraints. Doing so, we obtain

$$\begin{aligned} \text{minimize:} \quad & z = 25x_3 - 25x_4 + 30x_5 - 30x_6 + 0x_7 + 0x_8 + 0x_9 + Mx_{10} + Mx_{11} \\ \text{subject to:} \quad & 4x_3 - 4x_4 + 7x_5 - 7x_6 - x_7 + x_{10} = 1 \\ & 8x_3 - 8x_4 + 5x_5 - 5x_6 - x_8 + x_{11} = 3 \\ & -6x_3 + 6x_4 - 9x_5 + 9x_6 + x_9 = 2 \\ \text{with:} \quad & \text{all variables nonnegative} \end{aligned}$$

An initial solution to the program in standard form is

$$x_{10} = 1 \qquad x_{11} = 3 \qquad x_9 = 2 \qquad x_3 = x_4 = x_5 = x_6 = x_7 = x_8 = 0$$

2.7 Determine whether $\{[1, 2]^T, [2, 4]^T\}$ is linearly independent.

Calling the two vectors $\mathbf{P}_1$ and $\mathbf{P}_2$, it is obvious that $\mathbf{P}_2 = 2\mathbf{P}_1$, or

$$2\mathbf{P}_1 + (-1)\mathbf{P}_2 = \mathbf{0}$$

Thus the given set of vectors is linearly dependent (not linearly independent).

2.8 Is $\{[1, 1, 3, 1]^T, [1, 2, 1, 1]^T, [1, 0, 0, 1]^T\}$ linearly independent?

For these vectors, (2.4) becomes

$$\alpha_1 \begin{bmatrix} 1 \\ 1 \\ 3 \\ 1 \end{bmatrix} + \alpha_2 \begin{bmatrix} 1 \\ 2 \\ 1 \\ 1 \end{bmatrix} + \alpha_3 \begin{bmatrix} 1 \\ 0 \\ 0 \\ 1 \end{bmatrix} = \begin{bmatrix} 0 \\ 0 \\ 0 \\ 0 \end{bmatrix} \qquad \text{or} \qquad \begin{aligned} \alpha_1 + \alpha_2 + \alpha_3 &= 0 \\ \alpha_1 + 2\alpha_2 &= 0 \\ 3\alpha_1 + \alpha_2 &= 0 \\ \alpha_1 + \alpha_2 + \alpha_3 &= 0 \end{aligned}$$

The first three equations (the fourth is redundant) have $\alpha_1 = \alpha_2 = \alpha_3 = 0$ as the only solution. Therefore, the given set of vectors is linearly independent.

2.9 A vector $\mathbf{Q}$ is a *linear combination* of the vectors $\mathbf{Q}_1, \mathbf{Q}_2, \ldots, \mathbf{Q}_n$ if there exist constants $\delta_1, \delta_2, \ldots, \delta_n$, such that

$$\mathbf{Q} = \delta_1\mathbf{Q}_1 + \delta_2\mathbf{Q}_2 + \cdots + \delta_n\mathbf{Q}_n$$

Show that the set of vectors $\{\mathbf{P}_1, \mathbf{P}_2, \ldots, \mathbf{P}_n\}$ is linearly dependent if and only if one of the vectors is a linear combination of the rest.

If $\mathbf{P}_i = \delta_1\mathbf{P}_1 + \cdots + \delta_{i-1}\mathbf{P}_{i-1} + \delta_{i+1}\mathbf{P}_{i+1} + \cdots + \delta_n\mathbf{P}_n$, in which some or all of the δ's may be zero, then

$$\delta_1\mathbf{P}_1 + \cdots + \delta_{i-1}\mathbf{P}_{i-1} + (-1)\mathbf{P}_i + \delta_{i+1}\mathbf{P}_{i+1} + \cdots + \delta_n\mathbf{P}_n = \mathbf{0}$$

and so the set is linearly dependent.

On the other hand, if the set is linearly dependent, let α_j be the first nonzero coefficient in (2.4). Then,

$$\mathbf{P}_j = 0\mathbf{P}_1 + \cdots + 0\mathbf{P}_{j-1} + \left(\frac{\alpha_{j+1}}{-\alpha_j}\right)\mathbf{P}_{j+1} + \cdots + \left(\frac{\alpha_n}{-\alpha_j}\right)\mathbf{P}_n$$

i.e., $\mathbf{P}_j$ is a linear combination of the remaining vectors.

2.10 Determine whether $[1, 2, 3]^T$ is a linear combination of

$$[1, 2, 1]^T \qquad [1, 1, 1]^T \qquad [2, 3, 2]^T$$

It is not; any linear combination of the three vectors must have its first and third components equal. (More generally:

$$\begin{bmatrix}1\\2\\3\end{bmatrix} = \delta_1\begin{bmatrix}1\\2\\1\end{bmatrix} + \delta_2\begin{bmatrix}1\\1\\1\end{bmatrix} + \delta_3\begin{bmatrix}2\\3\\2\end{bmatrix} \qquad \text{iff} \qquad \begin{aligned}\delta_1 + \delta_2 + 2\delta_3 &= 1\\ 2\delta_1 + \delta_2 + 3\delta_3 &= 2\\ \delta_1 + \delta_2 + 2\delta_3 &= 3\end{aligned}$$

But this second system has no solution.)

2.11 Prove that if $\{\mathbf{P}_1, \mathbf{P}_2, \ldots, \mathbf{P}_r\}$ is a linearly independent set of vectors and $\mathbf{P}$ is a vector such that

$$\mathbf{P} = \sum_{j=1}^{r} c_j\mathbf{P}_j \qquad \text{and} \qquad \mathbf{P} = \sum_{j=1}^{r} d_j\mathbf{P}_j$$

then $c_j = d_j$ $(j = 1, 2, \ldots, r)$.

Subtracting the two representations, we obtain

$$\sum_{j=1}^{r} (c_j - d_j)\mathbf{P}_j = \mathbf{0}$$

which is (3.1) with $\alpha_j = c_j - d_j$ and $n = r$. Since $\mathbf{P}_1, \mathbf{P}_2, \ldots, \mathbf{P}_r$ are linearly independent, it follows that $c_j - d_j = 0$, or $c_j = d_j$ $(j = 1, 2, \ldots, r)$.

2.12 Write the constraint equations of the following linear program in the vector form (2.6):

$$\begin{aligned}\text{minimize:}\quad & z = 2x_1 + 3x_2 + x_3 + 0x_4 + Mx_5 + 0x_6\\ \text{subject to:}\quad & x_1 + 2x_2 + 2x_3 - x_4 + x_5 = 3\\ & 2x_1 + 3x_2 + 4x_3 + x_6 = 6\\ \text{with:}\quad & \text{all variables nonnegative}\end{aligned}$$

For this problem, (2.6) becomes

$$x_1\underbrace{\begin{bmatrix}1\\2\end{bmatrix}}_{\mathbf{A}_1} + x_2\underbrace{\begin{bmatrix}2\\3\end{bmatrix}}_{\mathbf{A}_2} + x_3\underbrace{\begin{bmatrix}2\\4\end{bmatrix}}_{\mathbf{A}_3} + x_4\underbrace{\begin{bmatrix}-1\\0\end{bmatrix}}_{\mathbf{A}_4} + x_5\underbrace{\begin{bmatrix}1\\0\end{bmatrix}}_{\mathbf{A}_5} + x_6\underbrace{\begin{bmatrix}0\\1\end{bmatrix}}_{\mathbf{A}_6} = \underbrace{\begin{bmatrix}3\\6\end{bmatrix}}_{\mathbf{B}}$$

2.13 Determine whether $[1, 0, 1, 0, 0, 0]^T$ is a basic feasible solution to the linear program given in Problem 2.12.

Although all its components are nonnegative, the proposed solution is not basic. The vectors $\mathbf{A}_1$ and $\mathbf{A}_3$ associated with the x-variables not set equal to zero are not linearly independent (Problem 2.7).

2.14 Determine whether $[1, 0, 0, 0, 2, 4]^T$ is a basic feasible solution to the linear program given in Problem 2.12.

The coefficient matrix $\mathbf{A}$, comprising the column vectors $\mathbf{A}_1$ through $\mathbf{A}_6$, has order 2×6. Therefore, a basic feasible solution must have at least $6 - 2 = 4$ zero components (variables), which is not the case here.

2.15 Find two different basic feasible solutions to the linear program given in Problem 2.12.

Since $n - m = 4$, a basic feasible solution will have four x-variables set equal to zero. With x_1 through x_4 made zero, the vector constraint equation becomes

$$x_5\begin{bmatrix}1\\0\end{bmatrix} + x_6\begin{bmatrix}0\\1\end{bmatrix} = \begin{bmatrix}3\\6\end{bmatrix}$$

which has the (nonnegative) solution $x_5 = 3$, $x_6 = 6$. Since $\mathbf{A}_5$ and $\mathbf{A}_6$ are linearly independent, the complete solution, $[0, 0, 0, 0, 3, 6]^T$, is basic. Here the basic variables are x_5 and x_6, and since both of them are positive, the solution is also nondegenerate.

To obtain a second basic feasible solution, we set $x_3 = x_4 = x_5 = x_6 = 0$, whereupon the vector constraint equation becomes

$$x_1\begin{bmatrix}1\\2\end{bmatrix} + x_2\begin{bmatrix}2\\3\end{bmatrix} = \begin{bmatrix}3\\6\end{bmatrix}$$

Solving this equation for x_1 and x_2, we find $x_1 = 3$ and $x_2 = 0$. The corresponding $\mathbf{A}$-vectors, $\mathbf{A}_1$ and $\mathbf{A}_2$, are linearly independent, so the complete solution, $[3, 0, 0, 0, 0, 0]^T$, is basic. The basic variables are x_1 and x_2 and since one of them is zero, the solution is degenerate.

2.16 Determine whether the vector $[0, 7]^T$ is a convex combination of the set $\{[3, 6]^T, [-6, 9]^T, [2, 1]^T, [-1, 1]^T\}$.

For these vectors, (2.5) becomes

$$\begin{bmatrix}0\\7\end{bmatrix} = \beta_1\begin{bmatrix}3\\6\end{bmatrix} + \beta_2\begin{bmatrix}-6\\9\end{bmatrix} + \beta_3\begin{bmatrix}2\\1\end{bmatrix} + \beta_4\begin{bmatrix}-1\\1\end{bmatrix}$$

or

$$\begin{aligned} 3\beta_1 - 6\beta_2 + 2\beta_3 - \beta_4 &= 0 \\ 6\beta_1 + 9\beta_2 + \beta_3 + \beta_4 &= 7 \end{aligned} \tag{1}$$

To these equations we add a third condition,

$$\beta_1 + \beta_2 + \beta_3 + \beta_4 = 1 \tag{2}$$

We must determine whether there exist *nonnegative* values of β_1, β_2, β_3, and β_4 that simultaneously satisfy (1) and (2). Solving these equations, we obtain

$$\beta_1 = \tfrac{2}{3} + \tfrac{1}{2}\beta_4 \qquad \beta_2 = \tfrac{1}{3} - \tfrac{3}{16}\beta_4 \qquad \beta_3 = (-19/16)\beta_4$$

with β_4 arbitrary. The choice $\beta_4 = 0$ is forced, giving

$$\beta_1 = \tfrac{2}{3} \qquad \beta_2 = \tfrac{1}{3} \qquad \beta_3 = 0 \qquad \beta_4 = 0$$

as an acceptable set of constants. Thus, $[0, 7]^T$ is a convex combination of the given set of four vectors.

2.17 If $\mathscr{Q}$ and $\mathscr{R}$ are convex sets, show that their intersection $\mathscr{Q} \cap \mathscr{R}$ is a convex set.

Let $\mathbf{X}$ and $\mathbf{Y}$ be any two vectors in $\mathscr{Q} \cap \mathscr{R}$. Then the line segment between $\mathbf{X}$ and $\mathbf{Y}$ is in $\mathscr{Q}$ (because $\mathbf{X}$ and $\mathbf{Y}$ are in $\mathscr{Q}$, and $\mathscr{Q}$ is convex) and it is in $\mathscr{R}$ (similarly). Thus, the line segment is in $\mathscr{Q} \cap \mathscr{R}$; and so $\mathscr{Q} \cap \mathscr{R}$ is convex.

In the case that $\mathscr{B}$ and $\mathscr{H}$ are convex polyhedra (have finitely many extreme points), it is intuitively obvious that the intersection is also a convex polyhedron.

2.18 Prove that the objective function $z = f(\mathbf{X}) = \mathbf{C}^T\mathbf{X}$ of system (2.3) assumes its optimum (say, a minimum) at an extreme point of $\mathscr{S}$, provided a minimum exists and $\mathscr{S}$ is bounded.

If a minimum exists, then there exists a point $\mathbf{X}_0 \in \mathscr{S}$ such that

$$f(\mathbf{X}_0) \le f(\mathbf{X}) \quad \text{for all } \mathbf{X} \in \mathscr{S} \tag{1}$$

If $\mathbf{X}_0$ is an extreme point of $\mathscr{S}$, we are done. If not, we must produce an extreme point $\mathbf{X}_m$ such that $f(\mathbf{X}_m) = f(\mathbf{X}_0)$.

Now, $\mathscr{S}$ has only a finite number of extreme points: we designate them as $\mathbf{X}_1, \mathbf{X}_2, \ldots, \mathbf{X}_p$. Because $\mathscr{S}$ is bounded (as well as being closed), Theorem 2.2 ensures that $\mathbf{X}_0$ can be written as a convex combination of these extreme points; i.e., there exist nonnegative β_j $(j = 1, 2, \ldots, p)$, whose sum is 1, such that

$$\mathbf{X}_0 = \sum_{j=1}^{p} \beta_j \mathbf{X}_j$$

Let the minimum of $f(\mathbf{X})$ over the extreme points be assumed at $\mathbf{X}_m$. By (1), $f(\mathbf{X}_0) \le f(\mathbf{X}_m)$. But

$$f(\mathbf{X}_0) = f\left(\sum_{j=1}^{p} \beta_j \mathbf{X}_j\right) = \sum_{j=1}^{p} \beta_j f(\mathbf{X}_j) \ge \sum_{j=1}^{p} \beta_j f(\mathbf{X}_m) = f(\mathbf{X}_m) \sum_{j=1}^{p} \beta_j = f(\mathbf{X}_m) \tag{2}$$

Consequently, $f(\mathbf{X}_0) = f(\mathbf{X}_m)$, and so there is an extreme point, namely $\mathbf{X}_m$, at which $f(\mathbf{X})$ assumes its minimum.

According to the fundamental *Weierstrass theorem* (Theorem 10.1), a continuous function—in particular, a linear function such as $f(\mathbf{X})$—actually assumes a minimum value on a closed and bounded region. We conclude that the standard linear program always possesses an extreme-point optimal solution when $\mathscr{S}$ is bounded. If $\mathscr{S}$ is not bounded, the optimum may not exist; however, if it does exist, it is again assumed at an extreme point.

2.19 Prove that every extreme point of $\mathscr{S}$ has at least $n - m$ zero components and is a basic feasible solution.

Let $\mathbf{X} = [x_1, x_2, \ldots, x_n]^T$ be an extreme point of $\mathscr{S}$. Without loss of generality, we can assume that the x-variables have been indexed so that $x_1, x_2, \ldots, x_r$ $(r \le n)$ are positive and all subsequent components of $\mathbf{X}$, if any, are zero. Since $\mathbf{X} \in \mathscr{S}$, we have $\mathbf{AX} = \mathbf{B}$, which, as a consequence of $x_j = 0$ for $j > r$, can be written in the vector form

$$\sum_{j=1}^{r} x_j \mathbf{A}_j = \mathbf{B} \tag{1}$$

We first show that the vectors $\mathbf{A}_j$ involved in (1) are linearly independent. *Assume they are not.* Then there exists constants $\alpha_1, \alpha_2, \ldots, \alpha_r$, not all zero, such that

$$\sum_{j=1}^{r} \alpha_j \mathbf{A}_j = \mathbf{0} \tag{2}$$

Let θ be a positive number; then (1) and (2) give

$$\sum_{j=1}^{r} (x_j + \theta\alpha_j)\mathbf{A}_j = \mathbf{B} \quad \text{and} \quad \sum_{j=1}^{r} (x_j - \theta\alpha_j)\mathbf{A}_j = \mathbf{B} \tag{3}$$

If θ is chosen small enough so that $x_j + \theta\alpha_j$ and $x_j - \theta\alpha_j$ remain positive for all $j = 1, 2, \ldots, r$, then it follows directly from (3) that

$$\mathbf{X}_1 = [x_1 + \theta\alpha_1, x_2 + \theta\alpha_2, \ldots, x_r + \theta\alpha_r, 0, 0, \ldots, 0]^T$$
$$\mathbf{X}_2 = [x_1 - \theta\alpha_1, x_2 - \theta\alpha_2, \ldots, x_r - \theta\alpha_r, 0, 0, \ldots, 0]^T$$

are *distinct* elements of $\mathscr{S}$. But then $\mathbf{X} = \frac{1}{2}\mathbf{X}_1 + \frac{1}{2}\mathbf{X}_2$, which is impossible, since $\mathbf{X}$ is an extreme point of $\mathscr{S}$. Thus, $\{\mathbf{A}_1, \mathbf{A}_2, \ldots, \mathbf{A}_r\}$ must be a linearly independent set.

Since the vectors are m-dimensional, it follows from Theorem 2.1 that there can be no more than m of them which are linearly independent; accordingly, $r \le m$. But all components of $\mathbf{X}$ past the rth one are zero; hence $\mathbf{X}$ must have at least $n - m$ zero components.

In case $r = m$, the above proof at once establishes that $\mathbf{X}$ is a basic feasible solution. If $r < m$, we can always (supposing rank $\mathbf{A} = m$) identify $m - r$ zero components of $\mathbf{X}$ such that their corresponding $\mathbf{A}$-vectors combine with $\mathbf{A}_1, \mathbf{A}_2, \ldots, \mathbf{A}_r$ to make up a linearly independent set. Thus, once more, $\mathbf{X}$ is a basic feasible solution.

2.20 Prove that every basic feasible solution is an extreme point of $\mathscr{S}$.

Let $\mathbf{X}$ be a basic feasible solution. Then, $\mathbf{X} \in \mathscr{S}$ and at least $n - m$ of the components of $\mathbf{X}$ are zero. Without loss of generality, we can assume that the x-variables have been indexed so that the positive components of $\mathbf{X}$ appear first:

$$\mathbf{X} = [x_1, x_2, \ldots, x_s, 0, 0, \ldots, 0]^T \tag{1}$$

with $x_j > 0$ $(j = 1, 2, \ldots, s)$ and $s \le m$. Consequently, the equality $\mathbf{AX} = \mathbf{B}$ can be written in the vector form

$$\sum_{j=1}^{s} x_j \mathbf{A}_j = \mathbf{B}$$

where, as a result of $\mathbf{X}$ being basic, the set $\{\mathbf{A}_1, \mathbf{A}_2, \ldots, \mathbf{A}_s\}$ is linearly independent (see Problem 2.35).

Assume that $\mathbf{X}$ *is not an extreme point of* $\mathscr{S}$. Then $\mathbf{X}$ can be expressed as a convex combination of two other points in $\mathscr{S}$:

$$\mathbf{X} = \beta_1 \mathbf{X}_1 + \beta_2 \mathbf{X}_2 \qquad \text{where} \qquad \mathbf{X}_1 \ne \mathbf{X}_2 \tag{2}$$

Since the components of $\mathbf{X}_1$ and $\mathbf{X}_2$ are nonnegative, and the constants β_1 and β_2 are strictly positive, it follows from (1) and (2) that the last $n - s$ components of $\mathbf{X}_1$ and $\mathbf{X}_2$ also are zero. Therefore,

$$\mathbf{X}_1 = [c_1, c_2, \ldots, c_s, 0, 0, \ldots, 0]^T \qquad \mathbf{X}_2 = [d_1, d_2, \ldots, d_s, 0, 0, \ldots, 0]^T \tag{3}$$

In view of (3), $\mathbf{AX}_1 = \mathbf{B}$ and $\mathbf{AX}_2 = \mathbf{B}$ take the vector forms

$$\sum_{j=1}^{s} c_j \mathbf{A}_j = \mathbf{B} \qquad \text{and} \qquad \sum_{j=1}^{s} d_j \mathbf{A}_j = \mathbf{B}$$

Using the result of Problem 2.11, we conclude that $c_j = d_j$, whence $\mathbf{X}_1 = \mathbf{X}_2$. This contradiction establishes that $\mathbf{X}$ is, in fact, an extreme point.

2.21 Show that the initial solution $\mathbf{X}_0$ generated in this chapter is a basic feasible solution.

The set of $\mathbf{A}$-vectors corresponding to the initial solution are the columns of the $m \times m$ identity matrix, which are linearly independent.

Supplementary Problems

Put each of the following programs in matrix standard form.

2.22

$$\begin{aligned} \text{minimize:} \quad & z = 2x_1 - x_2 + 4x_3 \\ \text{subject to:} \quad & 5x_1 + 2x_2 - 3x_3 \ge -7 \\ & 2x_1 - 2x_2 + x_3 \le 8 \\ \text{with:} \quad & x_1 \text{ nonnegative} \end{aligned}$$

2.23

$$\begin{aligned} \text{maximize:} \quad & z = 10x_1 + 11x_2 \\ \text{subject to:} \quad & x_1 + 2x_2 \le 150 \\ & 3x_1 + 4x_2 \le 200 \\ & 6x_1 + x_2 \le 175 \\ \text{with:} \quad & x_1 \text{ and } x_2 \text{ nonnegative} \end{aligned}$$

2.24 Problem 2.23 with the three constraint inequalities reversed.

2.25

$$\begin{aligned} \text{minimize:} \quad & z = 3x_1 + 2x_2 + 4x_3 + 6x_4 \\ \text{subject to:} \quad & x_1 + 2x_2 + x_3 + x_4 \ge 1000 \\ & 2x_1 + x_2 + 3x_3 + 7x_4 \ge 1500 \\ \text{with:} \quad & \text{all variables nonnegative} \end{aligned}$$

2.26

$$\begin{aligned} \text{minimize:} \quad & z = 6x_1 + 3x_2 + 4x_3 \\ \text{subject to:} \quad & x_1 + 6x_2 + x_3 = 10 \\ & 2x_1 + 3x_2 + x_3 = 15 \\ \text{with:} \quad & \text{all variables nonnegative} \end{aligned}$$

2.27

$$\begin{aligned} \text{maximize:} \quad & z = 7x_1 + 2x_2 + 3x_3 + x_4 \\ \text{subject to:} \quad & 2x_1 + 7x_2 = 7 \\ & 5x_1 + 8x_2 + 2x_4 = 10 \\ & x_1 + x_3 = 11 \\ \text{with:} \quad & x_1, x_2, \text{ and } x_3 \text{ nonnegative} \end{aligned}$$

2.28

$$\begin{aligned} \text{minimize:} \quad & z = 10x_1 + 2x_2 - x_3 \\ \text{subject to:} \quad & x_1 + x_2 \le 50 \\ & x_1 + x_2 \ge 10 \\ & x_2 + x_3 \le 30 \\ & x_2 + x_3 \ge 7 \\ & x_1 + x_2 + x_3 = 60 \\ \text{with:} \quad & \text{all variables nonnegative} \end{aligned}$$

2.29 Determine graphically whether $[1, 2]^T$ is a convex combination of $[1, 1]^T$ and $[2, -1]^T$.

2.30 Write the constraint equations for the following linear program in vector form:

$$\begin{aligned} \text{minimize:} \quad & z = x_1 + 2x_2 + 0x_3 + Mx_4 + 0x_5 \\ \text{subject to:} \quad & x_1 + 2x_2 + x_3 = 3 \\ & 2x_1 + 4x_2 - x_4 + x_5 = 6 \\ \text{with:} \quad & \text{all variables nonnegative} \end{aligned}$$

2.31 Determine which of the following vectors are basic feasible solutions to the linear program of Problem 2.30. Are any of the basic feasible solutions degenerate?

(*a*) $[1, 1, 0, 0, 0]^T$ (*b*) $[3, 0, 0, 0, 0]^T$ (*c*) $[0, 0, 3, 0, 6]^T$ (*d*) $[0, 0, 3, 2, 8]^T$

2.32 Write the constraint equations for the following linear program in vector form:

$$\begin{aligned} \text{maximize:} \quad & z = x_1 + 2x_2 + 3x_3 + 4x_4 + 0x_5 + 0x_6 + 0x_7 \\ \text{subject to:} \quad & x_1 + 2x_2 + x_3 + 3x_4 + x_5 = 9 \\ & 2x_1 + x_2 + 3x_4 + x_6 = 9 \\ & -x_1 + x_2 + x_3 + x_7 = 0 \\ \text{with:} \quad & \text{all variables nonnegative} \end{aligned}$$

2.33 Determine which of the following vectors are basic feasible solutions to the linear program of Problem 2.32. Are any of the basic feasible solutions degenerate?

(*a*) $[3, 3, 0, 0, 0, 0, 0]^T$ (*c*) $[0, 0, 0, 3, 0, 0, 0]^T$ (*e*) $[1, 0, 0, 0, 8, 7, 1]^T$

(*b*) $[2, 2, 0, 1, 0, 0, 0]^T$ (*d*) $[0, 0, 0, 0, 9, 9, 0]^T$ (*f*) $[0, 0, 9, 0, 0, 9, -9]^T$

2.34 Prove that if a linear function assumes its minimum at two different points of a convex set, then it assumes this minimum on the entire line segment between the points.

2.35 Prove that every nonempty subset of a linearly independent set of vectors is itself linearly independent.

2.36 Prove that any set of vectors containing the zero vector is linearly dependent.

Chapter 3

Linear Programming: The Simplex and the Dual Simplex Methods

THE SIMPLEX TABLEAU

The *simplex method* is a matrix procedure for solving linear programs in the standard form

$$\begin{aligned} \text{optimize:} \quad & z = \mathbf{C}^T\mathbf{X} \\ \text{subject to:} \quad & \mathbf{AX} = \mathbf{B} \\ \text{with:} \quad & \mathbf{X} \geq \mathbf{0} \end{aligned}$$

where $\mathbf{B} \geq \mathbf{0}$ and a basic feasible solution $\mathbf{X}_0$ is known (Problem 2.21). Starting with $\mathbf{X}_0$, the method locates successively other basic feasible solutions having better values of the objective, until the optimal solution is obtained. For minimization programs, the simplex method utilizes Tableau 3-1, in which $\mathbf{C}_0$ designates the cost vector associated with the variables in $\mathbf{X}_0$.

		$\mathbf{X}^T$ $\mathbf{C}^T$	
$\mathbf{X}_0$	$\mathbf{C}_0$	$\mathbf{A}$	$\mathbf{B}$
		$\mathbf{C}^T - \mathbf{C}_0^T\mathbf{A}$	$-\mathbf{C}_0^T\mathbf{B}$

Tableau 3-1

For maximization programs, Tableau 3-1 applies if the elements of the bottom row have their *signs reversed*.

Example 3.1 For the minimization program of Problem 2.5, $\mathbf{C}_0 = [0, 2, M]^T$. Then,

$$\mathbf{C}^T - \mathbf{C}_0^T\mathbf{A} = [1, 2, 3, 0, 0, M] - [0, 2, M]\begin{bmatrix} 3 & 0 & 4 & 1 & 0 & 0 \\ 5 & 1 & 6 & 0 & 0 & 0 \\ 8 & 0 & 9 & 0 & -1 & 1 \end{bmatrix}$$

$$= [1, 2, 3, 0, 0, M] - [10 + 8M, 2, 12 + 9M, 0, -M, M] = [-9 - 8M, 0, -9 - 9M, 0, M, 0]$$

$$-\mathbf{C}_0^T\mathbf{B} = -[0, 2, M]\begin{bmatrix} 5 \\ 7 \\ 2 \end{bmatrix} = -14 - 2M$$

and Tableau 3-1 becomes

		x_1 1	x_2 2	x_3 3	x_4 0	x_5 0	x_6 M	
x_4	0	3	0	4	1	0	0	5
x_2	2	5	1	6	0	0	0	7
x_6	M	8	0	9	0	-1	1	2
		$-9 - 8M$	0	$-9 - 9M$	0	M	0	$-14 - 2M$

Copyrighted Material

A TABLEAU SIMPLIFICATION

For each j ($j = 1, 2, \ldots, n$), define $z_j \equiv \mathbf{C}_0^T \mathbf{A}_j$, the dot product of $\mathbf{C}_0$ with the jth column of $\mathbf{A}$. The jth entry in the last row of Tableau 3-1 is $c_j - z_j$ (or, for a maximization program, $z_j - c_j$), where c_j is the cost in the second row of the tableau, immediately above $\mathbf{A}_j$. Once this last row has been obtained, the second row and second column of the tableau, corresponding to $\mathbf{C}^T$ and $\mathbf{C}_0$, respectively, become superfluous and may be eliminated.

THE SIMPLEX METHOD

STEP 1: Locate the most negative number in the bottom row of the simplex tableau, excluding the last column, and call the column in which this number appears the *work column*. If more than one candidate for most negative numbers exists, choose one.

STEP 2: Form ratios by dividing each *positive* number in the work column, excluding the last row, into the element in the same row and last column. Designate the element in the work column that yields the *smallest* ratio as the *pivot element*. If more than one element yields the same smallest ratio, choose one. If no element in the work column is positive, the program has no solution.

STEP 3: Use elementary row operations to convert the pivot element to 1 and then to reduce all *other* elements in the work column to 0.

STEP 4: Replace the x-variable in the pivot row and first column by the x-variable in the first row and pivot column. This new first column is the current set of basic variables (see Chapter 2).

STEP 5: Repeat Steps 1 through 4 until there are no negative numbers in the last row, excluding the last column.

STEP 6: The optimal solution is obtained by assigning to each variable in the first column that value in the corresponding row and last column. All other variables are assigned the value zero. The associated z^*, the optimal value of the objective function, is the number in the last row and last column for a maximization program, but the *negative* of this number for a minimization program.

MODIFICATIONS FOR PROGRAMS WITH ARTIFICIAL VARIABLES

Whenever artificial variables are part of the initial solution $\mathbf{X}_0$, the last row of Tableau 3-1 will contain the penalty cost M (see Chapter 2). To minimize roundoff error (see Problem 3.6), the following modifications are incorporated into the simplex method; the resulting algorithm is the *two-phase method*.

Change 1: The last row of Tableau 3-1 is decomposed into two rows, the first of which involves those terms not containing M, while the second involves the coefficients of M in the remaining terms.

Example 3.2 The last row of the tableau in Example 3.1 is

$$-9-8M \quad 0 \quad -9-9M \quad 0 \quad M \quad 0 \quad -14-2M$$

Under Change 1 it would be transformed into the two rows

$$\begin{array}{ccccccc} -9 & 0 & -9 & 0 & 0 & 0 & -14 \\ -8 & 0 & -9 & 0 & 1 & 0 & -2 \end{array}$$

Change 2: Step 1 of the simplex method is applied to the last row created in Change 1 (followed by Steps 2, 3, and 4), until this row contains no negative elements. Then Step 1 is applied to those elements in the next-to-last row that are positioned over zeros in the last row.

Change 3: Whenever an artificial variable ceases to be basic—i.e., is removed from the first column of the tableau as a result of Step 4—it is deleted from the top row of the tableau, as is the entire column under it. (This modification simplifies hand calculations but is not implemented in many computer programs.)

Change 4: The last row can be deleted from the tableau whenever it contains all zeros.

Change 5: If *nonzero* artificial variables are present in the final basic set, then the program has no solution. (In contrast, zero-valued artificial variables may appear as basic variables in the final solution when one or more of the original constraint equations is redundant.)

THE DUAL SIMPLEX METHOD

The (regular) simplex method moves the initial feasible but nonoptimal solution to an optimal solution while maintaining feasibility through an iterative procedure. On the other hand, the dual simplex method moves the initial optimal but infeasible solution to a feasible solution while maintaining optimality through an iterative procedure.

Iterative procedure of the Dual Simplex Method:

STEP 1: Rewrite the linear programming problem by expressing all the constraints in $\leq$ form and transforming them into equations through slack variables.

STEP 2: Exhibit the above problem in the form of a simplex tableau. If the optimality condition is satisfied *and* one or more basic variables have negative values, the dual simplex method is applicable.

STEP 3: Feasibility Condition: The basic variable with the most negative value becomes the departing variable (D.V.). Call the row in which this value appears the work row. If more than one candidate for D.V. exists, choose one.

STEP 4: Optimality Condition: Form ratios by dividing all but the last element of the last row of $c_j - z_j$ values (minimization problem) or the $z_j - c_j$ values (maximization problem) by the corresponding negative coefficients of the work row. The nonbasic variable with the smallest absolute ratio becomes the entering variable (E.V.). Designate this element in the work row as the pivot element and the corresponding column the work column. If more than one candidate for E.V. exists, choose one. If no element in the work row is negative, the problem has no feasible solution.

STEP 5: Use elementary row operations to convert the pivot element to 1 and then to reduce all the other elements in the work column to zero.

STEP 6: Repeat steps 3 through 5 until there are no negative values for the basic variables.

Solved Problems

3.1

$$\begin{aligned} \text{maximize:} \quad & z = x_1 + 9x_2 + x_3 \\ \text{subject to:} \quad & x_1 + 2x_2 + 3x_3 \leq 9 \\ & 3x_1 + 2x_2 + 2x_3 \leq 15 \\ \text{with:} \quad & \text{all variables nonnegative} \end{aligned}$$

This program is put into matrix standard form by first introducing slack variables x_4 and x_5 in the first and second constraint inequalities, respectively, and then defining

$$\mathbf{X} \equiv [x_1, x_2, x_3, x_4, x_5]^T \qquad \mathbf{C} \equiv [1, 9, 1, 0, 0]^T$$

$$\mathbf{A} \equiv \begin{bmatrix} 1 & 2 & 3 & 1 & 0 \\ 3 & 2 & 2 & 0 & 1 \end{bmatrix} \qquad \mathbf{B} \equiv \begin{bmatrix} 9 \\ 15 \end{bmatrix} \qquad \mathbf{X}_0 = \begin{bmatrix} x_4 \\ x_5 \end{bmatrix}$$

The costs associated with the components of $\mathbf{X}_0$, the slack variables, are zero; hence $\mathbf{C}_0 \equiv [0, 0]^T$. Tableau 3-1 becomes

		x_1	x_2	x_3	x_4	x_5	
		1	9	1	0	0	
x_4	0	1	2	3	1	0	9
x_5	0	3	2	2	0	1	15

To compute the last row of this tableau, we use the tableau simplification and first calculate each z_j by inspection: it is the dot product of column 2 and the jth column of $\mathbf{A}$. We then subtract the corresponding cost c_j from it (maximization program). In this case, the second column is zero, and so $z_j - c_j = 0 - c_j = -c_j$. Hence, the bottom row of the tableau, excluding the last element, is just the negative of row 2. The last element in the bottom row is simply the dot product of column 2 and the final, $\mathbf{B}$-column, and so it too is zero. At this point, the second row and second column of the tableau are superfluous. Eliminating them, we obtain Tableau 1 as the complete initial tableau.

	x_1	x_2	x_3	x_4	x_5	
x_4	1	2*	3	1	0	9
x_5	3	2	2	0	1	15
$(z_j - c_j)$:	−1	−9	−1	0	0	0

Tableau 1

	x_1	x_2	x_3	x_4	x_5	
x_2	1/2	1	3/2	1/2	0	9/2
x_5	2	0	−1	−1	1	6
	7/2	0	25/2	9/2	0	81/2

Tableau 2

We are now ready to apply the simplex method. The most negative element in the last row of Tableau 1 is -9, corresponding to the x_2-column; hence this column becomes the work column. Forming the ratios $9/2 = 4.5$ and $15/2 = 7.5$, we find that the element 2, marked by the asterisk in Tableau 1, is the pivot element, since it yields the smallest ratio. Then, applying Steps 3 and 4 to Tableau 1, we obtain Tableau 2. Since the last row of Tableau 2 contains no negative elements, it follows from Step 6 that the optimal solution is $x_2^* = 9/2$, $x_5^* = 6$, $x_1^* = x_3^* = x_4^* = 0$, with $z^* = 81/2$.

3.2

$$\begin{aligned} \text{minimize:} \quad & z = 80x_1 + 60x_2 \\ \text{subject to:} \quad & 0.20x_1 + 0.32x_2 \le 0.25 \\ & x_1 + \quad x_2 = 1 \\ \text{with:} \quad & x_1 \text{ and } x_2 \text{ nonnegative} \end{aligned}$$

Adding a slack variable x_3 and an artificial variable x_4 to the first and second constraints, respectively, we convert the program to standard matrix form, with

$$\mathbf{X} \equiv [x_1, x_2, x_3, x_4]^T \qquad \mathbf{C} \equiv [80, 60, 0, M]^T$$

$$\mathbf{A} \equiv \begin{bmatrix} 0.20 & 0.32 & 1 & 0 \\ 1 & 1 & 0 & 1 \end{bmatrix} \qquad \mathbf{B} \equiv \begin{bmatrix} 0.25 \\ 1 \end{bmatrix} \qquad \mathbf{X}_0 = \begin{bmatrix} x_3 \\ x_4 \end{bmatrix}$$

Substituting these matrices, along with $\mathbf{C}_0 = [0, M]^T$, into Tableau 3-1, we obtain Tableau 0. Since the bottom row involves M, we apply Change 1; the resulting Tableau 1 is the initial tableau for the two-phase method.

		x_1	x_2	x_3	x_4	
		80	60	0	M	
x_3	0	0.20	0.32	1	0	0.25
x_4	M	1	1	0	1	1
		$80 - M$	$60 - M$	0	0	$-M$

Tableau 0

	x_1	x_2	x_3	x_4	
x_3	0.20	0.32	1	0	0.25
x_4	1*	1	0	1	1
$(c_j - z_j)$:	80	60	0	0	0
	-1	-1	0	0	-1

Tableau 1

	x_1	x_2	x_3	
x_3	0	0.12*	1	0.05
x_1	1	1	0	1
	0	-20	0	-80
	0	0	0	0

Tableau 2

Using both Step 1 of the simplex method and Change 2, we find that the most negative element in the last row of Tableau 1 (excluding the last column) is -1, which appears twice. Arbitrarily selecting the x_1-column as the work column, we form the ratios $0.25/0.20 = 1.25$ and $1/1 = 1$. Since the element 1, starred in Tableau 1, yields the smallest ratio, it becomes the pivot. Then, applying Steps 3 and 4 and Change 3 to Tableau 1, we generate Tableau 2. Observe that x_1 replaces the artificial variable x_4 in the first column of Tableau 2, so that the entire x_4-column is absent from Tableau 2. Now, with no artificial variables in the first column and with Change 3 implemented, the last row of the tableau should be all zeros. It is; and by Change 4 this row may be deleted, giving

$$0 \quad -20 \quad 0 \quad -80$$

as the new last row of Tableau 2.

Repeating Steps 1 through 4, we find that the x_2-column is the new work column (recall that the last element in the last row is excluded under Step 1), the starred element in Tableau 2 is the new pivot, and the elementary row operations yield Tableau 3, in which all calculations have been rounded to four significant figures. Since the last row of Tableau 3, excluding the last column, contains no negative elements, it follows from Step 6 that $x_1^* = 0.5833$, $x_2^* = 0.4167$, $x_3^* = x_4^* = 0$, with $z^* = 71.67$. (Compare with Problem 1.2.)

	x_1	x_2	x_3	
x_2	0	1	8.333	0.4167
x_1	1	0	-8.333	0.5833
	0	0	166.7	-71.67

Tableau 3

3.3

$$\begin{aligned} \text{maximize:} \quad & z = 5x_1 + 2x_2 \\ \text{subject to:} \quad & 6x_1 + x_2 \geq 6 \\ & 4x_1 + 3x_2 \geq 12 \\ & x_1 + 2x_2 \geq 4 \\ \text{with:} \quad & \text{all variables nonnegative} \end{aligned}$$

This program is put into standard form by introducing surplus variables x_3, x_4, and x_5, respectively, in the constraint inequalities, and then artificial variables x_6, x_7, and x_8, respectively, in the resulting equations. Then, applying the two-phase method and rounding all calculations to four significant figures, we generate sequentially the following tableaux, in each of which the pivot element is marked by an asterisk.

		x_1	x_2	x_3	x_4	x_5	x_6	x_7	x_8	
		5	2	0	0	0	$-M$	$-M$	$-M$	
x_6	$-M$	6*	1	−1	0	0	1	0	0	6
x_7	$-M$	4	3	0	−1	0	0	1	0	12
x_8	$-M$	1	2	0	0	−1	0	0	1	4
$(z_j - c_j)$:		−5	−2	0	0	0	0	0	0	0
		−11	−6	1	1	1	0	0	0	−22

Tableau 1

	x_1	x_2	x_3	x_4	x_5	x_7	x_8	
x_1	1	0.1667	−0.1667	0	0	0	0	1
x_7	0	2.333	0.6668	−1	0	1	0	8
x_8	0	1.833*	0.1667	0	−1	0	1	3
	0	−1.167	−0.8335	0	0	0	0	5
	0	−4.166	−0.8337	1	1	0	0	−11

Tableau 2

	x_1	x_2	x_3	x_4	x_5	x_7	
x_1	1	0	−0.1819	0	0.09095	0	0.7271
x_7	0	0	0.4546	−1	1.273*	1	4.181
x_2	0	1	0.09094	0	−0.5456	0	1.637
	0	0	−0.7274	0	−0.6367	0	6.910
	0	0	−0.4548	1	−1.273	0	−4.180

Tableau 3

	x_1	x_2	x_3	x_4	x_5	
x_1	1	0	−0.2144	0.07144*	0	0.4284
x_5	0	1	0.3571	−0.7855	1	3.284
x_2	0	1	0.2858	−0.4286	0	3.429
	0	0	−0.5000	−0.5001	0	9.001
	0	0	−0.0002	0.0001	0	0.0005

Tableau 4

	x_1	x_2	x_3	x_4	x_5	
x_4	14.00	0	−3.001	1	0	6.000
x_5	11.00	0	−2.000	0	1	7.997
x_2	6.000	1	−1.000	0	0	6.001
	7.001	0	−2.001	0	0	12.00

Tableau 5

Tableau 4 is the first tableau containing no artificial variables in its first column, hence, with Change 3 implemented, the last row of the tableau should be zero. To within roundoff errors it is zero, so we delete it from the Tableau. Tableau 5, however, presents a problem that cannot be ignored: the work column is the x_3-column and all the elements in that column are negative! It follows from Step 2 that the original program has no solution. (It is easy to show graphically that the feasible region is infinite and that the objective function can be made arbitrarily large by choosing feasible points with arbitrarily large coordinates.)

3.4

$$\begin{aligned} \text{maximize:} \quad & z = 2x_1 + 3x_2 \\ \text{subject to:} \quad & x_1 + 2x_2 \le 2 \\ & 6x_1 + 4x_2 \ge 24 \\ \text{with:} \quad & \text{all variables nonnegative} \end{aligned}$$

This program is put in standard form by introducing a slack variable x_3 to the first constraint, and both a surplus variable x_4 and an artificial variable x_5 to the second constraint. Then Tableau 3-1, with Change 1, becomes Tableau 1.

		x_1	x_2	x_3	x_4	x_5	
		2	3	0	0	$-M$	
x_3	0	1*	2	1	0	0	2
x_5	$-M$	6	4	0	−1	1	24
$(z_j - c_j)$:		−2	−3	0	0	0	0
		−6	−4	0	1	0	−24

Tableau 1

	x_1	x_2	x_3	x_4	x_5	
x_1	1	2	1	0	0	2
x_5	0	−8	−6	−1	1	12
	0	1	2	0	0	4
	0	8	6	1	0	−12

Tableau 2

Applying the two-phase algorithm to Tableau 1 (the pivot element is starred), we generate Tableau 2. Now, there are no negative entries in the last row of Tableau 2, and in the next-to-last row there is no

negative entry positioned above a zero of the last row. Thus, the two-phase method signals that optimality has been achieved. But the nonzero artificial variable x_5 is still basic! By Change 5, the original program has no solution. (In this case $\mathscr{S}$ is empty, as the constraint inequalities and the nonnegativity conditions cannot be satisfied simultaneously.)

3.5

$$\begin{aligned}
\text{maximize:}\quad & z = -x_5 \\
\text{subject to:}\quad & 3x_1 - 2x_2 - 4x_3 + 6x_4 - x_5 \le 0 \\
& -4x_1 + 2x_2 - x_3 - 8x_4 - x_5 \le 0 \\
& -3x_2 - 2x_3 - x_4 - x_5 \le 0 \\
& x_1 + x_2 + x_3 + x_4 \le 1 \\
& -x_1 - x_2 - x_3 - x_4 \le -1 \\
\text{with:}\quad & x_1, x_2, x_3, x_4 \text{ nonnegative}
\end{aligned}$$

Since x_5 is unrestricted, we set $x_5 = x_6 - x_7$, where both x_6 and x_7 are nonnegative; then all variables are nonnegative. We multiply the last constraint by -1, thereby forcing a positive right-hand side. Finally, we achieve standard form by adding slack variables x_8 through x_{11}, respectively, to the left-hand sides of the first four constraints, and subtracting surplus variable x_{12} and adding artificial variable x_{13} to the left-hand side of the last constraint. The initial tableau for the two-phase method is Tableau 1, from which are derived Tableaux 2, 3, . . . , 6. From Tableau 3 on, the bottom row is permanently nonnegative, and Step 1 of the simplex method is restricted to those elements of the next-to-last row that are situated above the zeros of the last row. From Tableau 6,

$$x_1^* = 0 \qquad x_2^* = 0.11667 \qquad x_3^* = 0.7 \qquad x_4^* = 0.18333 \qquad x_5^* = x_6^* - x_7^* = -1.93334$$

with $z^* = 1.93334$.

		x_1	x_2	x_3	x_4	x_6	x_7	x_8	x_9	x_{10}	x_{11}	x_{12}	x_{13}	
		0	0	0	0	−1	1	0	0	0	0	0	$-M$	
x_8	0	3*	−2	−4	6	−1	1	1	0	0	0	0	0	0
x_9	0	−4	2	−1	−8	−1	1	0	1	0	0	0	0	0
x_{10}	0	0	−3	−2	−1	−1	1	0	0	1	0	0	0	0
x_{11}	0	1	1	1	1	0	0	0	0	0	1	0	0	1
x_{13}	$-M$	1	1	1	1	0	0	0	0	0	0	−1	1	1
$(z_j - c_j)$:		0	0	0	0	1	−1	0	0	0	0	0	0	0
		−1	−1	−1	−1	0	0	0	0	0	0	1	0	−1

Tableau 1

	x_1	x_2	x_3	x_4	x_6	x_7	x_8	x_9	x_{10}	x_{11}	x_{12}	x_{13}	
x_1	1	−0.666667	−1.33333	2	−0.333333	0.333333	0.333333	0	0	0	0	0	0
x_9	0	−0.666668	−6.33332	0	−2.333333	2.33333	1.33333	1	0	0	0	0	0
x_{10}	0	−3	−2	−1	−1	1	0	0	1	0	0	0	0
x_{11}	0	1.66667	2.33333*	−1	0.333333	−0.333333	−0.333333	0	0	1	0	0	1
x_{13}	0	1.66667	2.33333	−1	0.333333	−0.333333	−0.333333	0	0	0	−1	1	1
	0	0	0	0	1	−1	0	0	0	0	0	0	0
	0	−1.666667	−2.33333	1	−0.333333	0.333333	0.333333	0	0	0	1	0	−1

Tableau 2

	x_1	x_2	x_3	x_4	x_6	x_7	x_8	x_9	x_{10}	x_{11}	x_{12}	x_{13}	
x_1	1	0.285715	0	1.42857	−0.142857	0.142857	0.142857	0	0	0.571428	0	0	0.571428
x_9	0	3.85715	0	−2.71428	−1.42857	1.42857	0.428571	1	0	2.71427	0	0	2.71427
x_{10}	0	−1.57142	0	−1.85714	−0.714286	0.714286*	−0.285714	0	1	0.857144	0	0	0.857144
x_3	0	0.714288	1	−0.428572	0.142857	−0.142857	−0.142857	0	0	0.428572	0	0	0.428572
x_{13}	0	0	0	0	0	0	0	0	0	−1	−1	1	0
	0	0	0	0	1	−1	0	0	0	0	0	0	0
	0	0	0	0	0	0	0	0	0	1	1	0	0

Tableau 3

	x_1	x_2	x_3	x_4	x_6	x_7	x_8	x_9	x_{10}	x_{11}	x_{12}	x_{13}	
x_4	0.583333	0	0	1	0	0	0.0666667	−0.05	−0.0166668	0.183333	0	0	0.183333
x_2	−0.0833332	1	0	0	0	0	0.133333	0.15	−0.283333	0.116667	0	0	0.116667
x_7	1.33333	0	0	0	−1	1	0.0666671	0.20	0.733334	1.93334	0	0	1.93334
x_3	0.499999	0	1	0	0	0	−0.200000	−0.10	0.300000	0.700000	0	0	0.700000
x_{13}	0	0	0	0	0	0	0	0	0	−1	−1	1	0
	1.33333	0	0	0	0	0	0.0666659	0.20	0.733333	1.93334	0	0	1.93334
	0	0	0	0	0	0	0	0	0	1	1	0	0

Tableau 6

3.6 Solve the following program using the simplex method without any of the modifications (such a procedure is known as the *Big M method*) and show how roundoff could affect the answer:

$$\begin{aligned} \text{maximize:} \quad & z = -8x_1 + 3x_2 - 6x_3 \\ \text{subject to:} \quad & x_1 - 3x_2 + 5x_3 = 4 \\ & 5x_1 + 3x_2 - 4x_3 \geq 6 \\ \text{with:} \quad & \text{all variables nonnegative} \end{aligned}$$

This program is put in standard form by introducing the surplus variable x_4 in the inequality constraint and then artificial variables x_5 and x_6 in the two equality constraints. Substituting the appropriate coefficients into Tableau 3-1 and then applying the simplex method directly, with all calculations rounded to four significant figures and with the pivot elements designated by stars, we generate successively Tableaux 1 through 4.

		x_1	x_2	x_3	x_4	x_5	x_6	
		−8	3	−6	0	$-M$	$-M$	
x_5	$-M$	1	−3	5	0	1	0	4
x_6	$-M$	5*	3	−4	−1	0	1	6
$(z_j - c_j)$:		$-6M+8$	−3	$-M+6$	M	0	0	$-10M$

Tableau 1

	x_1	x_2	x_3	x_4	x_5	x_6	
x_5	0	-3.6	5.8*	0.2	1	-0.2	2.8
x_1	1	0.6	-0.8	-0.2	0	0.2	1.2
	0	$3.6M-7.8$	$-5.8M+12.4$	$-0.2M+1.6$	0	$1.2M-1.6$	$-2.8M-9.6$

Tableau 2

	x_1	x_2	x_3	x_4	x_5	x_6	
x_3	0	-0.6207	1	0.03448	0.1724	-0.03448	0.4828
x_1	1	0.1034*	0	-0.1724	0.1379	0.1724	1.586
	0	-0.1033	0	1.172	$M-2.138$	$M-1.172$	-15.59

Tableau 3

	x_1	x_2	x_3	x_4	x_5	x_6	
x_3	6.003	0	1	-10.00	1.000	10.00	10.00
x_2	9.671	1	0	-1.667	1.334	1.667	15.34
	0.9990	0	0	0.9998	$M-2$	$M-0.9998$	-14.01

Tableau 4

Since M designates a large positive number, all the entries in the last row of Tableau 4, excluding the entry in the last column, are nonnegative. The optimal solution, therefore, can be read directly from it as $x_3^* = 10.00$, $x_2^* = 15.34$, and all other variables zero, with $z^* = -14.01$.

The quantity M in the previous calculations could be left as a letter only because those calculations were done by hand. Had a computer been used, a large numerical value would necessarily have been substituted for M; say, $M = 10\,000$. Then, assuming again that all numbers are rounded to *four* significant figures, the bottom row of Tableau 1 becomes

$$-60\,000 \qquad -3 \qquad -10\,000 \qquad 10\,000 \qquad 0 \qquad 0 \qquad -100\,000$$

Note that the additive constants $+8$ in the first entry and $+6$ in the third entry are lost in roundoff. The bottom row of Tableau 2 becomes

$$0 \qquad 36\,000 \qquad -58\,000 \qquad -2\,000 \qquad 12\,000 \qquad -28\,000$$

while the bottom row of Tableau 3 is

$$0 \qquad 0 \qquad 0 \qquad 0 \qquad 10\,000 \qquad 10\,000 \qquad 0$$

which signals optimality! The erroneous optimal solution would be read from Tableau 3 as $x_3^* = 0.4828$, $x_1^* = 1.586$, and all other variables zero, with $z^* = 0$.

This roundoff problem does not occur in the two-phase method since the terms that do not involve M are separated from those that do, making it impossible for the M-terms to "swamp" the others.

3.7 Solve Problem 1.7.

Using the mathematical program defined by system *(12)* in Problem 1.7, we introduce slack variables x_5 through x_{12}, one each to the first eight inequality constraints; surplus variables x_{13} and x_{14}, one each to the last two inequality constraints; and artificial variables x_{15} and x_{16}, one each to the last two constraints.

Entering the appropriate coefficients into Tableau 3-1 and using Change 1, we get Tableau 1. Then, applying the two-phase method, we generate Tableaux 2, . . . , 5. The optimal solution is read directly from Tableau 5 as $x_1^* = 37\,727.3$ bbl, $x_2^* = 12\,272.7$ bbl, $x_3^* = 2272.7$ bbl, $x_4^* = 2727.3$ bbl, with $z^* = \$125\,000$.

		x_1	x_2	x_3	x_4	x_5	x_6	x_7	x_8	x_9	x_{10}	x_{11}	x_{12}	x_{13}	x_{14}	x_{15}	x_{16}	
		4	−3	6	−1	0	0	0	0	0	0	0	0	0	0	$-M$	$-M$	
x_5	0	1	1	0	0	1	0	0	0	0	0	0	0	0	0	0	0	100 000
x_6	0	0	0	1	1	0	1	0	0	0	0	0	0	0	0	0	0	20 000
x_7	0	1	0	1	0	0	0	1	0	0	0	0	0	0	0	0	0	40 000
x_8	0	0	1	0	1	0	0	0	1	0	0	0	0	0	0	0	0	60 000
x_9	0	1	−10	0	0	0	0	0	0	1	0	0	0	0	0	0	0	0
x_{10}	0	0	0	6	−5	0	0	0	0	0	1	0	0	0	0	0	0	0
x_{11}	0	2	−8	0	0	0	0	0	0	0	0	1	0	0	0	0	0	0
x_{12}	0	0	0	2	−8	0	0	0	0	0	0	0	1	0	0	0	0	0
x_{15}	$-M$	1	1	0	0	0	0	0	0	0	0	0	0	−1	0	1	0	50 000
x_{16}	$-M$	0	0	1	1*	0	0	0	0	0	0	0	0	0	−1	0	1	5 000
$(z_j - c_j)$:		−4	3	−6	1	0	0	0	0	0	0	0	0	0	0	0	0	0
		−1	−1	−1	−1	0	0	0	0	0	0	0	0	1	1	0	0	−55 000

Tableau 1

	x_1	x_2	x_3	x_4	x_5	x_6	x_7	x_8	x_9	x_{10}	x_{11}	x_{12}	x_{13}	x_{14}	x_{15}	
x_5	1	1	0	0	1	0	0	0	0	0	0	0	0	0	0	100 000
x_6	0	0	0	0	0	1	0	0	0	0	0	0	0	1	0	15 000
x_7	1	0	1	0	0	0	1	0	0	0	0	0	0	0	0	40 000
x_8	0	1	−1	0	0	0	0	1	0	0	0	0	0	1	0	55 000
x_9	1	−10	0	0	0	0	0	0	1	0	0	0	0	0	0	0
x_{10}	0	0	11	0	0	0	0	0	0	1	0	0	0	−5	0	25 000
x_{11}	2	−8	0	0	0	0	0	0	0	0	1	0	0	0	0	0
x_{12}	0	0	10	0	0	0	0	0	0	0	0	1	0	−8	0	40 000
x_{15}	1	1*	0	0	0	0	0	0	0	0	0	0	−1	0	1	50 000
x_4	0	0	1	1	0	0	0	0	0	0	0	0	0	−1	0	5 000
	−4	3	−7	0	0	0	0	0	0	0	0	0	0	1	0	−5 000
	−1	−1	0	0	0	0	0	0	0	0	0	0	1	0	0	−50 000

Tableau 2

	x_1	x_2	x_3	x_4	x_5	x_6	x_7	x_8	x_9	x_{10}	x_{11}	x_{12}	x_{13}	x_{14}	
x_5	0	0	0	0	1	0	0	0	0	0	0	0	1	0	50 000
x_6	0	0	0	0	0	1	0	0	0	0	0	0	0	1	15 000
x_1	1	0	0	0	0	0	1	0	0	−0.0909	0	0	0	0.4545	37 727.3
x_8	0	0	0	0	0	0	1	1	0	0	0	0	1	1	45 000
x_9	0	0	0	0	0	0	−11	0	1	1	0	0	−10	−5	85 000
x_3	0	0	1	0	0	0	0	0	0	0.0909	0	0	0	−0.4545	2 272.7
x_{11}	0	0	0	0	0	0	−10	0	0	0.9091	1	0	−8	−4.5455	22 727.2
x_{12}	0	0	0	0	0	0	0	0	0	−0.9091	0	1	0	−3.4545	17 272.7
x_2	0	1	0	0	0	0	−1	0	0	0.0909	0	0	−1	−0.4545	12 272.7
x_4	0	0	0	1	0	0	0	0	0	−0.0909	0	0	0	−0.5455	2 727.3
	0	0	0	0	0	0	7	0	0	0	0	0	3	1	125 000

Tableau 5

Under this optimal production schedule, Aztec will produce $x_1^* + x_2^* = 50\,000$ bbl of regular having a vapor pressure of 22.5 and an octane rating of 89.7. It will also produce $x_3^* + x_4^* = 5000$ bbl of premium having a vapor pressure of 19.5 and an octane rating of 93.0. Thus, it will produce exactly the amount needed to meet its minimum supply requirements, and no more. To do so, Actec will use $x_1^* + x_3^* = 40\,000$ bbl of its domestic inventory—all it has—and $x_2^* + x_4^* = 15\,000$ bbl of its foreign inventory.

3.8 Demonstrate the validity of the simplex method by solving Problem 3.2 algebraically.

The program in standard form is

$$\begin{aligned} \text{minimize:}\quad & z = 80x_1 + 60x_2 + 0x_3 + Mx_4 \\ \text{subject to:}\quad & 0.20x_1 + 0.32x_2 + x_3 \qquad = 0.25 \\ & x_1 + \quad x_2 \qquad + x_4 = 1 \qquad (1) \\ \text{with:}\quad & \text{all variables nonnegative} \end{aligned}$$

Applying the theory developed in Chapter 2 to this system, we have $n = 4$ (variables) and $m = 2$ (constraint equations), so that an extreme point of the feasible region $\mathscr{S}$ must have at least $n - m = 2$ zero components. Since the minimum must occur at an extreme point, these are the only candidates we need consider.

An initial extreme-point solution to system (*1*) is $x_1 = x_2 = 0$, $x_3 = 0.25$, $x_4 = 1$. We determine whether this solution can be improved by writing the objective function solely in terms of those variables currently set equal to zero, here x_1 and x_2. (We are assured that the constraint equations can be solved for x_3 and x_4 in terms of x_1 and x_2 because our extreme-point solution is a basic feasible solution.) Solving the second constraint equation for x_4 and substituting in the objective function, we obtain

$$z = (80 - M)x_1 + (60 - M)x_2 + M \qquad (2)$$

Compare system (*1*) with Tableau 0 of Problem 3.2, and note how (*2*) is given by the bottom row of the tableau.

In the current solution, $x_1 = x_2 = 0$ and, from (*2*), $z = M$. The objective function can be reduced substantially if either x_1 or x_2 is allowed to become positive; we arbitrarily select x_1. Now, the first constraint in system (*1*) limits x_1 to no more than $0.25/0.20 = 1.25$ units, if the remaining variables are to remain nonnegative; while the second constraint limits x_1 to no more than 1 unit, for the same reason. Since both constraints must be satisfied, x_1 can be no larger than 1 unit. Setting $x_1 = 1$, which is tantamount to setting $x_2 = x_4 = 0$, we obtain from the constraint equations $x_3 = 0.05$. These values constitute the new extreme-point (basic) solution to the program.

The artificial variable x_4 was introduced initially only to provide a first solution. Ultimately, this variable must be zero. Since we now have a solution to the program in which $x_4 = 0$, we can omit this variable from further consideration and restrict ourselves to the program

$$\begin{aligned} \text{minimize:}\quad & z = 80x_1 + 60x_2 + 0x_3 \qquad (3) \\ \text{subject to:}\quad & 0.20x_1 + 0.32x_2 + x_3 = 0.25 \qquad (4) \\ & x_1 + \quad x_2 \qquad = 1 \qquad (5) \\ \text{with:}\quad & \text{all variables nonnegative} \end{aligned}$$

of which an extreme-point solution ($x_1 = 1$, $x_2 = 0$, $x_3 = 0.05$) is known. Observe that this modified program has $n = 3$ variables and $m = 2$ constraint equations, so that extreme points must possess at least $3 - 2 = 1$ zero-valued variables.

To determine whether the starting solution for the new program can be improved, we solve (*5*)—the equation that restricted x_1—for x_1 and substitute the result into (*3*) and (*4*). The program becomes

$$\begin{aligned} \text{minimize:}\quad & z = 0x_1 - 20x_2 + 0x_3 + 80 \qquad (6) \\ \text{subject to:}\quad & 0.12x_2 + x_3 = 0.05 \qquad (7) \\ & x_1 + \quad x_2 \qquad = 1 \qquad (8) \\ \text{with:}\quad & \text{all variables nonnegative} \end{aligned}$$

Compare this program with Tableau 2 of Problem 3.2.

In the current solution, $x_2 = 0$, and it follows from (6) that $z = 80$. It is obvious from this equation, however, that z will be reduced if x_2 is increased. Constraint (7) limits x_2 to $0.05/0.12 = 5/12$, if the other variables are to remain nonnegative; while (8) limits x_2 to 1. Since both constraints must be obeyed, x_2 cannot be increased beyond 5/12. Setting $x_2 = 5/12$, which forces $x_3 = 0$, we find from (8) that $x_1 = 7/12$. This is the new extreme-point solution to the program.

To determine whether this solution can be improved, we solve (7)—the equation that restricted x_2—for x_2 and substitute the result in (6) and (8). The program becomes

$$\text{minimize:} \quad z = 0x_1 + 0x_2 + 166.7x_3 + 71.67 \tag{9}$$

$$\text{subject to:} \quad x_2 + 8.333x_3 = 0.4167 \tag{10}$$

$$x_1 \quad - 8.333x_3 = 0.5833 \tag{11}$$

$$\text{with:} \quad \text{all variables nonnegative}$$

Equation (10) is just (7) divided through by 0.12. Compare the form of this program with Tableau 3 of Problem 3.2.

In the current solution, $x_3 = 0$, so it follows from (9) that $z = 71.67$. It also follows from (9) that no positive allocation to x_3 will reduce z below this value. In fact, any such allocation will increase z. Thus, the current solution is an optimal one.

3.9 Use the dual simplex method to solve the following problem.

$$\begin{aligned} \text{minimize:} \quad & z = 2x_1 + x_2 + 3x_3 \\ \text{subject to:} \quad & x_1 - 2x_2 + x_3 \geq 4 \\ & 2x_1 + x_2 + x_3 \leq 8 \\ & x_1 \qquad - x_3 \geq 0 \\ \text{with:} \quad & \text{all variables nonnegative} \end{aligned}$$

Expressing all the constraints in the $\leq$ form and adding the slack variables, the problem becomes:

$$\begin{aligned} \text{minimize:} \quad & z = 2x_1 + x_2 + 3x_3 + 0x_4 + 0x_5 + 0x_6 \\ \text{subject to:} \quad & -x_1 + 2x_2 - x_3 + x_4 = -4 \\ & 2x_1 + x_2 + x_3 + x_5 = 8 \\ & -x_1 + x_3 + x_6 = 0 \\ \text{with:} \quad & \text{all variables nonnegative} \end{aligned}$$

	x_1	x_2	x_3	x_4	x_5	x_6	
x_4	-1^*	2	-1	1	0	0	-4
x_5	2	1	1	0	1	0	8
x_6	-1	0	1	0	0	1	0
$(c_j - z_j)$:	2	1	3	0	0	0	0

Tableau 1

Since all the $(c_j - z_j)$ values are nonnegative, the above solution is optimal. However, it is infeasible because it has a nonpositive value for the basic variable x_4. Since x_4 is the only nonpositive variable, it becomes the departing variable (D.V.).

	x_1	x_2	x_3	x_4	x_5	x_6
$(c_j - z_j)$ row:	2	1	3	0	0	0
x_4 row:	−1	2	−1	1	0	0
absolute ratios:	2	–	3	–	–	–

Since x_1 has the smallest absolute ratio, it becomes the entering variable (E.V.). Thus the element -1, marked by the asterisk, becomes the pivot element. Using elementary row operations, we obtain Tableau 2.

	x_1	x_2	x_3	x_4	x_5	x_6	
x_1	1	−2	1	−1	0	0	4
x_5	0	5	−1	2	1	0	0
x_6	0	−2	2	−1	0	1	4
$(c_j - z_j)$:	0	5	1	2	0	0	−8

Tableau 2

Since all the variables have nonnegative values, the above optimal solution is feasible. The optimal and feasible solution is $x_1^* = 4$, $x_2^* = 0$, $x_3^* = 0$, with $z^* = 8$.

3.10 Use the dual simplex method to solve the following problem.

$$\begin{aligned} \text{maximize:} \quad & z = -2x_1 - 3x_2 \\ \text{subject to:} \quad & x_1 + x_2 \geq 2 \\ & 2x_1 + x_2 \leq 10 \\ & x_1 + x_2 \leq 8 \\ \text{with:} \quad & x_1 \text{ and } x_2 \text{ nonnegative} \end{aligned}$$

Expressing all the constraints in the $\leq$ form and adding the slack variables, the problem becomes:

$$\begin{aligned} \text{maximize:} \quad & z = -2x_1 - 3x_2 + 0x_3 + 0x_4 + 0x_5 \\ \text{subject to:} \quad & -x_1 - x_2 + x_3 = -2 \\ & 2x_1 + x_2 + x_4 = 10 \\ & x_1 + x_2 + x_5 = 8 \\ \text{with:} \quad & \text{all variables nonnegative} \end{aligned}$$

	x_1	x_2	x_3	x_4	x_5	
x_3	−1*	−1	1	0	0	−2
x_4	2	1	0	1	0	10
x_5	1	1	0	0	1	8
$(z_j - c_j)$:	2	3	0	0	0	0

Tableau 1

Since all the $(z_j - c_j)$ values are nonnegative, the above solution is optimal. However, it is infeasible because it has a nonpositive value for the basic variable x_3. Since x_3 is the only nonpositive variable, it becomes the departing variable (D.V.).

	x_1	x_2	x_3	x_4	x_5
$(z_j - c_j)$ row:	2	3	0	0	0
x_3 row:	−1	−1	1	0	0
absolute ratios:	2	3	–	–	–

Since x_1 has the smallest absolute ratio, it becomes the entering variable (E.V.). Thus the element −1, marked by the asterisk, is the pivot element. Using elementary row operations, we obtain Tableau 2.

	x_1	x_2	x_3	x_4	x_5	
x_1	1	1	−1	0	0	2
x_4	0	−1	2	1	0	6
x_5	0	0	1	0	1	6
$(z_j - c_j)$:	0	1	2	0	0	−4

Tableau 2

Since all the variables have nonnegative values, the above optimal solution is feasible. The optimal and feasible solution is $x_1^* = 2$, $x_2^* = 0$, with $z^* = -4$.

3.11 Use the dual simplex method to solve the following problem.

$$\begin{aligned} \text{minimize:}\quad & z = 4x_1 + 3x_2 + 2x_3 + 5x_4 \\ \text{subject to:}\quad & x_1 + 2x_2 + 3x_3 + x_4 \geq 5 \\ & 2x_1 - x_2 + 5x_3 - x_4 \geq 1 \\ & 2x_1 + x_2 + x_3 + 3x_4 \geq 10 \\ \text{with:}\quad & \text{all variables nonnegative} \end{aligned}$$

Expressing all the constraints in the $\leq$ form and adding the slack variables, the problem becomes:

$$\begin{aligned} \text{minimize:}\quad & z = 4x_1 + 3x_2 + 2x_3 + 5x_4 + 0x_5 + 0x_6 + 0x_7 \\ \text{subject to:}\quad & -x_1 - 2x_2 - 3x_3 - x_4 + x_5 = -5 \\ & -2x_1 + x_2 - 5x_3 + x_4 + x_6 = -1 \\ & -2x_1 - x_2 - x_3 - 3x_4 + x_7 = -10 \\ \text{with:}\quad & \text{all variables nonnegative} \end{aligned}$$

	x_1	x_2	x_3	x_4	x_5	x_6	x_7	
x_5	−1	−2	−3	−1	1	0	0	−5
x_6	−2	1	−5	1	0	1	0	−1
x_7	−2	−1	−1	−3*	0	0	1	−10
$(c_j - z_j)$:	4	3	2	5	0	0	0	0

Tableau 1

Since all the $(c_j - z_j)$ values are nonnegative, the above solution is optimal. However, it is infeasible because it has nonpositive values for the basic variables x_5, x_6, and x_7. Since x_7 has the most nonpositive value, it becomes the departing variable (D.V.).

	x_1	x_2	x_3	x_4	x_5	x_6	x_7
$(c_j - z_j)$ row:	4	3	2	5	0	0	0
x_7 row:	−2	−1	−1	−3	0	0	1
absolute ratios:	2	3	2	5/3	–	–	–

Since x_4 has the smallest absolute ratio, it becomes the entering variable (E.V.). Thus the element −3, marked by the asterisk, becomes the pivot element. Using elementary row operations, we obtain Tableau 2.

	x_1	x_2	x_3	x_4	x_5	x_6	x_7	
x_5	−1/3	−5/3	−8/3	0	1	0	−1/3	−5/3
x_6	−8/3	2/3	**−16/3***	0	0	1	1/3	−13/3
x_4	2/3	1/3	1/3	1	0	0	−1/3	10/3
$(c_j - z_j)$:	2/3	4/3	1/3	0	0	0	5/3	−50/3

Tableau 2

Since x_6 has the most nonpositive value, it becomes the departing variable (D.V.).

	x_1	x_2	x_3	x_4	x_5	x_6	x_7
$(c_j - z_j)$ row:	2/3	4/3	1/3	0	0	0	−5/3
x_6 row:	−8/3	2/3	−16/3	0	0	1	1/3
absolute ratios:	1/4	–	1/16	–	–	–	–

Since x_3 has the smallest absolute ratio, it becomes the entering variable (E.V.). Thus the element −16/3, marked by the asterisk, becomes the pivot element. Using elementary row operations, we obtain Tableau 3.

	x_1	x_2	x_3	x_4	x_5	x_6	x_7	
x_5	1	2	0	0	1	−1/2	−1/2	1/2
x_3	1/2	−1/8	1	0	0	−3/16	−1/16	13/16
x_4	1/2	9/24	0	1	0	1/16	15/48	147/48
$(c_j - z_j)$:	1/2	33/24	0	0	0	1/16	81/48	−813/48

Tableau 3

Since all the variables have nonnegative values, the above optimal solution is feasible. The optimal and feasible solution is $x_1^* = 0$, $x_2^* = 0$, $x_3^* = 13/16$, $x_4^* = 147/48$, with $z^* = 813/48$.

3.12 Use the dual simplex method to solve the following problem.

$$\begin{aligned} \text{maximize:} \quad & z = -x_1 - x_2 - 3x_3 \\ \text{subject to:} \quad & x_1 + 2x_2 + 4x_3 \geq 2 \\ & 2x_1 + x_2 + 5x_3 \leq 3 \\ & x_1 + 2x_2 + 3x_3 \leq 3 \\ \text{with:} \quad & \text{all variables nonnegative} \end{aligned}$$

Expressing all the constraints in the $\leq$ form and adding the slack variables, the problem becomes:

$$\begin{aligned} \text{maximize:} \quad & z = -x_1 - x_2 - 3x_3 + 0x_4 + 0x_5 + 0x_6 \\ \text{subject to:} \quad & -x_1 - 2x_2 - 4x_3 + x_4 = -2 \\ & 2x_1 + x_2 + 5x_3 + x_5 = 3 \\ & x_1 + 2x_2 + 3x_3 + x_6 = 3 \\ \text{with:} \quad & \text{all variables nonnegative} \end{aligned}$$

	x_1	x_2	x_3	x_4	x_5	x_6	
x_4	-1	-2^*	-4	1	0	0	-2
x_5	2	1	5	0	1	0	3
x_6	1	2	3	0	0	1	3
$(z_j - c_j)$:	1	1	3	0	0	0	0

Tableau 1

Since all the $(z_j - c_j)$ are nonnegative, the above solution is optimal. However, it is infeasible because it has a nonpositive value for the variable x_4. Since x_4 is the only nonpositive variable, it becomes the departing variable (D.V.).

	x_1	x_2	x_3	x_4	x_5	x_6
$(z_j - c_j)$ row:	1	1	3	0	0	0
x_4 row:	-1	-2	-4	1	0	0
absolute ratios:	1	1/2	3/4	–	–	–

Since x_2 has the smallest absolute ratio, it becomes the entering variable (E.V.). Thus the element -2, marked by the asterisk, is the pivot element. Using elementary row operations, we obtain Tableau 2.

	x_1	x_2	x_3	x_4	x_5	x_6	
x_2	1/2	0	2	$-1/2$	0	0	1
x_5	3/2	0	3	1/2	1	0	2
x_6	0	0	-1	1	0	1	1
$(z_j - c_j)$:	1/2	0	1	1/2	0	0	-1

Tableau 2

Since all the variables have nonnegative values, the above optimal solution is feasible. The optimal and feasible solution is $x_1^* = 0$, $x_2^* = 1$, $x_3^* = 0$, with $z^* = -1$.

3.13 Use the dual simplex method to solve the following problem.

$$\begin{aligned} \text{minimize:} \quad & z = 2x_1 + x_2 \\ \text{subject to:} \quad & x_1 + x_2 = 4 \\ & 2x_1 - x_2 \geq 3 \\ \text{with:} \quad & x_1 \text{ and } x_2 \text{ nonnegative} \end{aligned}$$

The above problem is rewritten as follows:

$$\begin{aligned} \text{minimize:} \quad & z = 2x_1 + x_2 \\ \text{subject to:} \quad & x_1 + x_2 \leq 4 \\ & x_1 + x_2 \geq 4 \\ & 2x_1 - x_2 \geq 3 \\ \text{with:} \quad & x_1 \text{ and } x_2 \text{ nonnegative} \end{aligned}$$

Expressing all the constraints in the $\leq$ form and adding the slack variables, the problem becomes:

$$\begin{aligned} \text{minimize:} \quad & z = 2x_1 + x_2 + 0x_3 + 0x_4 + 0x_5 \\ \text{subject to:} \quad & x_1 + x_2 + x_3 = 4 \\ & -x_1 - x_2 + x_4 = -4 \\ & -2x_1 + x_2 + x_5 = -3 \\ \text{with:} \quad & \text{all variables nonnegative} \end{aligned}$$

	x_1	x_2	x_3	x_4	x_5	
x_3	1	1	1	0	0	4
x_4	−1	−1*	0	1	0	−4
x_5	−2	1	0	0	1	−3
$(c_j - z_j)$:	2	1	0	0	0	0

Tableau 1

Since all the $(c_j - z_j)$ values are nonnegative, the above solution is optimal. However, it is infeasible because x_4 and x_5 have nonpositive values. Since x_4 has the most nonpositive value, it becomes the departing variable (D.V.).

	x_1	x_2	x_3	x_4	x_5
$(c_j - z_j)$ row:	2	1	0	0	0
x_4 row:	−1	−1	0	1	0
absolute ratios:	2	1	–	–	–

Since x_2 has the smallest absolute ratio, it becomes the entering variable (E.V.). Thus the element −1, marked by the asterisk, becomes the pivot element. Using elementary row operations, we obtain Tableau 2.

	x_1	x_2	x_3	x_4	x_5	
x_3	0	0	1	0	1	0
x_2	1	1	0	0	−1	4
x_5	**−3***	0	0	1	1	−7
$(c_j - z_j)$:	1	0	0	0	1	−4

Tableau 2

Since x_5 is the only nonpositive variable, it becomes the departing variable (D.V.).

	x_1	x_2	x_3	x_4	x_5
$(c_j - z_j)$ row:	1	0	0	0	1
x_5 row:	−3	0	0	1	1
absolute ratios:	1/3	–	–	–	–

Obviously x_1 becomes the entering variable E.V. (rule: the variable with the smallest absolute ratio is the E.V.).

	x_1	x_2	x_3	x_4	x_5	
x_3	0	0	1	1	0	0
x_2	0	1	0	−2/3	1/3	5/3
x_1	1	0	0	−1/3	−1/3	7/3
$(c_j - z_j)$:	0	0	0	4/3	1/3	−19/3

Tableau 3

Since all the variables have nonnegative values, the above optimal solution is feasible. The optimal and feasible solution is $x_1^* = 7/3$, $x_2^* = 5/3$ with $z^* = 19/3$.

3.14 Use the dual simplex method to solve the following problem.

$$\begin{aligned} \text{minimize:} \quad & z = 6x_1 + 3x_2 + 4x_3 \\ \text{subject to:} \quad & x_1 + 6x_2 + x_3 = 10 \\ & 2x_1 + 3x_2 + x_3 = 15 \\ \text{with:} \quad & \text{all variables nonnegative} \end{aligned}$$

The above problem is rewritten as follows:

$$\begin{aligned} \text{minimize:} \quad & z = 6x_1 + 3x_2 + 4x_3 \\ \text{subject to:} \quad & x_1 + 6x_2 + x_3 \le 10 \\ & x_1 + 6x_2 + x_3 \ge 10 \\ & 2x_1 + 3x_2 + x_3 \le 15 \\ & 2x_1 + 3x_2 + x_3 \ge 15 \\ \text{with:} \quad & \text{all variables nonnegative} \end{aligned}$$

Expressing all the constraints in the $\leq$ form and adding the slack variables, the problem becomes:

$$\begin{aligned}
\text{minimize:}\quad & z = 6x_1 + 3x_2 + 4x_3 + 0x_4 + 0x_5 + 0x_6 + 0x_7 \\
\text{subject to:}\quad & x_1 + 6x_2 + x_3 + x_4 = 10 \\
& -x_1 - 6x_2 - x_3 + x_5 = 10 \\
& 2x_1 + 3x_2 + x_3 + x_6 = 15 \\
& -2x_1 - 3x_2 - x_3 + x_7 = 15 \\
\text{with:}\quad & \text{all variables nonnegative}
\end{aligned}$$

	x_1	x_2	x_3	x_4	x_5	x_6	x_7	
x_4	1	6	1	1	0	0	0	10
x_5	−1	−6	−1	0	1	0	0	−10
x_6	2	3	1	0	0	1	0	15
x_7	−2	**−3***	−1	0	0	0	1	−15
$(c_j - z_j)$:	6	3	4	0	0	0	0	0

Tableau 1

Since all the $(c_j - z_j)$ values are nonnegative, the above solution is optimal. However, it is infeasible because x_5 and x_7 have nonpositive values. Since x_7 has the most nonpositive value, it becomes the departing variable (D.V.).

	x_1	x_2	x_3	x_4	x_5	x_6	x_7
$(c_j - z_j)$ row:	6	3	4	0	0	0	0
x_7 row:	−2	−3	−1	0	0	0	1
absolute ratios:	3	1	4	–	–	–	–

Since x_2 has the smallest ratio, it becomes the entering variable (E.V.). Thus the element −3, marked by the asterisk, becomes the pivot element. Using elementary row operations, we obtain Tableau 2.

	x_1	x_2	x_3	x_4	x_5	x_6	x_7	
x_4	**−3***	0	−1	1	0	0	2	−20
x_5	3	0	1	0	1	0	−2	20
x_6	0	0	0	0	0	1	1	0
x_2	2/3	1	1/3	0	0	0	−1/3	5
$(c_j - z_j)$:	4	0	3	0	0	0	1	−15

Tableau 2

	x_1	x_2	x_3	x_4	x_5	x_6	x_7
$(c_j - z_j)$ row:	4	0	3	0	0	0	1
x_4 row:	−3	0	−1	1	0	0	2
absolute ratios:	4/3	–	3	–	–	–	–

Since x_1 has the smallest absolute ratio, it becomes the entering variable (E.V.). Thus the element -3, marked by the asterisk, becomes the pivot element. Using elementary row operations, we obtain Tableau 3.

	x_1	x_2	x_3	x_4	x_5	x_6	x_7	
x_1	1	0	1/3	−1/3	0	0	−2/3	20/3
x_5	0	0	0	1	1	0	0	0
x_6	0	0	0	0	0	1	1	0
x_2	0	1	1/9	2/9	0	0	1/9	5/9
$(c_j - z_j)$:	0	0	5/3	4/3	0	0	11/3	−125/3

Tableau 3

Since all the variables have nonnegative values, the above optimal solution is feasible. The optimal and feasible solution is $x_1^* = 20/3$, $x_2^* = 5/9$, $x_3^* = 0$, with $z^* = 125/3$.

Supplementary Problems

Use the simplex or two-phase method to solve the following problems.

3.15

$$\begin{aligned} \text{maximize:}\quad & z = x_1 + x_2 \\ \text{subject to:}\quad & x_1 + 5x_2 \le 5 \\ & 2x_1 + x_2 \le 4 \\ \text{with:}\quad & x_1, x_2 \text{ nonnegative} \end{aligned}$$

3.16

$$\begin{aligned} \text{maximize:}\quad & z = 3x_1 + 4x_2 \\ \text{subject to:}\quad & 2x_1 + x_2 \le 6 \\ & 2x_1 + 3x_2 \le 9 \\ \text{with:}\quad & x_1, x_2 \text{ nonnegative} \end{aligned}$$

3.17

$$\begin{aligned} \text{minimize:}\quad & z = x_1 + 2x_2 \\ \text{subject to:}\quad & x_1 + 3x_2 \ge 11 \\ & 2x_1 + x_2 \ge 9 \\ \text{with:}\quad & x_1, x_2 \text{ nonnegative} \end{aligned}$$

3.18

$$\begin{aligned} \text{maximize:}\quad & z = -x_1 - x_2 \\ \text{subject to:}\quad & x_1 + 2x_2 \ge 5000 \\ & 5x_1 + 3x_2 \ge 12000 \\ \text{with:}\quad & x_1, x_2 \text{ nonnegative} \end{aligned}$$

3.19

$$\begin{aligned} \text{maximize:}\quad & z_i = 2x_1 + 3x_2 + 4x_3 \\ \text{subject to:}\quad & x_1 + x_2 + x_3 \le 1 \\ & x_1 + x_2 + 2x_3 = 2 \\ & 3x_1 + 2x_2 + x_3 \ge 4 \\ \text{with:}\quad & \text{all variables nonnegative} \end{aligned}$$

3.20

$$\begin{aligned}
\text{minimize:}\quad & z = 14x_1 + 13x_2 + 11x_3 + 13x_4 + 13x_5 + 12x_6 \\
\text{subject to:}\quad & x_1 + x_2 + x_3 = 1200 \\
& x_4 + x_5 + x_6 = 1000 \\
& x_1 + x_4 = 1000 \\
& x_2 + x_5 = 700 \\
& x_3 + x_6 = 500 \\
\text{with:}\quad & \text{all variables nonnegative}
\end{aligned}$$

3.21 Problem 2.23.

3.22 Problem 2.25.

3.23 Problem 2.24.

3.24 Problem 2.26.

3.25 Problem 2.28.

3.26 Problem 1.7, but with inventories of 80 000 bbl of domestic oil and 20 000 bbl of foreign oil.

3.27 Problem 1.17.

3.28 Problem 1.18.

3.29 Problem 1.19.

3.30 Problem 1.22.

Use the dual simplex method to solve the following problems.

3.31

$$\begin{aligned}
\text{minimize:}\quad & z = 3x_1 + x_2 \\
\text{subject to:}\quad & 3x_1 + x_2 \geq 4 \\
& x_1 - x_2 \geq 0 \\
\text{with:}\quad & x_1, x_2 \text{ nonnegative}
\end{aligned}$$

3.32

$$\begin{aligned}
\text{minimize:}\quad & z = 5x_1 + 3x_2 + x_3 \\
\text{subject to:}\quad & -x_1 + x_2 + x_3 \geq 2 \\
& 2x_1 + x_2 - x_3 \geq 4 \\
\text{with:}\quad & \text{all variables nonnegative}
\end{aligned}$$

3.33

$$\begin{aligned}
\text{minimize:}\quad & z = x_1 + 2x_2 + 3x_3 \\
\text{subject to:}\quad & x_1 - 2x_2 + x_3 \geq 1 \\
& 3x_1 - 4x_2 + 6x_3 \leq 8 \\
& 2x_1 - 4x_2 + 2x_3 \leq 2 \\
\text{with:}\quad & \text{all variables nonnegative}
\end{aligned}$$

3.34

$$\begin{aligned} \text{maximize:} \quad & z = -4x_1 - 3x_2 \\ \text{subject to:} \quad & x_1 + x_2 \geq 2 \\ & x_1 + 2x_2 \geq 8 \\ \text{with:} \quad & x_1, x_2 \text{ nonnegative} \end{aligned}$$

3.35

$$\begin{aligned} \text{maximize:} \quad & z = -3x_1 - 4x_2 - 5x_3 \\ \text{subject to:} \quad & x_1 + x_2 \leq 10 \\ & x_1 + 3x_2 + x_3 \geq 9 \\ & x_2 + x_3 \geq 4 \\ \text{with:} \quad & \text{all variables nonnegative} \end{aligned}$$

3.36

$$\begin{aligned} \text{minimize:} \quad & z = 3x_1 + 9x_2 \\ \text{subject to:} \quad & x_1 + 3x_2 \geq 6 \\ & 2x_1 + 3x_2 \geq 9 \\ \text{with:} \quad & x_1, x_2 \text{ nonnegative} \end{aligned}$$

3.37

$$\begin{aligned} \text{maximize:} \quad & z = 5x_1 + x_2 + 3x_3 + 2x_4 \\ \text{subject to:} \quad & 2x_1 + 3x_2 + 6x_3 + x_4 \geq 6 \\ & 6x_1 + 3x_2 + 5x_3 + 3x_4 \geq 8 \\ & 3x_1 + 6x_2 + x_3 + 3x_4 \geq 4 \\ \text{with:} \quad & \text{all variables nonnegative} \end{aligned}$$

3.38

$$\begin{aligned} \text{maximize:} \quad & z = -x_1 - x_2 - x_3 \\ \text{subject to:} \quad & x_1 + 3x_2 \leq 10 \\ & x_1 + x_2 + x_3 \geq 6 \\ & x_1 \geq 2 \\ \text{with:} \quad & \text{all variables nonnegative} \end{aligned}$$

3.39

$$\begin{aligned} \text{minimize:} \quad & z = -5x_1 - x_2 \\ \text{subject to:} \quad & 5x_1 + x_2 \geq 10 \\ & x_1 + 2x_2 \geq 6 \\ \text{with:} \quad & x_1, x_2 \text{ nonnegative} \end{aligned}$$

3.40

$$\begin{aligned} \text{minimize:} \quad & z = 8x_1 + 9x_2 \\ \text{subject to:} \quad & x_1 - 3x_2 \leq 2 \\ & x_1 + x_2 \geq 6 \\ \text{with:} \quad & x_1, x_2 \text{ nonnegative} \end{aligned}$$

3.41

$$\begin{aligned} \text{maximize:} \quad & z = 2x_1 + 4x_2 + x_3 \\ \text{subject to:} \quad & x_1 + x_2 + x_3 \geq 8 \\ & x_1 - x_2 - 5x_3 \geq 5 \\ & 5x_1 + 5x_2 + x_3 \geq 25 \\ \text{with:} \quad & \text{all variables nonnegative} \end{aligned}$$

3.42

$$\begin{aligned} \text{maximize:} \quad & z = 8x_1 + 5x_2 + 6x_3 \\ \text{subject to:} \quad & 2x_1 + x_2 + 2x_3 \geq 60 \\ & x_1 + x_2 - x_3 \geq 15 \\ \text{with:} \quad & \text{all variables nonnegative} \end{aligned}$$

Chapter 4

Linear Programming: Duality and Sensitivity Analysis

Every linear program in the variables $x_1, x_2, \ldots, x_n$ has associated with it another linear program in the variables $w_1, w_2, \ldots, w_m$ (where m is the number of constraints in the original program), known as its *dual*. The original program, called the *primal*, completely determines the form of its dual.

SYMMETRIC DUALS

The dual of a (primal) linear program in the (nonstandard) matrix form

$$\begin{aligned} \text{minimize:} \quad & z = \mathbf{C}^T\mathbf{X} \\ \text{subject to:} \quad & \mathbf{AX} \geq \mathbf{B} \\ \text{with:} \quad & \mathbf{X} \geq \mathbf{0} \end{aligned} \tag{4.1}$$

is the linear program

$$\begin{aligned} \text{maximize:} \quad & z = \mathbf{B}^T\mathbf{W} \\ \text{subject to:} \quad & \mathbf{A}^T\mathbf{W} \leq \mathbf{C} \\ \text{with:} \quad & \mathbf{W} \geq \mathbf{0} \end{aligned} \tag{4.2}$$

Conversely, the dual of program (*4.2*) is program (*4.1*). (See Problems 4.1 and 4.2.)

Programs (*4.1*) and (*4.2*) are symmetrical in that both involve nonnegative variables and inequality constraints; they are known as the *symmetric duals* of each other. The dual variables $w_1, w_2, \ldots, w_m$ are sometimes called *shadow costs*.

DUAL SOLUTIONS

Theorem 4.1 (Duality Theorem): If an optimal solution exists to either the primal or symmetric dual program, then the other program also has an optimal solution and the two objective functions have the same optimal value.

In such situations, the optimal solution to the primal (dual) is found in the last row of the final simplex tableau for the dual (primal), in those columns associated with the slack or surplus variables (see Problem 4.3). Since the solutions to both programs are obtained by solving either one, it may be computationally advantageous to solve a program's dual rather than the program itself. (See Problem 4.4.)

Theorem 4.2 (Complementary Slackness Principle): Given that the pair of symmetric duals have optimal solutions, then if the kth constraint of one system holds as an inequality—i.e., the associated slack or surplus variable is positive—the kth component of the optimal solution of its symmetric dual is zero.

(See Problems 4.11 and 4.12.)

Copyrighted Material

UNSYMMETRIC DUALS

For primal programs in standard matrix form, duals may be defined as follows:

Primal			***Dual***		
minimize:	$z = \mathbf{C}^T\mathbf{X}$		maximize:	$z = \mathbf{B}^T\mathbf{W}$	
subject to:	$\mathbf{AX} = \mathbf{B}$	(4.3)	subject to:	$\mathbf{A}^T\mathbf{W} \le \mathbf{C}$	(4.4)
with:	$\mathbf{X} \ge \mathbf{0}$				
maximize:	$z = \mathbf{C}^T\mathbf{X}$		minimize:	$z = \mathbf{B}^T\mathbf{W}$	
subject to:	$\mathbf{AX} = \mathbf{B}$	(4.5)	subject to:	$\mathbf{A}^T\mathbf{W} \ge \mathbf{C}$	(4.6)
with:	$\mathbf{X} \ge \mathbf{0}$				

(See Problems 4.5 and 4.6.) Conversely, the duals of programs (*4.4*) and (*4.6*) are defined as programs (*4.3*) and (*4.5*), respectively. Since the dual of a program in standard form is not itself in standard form, these duals are *unsymmetric*. Their forms are consistent with and a direct consequence of the definition of symmetric duals (see Problem 4.8).

Theorem 4.1 is valid for unsymmetric duals too. However, the solution to an unsymmetric dual is not, in general, immediately apparent from the solution to the primal; the relationships are

$$\mathbf{W}^{*T} = \mathbf{C}_0^T\mathbf{A}_0^{-1} \qquad \text{or} \qquad \mathbf{W}^* = (\mathbf{A}_0^T)^{-1}\mathbf{C}_0 \tag{4.7}$$

$$\mathbf{X}^{*T} = \mathbf{B}_0^T(\mathbf{A}_0^T)^{-1} \qquad \text{or} \qquad \mathbf{X}^* = \mathbf{A}_0^{-1}\mathbf{B}_0 \tag{4.8}$$

In (*4.7*), $\mathbf{C}_0$ and $\mathbf{A}_0$ are made up of those elements of $\mathbf{C}$ and $\mathbf{A}$, in either program (*4.3*) or (*4.5*), that correspond to the *basic variables* in $\mathbf{X}^*$; in (*4.8*), $\mathbf{B}_0$ and $\mathbf{A}_0$ are made up of those elements of $\mathbf{B}$ and $\mathbf{A}$, in either program (*4.4*) or (*4.6*), that correspond to the *basic variables* in $\mathbf{W}^*$. (See Problem 4.7.)

SENSITIVITY ANALYSIS

The scope of linear programming does not end at finding the optimal solution to the linear model of a real-life problem. Sensitivity analysis of linear programming continues with the optimal solution to provide additional practical insight of the model. Since this analysis examines how sensitive the optimal solution is to changes in the coefficients of the LP model, it is called sensitivity analysis. This process is also known as postoptimality analysis because it starts after the optimal solution is found. Since we live in a dynamic world where changes occur constantly, this study of the effects on the solution due to changes in the data of a problem is very useful.

In general, we are interested in finding the effects of the following changes on the optimal LP solution:

(i) Changes in profit/unit or cost/unit (coefficients) of the objective function.

(ii) Changes in the availability of resources or capacities of production/service centers or limits on demands (requirements vector or RHS of constraints).

(iii) Changes in resource requirements/units of products or activities (technological coefficients of variables) in constraints.

(iv) Addition of a new product or activity (variable).

(v) Addition of a new constraint.

The sensitivity analysis will be discussed for linear programs of the form:

$$\begin{aligned} \text{maximize:} \quad & z = \mathbf{C}^T\mathbf{X} \\ \text{subject to:} \quad & \mathbf{AX} \le \mathbf{B} \\ \text{with:} \quad & \mathbf{X} \ge \mathbf{0} \end{aligned}$$

where $\mathbf{X}$ is the column vector of unknowns; $\mathbf{C}^T$ is the row vector of the corresponding costs (cost vector);

A is the coefficient matrix of the constraints (matrix of technological coefficients); and **B** is the column vector of the right-hand sides of the constraints (requirements vector).

To fix our ideas, the sensitivity analysis concepts will be exemplified through the following numerical problem:

$$\begin{aligned} \text{maximize:} \quad & z = 20x_1 + 10x_2 \\ \text{subject to:} \quad & x_1 + 2x_2 \le 40 \\ & 3x_1 + 2x_2 \le 60 \\ \text{with:} \quad & x_1 \text{ and } x_2 \text{ nonnegative} \end{aligned}$$

This program is put into the following standard form by introducing the slack variables x_3 and x_4:

$$\begin{aligned} \text{maximize:} \quad & z = 20x_1 + 10x_2 + 0x_3 + 0x_4 \\ \text{subject to:} \quad & x_1 + 2x_2 + x_3 \qquad = 40 \\ & 3x_1 + 2x_2 \qquad + x_4 = 60 \\ \text{with:} \quad & \text{all variables nonnegative} \end{aligned}$$

The solution for this problem is summarized as follows:

Initial Simplex Tableau:

		x_1	x_2	x_3	x_4	
		20	10	0	0	
x_3	0	1	2	1	0	40
x_4	0	3	2	0	1	60
$(z_j - c_j)$:		−20	−10	0	0	0

Final Simplex Tableau:

		x_1	x_2	x_3	x_4	
		20	10	0	0	
x_3	0	0	4/3	1	−1/3	20
x_1	20	1	2/3	0	1/3	20
$(z_j - c_j)$:		0	10/3	0	20/3	400

Since the last row of the above tableau contains no negative elements, the optional solution is $x_1^* = 20$, $x_2^* = 0$, with $z^* = 400$.

For clarity of exposition, the five types of modifications are illustrated case by case below:

Example 4.1 Modification of the cost vector $\mathbf{C}^T$

(*a*) Coefficients of the nonbasic variables.

Let the new value of the cost coefficient corresponding to the nonbasic variable x_2 be 15 instead of 10. The corresponding simplex tableau is

		x_1	x_2	x_3	x_4	
		20	15	0	0	
x_3	0	0	4/3*	1	−1/3	20
x_1	20	1	2/3	0	1/3	20
$(z_j - c_j)$:		0	−5/3	0	20/3	400

Since $(z_2 - c_2) < 0$, the new solution is not optimal. The regular simplex method is used to reoptimize the problem, starting with x_2 as the entering variable.

The new optimal tableau is

		x_1	x_2	x_3	x_4	
		20	15	0	0	
x_2	15	0	1	3/4	−1/4	15
x_1	20	1	0	−1/2	1/2	10
$(z_j - c_j)$:		0	0	5/4	25/4	425

The optimal solution is $x_1^* = 10$, $x_2^* = 15$, with $z^* = 425$.

(*b*) Coefficients of the basic variables.

Let the cost coefficient of the basic variable x_1 be changed from 20 to 10. Then the simplex tableau becomes

		x_1	x_2	x_3	x_4	
		10	10	0	0	
x_3	0	0	4/3*	1	−1/3	20
x_1	10	1	2/3	0	1/3	20
$(z_j - c_j)$:		0	−10/3	0	10/3	200

Since $(z_2 - c_2) < 0$, the new solution is not optimal. The regular simplex method is resorted to for reoptimization, first by entering x_2.

The new optimal tableau is

		x_1	x_2	x_3	x_4	
		10	10	0	0	
x_2	10	0	1	3/4	−1/4	15
x_1	10	1	0	−1/2	1/2	10
$(z_j - c_j)$:		0	0	5/2	5/2	250

The optimal solution is $x_1^* = 10$, $x_2^* = 15$, with $z^* = 250$.

Example 4.2 Modification of the requirements vector **B**

Let the RHS of the second constraint be changed from 60 to 130.
Then $\mathbf{X}_S = \mathbf{S}^{-1}\mathbf{B}$ becomes

$$\begin{pmatrix} x_3 \\ x_1 \end{pmatrix} = \begin{pmatrix} 1 & -1/3 \\ 0 & 1/3 \end{pmatrix}\begin{pmatrix} 40 \\ 130 \end{pmatrix} = \begin{pmatrix} -3 & 1/3 \\ 43 & 1/3 \end{pmatrix}$$

Since $x_3 < 0$, the new solution is not feasible. The dual simplex method used to clear the infeasibility starting with the following tableau:

		x_1	x_2	x_3	x_4	
		20	10	0	0	
x_3	0	0	1.33*	1	−0.33	−3.33
x_1	20	1	0.67	0	0.33	43.33
$(z_j - c_j)$:		0	3.33	0	6.67	866.67

The new final tableau is

		x_1	x_2	x_3	x_4	
		20	10	0	0	
x_4	0	0	−4	−3	1	10
x_1	20	1	2	1	0	40
$(z_j - c_j)$:		0	30	20	0	800

The optimal and feasible solution is $x_1^* = 40$, $x_2^* = 0$, with $z^* = 800$.

Example 4.3 Modification of the matrix of coefficients **A**

The problem becomes more complicated, when the technological coefficients of the basic variables are considered. This is because here the matrix under the starting solution changes. In this case, it may be easier to solve the new problem than resort to the sensitivity analysis approach. Therefore our analysis is limited to the case of the coefficients of nonbasic variables only.

Let the technological coefficients of x_2 be changed from $(2, 2)^T$ to $(2, 1)^T$.

Then the new technological coefficients of x_2 in the optimal simplex tableau of the original primal problem are given by

$$\mathbf{S}^{-1}\mathbf{P}_2 = \begin{pmatrix} 1 & -1/3 \\ 0 & 1/3 \end{pmatrix}\begin{pmatrix} 2 \\ 1 \end{pmatrix} = \begin{pmatrix} 5/3 \\ 1/3 \end{pmatrix}$$

Hence the new simplex tableau becomes

		x_1	x_2	x_3	x_4	
		20	10	0	0	20
x_3	0	0	5/3*	1	−1/3	20
x_1	20	1	1/3	0	1/3	20
$(z_j - c_j)$:		0	−10/3	0	20/3	400

Since here $(z_2 - c_2) < 0$, the new solution is not optimal. Again the regular simplex method is resorted to for reoptimization, first by entering x_2.

The new optimal tableau is

		x_1	x_2	x_3	x_4	
		20	10	0	0	
x_2	10	0	1	3/5	−1/5	12
x_1	20	1	0	−1/5	2/5	16
$(z_j - c_j)$:		0	0	2	6	440

The optimal solution is $x_1^* = 16$, $x_2^* = 12$, with $z^* = 440$.

Example 4.4 Addition of a variable

Let a new variable x_k be added to the original problem. This is accompanied by the addition to $\mathbf{A}$ of a column $\mathbf{P}_k = (3, 1)^T$ and to $\mathbf{C}^T$ of a component $c_k = 30$. Thus the new problem becomes

$$\begin{aligned} \text{maximize:} \quad & z = 20x_1 + 10x_2 + 30x_k \\ \text{subject to:} \quad & x_1 + 2x_2 + 3x_k \le 40 \\ & 3x_1 + 2x_2 + x_k \le 60 \\ \text{with:} \quad & \text{all variables nonnegative} \end{aligned}$$

Then the technological coefficients of x_k in the optimal tableau are

$$\mathbf{S}^{-1}\mathbf{P}_k = \begin{pmatrix} 1 & -1/3 \\ 0 & 1/3 \end{pmatrix}\begin{pmatrix} 3 \\ 1 \end{pmatrix} = \begin{pmatrix} 8/3 \\ 1/3 \end{pmatrix}$$

The corresponding $(z_k - c_k) = (8/3)(0) + (1/3)(20) - 30 = 70/3$.

Thus the modified simplex tableau is

		x_1	x_2	x_k	x_3	x_4	
		20	10	30	0	0	
x_3	0	0	4/3	8/3*	1	−1/3	20
x_1	20	1	2/3	1/3	0	1/3	20
$(z_j - c_j)$:		0	10/3	−70/3	0	20/3	400

Now entering the variable x_k, the regular simplex method is applied to obtain the following optimal tableau.

		x_1	x_2	x_k	x_3	x_4	
		20	10	30	0	0	
x_k	30	0	1/2	1	3/8	−1/8	15/2
x_1	20	1	1/2	0	−1/8	3/8	35/2
$(z_j - c_j)$:		0	15	0	70/8	30/8	575

The optimal solution is $x_1^* = 17.5$, $x_2^* = 0$, $x_k^* = 7.5$, with $z^* = 575$.

Example 4.5 Addition of a constraint

If a new constraint added to the system is not active, it is called a secondary or redundant constraint, and the optimality of the problem remains unchanged. On the other hand, if the new constraint is active, the current optimal solution becomes infeasible.

Let us consider the case of the addition of an active constraint, viz., $2x_1 + 3x_2 \geq 50$ to the original problem. The current optimal solution ($x_1^* = 20, x_2^* = 0$) does not satisfy the above new constraint and hence becomes infeasible. Therefore, add the new constraint to the current optimal tableau. The new slack variable is x_5. The new simplex tableau is

		x_1	x_2	x_3	x_4	x_5	
		20	10	0	0	0	
x_3	0	0	4/3	1	−1/3	0	20
x_1	20	1	2/3	0	1/3	0	20
x_5	0	−2	−3	0	0	1	−50
$(z_j - c_j)$:		0	10/3	0	20/3	0	400

By using the row operations, the coefficient of x_1 in the new constraint is made zero. The modified tableau becomes

		x_1	x_2	x_3	x_4	x_5	
		20	10	0	0	0	
x_3	0	0	4/3	1	−1/3	0	20
x_1	20	1	2/3	0	1/3	0	20
x_5	0	0	−5/3*	0	2/3	1	−10
$(z_j - c_j)$:		0	10/3	0	20/3	0	400

The dual simplex method is used to overcome the infeasibility by departing the variable x_5. The new tableau is

		x_1	x_2	x_3	x_4	x_5	
		20	10	0	0	0	
x_3	0	0	0	1	1/5	4/5	12
x_1	20	1	0	0	3/5	2/5	16
x_2	10	0	1	0	−2/5	−3/5	6
$(z_j - c_j)$:		0	0	0	8	2	380

The above tableau gives the optimal and feasible solution as $x_1^* = 16$, $x_2^* = 6$, $x_3^* = 12$, with $z^* = 380$.

Solved Problems

4.1 Determine the symmetric dual of the program

$$\begin{aligned} \text{minimize:}\quad & z = 5x_1 + 2x_2 + x_3 \\ \text{subject to:}\quad & 2x_1 + 3x_2 + x_3 \geq 20 \\ & 6x_1 + 8x_2 + 5x_3 \geq 30 \\ & 7x_1 + x_2 + 3x_3 \geq 40 \\ & x_1 + 2x_2 + 4x_3 \geq 50 \\ \text{with:}\quad & \text{all variables nonnegative} \end{aligned} \tag{1}$$

This program has the form of (*4.1*). Its dual, of the form (*4.2*), is found by taking the opposite optimum, interchanging **B** and **C**, transposing **A**, and reversing the constraint inequalities:

$$\begin{aligned} \text{maximize:}\quad & z = 20w_1 + 30w_2 + 40w_3 + 50w_4 \\ \text{subject to:}\quad & 2w_1 + 6w_2 + 7w_3 + w_4 \leq 5 \\ & 3w_1 + 8w_2 + w_3 + 2w_4 \leq 2 \\ & w_1 + 5w_2 + 3w_3 + 4w_3 \leq 1 \\ \text{with:}\quad & \text{all variables nonnegative} \end{aligned} \tag{2}$$

Note that the primal, program (*1*), contains three variables and four constraints, while its dual, program (*2*), contains four variables and three constraints.

4.2 Determine the symmetric dual of the program

$$\begin{aligned} \text{maximize:}\quad & z = 2x_1 + x_2 \\ \text{subject to:}\quad & x_1 + 5x_2 \leq 10 \\ & x_1 + 3x_2 \leq 6 \\ & 2x_1 + 2x_2 \leq 8 \\ \text{with:}\quad & \text{all variables nonnegative} \end{aligned} \tag{1}$$

This program has the form (*4.2*), with x-variables replacing w-variables. Proceeding as in Problem 4.1, we generate its dual, (*4.1*), with w-variables replacing x-variables:

$$\begin{aligned} \text{minimize:}\quad & z = 10w_1 + 6w_2 + 8w_3 \\ \text{subject to:}\quad & w_1 + w_2 + 2w_3 \geq 2 \\ & 5w_1 + 3w_2 + 2w_3 \geq 1 \\ \text{with:}\quad & \text{all variables nonnegative} \end{aligned} \tag{2}$$

4.3 Show that both the primal and dual programs in Problem 4.2 have the same optimal value for z, and that the solution of each is imbedded in the final simplex tableau of the other.

Introducing slack variables x_3, x_4, and x_5, respectively, in the constraint inequalities of program (*1*) of Problem 4.2, and then applying the simplex method to the resulting program, we generate sequentially Tableaux 1 and 2.

		x_1	x_2	x_3	x_4	x_5	
		2	1	0	0	0	
x_3	0	1	5	1	0	0	10
x_4	0	1	3	0	1	0	6
x_5	0	2*	2	0	0	1	8
$(z_j - c_j)$:		−2	−1	0	0	0	0

Tableau 1

	x_1	x_2	x_3	x_4	x_5	
			slack variables			
x_3	0	4	1	0	−1/2	6
x_4	0	2	0	1	−1/2	2
x_1	1	1	0	0	1/2	4
	0	1	0	0	1	8
			solution to the dual			

Tableau 2

The solution to the primal is obtained from Tableau 2 as $x_1^* = 4$, $x_2^* = 0$, with $z^* = 8$. The solution to the dual program is found in the last row of this tableau, in those columns associated with the slack variables for the primal. Here, $w_1^* = 0$, $w_2^* = 0$, and $w_3^* = 1$.

We can solve the dual directly by introducing surplus variables w_4 and w_5, and artificial variables w_6 and w_7, to program (2) of Problem 4.2, and then applying the two-phase method, which generates Tableaux 1', ..., 4'.

		w_1	w_2	w_3	w_4	w_5	w_6	w_7	
		10	6	8	0	0	M	M	
w_6	M	1	1	2	−1	0	1	0	2
w_7	M	5*	3	2	0	−1	0	1	1
$(c_j - z_j)$:		10	6	8	0	0	0	0	0
		−6	−4	−4	1	1	0	0	−3

Tableau 1'

	w_1	w_2	w_3	w_4	w_5	
				surplus variables		
w_5	−4	−5	0	−1	1	1
w_3	1/2	1/2	1	−1/2	0	1
	6	2	0	4	0	−8
				solution to the primal		

Tableau 4'

The solution to the dual is read from Tableau 4' as $w_1^* = w_2^* = 0$, $w_3^* = 1$, with $z^* = -(-8) = 8$. The solution to the primal is found in the last row of this tableau, in those columns associated with the surplus variables. It is the same solution as found previously.

4.4

$$\begin{aligned}
\text{minimize:}\quad & z = x_1 + x_2 + x_3 + x_4 + x_5 + x_6 \\
\text{subject to:}\quad & x_1 + x_6 \geq 7 \\
& x_1 + x_2 \geq 20 \\
& x_2 + x_3 \geq 14 \\
& x_3 + x_4 \geq 20 \\
& x_4 + x_5 \geq 10 \\
& x_5 + x_6 \geq 5 \\
\text{with:}\quad & \text{all variables nonnegative}
\end{aligned}$$

To solve this program directly would require the introduction of 12 new variables, six surplus and six artificial, and the application of the two-phase method. A simpler approach is to consider the dual program:

$$\begin{aligned}
\text{maximize:}\quad & z = 7w_1 + 20w_2 + 14w_3 + 20w_4 + 10w_5 + 5w_6 \\
\text{subject to:}\quad & w_1 + w_2 \leq 1 \\
& w_2 + w_3 \leq 1 \\
& w_3 + w_4 \leq 1 \\
& w_4 + w_5 \leq 1 \\
& w_5 + w_6 \leq 1 \\
& w_1 + w_6 \geq 1 \\
\text{with:}\quad & \text{all variables nonnegative}
\end{aligned}$$

		w_1	w_2	w_3	w_4	w_5	w_6	w_7	w_8	w_9	w_{10}	w_{11}	w_{12}	
		7	20	14	20	10	5	0	0	0	0	0	0	
w_7	0	1	1	0	0	0	0	1	0	0	0	0	0	1
w_8	0	0	1*	1	0	0	0	0	1	0	0	0	0	1
w_9	0	0	0	1	1	0	0	0	0	1	0	0	0	1
w_{10}	0	0	0	0	1	1	0	0	0	0	1	0	0	1
w_{11}	0	0	0	0	0	1	1	0	0	0	0	1	0	1
w_{12}	0	1	0	0	0	0	1	0	0	0	0	0	1	1
$(z_j - c_j)$:		−7	−20	−14	−20	−10	−5	0	0	0	0	0	0	0

Tableau 1

	w_1	w_2	w_3	w_4	w_5	w_6	w_7	w_8	w_9	w_{10}	w_{11}	w_{12}	
							slack variables						
w_1	1	0	−1	0	0	0	1	−1	0	0	0	0	0
w_2	0	1	1	0	0	0	0	1	0	0	0	0	1
w_9	0	0	1	0	−1	0	0	0	1	−1	0	0	0
w_4	0	0	0	1	1	0	0	0	0	1	0	0	1
w_{11}	0	0	−1	0	1	0	1	−1	0	0	1	−1	0
w_6	0	0	1	0	0	1	−1	1	0	0	0	1	1
	0	0	4	0	10	0	2	18	0	20	0	5	45
							solution to the primal						

Tableau 5

This system is put in standard form by introducing only six new variables, all slack. Doing so and then applying the simplex method, we successively generate Tableaux 1, . . . , 5. Tableau 5 signals optimality for the dual program, so the optimal solution to the primal is found in the last row of this tableau, in those columns associated with the slack variables. Specifically, $x_1^* = 2$, $x_2^* = 18$, $x_3^* = 0$, $x_4^* = 20$, $x_5^* = 0$, $x_6^* = 5$, with $z^* = 45$.

4.5 Determine the dual of the program

$$\begin{aligned} \text{maximize:} \quad & z = x_1 + 3x_2 - 2x_3 \\ \text{subject to:} \quad & 4x_1 + 8x_2 + 6x_3 = 25 \\ & 7x_1 + 5x_2 + 9x_3 = 30 \\ \text{with:} \quad & \text{all variables nonnegative} \end{aligned}$$

This program has the form (*4.5*); its unsymmetric dual is given by (*4.6*) as

$$\begin{aligned} \text{minimize:} \quad & z = 25w_1 + 30w_2 \\ \text{subject to:} \quad & 4w_1 + 7w_2 \geq 1 \\ & 8w_1 + 5w_2 \geq 3 \\ & 6w_1 + 9w_2 \geq -2 \end{aligned}$$

4.6 Determine the dual of the program

$$\begin{aligned} \text{minimize:} \quad & z = 3x_1 + x_2 + 0x_3 + 0x_4 + Mx_5 + Mx_6 \\ \text{subject to:} \quad & x_1 + x_2 - x_3 + x_5 = 7 \\ & 2x_1 + 3x_2 - x_4 + x_6 = 8 \\ \text{with:} \quad & \text{all variables nonnegative} \end{aligned}$$

As this program has the form (*4.3*), its unsymmetric dual is given by (*4.4*) as

$$\begin{aligned} \text{maximize:} \quad & z = 7w_1 + 8w_2 \\ \text{subject to:} \quad & w_1 + 2w_2 \le 3 \\ & w_1 + 3w_2 \le 1 \\ & -w_1 \qquad \le 0 \\ & \qquad - w_2 \le 0 \\ & w_1 \qquad \le M \\ & \qquad w_2 \le M \end{aligned}$$

Because the third and fourth constraints are equivalent to $w_1 \ge 0$ and $w_2 \ge 0$, and because the fifth and sixth contraints simply require the variables to be finite (a condition that is always presupposed), the dual program can be simplified to

$$\begin{aligned} \text{maximize:} \quad & z = 7w_1 + 8w_2 \\ \text{subject to:} \quad & w_1 + 2w_2 \le 3 \\ & w_1 + 3w_2 \le 1 \\ \text{with:} \quad & w_1 \text{ and } w_2 \text{ nonnegative} \end{aligned}$$

4.7 Verify (*4.7*) and (*4.8*) for the programs of Problem 4.5.

The primal program can be solved by the two-phase method if artificial variables x_4 and x_5, respectively, are first added to the left-hand sides of the constraint equations. Tableaux 1, . . . , 4 result.

		x_1	x_2	x_3	x_4	x_5	
		1	3	−2	$-M$	$-M$	
x_4	$-M$	4	8	6	1	0	25
x_5	$-M$	7	5	9*	0	1	30
$(z_j - c_j)$:		−1	−3	2	0	0	0
		−11	−13	−15	0	0	−55

Tableau 1

	x_1	x_2	x_3	
x_2	0	1	0.1668	1.528
x_1	1	0	1.167	3.193
	0	0	3.668	7.777

Tableau 4

The dual program was put into standard form in Problem 2.6 (with x's replacing w's). Applying the two-phase method to that program, we generate Tableaux 1′, . . . , 3′. It follows from Tableau 4 that $x_1^* = 3.193$, $x_2^* = 1.528$, $x_3^* = 0$, with $z^* = 7.777$. It follows from Tableau 3′ that

$$w_1^* = w_3^* - w_4^* = 0.4444 \qquad w_2^* = w_5^* - w_6^* = -0.1111$$

with $z^* = -(-7.778) = 7.778$. Note that the values of the objective for both the primal and the dual are

identical except for roundoff error.

		w_3	w_4	w_5	w_6	w_7	w_8	w_9	w_{10}	w_{11}	
		25	−25	30	−30	0	0	0	M	M	
w_{10}	M	4*	−4	7	−7	−1	0	0	1	0	1
w_{11}	M	8	−8	5	−5	0	−1	0	0	1	3
w_9	0	−6	6	−9	9	0	0	1	0	0	2
$(c_j - z_j)$:		25	−25	30	−30	0	0	0	0	0	0
		−12	12	−12	12	1	1	0	0	0	−4

Tableau 1′

	w_3	w_4	w_5	w_6	w_7	w_8	w_9	
w_3	1	1	0	0	0.1389	−0.1944	0	0.4444
w_6	0	0	−1	1	0.2222	−0.1111	0	0.1111
w_9	0	0	0	0	−1.167	−0.1667	1	3.667
	0	0	0	0	3.195	1.528	0	−7.778

Tableau 3′

To verify (*4.7*), we note that the basic variables in $\mathbf{X}^*$ are x_1 and x_2; hence (*4.7*) becomes

$$\mathbf{W}^{*T} = [1, 3]\begin{bmatrix} 4 & 8 \\ 7 & 5 \end{bmatrix}^{-1} = [1, 3]\begin{bmatrix} -5/36 & 8/36 \\ 7/36 & -4/36 \end{bmatrix} = [16/36, -4/36] = [0.4444, -0.1111]$$

To verify (*4.8*), we note that the basic variables in $\mathbf{W}^*$, as given in Tableau 3′, are w_3, w_6, and w_9; hence (*4.8*) becomes

$$\mathbf{X}^{*T} = [25, -30, 0]\begin{bmatrix} 4 & -7 & 0 \\ 8 & -5 & 0 \\ -6 & 9 & 1 \end{bmatrix}^{-1} = [25, -30, 0]\begin{bmatrix} -5/36 & 7/36 & 0 \\ -8/36 & 4/36 & 0 \\ 42/36 & 6/36 & 1 \end{bmatrix}$$
$$= [115/36, 55/36, 0] = [3.194, 1.528, 0]$$

4.8 Show that the form of the unsymmetric dual is uniquely determined by the form of the symmetric dual.

Consider program (*4.3*), with an $m \times n$ matrix $\mathbf{A}$. Since the equality constraint $\mathbf{AX} = \mathbf{B}$ is equivalent to the two inequality constraints $\mathbf{AX} \geq \mathbf{B}$ and $\mathbf{AX} \leq B$, and since this second inequality can be rewritten as $-\mathbf{AX} \geq -\mathbf{B}$, program (*4.3*) is equivalent to

$$\begin{aligned} \text{minimize:}\quad & z = \mathbf{C}^T\mathbf{X} \\ \text{subject to:}\quad & \hat{\mathbf{A}}\mathbf{X} \geq \hat{\mathbf{B}} \\ \text{with:}\quad & \mathbf{X} \geq \mathbf{0} \end{aligned} \tag{1}$$

where
$$\hat{\mathbf{A}} \equiv \begin{bmatrix} \mathbf{A} \\ -\mathbf{A} \end{bmatrix} \qquad \hat{\mathbf{B}} \equiv \begin{bmatrix} \mathbf{B} \\ -\mathbf{B} \end{bmatrix}$$

Program (*1*) has the form (*4.1*); its symmetric dual is given by (*4.2*) (with $\mathbf{U}$ written instead of $\mathbf{W}$) as

$$\begin{aligned} \text{maximize:}\quad & z = \hat{\mathbf{B}}^T\mathbf{U} \\ \text{subject to:}\quad & \hat{\mathbf{A}}^T\mathbf{U} \leq \mathbf{C} \\ \text{with:}\quad & \mathbf{U} \geq \mathbf{0} \end{aligned} \tag{2}$$

Partitioning $\mathbf{U}$ into two m-dimensional vectors, $\mathbf{U}_1$ and $\mathbf{U}_2$, and using the definitions of $\hat{\mathbf{A}}$ and $\hat{\mathbf{B}}$, we may rewrite (2) as

$$\begin{aligned} &\text{maximize:} \quad z = [\mathbf{B}^T, -\mathbf{B}^T]\begin{bmatrix}\mathbf{U}_1\\ \mathbf{U}_2\end{bmatrix} = \mathbf{B}^T(\mathbf{U}_1 - \mathbf{U}_2) \\ &\text{subject to:} \quad [\mathbf{A}^T, -\mathbf{A}^T]\begin{bmatrix}\mathbf{U}_1\\ \mathbf{U}_2\end{bmatrix} = \mathbf{A}^T(\mathbf{U}_1 - \mathbf{U}_2) \le \mathbf{C} \\ &\text{with:} \quad \mathbf{U}_1 \ge \mathbf{0} \quad \textbf{and} \quad \mathbf{U}_2 \ge \mathbf{0} \end{aligned} \tag{3}$$

Finally, defining $\mathbf{W} \equiv \mathbf{U}_1 - \mathbf{U}_2$, and noting that the difference of two nonnegative vectors is not itself restricted in sign, we put (3), which is the dual of program (4.3), into the form

$$\begin{aligned} &\text{maximize:} \quad z = \mathbf{B}^T\mathbf{W} \\ &\text{subject to:} \quad \mathbf{A}^T\mathbf{W} \le \mathbf{C} \end{aligned} \tag{4}$$

This last system is precisely program (4.4).

Repeating all the above steps with the words "maximize" and "minimize" interchanged and with the inequalities reversed in the main constraints, we may also shows that the dual of program (4.5) is program (4.6).

4.9 Prove that if $\mathbf{X}$ is *any* feasible solution to program (4.1) and if $\mathbf{W}$ is *any* feasible solution to program (4.2), then $\mathbf{C}^T\mathbf{X} \ge \mathbf{B}^T\mathbf{W}$.

If $\mathbf{X}$ is a feasible solution to (4.1), then $\mathbf{AX} \ge \mathbf{B}$. Premultiplying this inequality by the nonnegative vector $\mathbf{W}^T$, we obtain $\mathbf{W}^T\mathbf{AX} \ge \mathbf{W}^T\mathbf{B}$, which is equivalent to

$$\mathbf{W}^T\mathbf{AX} \ge \mathbf{B}^T\mathbf{W} \tag{1}$$

since $\mathbf{W}^T\mathbf{B}$ is a scalar.

If $\mathbf{W}$ is a feasible solution of (4.2), then $\mathbf{A}^T\mathbf{W} \le \mathbf{C}$, or $\mathbf{W}^T\mathbf{A} \le \mathbf{C}^T$. Postmultiplying by the nonnegative vector $\mathbf{X}$, we obtain

$$\mathbf{W}^T\mathbf{AX} \le C^T\mathbf{X} \tag{2}$$

Together, (1) and (2) imply $\mathbf{C}^T\mathbf{X} \ge \mathbf{B}^T\mathbf{W}$.

4.10 Given that $\mathbf{A}$ in program (4.1) is $m \times n$, let $x_{n+1}, x_{n+2}, \ldots, x_{n+m}$ be surplus variables introduced in the program to render the constraints equalities; and let $w_{m+1}, w_{m+2}, \ldots, w_{m+n}$ be slack variables introduced in program (4.2) for the same reason. Let z_1 and z_2 be the values of the objective functions of programs (4.1) and (4.2), respectively. Show that

$$\sum_{j=1}^{n} x_j w_{m+j} + \sum_{i=1}^{m} w_i x_{n+i} = z_1 - z_2 \tag{1}$$

Program (4.1) takes the form

$$\begin{aligned} &\text{minimize:} \quad z_1 = c_1x_1 + \cdots + c_nx_n + 0x_{n+1} + 0x_{n+2} + \cdots + 0x_{n+m} \\ &\text{subject to:} \quad a_{11}x_1 + a_{12}x_2 + \cdots + a_{1n}x_n - x_{n+1} = b_1 \\ &\qquad a_{21}x_1 + a_{22}x_2 + \cdots + a_{2n}x_n - x_{n+2} = b_2 \\ &\qquad \cdots\cdots\cdots\cdots\cdots\cdots\cdots\cdots \\ &\qquad a_{m1}x_1 + a_{m2}x_2 + \cdots + a_{mn}x_n - x_{n+m} = b_m \\ &\text{with:} \quad \text{all variables nonnegative} \end{aligned}$$

Multiplying the ith constraint equation of this program by w_i ($i = 1, 2, \ldots, m$) and summing the results, we obtain

$$\sum_{i=1}^{m}\sum_{j=1}^{n} a_{ij}x_jw_i - \sum_{i=1}^{m} x_{n+i}w_i = \sum_{i=1}^{m} b_iw_i$$

Subtracting this equation from

$$\sum_{j=1}^{n} c_j x_j = z_1$$

we get

$$\sum_{j=1}^{n} c_j x_j - \sum_{i=1}^{m} \sum_{j=1}^{n} a_{ij} x_j w_i + \sum_{i=1}^{m} x_{n+i} w_i = z_1 - \sum_{i=1}^{m} b_i w_i$$

which can be rewritten as

$$\sum_{j=1}^{n} \left(c_j - \sum_{i=1}^{m} a_{ij} w_i \right) x_j + \sum_{i=1}^{m} x_{n+i} w_i = z_1 - \sum_{i=1}^{m} b_i w_i \tag{2}$$

Program (*4.2*) takes the form

$$\begin{aligned}
\text{maximize:}\quad & z_2 = b_1 w_1 + \cdots + b_m w_m + 0 w_{m+1} + 0 w_{m+2} + \cdots + 0 w_{m+n} \\
\text{subject to:}\quad & a_{11} w_1 + a_{21} w_2 + \cdots + a_{m1} w_m + w_{m+1} = c_1 \\
& a_{12} w_1 + a_{22} w_2 + \cdots + a_{m2} w_m + w_{m+2} = c_2 \\
& \cdots\cdots\cdots\cdots\cdots\cdots\cdots\cdots \\
& a_{1n} w_1 + a_{2n} w_2 + \cdots + a_{mn} w_m + w_{m+n} = c_n \\
\text{with:}\quad & \text{all variables nonnegative}
\end{aligned}$$

Solving for the slack variables w_{m+j} $(j = 1, 2, \ldots, n)$ in the program, we find

$$w_{m+j} = c_j - \sum_{i=1}^{m} a_{ij} w_i$$

Substituting this result into (*2*), and noting that

$$z_2 = \sum_{i=1}^{m} b_i w_i$$

we obtain (*1*).

4.11 Prove the *complementary slackness principle* (Theorem 4.2).

For optimal solutions $\mathbf{X}^*$ and $\mathbf{W}^*$ of programs (*4.1*) and (*4.2*), respectively, relation (*1*) of Problem 4.10 becomes

$$\sum_{j=1}^{n} x_j^* w_{m+j}^* + \sum_{i=1}^{m} w_i^* x_{n+i}^* = 0$$

the right-hand side being 0 because of Theorem 4.1. As each variable in the above equation is nonnegative, the individual summands must vanish; that is,

$$x_j^* w_{m+j}^* = 0 \quad (j = 1, 2, \ldots, n) \qquad \text{and} \qquad w_i^* x_{n+i}^* = 0 \quad (i = 1, 2, \ldots, m)$$

On the left is the product of the jth component of $\mathbf{X}^*$ with the jth slack variable of program (*4.2*); if either term is positive, the other must be zero. On the right is the product of the ith component of $\mathbf{W}^*$ with the ith surplus variable of program (*4.1*); if either term is positive, the other must be zero.

4.12 Use the results of Problem 4.3 to verify the complementary slackness principles.

Considering the optimal tableau for the primal program (Tableau 2), we find that the first two slack variables, x_3 and x_4, are positive ($x_3 = 6$ and $x_4 = 2$); hence the first two dual variables, w_1 and w_2, should be zero. They are. We also find for the third dual variable, $w_3 = 1$. Since it is positive, the third slack variable in the primal, x_5, should be zero too. It is.

Next consider the optimal tableau for the dual program (Tableau 4′). The second surplus variable, w_5, is positive; hence the second primary variable, x_2, should be zero. It is. In addition, the first primal variable, x_1, is positive; so the first surplus variable in the dual system, w_4, should be zero too. It is.

4.13 Consider the following linear program.

$$\begin{aligned} \text{minimize:} \quad & z = -x_1 + 2x_2 + 3x_3 \\ \text{subject to:} \quad & -x_1 + x_2 + x_3 \geq 3 \\ & x_1 + 2x_2 + x_3 \leq 10 \\ \text{with:} \quad & \text{all variables nonnegative} \end{aligned}$$

The optimal simplex tableau for the standard form of the above problem (with surplus variable x_4, artificial variable x_5, and slack variable x_6) is

		x_1	x_2	x_3	x_4	x_5	x_6	
		-1	2	3	0	M	0	
x_2	2	-1	1	1	-1	1	0	3
x_6	0	3	0	-1	2	-2	1	4
$(c_j - z_j)$:		1	0	1	2	$M-2$	0	-6

If the objective function coefficient of the nonbasic variable x_1 is changed from -1 to -3, find the new optimum solution through sensitivity analysis.

The new simplex tableau becomes

		x_1	x_2	x_3	x_4	x_5	x_6	
		-3	2	3	0	M	0	
x_2	2	-1	1	1	-1	1	0	3
x_6	0	3^*	0	-1	2	-2	1	4
$(c_j - z_j)$:		-1	0	1	2	$M-2$	0	-6

Since $(c_1 - z_1) < 0$, the new solution is not optimal. The regular simplex method is used to reoptimize the problem, starting with x_1 as the entering variable.

The new optimal tableau is

		x_1	x_2	x_3	x_4	x_5	x_6	
		-3	2	3	0	M	0	
x_2	2	0	1	2/3	$-1/3$	1/3	1/3	13/3
x_1	-3	1	0	$-1/3$	2/3	$-2/3$	1/3	4/3
$(c_j - z_j)$:		0	0	$-2/3$	8/3	$M-8/3$	1/3	$-14/3$

The optimal solution is $x_1^* = 4/3$, $x_2^* = 13/3$, with $z^* = 14/3$.

4.14 Consider the following linear programming (LP) problem.

$$\begin{aligned} \text{maximize:} \quad & z = 3x_1 + 2x_2 \\ \text{subject to:} \quad & 4x_1 + 3x_2 \leq 120 \\ & x_1 + 3x_2 \leq 60 \\ \text{with:} \quad & x_1 \text{ and } x_2 \text{ nonnegative} \end{aligned}$$

The optimal simplex tableau for the standard form of the above program (with slack variables x_3 and x_4) is

		x_1	x_2	x_3	x_4	
		3	2	0	0	
x_1	3	1	0.75	0.25	0	30
x_4	0	0	2.25	−0.25	1	30
$(z_j - c_j)$:		0	0.25	0.75	0	90

If the objective function coefficient of the basic variable x_1 is changed from 3 to 1, find the new optimum solution through sensitivity analysis.

The new simplex tableau becomes

		x_1	x_2	x_3	x_4	
		1	2	0	0	
x_1	1	1	0.75	0.25	0	30
x_4	0	0	2.25*	−0.25	1	30
$(z_j - c_j)$:		0	−1.25	0.25	0	30

Since $(z_2 - c_2) < 0$, the new solution is not optimal. The regular simplex method is used to reoptimize the problem, starting with x_2 as the entering variable.

The new optimal tableau is

		x_1	x_2	x_3	x_4	
		1	2	0	0	
x_1	1	1	0	0.333	−0.333	20.00
x_2	2	0	1	−0.111	0.444	13.33
$(z_j - c_j)$:		0	0	−0.111	−0.556	46.67

The optimal solution is $x_1^* = 20.00$, $x_2^* = 13.33$, with $z^* = 46.67$.

4.15 Consider the following LP problem.

$$\begin{aligned} \text{maximize:} \quad & z = 3x_1 + 2x_2 + 4x_3 \\ \text{subject to:} \quad & 2x_1 + 3x_2 - x_3 \le 12 \\ & x_1 + x_2 + 2x_3 \le 10 \\ \text{with:} \quad & \text{all variables nonnegative} \end{aligned}$$

The optimal simplex tableau for the standard form of the above problem (with slack variables x_4 and x_5) is

		x_1	x_2	x_3	x_4	x_5	
		3	2	4	0	0	
x_1	3	1	1.4	0	0.4	0.2	6.8
x_3	4	0	−0.2	1	−0.2	0.4	1.6
$(z_j - c_j)$:		0	1.4	0	0.4	2.2	26.8

If the objective function is changed to maximize: $z = x_1 + 5x_2 + 8x_3$, find the new optimal solution through sensitivity analysis.

The new simplex tableau becomes

		x_1	x_2	x_3	x_4	x_5	
		1	5	8	0	0	
x_1	1	1	1.4*	0	0.4	0.2	6.8
x_3	8	0	−0.2	1	−0.2	0.4	1.6
$(z_j - c_j)$:		0	−5.2	0	−1.2	3.4	19.6

Since not all $(z_j - c_j)$ values are nonnegative, the new solution is not optimal. The regular simplex method is used to reoptimize the problem, starting with x_2 as the entering variable.

The new optimal tableau is

	x_1	x_2	x_3	x_4	x_5	
	1	5	8	0	0	
x_2	0.7143	1	0	0.2857	0.1428	4.86
x_3	0.1428	0	1	−0.1428	0.4286	2.57
$(z_j - c_j)$:	3.71	0	0	0.29	4.14	44.86

The optimal solution is $x_1^* = 0$, $x_2^* = 4.86$, $x_3^* = 2.57$, with $z^* = 44.86$.

4.16 Consider the following linear program.

$$\begin{aligned} \text{maximize:} \quad & z = x_1 + 9x_2 + x_3 \\ \text{subject to:} \quad & x_1 + 2x_2 + 3x_3 \le 9 \\ & 3x_1 + 2x_2 + 2x_3 \le 15 \\ \text{with:} \quad & \text{all variables nonnegative} \end{aligned}$$

The optimal simplex tableau for the standard form of the above problem (with slack variables x_4 and x_5), is

		x_1	x_2	x_3	x_4	x_5	
		1	9	1	0	0	
x_2	9	0.5	1	1.5	0.5	0	4.5
x_5	0	2	0	−1	−1	1	6
$(z_j - c_j)$:		3.5	0	12.5	4.5	0	40.5

If the new objective function is to maximize: $z = 6x_1 + x_2 + 15x_3$, find the new optimal solution by the sensitivity analysis approach.

The new simplex tableau becomes

		x_1	x_2	x_3	x_4	x_5	
		6	1	15	0	0	
x_2	1	0.5	1	1.5*	0.5	0	4.5
x_5	0	2	0	−1	−1	1	6
$(z_j - c_j)$:		−5.5	0	−13.5	0.5	0	4.5

Since now all $(z_j - c_j)$ values are nonnegative, the new solution is not optimal. The regular simplex method is used to reoptimize the problem, starting with x_3 as the entering variable.

The new optimal tableau is

		x_1	x_2	x_3	x_4	x_5	
		6	1	15	0	0	
x_3	15	0	0.571	1	0.429	−0.143	1.714
x_1	6	1	0.286	0	−0.286	0.429	3.857
$(z_j - c_j)$:		0	9.29	0	4.71	0.429	48.86

The optimal solution is $x_1^* = 3.857$, $x_2^* = 0$, $x_3^* = 1.714$, with $z^* = 48.86$.

4.17 Consider the following LP problem.

$$\begin{aligned} \text{maximize:} \quad & z = 25x_1 + 20x_2 \\ \text{subject to:} \quad & 3x_1 + 4x_2 \le 70 \\ & 8x_1 + 5x_2 \le 150 \\ & x_2 \le 20 \\ \text{with:} \quad & x_1 \text{ and } x_2 \text{ nonnegative} \end{aligned}$$

The optimal simplex tableau for the standard form of the above problem (with slack variables x_3, x_4,

and x_5) is as follows:

		x_1	x_2	x_3	x_4	x_5	
		25	20	0	0	0	
x_2	20	0	1	0.4706	−0.1765	0	6.4706
x_1	25	1	0	−0.2941	0.2353	0	14.7059
x_5	0	0	0	−0.4706	0.1765	1	13.5294
$(z_j - c_j)$:		0	0	2.06	2.35	0	497.06

Suppose the requirements vector is changed from $(70, 150, 20)^T$ to $(100, 60, 3)^T$. Using the sensitivity analysis approach, find the new optimal solution.

$$\mathbf{X}_S = \mathbf{S}^{-1}\mathbf{B} \quad \text{becomes} \quad \begin{pmatrix} x_2 \\ x_1 \\ x_5 \end{pmatrix} = \begin{pmatrix} 0.47 & -0.18 & 0 \\ -0.29 & 0.24 & 0 \\ -0.47 & 0.18 & 1 \end{pmatrix} \begin{pmatrix} 100 \\ 60 \\ 3 \end{pmatrix} = \begin{pmatrix} 36.2 \\ -14.6 \\ -33.2 \end{pmatrix}$$

Since x_1 and x_5 are negative, the new solution is not feasible. The dual simplex method is used to clear the infeasibility starting with the following tableau and departing the most negative variable x_5.

		x_1	x_2	x_3	x_4	x_5	
		25	20	0	0	0	
x_2	20	0	1	0.471	−0.176	0	36.2
x_1	25	1	0	−0.294	0.235	0	−14.6
x_5	0	0	0	−0.471*	0.176	1	−33.2
$(z_j - c_j)$:		0	0	2.07	2.355	0	359.0

The new final tableau is

		x_1	x_2	x_3	x_4	x_5	
		25	20	0	0	0	
x_2	20	0	1	0	0	1	3.000
x_1	25	1	0	0	0.125	−0.625	5.625
x_3	0	0	0	1	−0.375	−2.125	71.125
$(z_j - c_j)$:		0	0	0	3.125	4.375	200.625

The optimal and feasible solution is $x_1^* = 5.625$, $x_2^* = 3.00$, with $z^* = 200.625$.

4.18 The optimal solution to the standard form of the following LP problem

$$\begin{aligned} \text{maximize:} \quad & z = 35x_1 + 50x_2 \\ \text{subject to:} \quad & 4x_1 + 6x_2 \le 120 \\ & x_1 + x_2 \le 20 \\ & 2x_1 + 3x_2 \le 40 \\ \text{with:} \quad & x_1 \text{ and } x_2 \text{ nonnegative} \end{aligned}$$

is given below with slack variables x_3, x_4, and x_5:

		x_1	x_2	x_3	x_4	x_5	
		35	50	0	0	0	
x_3	0	0	0	1	0	−2	40
x_1	35	1	0	0	3	−1	20
x_2	50	0	1	0	−2	1	0
$(z_j - c_j)$:		0	0	0	5	15	700

If the RHS of the constraints is changed from $(120, 20, 40)^T$ to $(75, 15, 50)^T$, find the new optimum solution by applying sensitivity analysis.

$$\mathbf{X}_S = \mathbf{S}^{-1}\mathbf{B} \text{ becomes } \quad \begin{pmatrix} x_3 \\ x_1 \\ x_2 \end{pmatrix} = \begin{pmatrix} 1 & 0 & -2 \\ 0 & 3 & -1 \\ 0 & -2 & 1 \end{pmatrix} \begin{pmatrix} 75 \\ 15 \\ 50 \end{pmatrix} = \begin{pmatrix} -25 \\ -10 \\ 25 \end{pmatrix}$$

Since x_1 and x_3 are negative, the new solution is not feasible. The dual simplex method is used to clear the infeasibility starting with the following tableau and departing the most negative variable x_3.

		x_1	x_2	x_3	x_4	x_5	
		35	50	0	0	0	
x_3	0	0	0	1	0	−2*	−25
x_1	35	1	0	0	3	−1	−10
x_2	50	0	1	0	−2	1	25
$(z_j - c_j)$:		0	0	0	5	15	900

The new final tableau is

		x_1	x_2	x_3	x_4	x_5	
		35	50	0	0	0	
x_5	0	0	0	−0.5	0	1	12.5
x_1	35	1	0	−0.5	3	0	7.5
x_2	50	0	1	0.5	−2	0	7.5
$(z_j - c_j)$:		0	0	7.5	5	0	637.5

The optimal and feasible solution is $x_1^* = 7.5$, $x_2^* = 7.5$, with $z^* = 637.5$.

4.19 Given the LP problem below

$$\begin{aligned} \text{maximize:} \quad & z = 2x_1 + 3x_2 \\ \text{subject to:} \quad & x_1 + 2x_2 \le 8 \\ & 3x_1 + 2x_2 \le 15 \\ \text{with:} \quad & x_1 \text{ and } x_2 \text{ nonnegative,} \end{aligned}$$

consider the following optimal tableau of its standard form, where x_3 and x_4 are slack variables.

		x_1	x_2	x_3	x_4	
		2	3	0	0	
x_2	3	0	1	0.75	−0.25	2.25
x_1	2	1	0	−0.50	0.50	3.50
$(z_j - c_j)$:		0	0	1.25	0.25	13.75

If the new requirements vector is $(4, 20)^T$, find the new optimal solution by the sensitivity analysis procedure.

$$\mathbf{X}_S = \mathbf{S}^{-1}\mathbf{B} \text{ becomes} \qquad \begin{pmatrix} x_2 \\ x_1 \end{pmatrix} = \begin{pmatrix} 0.75 & -0.25 \\ -0.50 & 0.50 \end{pmatrix}\begin{pmatrix} 4 \\ 20 \end{pmatrix} = \begin{pmatrix} -2 \\ 8 \end{pmatrix}$$

Since $x_2 < 0$, the new solution is not feasible. The dual simplex method is used to clear the infeasibility starting with the following tableau and departing the negative variable x_2.

		x_1	x_2	x_3	x_4	
		2	3	0	0	
x_2	3	0	1	0.75	−0.25*	−2
x_1	2	1	0	−0.50	0.50	8
$(z_j - c_j)$:		0	0	1.25	0.25	10

The new final tableau is

		x_1	x_2	x_3	x_4	
		2	3	0	0	
x_4	0	0	−4	−3	1	8
x_1	2	1	2	1	0	4
$(z_j - c_j)$:		0	1	2	0	8

The optimal and feasible solution is $x_1^* = 8$, $x_2^* = 0$, with $z^* = 8$.

4.20 Consider Problem 4.13. If the RHS of the first constraint is changed from 3 to 7, find the new optimum solution through sensitivity analysis.

$$\mathbf{X}_S = \mathbf{S}^{-1}\mathbf{B} \text{ becomes} \qquad \begin{pmatrix} x_2 \\ x_6 \end{pmatrix} = \begin{pmatrix} 1 & 0 \\ -2 & 1 \end{pmatrix}\begin{pmatrix} 7 \\ 10 \end{pmatrix} = \begin{pmatrix} 7 \\ -4 \end{pmatrix}$$

Since $x_2 < 0$, the new solution is not feasible. The dual simplex method is used to clear the infeasibility starting with the following tableau and departing the negative variable x_6.

		x_1	x_2	x_3	x_4	x_5	x_6	
		−1	2	3	0	M	0	
x_2	2	−1	1	1	−1	1	0	7
x_6	0	3	0	−1*	2	−2	1	−4
$(c_j - z_j)$:		1	0	1	2	$M-2$	0	14

Copyrighted

The new final tableau is

		x_1	x_2	x_3	x_4	x_5	x_6	
		-1	2	3	0	M	0	
x_2	2	2	1	0	1	-1	1	3
x_3	3	-3	0	1	-2	2	-1	4
$(c_j - z_j)$:		4	0	0	4	$M-4$	1	-18

The optimal and feasible solution is $x_1^* = 0$, $x_2^* = 3$, $x_3^* = 4$, with $z^* = 18$.

4.21 Consider Problem 4.14. If the RHS of the constraints is changed from (120, 60) to (120, 25), find the new optimum solution through sensitivity analysis.

$$\mathbf{X}_S = \mathbf{S}^{-1}\mathbf{B} \text{ becomes} \qquad \begin{pmatrix} x_1 \\ x_4 \end{pmatrix} = \begin{pmatrix} 0.25 & 0 \\ -0.25 & 1 \end{pmatrix}\begin{pmatrix} 120 \\ 25 \end{pmatrix} = \begin{pmatrix} 30 \\ -5 \end{pmatrix}$$

Since $x_4 < 0$, the new solution is not feasible. The dual simplex method is used to clear the infeasibility starting with the following tableau.

		x_1	x_2	x_3	x_4	
		3	2	0	0	
x_3	3	1	0.75	0.25	0	30
x_4	0	0	2.25	-0.25^*	1	-5
$(z_j - c_j)$:		0	0.25	0.75	0	90

The new final tableau is

		x_1	x_2	x_3	x_4	
		3	2	0	0	
x_1	3	1	3	0	1	25
x_3	0	0	-9	1	-4	20
$(z_j - c_j)$:		0	7	0	3	75

The optimal and feasible solution is $x_1^* = 25$, $x_2^* = 0$, with $z^* = 75$.

4.22 The optimal tableau for the standard form of the following LP problem

$$\begin{aligned} \text{maximize:} \quad & z = 3x_1 + x_2 \\ \text{subject to:} \quad & x_1 + x_2 \le 6 \\ & 2x_1 + 3x_2 \le 8 \\ \text{with:} \quad & x_1 \text{ and } x_2 \text{ nonnegative} \end{aligned}$$

is as follows, where x_3 and x_4 are slack variables.

		x_1	x_2	x_3	x_4	
		3	1	0	0	
x_3	0	0	−0.5	1	−0.5	2
x_1	3	1	1.5	0	0.5	4
$(z_j - c_j)$:		0	3.5	0	1.5	12

Suppose the constraint coefficients of x_2 are changed from $(1, 3)^T$ to $(2, 0)^T$. By using the sensitivity analysis approach, find the new optimal solution.

The new constraint coefficients of x_2 in the optimal simplex tableau of the original primal problem are given by

$$\mathbf{S}^{-1}\mathbf{P}_2 = \begin{pmatrix} 1 & -0.5 \\ 0 & 0.5 \end{pmatrix}\begin{pmatrix} 2 \\ 0 \end{pmatrix} = \begin{pmatrix} 2 \\ 0 \end{pmatrix}$$

The new simplex tableau becomes

		x_1	x_2	x_3	x_4	
		3	1	0	0	
x_3	0	0	2*	1	−0.5	2
x_1	3	1	0	0	0.5	4
$(z_j - c_j)$:		0	−1	0	1.5	12

Since $(z_2 - c_2) < 0$, the new solution is not optional. The regular simplex method is resorted to for reoptimization, first by entering x_2.

The new optimal tableau is

		x_1	x_2	x_3	x_4	
		3	1	0	0	
x_2	1	0	1	0.5	−0.25	1
x_1	3	1	0	0	0.50	4
$(z_j - c_j)$:		0	0	0.5	1.25	13

The optimal solution is $x_1^* = 4$, $x_2^* = 1$, with $z^* = 13$.

4.23 Consider Problem 4.14. If the technological coefficients of x_2 are changed from $(3, 3)^T$ to $(2, 1)^T$, find the new optimal solution through sensitivity analysis.

The new technological coefficients of x_2 in the optimal simplex tableau of the original primal problem are given by

$$\mathbf{S}^{-1}\mathbf{P}_2 = \begin{pmatrix} 0.25 & 0 \\ -0.25 & 1 \end{pmatrix}\begin{pmatrix} 2 \\ 1 \end{pmatrix} = \begin{pmatrix} 0.5 \\ 0.5 \end{pmatrix}$$

The new simplex tableau becomes

		x_1	x_2	x_3	x_4	
		3	2	0	0	
x_1	3	1	0.5*	0.25	0	30
x_4	0	0	0.5	−0.25	1	30
$(z_j - c_j)$:		0	−0.5	0.75	0	90

Since $(z_2 - c_2) < 0$, the new solution is not optimal. The regular simplex method is resorted to for reoptimization, first by entering x_2.

The new optimal tableau is

		x_1	x_2	x_3	x_4	
		3	2	0	0	
x_2	2	2	1	0.5	0	60
x_4	0	−1	0	−0.5	1	0
$(z_j - c_j)$:		1	0	1	0	120

The optimal solution is $x_1^* = 0$, $x_2^* = 60$, with $z^* = 120$.

4.24 Consider Problem 4.13. If the technological coefficients of x_1 are changed from $(-1, 1)^T$ to $(2, 1)^T$, find the new optimum solution through sensitivity analysis.

The new technological coefficients of x_1 in the optimal simplex tableau of the original primal problem are given by

$$\mathbf{S}^{-1}\mathbf{P}_1 = \begin{pmatrix} 1 & 0 \\ -2 & 1 \end{pmatrix}\begin{pmatrix} 2 \\ 1 \end{pmatrix} = \begin{pmatrix} 2 \\ -3 \end{pmatrix}$$

The new simplex tableau becomes:

		x_1	x_2	x_3	x_4	x_5	x_6	
		−1	2	3	0	M	0	
x_2	2	2*	1	1	−1	1	0	3
x_6	0	−3	0	−1	2	−2	1	4
$(c_j - z_j)$:		−5	0	1	2	$M-2$	0	−6

Since $(c_1 - z_1) < 0$, the regular simplex method is not optimal. The regular simplex method is resorted to for reoptimization, first by entering x_1.

The new optimal tableau is

		x_1	x_2	x_3	x_4	x_5	x_6	
		−1	2	3	0	M	0	
x_1	−1	1	2	1	0	0	1	10
x_4	0	0	3	1	1	−1	2	17
$(c_j - z_j)$:		0	4	4	0	M	1	10

The optimal solution is $x_1^* = 10$, $x_2^* = 0$, $x_3^* = 0$, with $z^* = -10$.

4.25 A new variable x_4 is introduced in Problem 4.13 through the addition to $\mathbf{A}$ of a column $(2, -1)^T$ and to $\mathbf{C}^T$ of a component $c_4 = 1$. Find the new optimum solution through sensitivity analysis.

The new problem becomes

$$\begin{aligned} \text{maximize:} \quad & z = -x_1 + 2x_2 + 3x_3 + x_4 \\ \text{subject to:} \quad & -x_1 + x_2 + x_3 + 2x_4 \geq 3 \\ & -x_1 + 2x_2 + x_3 - x_4 \leq 10 \\ \text{with:} \quad & \text{all variables nonnegative} \end{aligned}$$

The technological coefficients of x_4 in the optimal tableau are

$$\mathbf{S}^{-1}\mathbf{P}_4 = \begin{pmatrix} 1 & 0 \\ -2 & 1 \end{pmatrix}\begin{pmatrix} 2 \\ -1 \end{pmatrix} = \begin{pmatrix} 2 \\ -5 \end{pmatrix}$$

The corresponding $(z_4 - c_4) = 1 - [(2)(2) + (0)(-5)] = -3$.

The modified simplex tableau is

		x_1	x_2	x_3	x_4	x_5	x_5	x_6	
		-1	2	3	1	0	M	0	
x_2	2	-1	1	1	2*	-1	1	0	3
x_6	0	3	0	-1	-5	2	-2	1	4
$(c_j - z_j)$:		1	0	1	-3	2	$M-2$	0	-6

The regular simplex method is applied to reoptimize the problem, starting with x_4 as the entering variable. The new optimal tableau is

		x_1	x_2	x_3	x_4	x_5	x_5	x_6	
		-1	2	3	1	0	M	0	
x_4	1	0	3	2	1	-1	1	1	13
x_1	-1	1	5	3	0	-1	1	2	23
$(c_j - z_j)$:		0	4	4	0	0	M	1	10

The optimal solution is $x_1^* = 23$, $x_2^* = 0$, $x_3^* = 0$, $x_4^* = 13$, with $z^* = -10$.

4.26 A new variable x_4 is introduced in Problem 4.14 through the addition to $\mathbf{A}$ of a column $\mathbf{P}_4 = (2, 2)^T$ and to $\mathbf{C}^T$ of a component $c_4 = 2$. Find the new optimum solution through sensitivity analysis.

The new problem becomes

$$\begin{aligned} \text{maximize:} \quad & z = 3x_1 + 2x_2 + 2x_4 \\ \text{subject to:} \quad & 4x_1 + 3x_2 + 2x_4 \leq 120 \\ & x_1 + 3x_2 + 2x_4 \leq 60 \\ \text{with:} \quad & \text{all variables nonnegative} \end{aligned}$$

The technological coefficients of x_4 in the optimal tableau are

$$\mathbf{S}^{-1}\mathbf{P}_4 = \begin{pmatrix} 0.25 & 0 \\ -0.25 & 1 \end{pmatrix}\begin{pmatrix} 2 \\ 2 \end{pmatrix} = \begin{pmatrix} 0.5 \\ 1.5 \end{pmatrix}$$

The corresponding $(z_4 - c_4) = [(3)(0.5) + (0)(1.5)] - 2 = -0.5$.

The modified simplex tableau is

		x_1	x_2	x_k	x_3	x_4	
		3	2	2	0	0	
x_1	3	1	0.75	0.5	0.25	0	30
x_4	0	0	2.25	1.5*	−0.25	1	30
$(z_j - c_j)$:		0	0.25	−0.5	0.75	0	90

The regular simplex method is applied to reoptimize the problem, starting with x_k as the entering variable.

The new optimal tableau is

		x_1	x_2	x_k	x_3	x_4	
		3	2	2	0	0	
x_1	3	1	0	0	0.33	−0.33	20
x_k	2	0	1.5	1	−0.17	0.67	20
$(z_j - c_j)$:		0	1	0	0.67	0.33	100

The optimal solution is $x_1^* = 20$, $x_2^* = 0$, $x_k^* = 20$, with $z^* = 100$.

4.27 If a new constraint $x_1 + x_3 \geq 2$ is added to Problem 4.13, find the new optimum solution through sensitivity analysis.

The current optimal solution ($x_1^* = 0$, $x_2^* = 3$) does not satisfy the new constraint and hence becomes infeasible. Add the new constraint to the current optimal tableau. The new slack variable is x_7 and the new simplex tableau is

		x_1	x_2	x_3	x_4	x_5	x_6	x_7	
		−1	2	3	0	M	0	0	
x_2	2	−1	1	1	−1	1	0	0	3
x_6	0	3	0	−1	2	−2	1	0	4
x_7	0	−1	0	−1*	0	0	0	1	−2
$(c_j - z_j)$:		1	0	1	2	$M - 2$	0	0	−6

The dual simplex method is used to overcome the infeasibility by departing the variable x_7. The new tableau is

		x_1	x_2	x_3	x_4	x_5	x_6	x_7	
		−1	2	3	0	M	0	0	
x_2	2	−2	1	0	−1	1	0	1	1
x_6	0	4	0	0	2	−2	1	−1	6
x_3	3	1	0	1	0	0	0	−1	2
$(c_j - z_j)$:		0	0	0	2	$M - 2$	0	1	−8

The above tableau gives the optimal solution as $x_1^* = 0$, $x_2^* = 1$, $x_3^* = 2$, with $z^* = 8$.

4.28 If a new constraint $x_1 \leq 25$ is added to Problem 4.14, find the new optimum solution through sensitivity analysis.

The current optimal solution ($x_1^* = 30, x_2^* = 0$) does not satisfy the new constraint and hence becomes infeasible. Add the new constraint to the current optimal tableau. The new slack variable is x_5 and the new simplex tableau is

		x_1	x_2	x_3	x_4	x_5	
		3	2	0	0	0	
x_1	3	1	0.75	0.25	0	0	30
x_4	0	0	2.25	−0.25	1	0	30
x_5	0	1	0	0	0	1	25
$(z_j - c_j)$:		0	0.25	0.75	0	0	90

By using the row operations, the coefficient of x_1 in the new constraint is made zero. The modified tableau becomes

		x_1	x_2	x_3	x_4	x_5	
		3	2	0	0	0	
x_1	3	1	0.75	0.25	0	0	30
x_4	0	0	2.25	−0.25	1	0	30
x_5	0	0	−0.75*	−2.25	0	1	−5
$(z_j - c_j)$:		0	0.25	0.75	0	0	90

The dual simplex method is used to overcome the infeasibility by departing the variable x_5.

The new tableau is

		x_1	x_2	x_3	x_4	x_5	
		3	2	0	0	0	
x_1	3	1	0	0	0	1	25
x_4	0	0	0	−1	1	3	15
x_2	2	0	1	0.33	0	−1.33	6.67
$(z_j - c_j)$:		0	0	0.67	0	0.33	88.33

The above tableau gives the optimal and feasible solution as $x_1^* = 25$, $x_2^* = 6.67$, with $z^* = 88.33$.

4.29 Consider the following linear program.

$$\begin{aligned} \text{minimize:} \quad & z = x_1 - 2x_2 - x_3 \\ \text{subject to:} \quad & x_1 + x_2 + x_3 \leq 6 \\ & x_1 - 2x_2 \leq 4 \\ \text{with:} \quad & \text{all variables nonnegative} \end{aligned}$$

The optimal solution for its standard form is given by the following tableau, where x_4 and x_5 are slack variables.

		x_1	x_2	x_3	x_4	x_5	
		1	−2	−1	0	0	
x_2	−2	1	1	1	1	0	6
x_5	0	3	0	2	2	1	16
$(c_j - z_j)$:		3	0	1	2	0	12

If the new constraint $-x_2 + 2x_3 \geq 4$ is added to the problem, find the new optimal solution using sensitivity analysis.

The current optimal solution ($x_1^* = 0, x_2^* = 6, x_3^* = 0$) does not satisfy the new constraint and hence becomes infeasible. Add the new constraint to the current optimal tableau. The new slack variable is x_6 and the new simplex tableau is

		x_1	x_2	x_3	x_4	x_5	x_6	
		1	−2	−1	0	0	0	
x_2	−2	1	1	1	1	0	0	6
x_5	0	3	0	2	2	1	0	16
x_6	0	0	1	−2	0	0	1	−4
$(c_j - z_j)$:		3	0	1	2	0	0	12

By using the row operations, the coefficient of x_2 in the new constraint is made zero. The modified tableau becomes

		x_1	x_2	x_3	x_4	x_5	x_6	
		1	−2	−1	0	0	0	
x_2	−2	1	1	1	1	0	0	6
x_5	0	3	0	2	2	1	0	16
x_6	0	−1	0	−3*	−1	0	0	−10
$(c_j - z_j)$:		3	0	1	2	0	0	12

The dual simplex method is used to overcome the infeasibility by departing the variable x_6.

The new tableau is

		x_1	x_2	x_3	x_4	x_5	x_6	
		1	−2	−1	0	0	0	
x_2	−2	0.67	1	0	0.67	0	0.33	2.67
x_5	0	2.33	0	0	1.33	1	0.67	9.33
x_3	−1	0.33	0	1	0.33	0	−0.33	3.33
$(c_j - z_j)$:		2.67	0	0	1.67	0	0.33	8.67

The above tableau gives the optimal and feasible solutions as $x_1^* = 0, x_2^* = 2.67, x_3^* = 3.33$, with $z^* = -8.67$.

Supplementary Problems

In problems 4.30 through 4.34, determine the duals of the given programs.

4.30

$$\begin{aligned} \text{minimize:}\quad & z = 12x_1 + 26x_2 + 80x_3 \\ \text{subject to:}\quad & 2x_1 + 6x_2 + 5x_3 \geq 4 \\ & 4x_1 + 2x_2 + x_3 \geq 10 \\ & x_1 + x_2 + 2x_3 \geq 6 \\ \text{with:}\quad & \text{all variables nonnegative} \end{aligned}$$

4.31

$$\begin{aligned} \text{minimize:}\quad & z = 3x_1 + 2x_2 + x_3 + 2x_4 + 3x_5 \\ \text{subject to:}\quad & 2x_1 + 5x_2 + x_4 + x_5 \geq 6 \\ & 4x_2 - 2x_3 + 2x_4 + 3x_5 \geq 5 \\ & x_1 - 6x_2 + 3x_3 + 7x_4 + 5x_5 \leq 7 \\ \text{with:}\quad & \text{all variables nonnegative} \end{aligned}$$

4.32

$$\begin{aligned} \text{maximize:}\quad & z = 6x_1 - x_2 + 3x_3 \\ \text{subject to:}\quad & 7x_1 + 11x_2 + 3x_3 \leq 25 \\ & 2x_1 + 8x_2 + 6x_3 \leq 30 \\ & 6x_1 + x_2 + 7x_3 \leq 35 \\ \text{with:}\quad & \text{all variables nonnegative} \end{aligned}$$

4.33

$$\begin{aligned} \text{maximize:}\quad & z = 10x_1 + 15x_2 + 20x_3 + 25x_4 \\ \text{subject to:}\quad & 8x_1 + 6x_2 - x_3 + x_4 \geq 16 \\ & 3x_1 + 2x_3 - x_4 = 20 \\ \text{with:}\quad & \text{all variables nonnegative} \end{aligned}$$

4.34

$$\begin{aligned} \text{minimize:}\quad & z = x_1 + 2x_2 + x_3 \\ \text{subject to:}\quad & x_2 + x_3 = 1 \\ & 3x_1 + x_2 + 3x_3 = 4 \\ \text{with:}\quad & \text{all variables nonnegative} \end{aligned}$$

4.35 Show that the program given in Problem 4.30 has the same optimal value as its dual by solving both programs directly.

4.36 Find the optimal solution to the program given in Problem 4.31 by solving its dual.

4.37 Determine the symmetric dual of the program given in Problem 3.3. Solve the dual directly and thereby verify that if either a primal or its symmetric dual has feasible solutions but not optimum, then the other has no feasible solution.

4.38 By finding the unsymmetric dual of the program

$$\begin{aligned} \text{minimize:}\quad & z = -x_1 - x_2 \\ \text{subject to:}\quad & x_1 - x_2 = 5 \\ & x_1 - x_2 = -5 \\ \text{with:}\quad & \text{all variables nonnegative} \end{aligned}$$

show that it is possible for both a primal and its dual to have no feasible solutions.

Copyrighted

4.39 Use the results of Problem 4.4 to verify the complementary slackness principle.

4.40 Verify (*4.7*) and (*4.8*) for the program given in Problem 4.34.

4.41 Prove that if $\mathbf{X}_0$ and $\mathbf{W}_0$ are feasible solutions of programs (*4.1*) and (*4.2*), respectively, such that $\mathbf{C}^T\mathbf{X}_0 = \mathbf{B}^T\mathbf{W}_0$, then $\mathbf{X}_0$ and $\mathbf{W}_0$ are optimal solutions to their respective programs.

4.42 Consider Problem 4.13. If the objective function coefficient of the basic variable x_2 is changed from 2 to 4, find the new optimum solution through sensitivity analysis.

4.43 Consider Problem 4.14. If the objective function coefficient of the nonbasic variable x_2 is changed from 2 to 4, find the new optimum solution through sensitivity analysis.

4.44 Consider Problem 4.15. Using sensitivity analysis, find the optimum solution for each of the following new objective functions to be maximized:
(*a*) $z = x_1 + 4x_2 + 4x_3$; (*b*) $z = 5x_1 + x_2 + 3x_3$; (*c*) $z = 2x_1 + 3x_2 + 7x_3$.

4.45 Consider Problem 4.16. Using sensitivity analysis, find the optimum solution for each of the following new objective functions to be maximized:
(*a*) $z = 5x_1 + x_2 + 2x_3$; (*b*) $z = 3x_1 + 7x_2 + 12x_3$; (*c*) $z = 7x_1 + x_2 + 14x_3$.

4.46 Consider Problem 4.17. Using sensitivity analysis, find the optimum solution for each of the following new requirements vectors:
(*a*) $(80, 120, 20)^T$; (*b*) $(50, 150, 20)^T$; (*c*) $(90, 150, 5)^T$.

4.47 Consider Problem 4.18. Using sensitivity analysis, find the optimum solution for each of the following changes on the specific elements of the requirements vector:
(*a*) the RHS of the first constraint is reduced from 120 to 70.
(*b*) the RHS of the second constraint is reduced from 20 to 10.
(*c*) the RHS of the third constraint is increased from 40 to 55.

4.48 Consider Problem 4.19. Using sensitivity analysis, find the optimum solution for each of the following new RHS vectors for the constraints:
(*a*) $(6, 20)^T$; (*b*) $(20, 15)^T$; (*c*)$(16, 8)^T$.

4.49 Consider Problem 4.13. Using sensitivity analysis, find the optimum solution for each of the following new requirements vectors:
(*a*) $(3, 20)^T$; (*b*) $(5, 10)^T$; (*c*) $(3, 5)^T$.

4.50 Consider Example 4.2. Using sensitivity analysis, find the optimum solution for each of the following new RHS vectors for the constraints:
(*a*) $(30, 60)^T$; (*b*) $(40, 50)^T$; (*c*) $(15, 60)^T$.

4.51 Consider Problem 4.16. Using sensitivity analysis, find the optimum solution for each of the following changes in technological coefficients of variables in constraints:
(*a*) change in a_{11} from 1 to -1;
(*b*) change in a_{23} from 2 to 5;
(*c*) change in a_{13} from 3 to 0.

4.52 Consider Problem 4.22. If the technological coefficients of x_2 are changed from $(1, 3)^T$ to $(3, 0.5)^T$, find the new optimum solution through sensitivity analysis.

4.53 Consider Problem 4.14. Suppose the coefficients of x_2 in the constraints are changed from $(3, 3)^T$ to $(1, 2)^T$, find the new optimum solution through sensitivity analysis.

4.54 Consider Problem 4.13. Let the constraint coefficients for the variable x_1 be changed from $(-1, 1)^T$ to $(1, 3)^T$. Using the sensitivity analysis approach, obtain the new optimum solution.

4.55 Consider Problem 4.22. Suppose a new activity x_3 is added to objective function and constraint coefficients as follows:

(*a*) $c_3 = 4$, $a_{13} = 2$, $a_{23} = 2$;

(*b*) $c_3 = 6$, $a_{13} = 1$, $a_{23} = 2$.

Using sensitivity analysis, find the new optimum solution for each of the above two cases.

4.56 Consider Problem 4.15. A new variable x_4 is introduced in objective function and constraint coefficients as follows:

(*a*) $c_4 = 2$, $a_{14} = 1$, $a_{24} = 3$;

(*b*) $c_4 = 5$, $a_{14} = 3$, $a_{24} = 1$.

For each of the above two cases, find the new optimum solution through sensitivity analysis.

4.57 Consider Problem 4.29. Using sensitivity analysis find the new optimum solution for addition of each of the following constraints separately:

(*a*) $2x_1 + x_2 + x_3 \leq 8$;

(*b*) $x_1 \qquad + x_3 \geq 3$.

4.58 Consider Problem 4.15. For individual introduction of each of the following constraints, find the new optimum solution through sensitivity analysis:

(*a*) $3x_1 + 2x_2 + x_3 \leq 16$;

(*b*) $x_1 + x_2 \qquad \geq 5$;

(*c*) $2x_1 + 3x_2 + x_3 = 18$.

Chapter 5

Linear Programming: Extensions

THE REVISED SIMPLEX METHOD

Consider the following linear programming problem in standard matrix form:

$$\begin{aligned} \text{maximize:} \quad & z = \mathbf{C}^T\mathbf{X} \\ \text{subject to:} \quad & \mathbf{AX} = \mathbf{B} \\ \text{with:} \quad & \mathbf{X} \geq \mathbf{0} \end{aligned}$$

where $\mathbf{X}$ is the column vector of unknowns, including all slack, surplus, and artificial variables; $\mathbf{C}^T$ is the row vector of corresponding costs; $\mathbf{A}$ is the coefficient matrix of the constraint equations; and $\mathbf{B}$ is the column vector of the right-hand side of the constraint equations. They are represented as follows:

$$\mathbf{X} = \begin{pmatrix} x_1 \\ x_2 \\ \vdots \\ x_n \end{pmatrix}, \mathbf{C} = \begin{pmatrix} c_1 \\ c_2 \\ \vdots \\ c_n \end{pmatrix}, \mathbf{B} = \begin{pmatrix} B_1 \\ B_2 \\ \vdots \\ B_m \end{pmatrix}, \mathbf{0} = \begin{pmatrix} 0 \\ 0 \\ \vdots \\ 0 \end{pmatrix}, \mathbf{A} = \begin{pmatrix} a_{11} & a_{12} & \cdots & a_{1n} \\ a_{21} & a_{22} & \cdots & a_{2n} \\ \vdots & \vdots & \vdots\vdots\vdots & \vdots \\ a_{m1} & a_{m2} & \cdots & a_{mn} \end{pmatrix}$$

Let $\mathbf{X}_s$ = the column vector of basic variables, $\mathbf{C}_S^T$ = the row vector of costs corresponding to $\mathbf{X}_S$, and $\mathbf{S}$ = the basis matrix corresponding to $\mathbf{X}_S$.

STEP 1: ENTERING VECTOR $\mathbf{P}_k$:

For every nonbasic vector $\mathbf{P}_j$, calculate the coefficient

$z_j - c_j = \mathbf{WP}_j - c_j$ (maximization program), or

$c_j - z_j = c_j - \mathbf{WP}_j$ (minimization program), where $\mathbf{W} = \mathbf{C}_S^T\mathbf{S}^{-1}$.

The nonbasic vector $\mathbf{P}_j$ with the most negative coefficient becomes the entering vector (**E.V.**), $\mathbf{P}_k$.

If more than one candidate for E.V. exists, choose one.

STEP 2: DEPARTING VECTOR $\mathbf{P}_r$:

(a) Calculate the current basis $\mathbf{X}_S$: $\mathbf{X}_S = \mathbf{S}^{-1}\mathbf{B}$

(b) Corresponding to the entering vector $\mathbf{P}_k$, calculate the constraint coefficients t_k: $t_k = \mathbf{S}^{-1}\mathbf{P}_k$

(c) calculate the ratio θ:

$$\theta = \min_i \left\{ \frac{(\mathbf{X}_S)_i}{t_{ik}}, t_{ik} > 0 \right\}, i = 1, 2, \ldots, m$$

The departing vector (**D.V.**), $\mathbf{P}_r$, is the one that satisfies the above condition.

NOTE: If all $t_{ik} \leq 0$, there is no bounded solution for the problem. Stop.

STEP 3: NEW BASIS:

$$\mathbf{S}_{new}^{-1} = \mathbf{E}\mathbf{S}^{-1}, \text{ where } \mathbf{E} = (\mathbf{u}_1, \ldots, \mathbf{u}_{r-1}, \eta, \mathbf{u}_{r+1}, \ldots, \mathbf{u}_m)$$

Note,

$$\eta = \begin{pmatrix} \eta_1 \\ \eta_2 \\ \vdots \\ \eta_m \end{pmatrix}, \text{ where } \eta_i = \begin{Bmatrix} -\dfrac{t_{ik}}{t_{rk}}, \text{ if } i \neq r \\ \dfrac{1}{t_{rk}}, \text{ if } i = r \end{Bmatrix}$$

and u_i is a column vector with 1 in the ith element and 0 in the other $(m-1)$ elements.

Set $\mathbf{S}^{-1} = \mathbf{S}_{new}^{-1}$ and repeat steps 1 through 3, until the following optimality condition is satisfied.

$$z_j - c_j \geq 0 \text{ (maximization problem), or}$$
$$c_j - z_j \geq 0 \text{ (minimization problem)}$$

Then the optimal solution is as follows:

$$\mathbf{X}_S = \mathbf{S}^{-1}\mathbf{B}; \quad z = \mathbf{C}_S^T\mathbf{X}_S$$

KARMARKAR'S ALGORITHM

The simplex method of linear programming finds the optimum solution by starting at the origin and moving along the adjacent corner points of the feasible solution space. Although this technique has been successful in solving LP problems of various sizes, the number of iterations becomes prohibitive for some huge problems. This is an exponential time algorithm.

On the other hand, Karmarkar's interior point LP algorithm is a polynomial time algorithm. This new approach finds the optimum solution by starting at a trial solution and shooting through the interior of the feasible solution space. Although this projective algorithm may be advantageous in solving very large LP problems, it becomes very cumbersome for not-so-large problems. In this section, we will illustrate Karmarkar's concepts through some small problems.

Consider the following form of the linear programming problem:

$$\begin{aligned} \text{minimize:} \quad & z = \mathbf{C}^T\mathbf{X} \\ \text{subject to:} \quad & \mathbf{A}\mathbf{X} = \mathbf{0} \\ & \mathbf{1}\mathbf{X} = 1 \\ & \mathbf{X} \geq \mathbf{0} \end{aligned}$$

where $\mathbf{X}$ is a column vector of size n; $\mathbf{C}$ is an integer column vector of size n; $\mathbf{1}$ is a unit row vector of size n; $\mathbf{A}$ is an integer matrix of size $(m \times n)$; $n \geq 2$.

In addition, assume the following two conditions:

1. $\mathbf{X}_0 = (1/n, \ldots, 1/n)$ is a feasible solution.
2. minimum $z = 0$

SUMMARY OF KARMARKAR'S ITERATIVE PROCEDURE

1. Preliminary Step:

$$k = 0$$
$$\mathbf{X}_0 = (1/n, \ldots, 1/n)^T$$
$$r = 1/\sqrt{n(n-1)}$$
$$\alpha = (n-1)/3n$$

2. ***Iteration k:***

(*a*) Define the following:

(i) $\mathbf{Y}_0 = \mathbf{X}_0$

(ii) $\mathbf{D}_k = \text{diag}\{\mathbf{X}_k\}$, which is the diagonal matrix whose diagonal consists of the elements of $\mathbf{X}_k$.

(iii) $\mathbf{P} = \begin{pmatrix} \mathbf{A}\mathbf{D}_k \\ \mathbf{1} \end{pmatrix}$

(iv) $\bar{\mathbf{C}} = \mathbf{C}^T\mathbf{D}_k$

(*b*) Compute the following:

(i) $\mathbf{C}_p = [\mathbf{I} - \mathbf{P}^T(\mathbf{P}\mathbf{P}^T)^{-1}\mathbf{P}]\bar{\mathbf{C}}^T$

Note: If $\mathbf{C}_p = \mathbf{0}$, any feasible solution becomes an optimal solution. Stop.

(ii) $\mathbf{Y}_{new} = \mathbf{Y}_0 - \alpha r \dfrac{\mathbf{C}_p}{\|\mathbf{C}_p\|}$

(iii) $\mathbf{X}_{k+1} = (\mathbf{D}_k\mathbf{Y}_{new})/(\mathbf{1}\mathbf{D}_k\mathbf{Y}_{new})$

(iv) $z = \mathbf{C}^T\mathbf{X}_{k+1}$

(v) $k = k + 1$

(vi) Repeat iteration k until the objective function (z) value is less than a prescribed tolerance ϵ.

TRANSFORMING A LINEAR PROGRAMMING PROBLEM INTO KARMARKAR'S SPECIAL FORM

Consider the following linear program in the matrix form:

$$\begin{aligned} \text{minimize:} \quad & z = \mathbf{C}^T\mathbf{X} \\ \text{subject to:} \quad & \mathbf{A}\mathbf{X} \geq \mathbf{B} \\ \text{with:} \quad & \mathbf{X} \geq \mathbf{0} \end{aligned}$$

The simplified steps of converting the above problem into Karmarkar's special form are as follows:

1. Since every primal linear program in the variables $x_1, x_2, \ldots, x_n$ has associated with it a dual linear program in the variables $w_1, w_2, \ldots, w_m$ (where m is the number of constraints in the original program), write the dual of the given primal problem as shown below:

$$\begin{aligned} \text{maximize:} \quad & z = \mathbf{B}^T\mathbf{W} \\ \text{subject to:} \quad & \mathbf{A}^T\mathbf{W} \leq \mathbf{C} \\ \text{with:} \quad & \mathbf{W} \geq \mathbf{0} \end{aligned}$$

2. (*a*) Introduce slack and surplus variables to the primal and dual problems.
   (*b*) Combine primal and dual problems.

3. (*a*) Introduce a bounding constraint

$$\sum x_i + \sum w_i \leq K$$

   (K should be sufficiently large to include all feasible solutions of the original problem.)
   (*b*) Introduce a slack variable s in the bounding constraint and obtain the following equation:

$$\sum x_i + \sum w_i + s = K$$

4. (*a*) Introduce a dummy variable d (subject to the condition $d = 1$) to homogenize the constraints.
   (*b*) Replace the equations

$$\sum x_i + \sum w_i + s = K$$

$$\text{and } d = 1$$

with the following equivalent equations:

$$\sum x_i + \sum w_i + s - Kd = 0$$
$$\text{and } \sum x_i + \sum w_i + s + d = (K+1)$$

5. Introduce the following transformations so as to obtain one on the RHS of the last equation:

$$x_j = (K+1)y_j,\ j = 1, 2, \ldots, m+n$$
$$w_j = (K+1)y_{m+n+j},\ j = 1, 2, \ldots, m+n$$
$$s = (K+1)y_{2m+2n+1}$$
$$d = (K+1)y_{2m+2n+2}$$

6. Introduce an artificial variable $y_{2m+2n+3}$ (to be minimized) in all the equations such that the sum of the coefficients in each homogeneous equation is zero and the coefficient of the artificial variable in the last equation is one.

The resultant problem is in Karmarkar's special form.

Solved Problems

5.1 Use the revised simplex method to solve the following problem.

$$\begin{aligned} \text{maximize:}\quad & z = 10x_1 + 11x_2 \\ \text{subject to:}\quad & x_1 + 2x_2 \le 150 \\ & 3x_1 + 4x_2 \le 200 \\ & 6x_1 + x_2 \le 175 \\ \text{with:}\quad & x_1 \text{ and } x_2 \text{ nonnegative} \end{aligned}$$

This program is put in standard form by introducing the slack variables x_3, x_4, and x_5.

$$\begin{aligned} \text{maximize:}\quad & z = 10x_1 + 11x_2 + 0x_3 + 0x_4 + 0x_5 \\ \text{subject to:}\quad & x_1 + 2x_2 + x_3 = 150 \\ & 3x_1 + 4x_2 + x_4 = 200 \\ & 6x_1 + x_2 + x_5 = 175 \\ \text{with:}\quad & \text{all variables nonnegative} \end{aligned}$$

$$\mathbf{P}_1 = \begin{pmatrix} 1 \\ 3 \\ 6 \end{pmatrix}, \mathbf{P}_2 = \begin{pmatrix} 2 \\ 4 \\ 1 \end{pmatrix}, \mathbf{P}_3 = \begin{pmatrix} 1 \\ 0 \\ 0 \end{pmatrix}, \mathbf{P}_4 = \begin{pmatrix} 0 \\ 1 \\ 0 \end{pmatrix}, \mathbf{P}_5 = \begin{pmatrix} 0 \\ 0 \\ 0 \end{pmatrix}, \mathbf{B} = \begin{pmatrix} 150 \\ 200 \\ 175 \end{pmatrix}$$

Initialization:

$$\mathbf{X}_S = (x_3, x_4, x_5)^T;\ \mathbf{C}_S^T = (0, 0, 0)$$

$$\mathbf{S} = (\mathbf{P}_3, \mathbf{P}_4, \mathbf{P}_5) = \mathbf{I} = \mathbf{S}^{-1} = \begin{pmatrix} 1 & 0 & 0 \\ 0 & 1 & 0 \\ 0 & 0 & 1 \end{pmatrix}$$

Iteration No. 1:
The nonbasic vectors are $\mathbf{P}_1$ and $\mathbf{P}_2$.

(*a*) Entering Vector:

$$\mathbf{W} = \mathbf{C}_S^T\mathbf{S}^{-1} = (0, 0, 0)\mathbf{I} = (0, 0, 0)$$

$$(z_1 - c_1, z_2 - c_2) = \mathbf{W}(\mathbf{P}_1, \mathbf{P}_2) - (c_1, c_2) = (0, 0, 0)\begin{pmatrix} 1 & 2 \\ 3 & 4 \\ 6 & 1 \end{pmatrix} - (10, 11) = (-10, -11)$$

Since the most negative coefficient corresponds to $\mathbf{P}_2$, it becomes the entering vector (**E.V.**).

(*b*) Departing Vector:

$$\mathbf{X}_S = \mathbf{S}^{-1}\mathbf{B} = \mathbf{IB} = \mathbf{B} = \begin{pmatrix} 150 \\ 200 \\ 175 \end{pmatrix}$$

$$\mathbf{t}_2 = \mathbf{S}^{-1}\mathbf{P}_2 = \mathbf{IP}_2 = \mathbf{P}_2 = \begin{pmatrix} 2 \\ 4 \\ 1 \end{pmatrix}$$

$$\theta = \min\left\{\frac{150}{2}, \frac{200}{4}, \frac{175}{1}\right\} = 50$$

Since the minimum ratio corresponds to $\mathbf{P}_4$, it becomes the departing vector (**D.V.**).

(*c*) New Basis:

$$\boldsymbol{\eta} = \begin{pmatrix} \dfrac{-t_{32}}{t_{42}} \\ \dfrac{1}{t_{42}} \\ \dfrac{-t_{52}}{t_{42}} \end{pmatrix} = \begin{pmatrix} -2/4 \\ 1/4 \\ -1/4 \end{pmatrix} = \begin{pmatrix} -1/2 \\ 1/4 \\ -1/4 \end{pmatrix}; \qquad \mathbf{E} = (\mathbf{u}_1, \boldsymbol{\eta}, \mathbf{u}_3)$$

$$\mathbf{S}_{new}^{-1} = \mathbf{ES}^{-1} = \mathbf{EI} = \mathbf{E} = \begin{pmatrix} 1 & -1/2 & 0 \\ 0 & 1/4 & 0 \\ 0 & -1/4 & 1 \end{pmatrix}$$

Summary of Iteration No. 1:

$$\mathbf{X}_S = (x_3, x_2, x_5)^T; \quad \mathbf{C}_S^T = (0, 11, 0)$$

Iteration No. 2:
Now the nonbasic vectors are $\mathbf{P}_1$ and $\mathbf{P}_4$.

(*a*) Entering Vector:

$$\mathbf{W} = \mathbf{C}_S^T\mathbf{S}^{-1} = (0, 11, 0)\begin{pmatrix} 1 & -1/2 & 0 \\ 0 & 1/4 & 0 \\ 0 & -1/4 & 1 \end{pmatrix} = (0, 11/4, 0)$$

$$(z_1 - c_1, z_4 - c_4) = \mathbf{W}(\mathbf{P}_1, \mathbf{P}_4) - (c_1, c_4) = (0, 11/4, 0)\begin{pmatrix} 1 & 0 \\ 3 & 1 \\ 6 & 0 \end{pmatrix} - (10, 0) = (-7/4, 11/4)$$

Since the most negative coefficient corresponds to $\mathbf{P}_1$, it becomes the entering vector (**E.V.**).

(*b*) Departing Vector:

$$\mathbf{X}_S = \mathbf{S}^{-1}\mathbf{B} = \begin{pmatrix} 1 & -1/2 & 0 \\ 0 & 1/4 & 0 \\ 0 & -1/4 & 1 \end{pmatrix}\begin{pmatrix} 150 \\ 200 \\ 175 \end{pmatrix} = \begin{pmatrix} 50 \\ 50 \\ 125 \end{pmatrix}$$

$$t_1 = \mathbf{S}^{-1}\mathbf{P}_1 = \begin{pmatrix} 1 & -1/2 & 0 \\ 0 & 1/4 & 0 \\ 0 & -1/4 & 1 \end{pmatrix}\begin{pmatrix} 1 \\ 3 \\ 6 \end{pmatrix} = \begin{pmatrix} -1/2 \\ 3/4 \\ 21/4 \end{pmatrix}$$

$$\theta = \min\left\{-, \frac{50}{3/4}, \frac{125}{21/4}\right\} = 500/21$$

Since the minimum ratio corresponds to $\mathbf{P}_5$, it becomes the departing vector (**D.V.**).

(*c*) New Basis:

$$\eta = \begin{pmatrix} \dfrac{-t_{31}}{t_{51}} \\ \dfrac{-t_{21}}{t_{51}} \\ \dfrac{1}{t_{51}} \end{pmatrix} = \begin{pmatrix} -\dfrac{-1/2}{21/4} \\ -\dfrac{3/4}{21/4} \\ \dfrac{1}{21/4} \end{pmatrix} = \begin{pmatrix} 2/21 \\ -1/7 \\ 4/21 \end{pmatrix}; \qquad \mathbf{E} = (\mathbf{u}_1, \mathbf{u}_2, \eta)$$

$$\mathbf{S}_{\text{new}}^{-1} = \mathbf{E}\mathbf{S}^{-1} = \begin{pmatrix} 1 & 0 & 2/21 \\ 0 & 1 & -1/7 \\ 0 & 0 & 4/21 \end{pmatrix}\begin{pmatrix} 1 & -1/2 & 0 \\ 0 & 1/4 & 0 \\ 0 & -1/4 & 1 \end{pmatrix} = \begin{pmatrix} 1 & -11/21 & 2/21 \\ 0 & 2/7 & -1/7 \\ 0 & -1/21 & 4/21 \end{pmatrix}$$

Summary of Iteration No. 2:

$$\mathbf{X}_S = (x_3, x_2, x_1)^T; \qquad \mathbf{C}_S^T = (0, 11, 10)$$

Iteration No. 3:
Now the nonbasic vectors are $\mathbf{P}_5$ and $\mathbf{P}_4$.

(*a*) Entering Vector:

$$\mathbf{W} = \mathbf{C}_S^T\mathbf{S}^{-1} = (0, 11, 10)\begin{pmatrix} 1 & -11/21 & 2/21 \\ 0 & 2/7 & -1/7 \\ 0 & -1/21 & 4/21 \end{pmatrix} = (0, 8/3, 1/3)$$

$$(z_5 - c_5, z_4 - c_4) = \mathbf{W}(\mathbf{P}_5, \mathbf{P}_4) - (c_5, c_4) = (0, 8/3, 1/3)\begin{pmatrix} 0 & 0 \\ 0 & 1 \\ 1 & 0 \end{pmatrix} - (0, 0) = (1/3, 8/3)$$

Since all the coefficients are nonnegative, the above step gives the optimal basis. The optimal values of the variables and the objective function are as follows:

$$\begin{pmatrix} x_3 \\ x_2 \\ x_1 \end{pmatrix} = \mathbf{S}^{-1}\mathbf{B} = \begin{pmatrix} 1 & -11/21 & 2/21 \\ 0 & 2/7 & -1/7 \\ 0 & -1/21 & 4/21 \end{pmatrix}\begin{pmatrix} 150 \\ 200 \\ 175 \end{pmatrix} = \begin{pmatrix} 1300/21 \\ 225/7 \\ 500/21 \end{pmatrix}$$

$$z = \mathbf{C}_S^T\mathbf{X}_S = (0, 11, 10)\begin{pmatrix} 1300/21 \\ 225/7 \\ 500/21 \end{pmatrix} = 1775/3$$

5.2 Use the revised simplex method to solve the following problem.

$$\begin{aligned} \text{minimize:}\quad & z = 3x_1 + 2x_2 + 4x_3 + 6x_4 \\ \text{subject to:}\quad & x_1 + 2x_2 + x_3 + x_4 \geq 1000 \\ & 2x_1 + x_2 + 3x_3 + 7x_4 \geq 1500 \\ \text{with:}\quad & \text{all variables nonnegative} \end{aligned}$$

This program is put in standard form by introducing the surplus variables x_5 and x_7, and the artificial variables x_6 and x_8.

$$\begin{aligned} \text{minimize:}\quad & z = 3x_1 + 2x_2 + 4x_3 + 6x_4 + 0x_5 + Mx_6 + 0x_7 + Mx_8 \\ \text{subject to:}\quad & x_1 + 2x_2 + x_3 + x_4 - x_5 + x_6 = 1000 \\ & 2x_1 + x_2 + 3x_3 + 7x_4 - x_7 + x_8 = 1500 \\ \text{with:}\quad & \text{all variables nonnegative} \end{aligned}$$

$$\mathbf{P}_1 = \begin{pmatrix}1\\2\end{pmatrix}, \mathbf{P}_2 = \begin{pmatrix}2\\1\end{pmatrix}, \mathbf{P}_3 = \begin{pmatrix}1\\3\end{pmatrix}, \mathbf{P}_4 = \begin{pmatrix}1\\7\end{pmatrix}, \mathbf{P}_5 = \begin{pmatrix}-1\\0\end{pmatrix}, \mathbf{P}_6 = \begin{pmatrix}1\\0\end{pmatrix}$$

$$\mathbf{P}_7 = \begin{pmatrix}0\\-1\end{pmatrix}, \mathbf{P}_8 = \begin{pmatrix}0\\1\end{pmatrix}, \mathbf{B} = \begin{pmatrix}1000\\1500\end{pmatrix}$$

Initialization:

$$\mathbf{X}_S = (x_6, x_8)^T; \qquad \mathbf{C}_S^T = (M, M)$$

$$\mathbf{S} = (\mathbf{P}_6, \mathbf{P}_8) = \mathbf{I} = \mathbf{S}^{-1} = \begin{pmatrix}1 & 0\\0 & 1\end{pmatrix}$$

Iteration No. 1:
The nonbasic vectors are $\mathbf{P}_1$, $\mathbf{P}_2$, $\mathbf{P}_3$, $\mathbf{P}_4$, $\mathbf{P}_5$, and $\mathbf{P}_7$.

(*a*) Entering Vector:

$$\mathbf{W} = \mathbf{C}_S^T\mathbf{S}^{-1} = (M, M)\mathbf{I} = (M, M)$$

$$\begin{aligned} (c_1 - z_1, c_2 - z_2, c_3 - z_3, c_4 - z_4, c_5 - z_5, c_7 - z_7) &= (c_1, c_2, c_3, c_4, c_5, c_7) - \mathbf{W}(\mathbf{P}_1, \mathbf{P}_2, \mathbf{P}_3, \mathbf{P}_4, \mathbf{P}_5, \mathbf{P}_7) \\ &= (3, 2, 4, 6, 0, 0) - (M, M)\begin{pmatrix}1 & 2 & 1 & 1 & -1 & 0\\2 & 1 & 3 & 7 & 0 & -1\end{pmatrix} \\ &= (-3M + 3, -3M + 2, -4M + 4, -8M + 6, M, M) \end{aligned}$$

Since the most negative coefficient corresponds to $\mathbf{P}_4$, it becomes the entering vector (**E.V.**).

(*b*) Departing Vector:

$$\mathbf{X}_S = \mathbf{S}^{-1}\mathbf{B} = \mathbf{I}\mathbf{B} = \mathbf{B} = \begin{pmatrix}1000\\1500\end{pmatrix}; \qquad t_4 = \mathbf{S}^{-1}\mathbf{P}_4 = \mathbf{I}\mathbf{P}_4 = \mathbf{P}_4 = \begin{pmatrix}1\\7\end{pmatrix}$$

$$\theta = \min\{1000, 1500/7\} = 1500/7$$

Since the minimum ratio corresponds to $\mathbf{P}_8$, it becomes the departing vector (**D.V.**).

(*c*) New Basis:

$$\eta = \begin{pmatrix}\dfrac{-t_{64}}{t_{84}}\\[2ex] \dfrac{1}{t_{84}}\end{pmatrix} = \begin{pmatrix}-1/7\\1/7\end{pmatrix}; \qquad \mathbf{E} = (\mathbf{a}_1, \eta)$$

$$\mathbf{S}_{new}^{-1} = \mathbf{E}\mathbf{S}^{-1} = \mathbf{E}\mathbf{I} = \mathbf{E} = \begin{pmatrix}1 & -1/7\\0 & 1/7\end{pmatrix}$$

Summary of Iteration No. 1:

$$\mathbf{X}_S = (x_6, x_4)^T; \qquad \mathbf{C}_S^T = (M, 6)$$

Iteration No. 2:
Now the nonbasic vectors are $\mathbf{P}_1$, $\mathbf{P}_2$, $\mathbf{P}_3$, $\mathbf{P}_6$, $\mathbf{P}_5$, and $\mathbf{P}_7$.

(*a*) Entering Vector:

$$\mathbf{W} = \mathbf{C}_S^T\mathbf{S}^{-1} = (M, 6)\begin{pmatrix} 1 & -1/7 \\ 0 & 1/7 \end{pmatrix} = (M, 6/7 - M/7)$$

$$\begin{aligned}(c_1 - z_1, c_2 - z_2, c_3 - z_3, c_6 - z_6, c_5 - z_5, c_7 - z_7) &= (c_1, c_2, c_3, c_6, c_5, c_7) - \mathbf{W}(\mathbf{P}_1, \mathbf{P}_2, \mathbf{P}_3, \mathbf{P}_6, \mathbf{P}_5, \mathbf{P}_7) \\ &= (3, 2, 4, M, 0, 0) - (M, 6/7 - M/7) \\ &\quad \times \begin{pmatrix} 1 & 2 & 1 & 0 & -1 & 0 \\ 2 & 1 & 3 & 1 & 0 & -1 \end{pmatrix} \\ &= (-5M/7 + 9/7, -13M/7 + 8/7, -4M/7 + 10/7, \\ &\quad 8M/7 - 6/7, M, -M/7 + 6/7)\end{aligned}$$

Since the most negative coefficient corresponds to $\mathbf{P}_2$, it becomes the entering vector (**E.V.**).

(*b*) Departing Vector:

$$\mathbf{X}_S = \mathbf{S}^{-1}\mathbf{B} = \begin{pmatrix} 1 & -1/7 \\ 0 & 1/7 \end{pmatrix}\begin{pmatrix} 1000 \\ 1500 \end{pmatrix} = (1000 - 1500/7, 1500/7) = (5500/7, 1500/7)$$

$$\mathbf{t}_2 = \mathbf{S}^{-1}\mathbf{P}_2 = \begin{pmatrix} 1 & -1/7 \\ 0 & 1/7 \end{pmatrix}\begin{pmatrix} 2 \\ 1 \end{pmatrix} = \begin{pmatrix} 13/7 \\ 1/7 \end{pmatrix}$$

$$\theta = \min\left\{\frac{5500/7}{13/7}, \frac{1500/7}{1/7}\right\} = \min\left\{\frac{5500}{3}, 1500\right\} = \frac{5500}{3}$$

Since the minimum ratio corresponds to $\mathbf{P}_6$, it becomes the departing vector (**D.V.**).

(*c*) New Basis:

$$\boldsymbol{\eta} = \begin{pmatrix} \dfrac{1}{t_{62}} \\ \dfrac{-t_{42}}{t_{62}} \end{pmatrix} = \begin{pmatrix} \dfrac{1}{13/7} \\ -\dfrac{1/7}{13/7} \end{pmatrix} = \begin{pmatrix} 7/13 \\ -1/13 \end{pmatrix}; \qquad \mathbf{E} = (\boldsymbol{\eta}, \mathbf{u}_2)$$

$$\mathbf{S}_{new}^{-1} = \mathbf{E}\mathbf{S}^{-1} = \begin{pmatrix} 7/13 & 0 \\ -1/13 & 1 \end{pmatrix}\begin{pmatrix} 1 & -1/7 \\ 0 & 1/7 \end{pmatrix} = \begin{pmatrix} 7/13 & -1/13 \\ -1/13 & 2/13 \end{pmatrix}$$

Summary of Iteration No. 2:

$$\mathbf{X}_S = (x_2, x_4)^T; \qquad \mathbf{C}_S^T = (2, 6)$$

Iteration No. 3:
Now the nonbasic vectors are $\mathbf{P}_1$, $\mathbf{P}_6$, $\mathbf{P}_3$, $\mathbf{P}_6$, $\mathbf{P}_5$, and $\mathbf{P}_7$.

(*a*) Entering Vector:

$$\mathbf{W} = \mathbf{C}_S^T\mathbf{S}^{-1} = (2, 6)\begin{pmatrix} 7/13 & -1/13 \\ -1/13 & 2/13 \end{pmatrix} = (8/13, 10/13)$$

$$
\begin{aligned}
(c_1 - z_1, c_6 - z_6, c_3 - z_3, c_8 - z_8, c_5 - z_5, c_7 - z_7) &= (c_1, c_6, c_3, c_8, c_5, c_7) - \mathbf{W}(\mathbf{P}_1, \mathbf{P}_6, \mathbf{P}_3, \mathbf{P}_8, \mathbf{P}_5, \mathbf{P}_7) \\
&= (3, M, 4, M, 0, 0) - (8/13, 10/13) \\
&\quad \times \begin{pmatrix} 1 & 1 & 1 & 0 & -1 & 0 \\ 2 & 0 & 3 & 1 & 0 & -1 \end{pmatrix} \\
&= 11/13, -8/13 + M, 14/13, -10/13 + M, \\
&\quad 8/13, 10/13)
\end{aligned}
$$

Since all the coefficients are nonnegative, the above step gives the optimal basis. The optimal values of the variables and the objective function are as follows:

$$
\begin{pmatrix} x_2 \\ x_4 \end{pmatrix} = \mathbf{S}^{-1}\mathbf{B} = \begin{pmatrix} 7/13 & -1/13 \\ -1/13 & 2/13 \end{pmatrix}\begin{pmatrix} 1000 \\ 1500 \end{pmatrix} = \begin{pmatrix} 5500/13 \\ 2000/13 \end{pmatrix}
$$

$$
z = \mathbf{C}_S^T\mathbf{X}_S = (2, 6)\begin{pmatrix} 5500/13 \\ 2000/13 \end{pmatrix} = 23000/13
$$

5.3 Use the revised simplex method to solve the following problem.

$$
\begin{aligned}
\text{maximize:} \quad & z = 2x_1 + 3x_2 + 4x_3 \\
\text{subject to:} \quad & x_1 + x_2 + x_3 \le 1 \\
& x_1 + x_2 + 2x_3 = 2 \\
& 3x_1 + 2x_2 + x_3 \ge 4 \\
\text{with:} \quad & \text{all variables nonnegative}
\end{aligned}
$$

This program is put in standard form by introducing the slack variable x_4, the surplus variable x_6, and the artificial variables x_5 and x_7.

$$
\begin{aligned}
\text{maximize:} \quad & z = 2x_1 + 3x_2 + 4x_3 + 0x_4 - Mx_5 + 0x_6 - Mx_7 \\
\text{subject to:} \quad & x_1 + x_2 + x_3 + x_4 = 1 \\
& x_1 + x_2 + 2x_3 + x_5 = 2 \\
& 3x_1 + 2x_2 + x_3 - x_6 + x_7 = 4 \\
\text{with:} \quad & \text{all variables nonnegative}
\end{aligned}
$$

$$
\mathbf{P}_1 = \begin{pmatrix} 1 \\ 1 \\ 3 \end{pmatrix}, \mathbf{P}_2 = \begin{pmatrix} 1 \\ 1 \\ 2 \end{pmatrix}, \mathbf{P}_3 = \begin{pmatrix} 1 \\ 2 \\ 1 \end{pmatrix}, \mathbf{P}_4 = \begin{pmatrix} 1 \\ 0 \\ 0 \end{pmatrix}, \mathbf{P}_5 = \begin{pmatrix} 0 \\ 1 \\ 0 \end{pmatrix}, \mathbf{P}_6 = \begin{pmatrix} 0 \\ 0 \\ -1 \end{pmatrix}, \mathbf{P}_7 = \begin{pmatrix} 0 \\ 0 \\ 1 \end{pmatrix},
$$

$$
\mathbf{B} = \begin{pmatrix} 1 \\ 2 \\ 4 \end{pmatrix}
$$

Initialization:

$$
\mathbf{X}_S = (x_4, x_5, x_7)^T; \qquad \mathbf{C}_S^T = (0, -M, -M); \qquad \mathbf{S} = (\mathbf{P}_4, \mathbf{P}_5, \mathbf{P}_7) = \mathbf{I} = \mathbf{S}^{-1} = \begin{pmatrix} 1 & 0 & 0 \\ 0 & 1 & 0 \\ 0 & 0 & 1 \end{pmatrix}
$$

Iteration No. 1:
The nonbasic vectors are $\mathbf{P}_1$, $\mathbf{P}_2$, $\mathbf{P}_3$, and $\mathbf{P}_6$.

(*a*) Entering Vector:

$$\mathbf{W} = \mathbf{C}_S^T\mathbf{S}^{-1} = (0, -M, -M)\mathbf{I} = (0, -M, -M)$$

$$(z_1 - c_1, z_2 - c_2, z_3 - c_3, z_6 - c_6) = \mathbf{W}(\mathbf{P}_1, \mathbf{P}_2, \mathbf{P}_3, \mathbf{P}_6) - (c_1, c_2, c_3, c_6) = (0, -M, -M)\begin{pmatrix} 1 & 1 & 1 & 0 \\ 1 & 1 & 2 & 0 \\ 3 & 2 & 1 & -1 \end{pmatrix}$$

$$- (2, 3, 4, 0)$$

$$= (-4M - 2, -3M - 3, -3M - 4, M)$$

Since the most negative coefficient corresponds to $\mathbf{P}_1$, it becomes the entering vector (**E.V.**).

(*b*) Departing Vector:

$$\mathbf{X}_S = \mathbf{S}^{-1}\mathbf{B} = \mathbf{IB} = \mathbf{B} = \begin{pmatrix} 1 \\ 2 \\ 4 \end{pmatrix}; \qquad \mathbf{t}_1 = \mathbf{S}^{-1}\mathbf{P}_1 = \mathbf{IP}_1 = \mathbf{P}_1 = \begin{pmatrix} 1 \\ 1 \\ 3 \end{pmatrix}$$

$$\theta = \min\{1/1, 2/1, 4/3\} = 1$$

Since the minimum ratio corresponds to $\mathbf{P}_4$, it becomes the departing vector (**D.V.**).

(*c*) New Basis:

$$\boldsymbol{\eta} = \begin{pmatrix} \dfrac{1}{t_{41}} \\ \dfrac{-t_{51}}{t_{41}} \\ \dfrac{-t_{71}}{t_{41}} \end{pmatrix} = \begin{pmatrix} 1/1 \\ -1/1 \\ -3/1 \end{pmatrix} = \begin{pmatrix} 1 \\ -1 \\ -3 \end{pmatrix}; \qquad \mathbf{E} = (\boldsymbol{\eta}, \mathbf{u}_2, \mathbf{u}_3)$$

$$\mathbf{S}_{\text{new}}^{-1} = \mathbf{ES}^{-1} = \mathbf{EI} = \mathbf{E} = \begin{pmatrix} 1 & 0 & 0 \\ -1 & 1 & 0 \\ -3 & 0 & 1 \end{pmatrix}$$

Summary of Iteration No. 1:

$$\mathbf{X}_S = (x_1, x_5, x_7)^T; \qquad \mathbf{C}_S^T = (2, -M, -M)$$

Iteration No. 2:
Now the nonbasic vectors are $\mathbf{P}_4$, $\mathbf{P}_2$, $\mathbf{P}_3$, and $\mathbf{P}_6$.

(*a*) Entering Vector:

$$\mathbf{W} = \mathbf{C}_S^T\mathbf{S}^{-1} = (2, -M, -M)\begin{pmatrix} 1 & 0 & 0 \\ -1 & 1 & 0 \\ -3 & 0 & 1 \end{pmatrix} = (2 + 4M, -M, -M)$$

$$(z_4 - c_4, z_2 - c_2, z_3 - c_3, z_6 - c_6) = \mathbf{W}(\mathbf{P}_4, \mathbf{P}_2, \mathbf{P}_3, \mathbf{P}_6) - (c_4, c_2, c_3, c_6)$$

$$= (2 + 4M, -M, -M)\begin{pmatrix} 1 & 1 & 1 & 0 \\ 0 & 1 & 2 & 0 \\ 0 & 2 & 1 & -1 \end{pmatrix} - (0, 3, 4, 0)$$

$$= (4M + 2, M - 1, M - 2, M)$$

Since all the coefficients are nonnegative, the above step gives the optimal basis. The optimal values of the

variables are as follows:

$$\begin{pmatrix} x_1 \\ x_5 \\ x_7 \end{pmatrix} = \mathbf{S}^{-1}\mathbf{B} = \begin{pmatrix} 1 & 0 & 0 \\ -1 & 1 & 0 \\ -3 & 0 & 1 \end{pmatrix}\begin{pmatrix} 1 \\ 2 \\ 4 \end{pmatrix} = \begin{pmatrix} 1 \\ 1 \\ 1 \end{pmatrix}$$

Since the optimum solution includes artificial variables x_5 and x_7 at positive values ($x_5 = 1$, $x_7 = 1$), there is no feasible solution.

5.4 Use the revised simplex method to solve the following problem.

$$\begin{aligned} \text{maximize:} \quad & z = 2x_1 + x_2 \\ \text{subject to:} \quad & x_1 + x_2 \le 3 \\ & 2x_1 + x_2 \le 5 \\ & x_1 + 3x_2 \le 6 \\ \text{with:} \quad & x_1 \text{ and } x_2 \text{ nonnegative} \end{aligned}$$

This program is put in standard form by introducing the slack variables x_3, x_4, and x_5.

$$\begin{aligned} \text{maximize:} \quad & z = 2x_1 + x_2 + 0x_3 + 0x_4 + 0x_5 \\ \text{subject to:} \quad & x_1 + x_2 + x_3 = 3 \\ & 2x_1 + x_2 + x_4 = 5 \\ & x_1 + 3x_2 + x_5 = 6 \\ \text{with:} \quad & \text{all variables nonnegative} \end{aligned}$$

$$\mathbf{P}_1 = \begin{pmatrix} 1 \\ 2 \\ 1 \end{pmatrix}, \mathbf{P}_2 = \begin{pmatrix} 1 \\ 1 \\ 3 \end{pmatrix}, \mathbf{P}_3 = \begin{pmatrix} 1 \\ 0 \\ 0 \end{pmatrix}, \mathbf{P}_4 = \begin{pmatrix} 0 \\ 1 \\ 0 \end{pmatrix}, \mathbf{P}_5 = \begin{pmatrix} 0 \\ 0 \\ 1 \end{pmatrix}, \mathbf{B} = \begin{pmatrix} 3 \\ 5 \\ 6 \end{pmatrix}$$

Initialization:

$$\mathbf{X}_S = (x_3, x_4, x_5)^T; \qquad \mathbf{C}_S^T = (0, 0, 0)$$

$$\mathbf{S} = (\mathbf{P}_3, \mathbf{P}_4, \mathbf{P}_5) = \mathbf{I} = \mathbf{S}^{-1} = \begin{pmatrix} 1 & 0 & 0 \\ 0 & 1 & 0 \\ 0 & 0 & 1 \end{pmatrix}$$

Iteration No. 1:
The nonbasic vectors are $\mathbf{P}_1$ and $\mathbf{P}_2$.

(*a*) Entering Vector:

$$\mathbf{W} = \mathbf{C}_S^T\mathbf{S}^{-1} = (0, 0, 0)\mathbf{I} = (0, 0, 0)$$

$$(z_1 - c_1, z_2 - c_2) = \mathbf{W}(\mathbf{P}_1, \mathbf{P}_2) - (c_1, c_2) = (0, 0, 0)\begin{pmatrix} 1 & 1 \\ 2 & 1 \\ 1 & 3 \end{pmatrix} - (2, 1) = (-2, -1)$$

Since the most negative coefficient corresponds to $\mathbf{P}_1$, it becomes the entering vector (**E.V.**).

(*b*) Departing Vector:

$$\mathbf{X}_S = \mathbf{S}^{-1}\mathbf{B} = \mathbf{I}\mathbf{B} = \mathbf{B} = \begin{pmatrix} 3 \\ 5 \\ 6 \end{pmatrix}; \qquad \mathbf{t}_1 = \mathbf{S}^{-1}\mathbf{P}_1 = \mathbf{I}\mathbf{P}_1 = \mathbf{P}_1 = \begin{pmatrix} 1 \\ 2 \\ 1 \end{pmatrix}$$

$$\theta = \min\left\{\frac{3}{1}, \frac{5}{2}, \frac{6}{1}\right\} = \frac{5}{2}$$

Since the minimum ratio corresponds to $\mathbf{P}_4$, it becomes the departing vector (**D.V.**).

(*c*) New Basis:

$$\boldsymbol{\eta} = \begin{pmatrix} \dfrac{-t_{31}}{t_{41}} \\ \dfrac{1}{t_{41}} \\ \dfrac{-t_{51}}{t_{41}} \end{pmatrix} = \begin{pmatrix} -1/2 \\ 1/2 \\ -1/2 \end{pmatrix}; \qquad \mathbf{E} = (\mathbf{u}_1, \boldsymbol{\eta}, \mathbf{u}_3)$$

$$\mathbf{S}_{\text{new}}^{-1} = \mathbf{E}\mathbf{S}^{-1} = \mathbf{E}\mathbf{I} = \mathbf{E} = \begin{pmatrix} 1 & -1/2 & 0 \\ 0 & 1/2 & 0 \\ 0 & -1/2 & 1 \end{pmatrix}$$

Summary of Iteration No. 1:

$$\mathbf{X}_S = (x_3, x_1, x_5)^T; \qquad \mathbf{C}_S^T = (0, 2, 0)$$

Iteration No. 2:
Now the nonbasic vectors are $\mathbf{P}_4$ and $\mathbf{P}_2$.

(*a*) Entering Vector:

$$\mathbf{W} = \mathbf{C}_S^T\mathbf{S}^{-1} = (0, 2, 0)\begin{pmatrix} 1 & -1/2 & 0 \\ 0 & 1/2 & 0 \\ 0 & -1/2 & 1 \end{pmatrix} = (0, 1, 0)$$

$$(z_4 - c_4, z_2 - c_2) = \mathbf{W}(\mathbf{P}_4, \mathbf{P}_2) - (c_4, c_2) = (0, 1, 0)\begin{pmatrix} 0 & 1 \\ 1 & 1 \\ 0 & 3 \end{pmatrix} - (0, 1) = (1, 0)$$

Since all the coefficients are nonnegative, the above step gives the optimal basis. The optimal values of the variables and the objective function are as follows:

$$\begin{pmatrix} x_3 \\ x_1 \\ x_5 \end{pmatrix} = \mathbf{S}^{-1}\mathbf{B} = \begin{pmatrix} 1 & -1/2 & 0 \\ 0 & 1/2 & 0 \\ 0 & -1/2 & 1 \end{pmatrix}\begin{pmatrix} 3 \\ 5 \\ 6 \end{pmatrix} = \begin{pmatrix} 1/2 \\ 5/2 \\ 7/2 \end{pmatrix}; \qquad z = \mathbf{C}_S^T\mathbf{X}_S = (0, 2, 0)\begin{pmatrix} 1/2 \\ 5/2 \\ 7/2 \end{pmatrix} = 5$$

5.5 Use the revised simplex method to solve the following problem.

$$\begin{aligned} \text{minimize:} \quad & z = x_1 + x_2 \\ \text{subject to:} \quad & x_1 + 3x_2 \le 12 \\ & 3x_1 + x_2 \ge 13 \\ & x_1 - x_2 = 3 \\ \text{with:} \quad & x_1 \text{ and } x_2 \text{ nonnegative} \end{aligned}$$

This program is put in standard form by introducing the slack variable x_3, the surplus variable x_4, and the artificial variables x_5 and x_6.

$$\begin{aligned}
\text{minimize:}\quad & z = x_1 + x_2 + 0x_3 + 0x_4 + Mx_5 + Mx_6 \\
\text{subject to:}\quad & x_1 + 3x_2 + x_3 = 12 \\
& 3x_1 + x_2 - x_4 + x_5 = 13 \\
& x_1 - x_2 + x_6 = 3 \\
\text{with:}\quad & \text{all variables nonnegative}
\end{aligned}$$

$$\mathbf{P}_1 = \begin{pmatrix} 1 \\ 3 \\ 1 \end{pmatrix}, \mathbf{P}_2 = \begin{pmatrix} 3 \\ 1 \\ -1 \end{pmatrix}, \mathbf{P}_3 = \begin{pmatrix} 1 \\ 0 \\ 0 \end{pmatrix}, \mathbf{P}_4 = \begin{pmatrix} 0 \\ -1 \\ 0 \end{pmatrix}, \mathbf{P}_5 = \begin{pmatrix} 0 \\ 1 \\ 0 \end{pmatrix}, \mathbf{P}_6 = \begin{pmatrix} 0 \\ 0 \\ 1 \end{pmatrix}, \mathbf{B} = \begin{pmatrix} 12 \\ 13 \\ 3 \end{pmatrix},$$

Initialization:

$$\mathbf{X}_S = (x_3, x_5, x_6)^T; \qquad \mathbf{C}_S^T = (0, M, M)$$

$$\mathbf{S} = (\mathbf{P}_3, \mathbf{P}_5, \mathbf{P}_6) = \mathbf{I} = \mathbf{S}^{-1} = \begin{pmatrix} 1 & 0 & 0 \\ 0 & 1 & 0 \\ 0 & 0 & 1 \end{pmatrix}$$

Iteration No. 1:
The nonbasic vectors are $\mathbf{P}_1$, $\mathbf{P}_2$, and $\mathbf{P}_4$.

(*a*) Entering Vector:

$$W = \mathbf{C}_S^T\mathbf{S}^{-1} = (0, M, M)\mathbf{I} = (0, M, M)$$

$$(c_1 - z_1, c_2 - z_2, c_4 - z_4) = (c_1, c_2, c_4) - \mathbf{W}(\mathbf{P}_1, \mathbf{P}_2, \mathbf{P}_4) = (1, 1, 0) - (0, M, M)\begin{pmatrix} 1 & 3 & 0 \\ 3 & 1 & -1 \\ 1 & -1 & 0 \end{pmatrix}$$

$$= (-4M + 1, -2M + 1, M)$$

Since the most negative coefficient corresponds to $\mathbf{P}_1$, it becomes the entering vector (**E.V.**).

(*b*) Departing Vector:

$$\mathbf{X}_S = \mathbf{S}^{-1}\mathbf{B} = \mathbf{IB} = \mathbf{B} = \begin{pmatrix} 12 \\ 13 \\ 3 \end{pmatrix}; \qquad \mathbf{t}_1 = \mathbf{S}^{-1}\mathbf{P}_1 = \mathbf{IP}_1 = \mathbf{P}_1 = \begin{pmatrix} 1 \\ 3 \\ 1 \end{pmatrix}$$

$$\theta = \min\left\{\frac{12}{1}, \frac{13}{3}, \frac{3}{1}\right\} = 3$$

Since the minimum ratio corresponds to $\mathbf{P}_6$, it becomes the departing vector (**D.V.**).

(*c*) New Basis:

$$\boldsymbol{\eta} = \begin{pmatrix} \dfrac{-t_{31}}{t_{61}} \\ \dfrac{-t_{51}}{t_{61}} \\ \dfrac{1}{t_{61}} \end{pmatrix} = \begin{pmatrix} -\dfrac{1}{1} \\ -\dfrac{3}{1} \\ \dfrac{1}{1} \end{pmatrix} = \begin{pmatrix} -1 \\ -3 \\ 1 \end{pmatrix}; \qquad \mathbf{E} = (\mathbf{u}_1, \mathbf{u}_2, \boldsymbol{\eta})$$

$$\mathbf{S}_{new}^{-1} = \mathbf{ES}^{-1} = \mathbf{EI} = \mathbf{E} = \begin{pmatrix} 1 & 0 & -1 \\ 0 & 1 & -3 \\ 0 & 0 & 1 \end{pmatrix}$$

Summary of Iteration No. 1:

$$\mathbf{X}_S = (x_3, x_5, x_1)^T; \qquad \mathbf{C}_S^T = (0, M, 1)$$

Iteration No. 2:
Now the nonbasic vectors are $\mathbf{P}_6$, $\mathbf{P}_2$ and $\mathbf{P}_4$.

(*a*) Entering Vector:

$$\mathbf{W} = \mathbf{C}_S^T\mathbf{S}^{-1} = (0, M, 1)\begin{pmatrix} 1 & 0 & -1 \\ 0 & 1 & -3 \\ 0 & 0 & 1 \end{pmatrix} = (0, M, 1 - 3M)$$

$$(c_6 - z_6, c_2 - z_2, c_4 - z_4) = (c_6, c_2, c_4) - \mathbf{W}(\mathbf{P}_6, \mathbf{P}_2, \mathbf{P}_4) = (M, 1, 0) - (0, M, 1 - 3M)\begin{pmatrix} 0 & 3 & 0 \\ 0 & 1 & -1 \\ 1 & -1 & 0 \end{pmatrix}$$

$$= (4M - 1, -4M + 2, M)$$

Since the most negative coefficient corresponds to $\mathbf{P}_2$, it becomes the entering vector (**E.V.**).

(*b*) Departing Vector:

$$\mathbf{X}_S = \mathbf{S}^{-1}\mathbf{B} = \begin{pmatrix} 1 & 0 & -1 \\ 0 & 1 & -3 \\ 0 & 0 & 1 \end{pmatrix}\begin{pmatrix} 12 \\ 13 \\ 3 \end{pmatrix} = \begin{pmatrix} 9 \\ 4 \\ 3 \end{pmatrix}; \qquad \mathbf{t}_2 = \mathbf{S}^{-1}\mathbf{P}_2 = \begin{pmatrix} 1 & 0 & -1 \\ 0 & 1 & -3 \\ 0 & 0 & 1 \end{pmatrix}\begin{pmatrix} 3 \\ 1 \\ -1 \end{pmatrix} = \begin{pmatrix} 4 \\ 4 \\ -1 \end{pmatrix}$$

$$\theta = \min\left\{\frac{9}{4}, \frac{4}{4}, -\right\} = 1$$

Since the minimum ratio corresponds to $\mathbf{P}_5$, it becomes the departing vector (**D.V.**).

(*c*) New Basis:

$$\boldsymbol{\eta} = \begin{pmatrix} \dfrac{-t_{32}}{t_{52}} \\ \dfrac{1}{t_{52}} \\ \dfrac{-t_{12}}{t_{52}} \end{pmatrix} = \begin{pmatrix} -4/4 \\ 1/4 \\ 1/4 \end{pmatrix} = \begin{pmatrix} -1 \\ 1/4 \\ 1/4 \end{pmatrix}; \qquad \mathbf{S}_{\text{new}}^{-1} = \begin{pmatrix} 1 & -1 & 0 \\ 0 & 1/4 & 0 \\ 0 & 1/4 & 1 \end{pmatrix}\begin{pmatrix} 1 & 0 & -1 \\ 0 & 1 & -3 \\ 0 & 0 & 1 \end{pmatrix} = \begin{pmatrix} 1 & -1 & 2 \\ 0 & 1/4 & -3/4 \\ 0 & 1/4 & 1/4 \end{pmatrix}$$

Summary of Iteration No. 2:

$$\mathbf{X}_S = (x_3, x_2, x_1)^T; \qquad \mathbf{C}_S^T = (0, 1, 1)$$

Iteration No. 3:
Now the nonbasic vectors are $\mathbf{P}_6$, $\mathbf{P}_5$ and $\mathbf{P}_4$.

(*a*) Entering Vector:

$$\mathbf{W} = \mathbf{C}_S^T\mathbf{S}^{-1} = (0, 1, 1)\begin{pmatrix} 1 & -1 & 2 \\ 0 & 1/4 & -3/4 \\ 0 & 1/4 & 1/4 \end{pmatrix} = (0, 1/2, -1/2)$$

$$(c_6 - z_6, c_5 - z_5, c_4 - z_4) = (c_6, c_5, c_4) - \mathbf{W}(\mathbf{P}_6, \mathbf{P}_5, \mathbf{P}_4)$$

$$= (M, M, 0) - (0, 1/2, -1/2)\begin{pmatrix} 0 & 0 & 0 \\ 0 & 1 & -1 \\ 1 & 0 & 0 \end{pmatrix} = (1/2 + M, -1/2 + M, 1/2)$$

Since all the coefficients are nonnegative, the above step gives the optimal basis. The optimal values of the

variables and the objective function are as follows:

$$\begin{pmatrix} x_3 \\ x_2 \\ x_1 \end{pmatrix} = \mathbf{S}^{-1}\mathbf{B} = \begin{pmatrix} 1 & -1 & 2 \\ 0 & 1/4 & -3/4 \\ 0 & 1/4 & 1/4 \end{pmatrix}\begin{pmatrix} 12 \\ 13 \\ 3 \end{pmatrix} = \begin{pmatrix} 5 \\ 1 \\ 4 \end{pmatrix}; \qquad z = \mathbf{C}_S^T\mathbf{X}_S = (0, 1, 1)\begin{pmatrix} 5 \\ 1 \\ 4 \end{pmatrix} = 5$$

5.6 Use the revised simplex method to solve the following problem.

$$\begin{aligned} \text{maximize:} \quad & z = 7x_1 + 2x_2 + 3x_3 + x_4 \\ \text{subject to:} \quad & 2x_1 + 7x_2 = 7 \\ & 5x_1 + 8x_2 + 2x_4 = 10 \\ & x_1 + x_3 = 11 \\ \text{with:} \quad & \text{all variables nonnegative} \end{aligned}$$

This program is put in standard form by introducing the artificial variables x_5, x_6, and x_7.

$$\begin{aligned} \text{maximize:} \quad & z = 7x_1 + 2x_2 + 3x_3 + x_4 - Mx_5 - Mx_6 - Mx_7 \\ \text{subject to:} \quad & 2x_1 + 7x_2 + x_5 = 7 \\ & 5x_1 + 8x_2 + 2x_4 + x_6 = 10 \\ & x_1 + x_3 + x_7 = 11 \\ \text{with:} \quad & \text{all variables nonnegative} \end{aligned}$$

$$\mathbf{P}_1 = \begin{pmatrix} 2 \\ 5 \\ 1 \end{pmatrix}, \mathbf{P}_2 = \begin{pmatrix} 7 \\ 8 \\ 0 \end{pmatrix}, \mathbf{P}_3 = \begin{pmatrix} 0 \\ 0 \\ 1 \end{pmatrix}, \mathbf{P}_4 = \begin{pmatrix} 0 \\ 2 \\ 0 \end{pmatrix}, \mathbf{P}_5 = \begin{pmatrix} 1 \\ 0 \\ 0 \end{pmatrix}, \mathbf{P}_6 = \begin{pmatrix} 0 \\ 1 \\ 0 \end{pmatrix}, \mathbf{P}_7 = \begin{pmatrix} 0 \\ 0 \\ 1 \end{pmatrix}, \mathbf{B} = \begin{pmatrix} 7 \\ 10 \\ 11 \end{pmatrix}$$

Initialization:

$$\mathbf{X}_S = (x_5, x_6, x_7)^T; \qquad \mathbf{C}_S^T = (-M, -M, -M); \qquad \mathbf{S} = (\mathbf{P}_5, \mathbf{P}_6, \mathbf{P}_7) = \mathbf{I} = \mathbf{S}^{-1} = \begin{pmatrix} 1 & 0 & 0 \\ 0 & 1 & 0 \\ 0 & 0 & 1 \end{pmatrix}$$

Iteration No. 1:
The nonbasic vectors are $\mathbf{P}_1$, $\mathbf{P}_2$, $\mathbf{P}_3$, and $\mathbf{P}_4$.

(*a*) Entering Vector:

$$\mathbf{W} = \mathbf{C}_S^T\mathbf{S}^{-1} = (-M, -M, -M)\mathbf{I} = (-M, -M, -M)$$

$$\begin{aligned} (z_1 - c_1, z_2 - c_2, z_3 - c_3, z_4 - c_4) &= \mathbf{W}(\mathbf{P}_1, \mathbf{P}_2, \mathbf{P}_3, \mathbf{P}_4) - (c_1, c_2, c_3, c_4) \\ &= (-M, -M, -M)\begin{pmatrix} 2 & 7 & 0 & 0 \\ 5 & 8 & 0 & 2 \\ 1 & 0 & 1 & 0 \end{pmatrix} - (7, 2, 3, 1) \\ &= (-8M - 7, -15M - 2, -M - 3, -2M - 1) \end{aligned}$$

Since the most negative coefficient corresponds to $\mathbf{P}_2$, it becomes the entering vector (E.V.).

(*b*) Departing Vector:

$$\mathbf{X}_S = \mathbf{S}^{-1}\mathbf{B} = \mathbf{I}\mathbf{B} = \mathbf{B} = \begin{pmatrix} 7 \\ 10 \\ 11 \end{pmatrix}$$

Copyrighted material

$$\mathbf{t}_2 = \mathbf{S}^{-1}\mathbf{P}_2 = \mathbf{I}\mathbf{P}_2 = \mathbf{P}_2 = \begin{pmatrix} 7 \\ 8 \\ 0 \end{pmatrix}$$

$$\theta = \min\left\{\frac{7}{7}, \frac{10}{8}, -\right\} = 1$$

Since the minimum ratio corresponds to $\mathbf{P}_5$, it becomes the departing vector (**D.V.**).

(*c*) New Basis:

$$\boldsymbol{\eta} = \begin{pmatrix} \dfrac{1}{t_{52}} \\ \dfrac{-t_{62}}{t_{52}} \\ \dfrac{-t_{72}}{t_{52}} \end{pmatrix} = \begin{pmatrix} \dfrac{1}{7} \\ -\dfrac{8}{7} \\ \dfrac{0}{7} \end{pmatrix} = \begin{pmatrix} \dfrac{1}{7} \\ -\dfrac{8}{7} \\ 0 \end{pmatrix}; \qquad \mathbf{E} = (\boldsymbol{\eta}, \mathbf{u}_2, \mathbf{u}_3)$$

Summary of Iteration No. 1:

$$\mathbf{X}_S = (x_2, x_6, x_7)^T; \qquad \mathbf{C}_S^T = (2, -M, -M)$$

Iteration No. 2:
Now the nonbasic vectors are $\mathbf{P}_1$, $\mathbf{P}_5$, $\mathbf{P}_3$, and $\mathbf{P}_4$.

(*a*) Entering Vector:

$$\mathbf{W} = \mathbf{C}_S^T\mathbf{S}^{-1} = (2, -M, -M)\begin{pmatrix} 1/7 & 0 & 0 \\ -8/7 & 1 & 0 \\ 0 & 0 & 1 \end{pmatrix} = \left(\frac{2+8M}{7}, -M, -M\right)$$

$$\begin{aligned}(z_1 - c_1, z_5 - c_5, z_3 - c_3, z_4 - c_4) &= \mathbf{W}(\mathbf{P}_1, \mathbf{P}_5, \mathbf{P}_3, \mathbf{P}_4) - (c_1, c_5, c_3, c_4) \\ &= \left(\frac{2+8M}{7}, -M, -M\right)\begin{pmatrix} 2 & 1 & 0 & 0 \\ 5 & 0 & 0 & 2 \\ 1 & 0 & 1 & 0 \end{pmatrix} - (7, -M, 3, 1) \\ &= (-45/7 - 26M/7, 2/7 + 15M/7, -M - 3, -2M - 1)\end{aligned}$$

Since the most negative coefficient corresponds to $\mathbf{P}_1$, it becomes the entering vector (**E.V.**).

(*b*) Departing Vector:

$$\mathbf{X}_S = \mathbf{S}^{-1}\mathbf{B} = \begin{pmatrix} 1/7 & 0 & 0 \\ -8/7 & 1 & 0 \\ 0 & 0 & 1 \end{pmatrix}\begin{pmatrix} 7 \\ 10 \\ 11 \end{pmatrix} = \begin{pmatrix} 1 \\ 2 \\ 11 \end{pmatrix}; \qquad \mathbf{t}_1 = \mathbf{S}^{-1}\mathbf{P}_1 = \begin{pmatrix} 1/7 & 0 & 0 \\ -8/7 & 1 & 0 \\ 0 & 0 & 1 \end{pmatrix}\begin{pmatrix} 2 \\ 5 \\ 1 \end{pmatrix} = \begin{pmatrix} 2/7 \\ 19/7 \\ 1 \end{pmatrix}$$

$$\theta = \min\left\{\frac{1}{2/7}, \frac{2}{19/7}, \frac{11}{1}\right\} = \frac{14}{19}$$

Since the minimum ratio corresponds to $\mathbf{P}_6$, it becomes the departing vector (**D.V.**).

(*c*) New Basis:

$$\boldsymbol{\eta} = \begin{pmatrix} \dfrac{-t_{21}}{t_{61}} \\ \dfrac{1}{t_{61}} \\ \dfrac{-t_{71}}{t_{61}} \end{pmatrix} = \begin{pmatrix} \dfrac{-2/7}{19/7} \\ \dfrac{1}{19/7} \\ \dfrac{-1}{19/7} \end{pmatrix} = \begin{pmatrix} -\dfrac{2}{19} \\ \dfrac{7}{19} \\ -\dfrac{7}{19} \end{pmatrix}; \qquad \mathbf{E} = (\mathbf{u}_1, \boldsymbol{\eta}, \mathbf{u}_3)$$

$$\mathbf{S}_{new}^{-1} = \mathbf{E}\mathbf{S}^{-1} = \begin{pmatrix} 1 & -2/19 & 0 \\ 0 & 7/19 & 0 \\ 0 & -7/19 & 1 \end{pmatrix}\begin{pmatrix} 1/7 & 0 & 0 \\ -8/7 & 1 & 0 \\ 0 & 0 & 1 \end{pmatrix} = \begin{pmatrix} 35/133 & -2/19 & 0 \\ -8/19 & 7/19 & 0 \\ 8/19 & -7/19 & 1 \end{pmatrix}$$

Summary of Iteration No. 2:

$$\mathbf{X}_S = (x_2, x_1, x_7)^T; \qquad \mathbf{C}_S^T = (2, 7, -M)$$

Iteration No. 3:
Now the nonbasic vectors are $\mathbf{P}_6$, $\mathbf{P}_5$, $\mathbf{P}_3$, and $\mathbf{P}_4$.

(*a*) Entering Vector:

$$\mathbf{W} = \mathbf{C}_S^T\mathbf{S}^{-1} = (2, 7, -M)\begin{pmatrix} 35/133 & -2/19 & 0 \\ -8/19 & 7/19 & 0 \\ 8/19 & -7/19 & 1 \end{pmatrix} = (-8M/19 - 322/133, 45/19 + 7M/19, -M)$$

$$\begin{aligned}(z_6 - c_6, z_5 - c_5, z_3 - c_3, z_4 - c_4) &= \mathbf{W}(\mathbf{P}_6, \mathbf{P}_5, \mathbf{P}_3, \mathbf{P}_4) - (c_6, c_5, c_3, c_4) \\ &= (-8M/19 - 322/133, 45/19 + 7M/19, -M)\begin{pmatrix} 0 & 1 & 0 & 0 \\ 1 & 0 & 0 & 2 \\ 0 & 0 & 1 & 0 \end{pmatrix} \\ &\quad - (-M, -M, 3, 1) \\ &= (45/19 + 26M/19, 11M/19 - 322/19, -M - 3, 71/19 + 14M/19)\end{aligned}$$

Since the most negative coefficient corresponds to $\mathbf{P}_3$, it becomes the entering vector (**E.V.**).

(*b*) Departing Vector:

$$\mathbf{X}_S = \mathbf{S}^{-1}\mathbf{B} = \begin{pmatrix} 35/133 & -2/19 & 0 \\ -8/19 & 7/19 & 0 \\ 8/19 & -7/19 & 1 \end{pmatrix}\begin{pmatrix} 7 \\ 10 \\ 11 \end{pmatrix} = \begin{pmatrix} 105/133 \\ 14/19 \\ 195/19 \end{pmatrix}$$

$$\mathbf{t}_3 = \begin{pmatrix} 35/133 & -2/19 & 0 \\ -8/19 & 7/19 & 0 \\ 8/19 & -7/19 & 1 \end{pmatrix}\begin{pmatrix} 0 \\ 0 \\ 1 \end{pmatrix} = \begin{pmatrix} 0 \\ 0 \\ 1 \end{pmatrix}$$

$$\theta = \min\left\{-, -, \frac{195/19}{1}\right\} = \frac{195}{19}$$

Since the minimum ratio corresponds to $\mathbf{P}_7$, it becomes the departing vector (**D.V.**).

(*c*) New Basis:

$$\eta = \begin{pmatrix} \dfrac{-t_{23}}{t_{73}} \\ \dfrac{-t_{13}}{t_{73}} \\ \dfrac{1}{t_{73}} \end{pmatrix} = \begin{pmatrix} -\dfrac{0}{1} \\ -\dfrac{0}{1} \\ \dfrac{1}{1} \end{pmatrix} = \begin{pmatrix} 0 \\ 0 \\ 1 \end{pmatrix}; \qquad \mathbf{E} = (\mathbf{u}_1, \mathbf{u}_2, \eta)$$

$$\mathbf{S}_{new}^{-1} = \mathbf{E}\mathbf{S}^{-1} = \begin{pmatrix} 1 & 0 & 0 \\ 0 & 1 & 0 \\ 0 & 0 & 1 \end{pmatrix}\begin{pmatrix} 35/133 & -2/19 & 0 \\ -8/19 & 7/19 & 0 \\ 8/19 & -7/19 & 1 \end{pmatrix} = \begin{pmatrix} 35/133 & -2/19 & 0 \\ -8/19 & 7/19 & 0 \\ 8/19 & -7/19 & 1 \end{pmatrix}$$

Summary of Iteration No. 3:

$$\mathbf{X}_S = (x_2, x_1, x_3)^T; \qquad \mathbf{C}_S^T = (2, 7, 3)$$

Iteration No. 4:
Now the nonbasic vectors are $\mathbf{P}_6$, $\mathbf{P}_5$, $\mathbf{P}_7$, and $\mathbf{P}_4$.

(*a*) Entering Vector:

$$\mathbf{W} = \mathbf{C}_S^T\mathbf{S}^{-1} = (2, 7, 3)\begin{pmatrix} 3/133 & -2/19 & 0 \\ -8/19 & 7/19 & 0 \\ 8/19 & -7/19 & 1 \end{pmatrix} = (-218/133, 24/19, 3)$$

$$(z_6 - c_6, z_5 - c_5, z_7 - c_7, z_4 - c_4) = \mathbf{W}(\mathbf{P}_6, \mathbf{P}_5, \mathbf{P}_7, \mathbf{P}_4) - (c_6, c_5, c_7)$$

$$= (-218/133, 24/19, 3)\begin{pmatrix} 0 & 1 & 0 & 0 \\ 1 & 0 & 0 & 2 \\ 0 & 0 & 1 & 0 \end{pmatrix} - (-M, -M, -M, 1)$$

$$= (M + 24/19, M - 218/133, M + 3, 29/19)$$

Since all the coefficients are nonnegative, the above step gives the optimal basis. The optimal values of the variables and the objective function are as follows:

$$\begin{pmatrix} x_2 \\ x_1 \\ x_3 \end{pmatrix} = \mathbf{S}^{-1}\mathbf{B} = \begin{pmatrix} 35/133 & -2/19 & 0 \\ -8/19 & 7/19 & 0 \\ 8/19 & -7/19 & 1 \end{pmatrix}\begin{pmatrix} 7 \\ 10 \\ 11 \end{pmatrix} = \begin{pmatrix} .7895 \\ .7368 \\ 10.2632 \end{pmatrix}$$

$$z = \mathbf{C}_S^T\mathbf{X}_S = (2, 7, 3)\begin{pmatrix} .7895 \\ .7368 \\ 10.2632 \end{pmatrix} = 37.5262$$

5.7 Carry out the first two iterations of Karmarkar's algorithm for the following problem.

$$\begin{aligned} \text{minimize:} \quad & z = 2x_2 - x_3 \\ \text{subject to:} \quad & x_1 - 2x_2 + x_3 = 0 \\ & x_1 + \ \ x_2 + x_3 = 1 \\ \text{with:} \quad & \text{all variables nonnegative} \end{aligned}$$

Preliminary Step:
$k = 0$
$\mathbf{X}_0 = (1/n, \ldots, 1/n)^T = (1/3, 1/3, 1/3)^T$
$r = 1/\sqrt{n(n-1)} = 1/\sqrt{3(3-1)} = 1/\sqrt{6}$
$\alpha = (n-1)/3n = (3-1)/(3)(3) = 2/9$

Iteration 0:
$\mathbf{Y}_0 = \mathbf{X}_0 = (1/3, 1/3, 1/3)^T$
$\mathbf{D}_0 = \text{diag}\{\mathbf{X}_0\} = \text{diag}\{1/3, 1/3, 1/3\}$
$\mathbf{A} = (1, -2, 1)$; $\mathbf{C}^T = (0, 2, -1)$
$\mathbf{AD}_0 = (1, -2, 1)\,\text{diag}\{1/3, 1/3, 1/3\} = (1/3, -2/3, 1/3)$

$$\mathbf{P} = \begin{pmatrix} \mathbf{AD}_0 \\ \mathbf{1} \end{pmatrix} = \begin{pmatrix} 1/3 & -2/3 & 1/3 \\ 1 & 1 & 1 \end{pmatrix}$$

$\bar{\mathbf{C}} = \mathbf{C}^T\mathbf{D}_0 = (0, 2, -1)\,\text{diag}\{1/3, 1/3, 1/3\} = (0, 2/3, -1/3)$

$$\mathbf{PP}^T = \begin{pmatrix} 0.667 & 0 \\ 0 & 3 \end{pmatrix}; \qquad (\mathbf{PP}^T)^{-1} = \begin{pmatrix} 1.5 & 0 \\ 0 & 0.333 \end{pmatrix}$$

$$\mathbf{P}^T(\mathbf{P}\mathbf{P}^T)^{-1}\mathbf{P} = \begin{pmatrix} 0.5 & 0 & 0.5 \\ 0 & 1 & 0 \\ 0.5 & 0 & 0.5 \end{pmatrix}$$

$\mathbf{C_P} = [\mathbf{I} - \mathbf{P}^T(\mathbf{P}\mathbf{P}^T)^{-1}\mathbf{P}]\bar{\mathbf{C}}^T = (0.167, 0, -0.167)^T$

$\|\mathbf{C_P}\| = \sqrt{(0.167)^2 + 0 + (-0.167)^2} = 0.2362$

$\mathbf{Y}_{new} = \mathbf{Y}_0 - \alpha r \dfrac{\mathbf{C_P}}{\|\mathbf{CP}\|} = (1/3, 1/3, 1/3)^T - \dfrac{2/9(1/\sqrt{6})}{0.2362}(0.167, 0, -0.167)^T = (0.2692, 0.3333, 0.3974)^T$

$\mathbf{X}_1 = \mathbf{Y}_{new} = (0.2692, 0.3333, 0.3974)^T$

$z = \mathbf{C}^T\mathbf{X}_1 = (0, 2, -1)(0.2692, 0.3333, 0.3974)^T = 0.2692$

$k = 0 + 1 = 1$

Iteration 1:

$\mathbf{D}_1 = \text{diag}\{\mathbf{X}_1\} = \text{diag}\{0.2692, 0.3333, 0.3974\}$

$\bar{\mathbf{C}} = \mathbf{C}\mathbf{D}_1 = (0, 2, -1)\,\text{diag}\{0.2692, 0.3333, 0.3974\} = (0, 0.6666, -0.3974)$

$\mathbf{A}\mathbf{D}_1 = (1, -2, 1)\,\text{diag}\{0.2692, 0.3333, 0.3974\} = (0.2692, -0.6666, 0.3974)$

$$\mathbf{P} = \begin{pmatrix} \mathbf{A}\mathbf{D}_1 \\ \mathbf{1} \end{pmatrix} = \begin{pmatrix} 0.2692 & -0.6666 & 0.3974 \\ 1 & 1 & 1 \end{pmatrix}$$

$$\mathbf{P}\mathbf{P}^T = \begin{pmatrix} 0.675 & 0 \\ 0 & 3 \end{pmatrix}; \qquad (\mathbf{P}\mathbf{P}^T)^{-1} = \begin{pmatrix} 1.482 & 0 \\ 0 & 0.333 \end{pmatrix}$$

$$\mathbf{P}^T(\mathbf{P}\mathbf{P}^T)^{-1}\mathbf{P} = \begin{pmatrix} 0.441 & 0.067 & 0.492 \\ 0.067 & 0.992 & -0.059 \\ 0.492 & -0.059 & 0.567 \end{pmatrix}$$

$\mathbf{C_P} = [\mathbf{I} - \mathbf{P}^T(\mathbf{P}\mathbf{P}^T)^{-1}\mathbf{P}]\bar{\mathbf{C}}^T = (0.151, -0.018, -0.132)^T$

$\|\mathbf{C_P}\| = \sqrt{(0.151)^2 + (-0.018)^2 + (-0.132)^2} = 0.2014$

$\mathbf{Y}_{new} = \mathbf{Y}_0 - \alpha r \dfrac{\mathbf{C_P}}{\|\mathbf{C_P}\|} = (1/3, 1/3, 1/3)^T - \dfrac{(2/9)(1/\sqrt{6})}{0.2014}(0.151, -0.018, -0.132)^T$

$= (0.2653, 0.3414, 0.3928)^T$

$\mathbf{D}_1\mathbf{Y}_{new} = \text{diag}\{0.2692, 0.3333, 0.3974\}(0.2653, 0.3414, 0.3928)^T = (0.0714, 0.1138, 0.1561)^T$

$\mathbf{1}\mathbf{D}_1\mathbf{Y}_{new} = 0.3413$

$\mathbf{X}_2 = \dfrac{\mathbf{D}_1\mathbf{Y}_{new}}{\mathbf{1}\mathbf{D}_1\mathbf{Y}_{new}} = (0.2092, 0.3334, 0.4574)^T$

$z = \mathbf{C}^T\mathbf{X}_2 = (0, 2, -1)(0.2092, 0.3334, 0.4574)^T = 0.2094$

5.8 Carry out the first two iterations of Karmarkar's algorithm for the following problem.

$$\begin{aligned} \text{minimize:} \quad & z = x_1 \\ \text{subject to:} \quad & x_1 - 2x_2 + x_3 = 0 \\ & x_1 + \ \ x_2 + x_3 = 1 \\ \text{with:} \quad & \text{all variables nonnegative} \end{aligned}$$

Preliminary Step:

$k = 0$

$\mathbf{X}_0 = (1/n, \ldots, 1/n)^T = (1/3, 1/3, 1/3)^T$

$r = 1/\sqrt{n(n-1)} = 1/\sqrt{3(3-1)} = 1/\sqrt{6}$

$\alpha = (n-1)/3n = (3-1)/(3)(3) = 2/9$

Iteration 0:

$\mathbf{Y}_0 = \mathbf{X}_0 = (1/3, 1/3, 1/3)^T$

$\mathbf{D}_0 = \text{diag}\{\mathbf{X}_0\} = \text{diag}\{1/3, 1/3, 1/3\}$

$\mathbf{A} = (1, -2, 1); \qquad \mathbf{C}^T = (1, 0, 0)$

$\mathbf{A}\mathbf{D}_0 = (1, -2, 1)\,\text{diag}\{1/3, 1/3, 1/3\} = (1/3, -2/3, 1/3)$

$$\mathbf{P} = \begin{pmatrix} \mathbf{AD}_0 \\ \mathbf{1} \end{pmatrix} = \begin{pmatrix} 1/3 & -2/3 & 1/3 \\ 1 & 1 & 1 \end{pmatrix}$$

$$\bar{\mathbf{C}} = \mathbf{C}^T\mathbf{D}_0 = (1, 0, 0)\,\mathrm{diag}\{1/3, 1/3, 1/3\} = (1/3, 0, 0)$$

$$\mathbf{PP}^T = \begin{pmatrix} 0.667 & 0 \\ 0 & 3 \end{pmatrix}; \qquad (\mathbf{PP}^T)^{-1} = \begin{pmatrix} 1.5 & 0 \\ 0 & 0.333 \end{pmatrix}$$

$$\mathbf{P}^T(\mathbf{PP}^T)^{-1}\mathbf{P} = \begin{pmatrix} 0.5 & 0 & 0.5 \\ 0 & 1 & 0 \\ 0.5 & 0 & 0.5 \end{pmatrix}$$

$$\mathbf{C}_\mathbf{P} = [\mathbf{I} - \mathbf{P}^T(\mathbf{PP}^T)^{-1}\mathbf{P}]\bar{\mathbf{C}}^T = (0.167, 0, -0.167)^T$$

$$\|\mathbf{C}_\mathbf{P}\| = \sqrt{(0.167)^2 + (0)^2 + (-0.167)^2} = 0.2361$$

$$\mathbf{Y}_{new} = \mathbf{Y}_0 - \alpha r \frac{\mathbf{C}_\mathbf{P}}{\|\mathbf{C}_\mathbf{P}\|} = (1/3, 1/3, 1/3)^T - \frac{(2/9)(1/\sqrt{6})}{0.2361}(0.167, 0, -0.167)^T = (0.2691, 0.3333, 0.3975)^T$$

$$\mathbf{X}_1 = \mathbf{Y}_{new} = (0.2691, 0.3333, 0.3975)^T$$

$$z = \mathbf{C}^T\mathbf{X}_1 = (1, 0, 0)(0.2691, 0.3333, 0.3975)^T = 0.2691$$

$$k = 0 + 1$$

Iteration 1:

$$\mathbf{D}_1 = \mathrm{diag}\{\mathbf{X}_1\} = \mathrm{diag}\{0.2691, 0.3333, 0.3975\}$$

$$\bar{\mathbf{C}} = \mathbf{C}^T\mathbf{D}_1 = (1, 0, 0)\,\mathrm{diag}\{0.2691, 0.3333, 0.3975\} = 0.2691, 0, 0)$$

$$\mathbf{AD}_1 = (1, -2, 1)\,\mathrm{diag}\{0.2691, 0.3333, 0.3975\} = (0.2691, -0.6666, 0.3975)$$

$$\mathbf{P} = \begin{pmatrix} \mathbf{AD}_1 \\ \mathbf{1} \end{pmatrix} = \begin{pmatrix} 0.2691 & -0.6666 & 0.3975 \\ 1 & 1 & 1 \end{pmatrix}$$

$$\mathbf{PP}^T = \begin{pmatrix} 0.675 & 0 \\ 0 & 3 \end{pmatrix}; \qquad (\mathbf{PP}^T)^{-1} = \begin{pmatrix} 1.482 & 0 \\ 0 & 0.333 \end{pmatrix}$$

$$\mathbf{P}^T(\mathbf{PP}^T)^{-1}\mathbf{P} = \begin{pmatrix} 0.441 & 0.067 & 0.492 \\ 0.067 & 0.992 & -0.059 \\ 0.492 & -0.059 & 0.567 \end{pmatrix}$$

$$\mathbf{C}_\mathbf{P} = [\mathbf{I} - \mathbf{P}^T(\mathbf{PP}^T)^{-1}\mathbf{P}]\bar{\mathbf{C}}^T = (0.151, -0.018, -0.132)^T$$

$$\|\mathbf{C}_\mathbf{P}\|\sqrt{(0.151)^2 + (-0.018)^2 + (-0.132)^2} = 0.2014$$

$$\mathbf{Y}_{new} = \mathbf{Y}_0 - \alpha r \frac{\mathbf{C}_\mathbf{P}}{\|\mathbf{C}_\mathbf{P}\|} = (1/3, 1/3, 1/3)^T - \frac{(2/9)(1/\sqrt{6})}{0.2014}(0.151, -0.018, -0.132)^T$$
$$= (0.2653, 0.3414, 0.3927)^T$$

$$\mathbf{D}_1\mathbf{Y}_{new} = \mathrm{diag}\{0.2691, 0.3333, 0.3975\}(0.2653, 0.3414, 0.3927)^T = (0.0714, 0.1138, 0.1561)^T$$

$$\mathbf{1D}_1\mathbf{Y}_{new} = 0.3413$$

$$\mathbf{X}_2 = \frac{\mathbf{D}_1\mathbf{Y}_{new}}{\mathbf{1D}_1\mathbf{Y}_{new}} = (0.2092, 0.3334, 0.4574)^T$$

$$z = \mathbf{C}^T\mathbf{X}_2 = (1, 0, 0)(0.2029, 0.3334, 0.4574)^T = 0.2092$$

5.9 Carry out the first two iterations of Karmarkar's algorithm for the following problem.

$$\begin{aligned} \text{minimize:} \quad & z = x_1 - 2x_2 + 3x_4 \\ \text{subject to:} \quad & x_1 - 2x_2 - 2x_3 + 3x_4 = 0 \\ & x_1 - 3x_2 - 3x_3 + 5x_4 = 0 \\ & x_1 + x_2 + x_3 + x_4 = 1 \\ \text{with:} \quad & \text{all variables nonnegative} \end{aligned}$$

Preliminary Step:

$$k = 0$$

$$\mathbf{X}_0 = (1/n, \ldots, 1/n)^T = (1/4, 1/4, 1/4, 1/4)^T$$

$r = 1/\sqrt{n(n-1)} = 1/\sqrt{4(4-1)} = 1/\sqrt{12}$
$\alpha = (n-1)/3n = (4-1)/(3)(4) = 1/4$

Iteration 0:

$\mathbf{Y}_0 = \mathbf{X}_0 = (1/4, 1/4, 1/4, 1/4)^T$
$\mathbf{D}_0 = \text{diag}\{\mathbf{X}_0\} = \text{diag}\{1/4, 1/4, 1/4, 1/4\}$

$$\mathbf{A} = \begin{pmatrix} 1 & -2 & -2 & 3 \\ 1 & -3 & -3 & 5 \end{pmatrix}; \qquad \mathbf{C}^T = (1, -2, 0, 3)$$

$$\mathbf{AD}_0 = \begin{pmatrix} 1 & -2 & -2 & 3 \\ 1 & -3 & -3 & 5 \end{pmatrix} \text{diag}\{1/4, 1/4, 1/4, 1/4\} = \begin{pmatrix} 1/4 & -2/4 & -2/4 & 3/4 \\ 1/4 & -3/4 & -3/4 & 5/4 \end{pmatrix}$$

$$\mathbf{P} = \begin{pmatrix} \mathbf{AD}_0 \\ \mathbf{1} \end{pmatrix} = \begin{pmatrix} 1/4 & -2/4 & -2/4 & 3/4 \\ 1/4 & -3/4 & -3/4 & 5/4 \\ 1 & 1 & 1 & 1 \end{pmatrix}$$

$$\bar{\mathbf{C}} = \mathbf{C}^T\mathbf{D}_0 = (1, -2, 0, 3)\,\text{diag}\{1/4, 1/4, 1/4, 1/4\} = (1/4, -2/4, 0, 3/4)$$

$$\mathbf{PP}^T = \begin{pmatrix} 1.125 & 1.75 & 0 \\ 1.75 & 2.75 & 0 \\ 0 & 0 & 4 \end{pmatrix}; \qquad (\mathbf{PP}^T)^{-1} = \begin{pmatrix} 88 & -56 & 0 \\ -56 & 36 & 0 \\ 0 & 0 & 0.25 \end{pmatrix}$$

$$\mathbf{P}^T(\mathbf{PP}^T)^{-1}\mathbf{P} = \begin{pmatrix} 1 & 0 & 0 & 0 \\ 0 & 0.5 & 0.5 & 0 \\ 0 & 0.5 & 0.5 & 0 \\ 0 & 0 & 0 & 1 \end{pmatrix}$$

$$\mathbf{C}_\mathbf{P} = [\mathbf{I} - \mathbf{P}^T(\mathbf{PP}^T)^{-1}\mathbf{P}]\bar{\mathbf{C}}^T = (0, -0.25, 0.25, 0)^T$$

$$\|\mathbf{C}_\mathbf{P}\| = \sqrt{(-0.25)^2 + (0.25)^2} = 0.3536$$

$$\mathbf{Y}_{new} = \mathbf{Y}_0 - \alpha r \frac{\mathbf{C}_\mathbf{P}}{\|\mathbf{C}_\mathbf{P}\|} = (1/4, 1/4, 1/4, 1/4)^T - \frac{(1/4)(1/\sqrt{12})}{0.3536}(0, -0.25, 0.25, 0)^T$$
$$= (0.250, 0.301, 0.199, 0.250)^T$$

$\mathbf{X}_1 = \mathbf{Y}_{new} = (0.250, 0.301, 0.199, 0.250)^T$
$z = \mathbf{C}^T\mathbf{X}_1 = (1, -2, 0, 3)(0.25, 0.301, 0.199, 0.25)^T = 0.398$
$k = 0 + 1 = 1$

Iteration 1:

$\mathbf{D}_1 = \text{diag}\{\mathbf{X}_0\} = \text{diag}\{0.25, 0.301, 0.199, 0.25\}$
$\bar{\mathbf{C}} = \mathbf{C}^T\mathbf{D}_1 = (1, -2, 0, 3)\,\text{diag}\{0.25, 0.301, 0.199, 0.25\} = (0.25, -0.602, 0, 0.75)$

$$\mathbf{AD}_1 = \begin{pmatrix} 1 & -2 & -2 & 3 \\ 1 & -3 & -3 & 5 \end{pmatrix} \text{diag}\{0.25, 0.301, 0.199, 0.25\} = \begin{pmatrix} 0.25 & -0.682 & -0.398 & 0.75 \\ 0.25 & -0.903 & -0.597 & 1.25 \end{pmatrix}$$

$$\mathbf{P} = \begin{pmatrix} \mathbf{AD}_1 \\ \mathbf{1} \end{pmatrix} = \begin{pmatrix} 0.25 & -0.602 & -0.398 & 0.75 \\ 0.25 & -0.903 & -0.597 & 1.25 \\ 1 & 1 & 1 & 1 \end{pmatrix}$$

$$\mathbf{PP}^T = \begin{pmatrix} 1.146 & 1.781 & 0 \\ 1.781 & 2.797 & 0 \\ 0 & 0 & 4 \end{pmatrix}; \qquad (\mathbf{PP}^T)^{-1} = \begin{pmatrix} 87.674 & -55.837 & 0 \\ -55.837 & 35.918 & 0 \\ 0 & 0 & 0.25 \end{pmatrix}$$

$$\mathbf{P}^T(\mathbf{PP}^T)^{-1}\mathbf{P} = \begin{pmatrix} 0.995 & -0.045 & 0.055 & -0.005 \\ -0.045 & 0.605 & 0.485 & -0.045 \\ 0.055 & 0.485 & 0.405 & 0.055 \\ -0.005 & -0.045 & 0.055 & 0.995 \end{pmatrix}$$

$$\mathbf{C}_\mathbf{P} = [\mathbf{I} - \mathbf{P}^T(\mathbf{PP}^T)^{-1}\mathbf{P}]\bar{\mathbf{C}}^T = (-0.022, -0.193, 0.237, -0.022)^T$$

$$\|\mathbf{C}_\mathbf{P}\| = \sqrt{(-0.022)^2 + (-0.193)^2 + (0.237)^2 + (-0.022)^2} = 0.3072$$

$$\mathbf{Y}_{new} = \mathbf{Y}_0 - \alpha r \frac{\mathbf{C}_P}{\|\mathbf{C}_P\|} = (1/4, 1/4, 1/4, 1/4)^T - \frac{(1/4)(1/\sqrt{12})}{0.3072}(-0.022, -0.193, 0.237, -0.022)^T$$
$$= (0.2552, 0.2954, 0.1943, 0.2552)^T$$
$$\mathbf{D}_1\mathbf{Y}_{new} = \text{diag}\{0.25, 0.301, 0.199, 0.25\}(0.2552, 0.2954, 0.1943, 0.2552)^T$$
$$= (0.0638, 0.089, 0.0387, 0.0638)^T$$
$$\mathbf{1}\mathbf{D}_1\mathbf{Y}_{new} = 0.2553$$
$$\mathbf{X}_2 = \frac{\mathbf{D}_1\mathbf{Y}_{new}}{\mathbf{1}\mathbf{D}_1\mathbf{Y}_{new}} = (0.25, 0.349, 0.152, 0.25)^T$$
$$z = \mathbf{C}^T\mathbf{X}_2 = (1, -2, 0, 3)(0.25, 0.349, 0.152, 0.25)^T = 0.302$$

5.10 Carry out the first two iterations of Karmarkar's algorithm for the following problem.

$$\begin{aligned} \text{minimize:} \quad & x_1 + 2x_2 + x_3 - 4x_4 = 0 \\ \text{subject to:} \quad & 2x_1 + x_2 + 2x_3 - 5x_4 = 0 \\ & x_1 \qquad + x_3 - 2x_4 = 0 \\ & x_1 + x_2 + x_3 + x_4 = 1 \\ \text{with:} \quad & \text{all variables nonnegative} \end{aligned}$$

Preliminary Step:

$k = 0$

$\mathbf{X}_0 = (1/n, \ldots, 1/n)^T = (1/4, 1/4, 1/4, 1/4)^T$

$r = 1/\sqrt{n(n-1)} = 1/\sqrt{4(4-1)} = 1/\sqrt{12}$

$\alpha = (n-1)/3n = (4-1)/(3)(4) = 1/4$

Iteration 0:

$\mathbf{Y}_0 = \mathbf{X}_0 = (1/4, 1/4, 1/4, 1/4)^T$

$\mathbf{D}_0 = \text{diag}\{\mathbf{X}_0\} = \text{diag}\{1/4, 1/4, 1/4, 1/4\}$

$$\mathbf{A} = \begin{pmatrix} 2 & 1 & 2 & -5 \\ 1 & 0 & 1 & -2 \end{pmatrix}; \qquad \mathbf{C}^T = (1, 2, 1, -4)^T$$

$$\mathbf{AD}_0 = \begin{pmatrix} 2 & 1 & 2 & -5 \\ 1 & 0 & 1 & -2 \end{pmatrix} \text{diag}\{1/4, 1/4, 1/4, 1/4\} = \begin{pmatrix} 2/4 & 1/4 & 2/4 & -5/4 \\ 1/4 & 0 & 1/4 & -2/4 \end{pmatrix}$$

$$\mathbf{P} = \begin{pmatrix} \mathbf{AD}_0 \\ \mathbf{1} \end{pmatrix} = \begin{pmatrix} 2/4 & 1/4 & 2/4 & -5/4 \\ 1/4 & 0 & 1/4 & -2/4 \\ 1 & 1 & 1 & 1 \end{pmatrix}$$

$$\bar{\mathbf{C}} = \mathbf{C}^T\mathbf{D}_0 = (1, 2, 1, -4)\,\text{diag}\{1/4, 1/4, 1/4, 1/4\} = (1/4, 2/4, 1/4, -1)$$

$$\mathbf{PP}^T = \begin{pmatrix} 2.125 & 0.875 & 0 \\ 0.875 & 0.375 & 0 \\ 0 & 0 & 4 \end{pmatrix}; \qquad (\mathbf{PP}^T)^{-1} = \begin{pmatrix} 12 & -28 & 0 \\ -28 & 68 & 0 \\ 0 & 0 & 0.25 \end{pmatrix}$$

$$\mathbf{P}^T(\mathbf{PP}^T)^{-1}\mathbf{P} = \begin{pmatrix} 0.5 & 0 & 0.5 & 0 \\ 0 & 1 & 0 & 0 \\ 0.5 & 0 & 0.5 & 0 \\ 0 & 0 & 0 & 1 \end{pmatrix}$$

$\mathbf{C}_P = [\mathbf{I} - \mathbf{P}_T(\mathbf{PP}^T)^{-1}\mathbf{P}]\bar{\mathbf{C}}^T = (0, 0, 0, 0)^T = \mathbf{0}$

Since $\mathbf{C}_P = \mathbf{0}$, any feasible solution is an optimal solution.

$\mathbf{Y}_{new} = \mathbf{X}_0 = \mathbf{X}_1 = (1/4, 1/4, 1/4, 1/4)^T$

$z = \mathbf{C}^T\mathbf{X}_1 = (1, 2, 1, -4)(1/4, 1/4, 1/4, 1/4)^T = 0$

5.11 Carry out the first two iterations of Karmarkar's algorithm for the following problem.

$$\begin{aligned} \text{minimize:}\quad & z = 3x_1 - 6x_2 + 5x_3 + 4x_5 \\ \text{subject to:}\quad & x_1 - x_2 + x_3 - x_4 = 0 \\ & x_1 + 2x_2 + x_3 - 4x_5 = 0 \\ & x_1 + x_2 + x_3 + x_4 + x_5 = 0 \\ \text{with:}\quad & \text{all variables nonnegative} \end{aligned}$$

Preliminary Step:

$k = 0$

$\mathbf{X}_0 = (1/n, \ldots, 1/n)^T = (1/5, 1/5, 1/5, 1/5, 1/5)^T$

$r = 1/\sqrt{n(n-1)} = 1/\sqrt{5(5-1)} = 1/\sqrt{20}$

$\alpha = (n-1)/3n = (5-1)/(3)(5) = 4/15$

Iteration 0:

$\mathbf{Y}_0 = \mathbf{X}_0 = (1/5, 1/5, 1/5, 1/5, 1/5)^T$

$\mathbf{D}_0 = \text{diag}\{\mathbf{X}_0\} = \text{diag}\{1/5, 1/5, 1/5, 1/5, 1/5\}$

$$\mathbf{A} = \begin{pmatrix} 1 & -1 & 1 & -1 & 0 \\ 1 & 2 & 1 & 0 & -4 \end{pmatrix}; \qquad \mathbf{C}^T = (3, -6, 5, 0, 4)$$

$$\mathbf{AD}_0 = \begin{pmatrix} 1 & -1 & 1 & -1 & 0 \\ 1 & 2 & 1 & 0 & -4 \end{pmatrix} \text{diag}\{1/5, 1/5, 1/5, 1/5, 1/5\} = \begin{pmatrix} 0.2 & -0.2 & 0.2 & -0.2 & 0 \\ 0.2 & 0.4 & 0.2 & 0 & -0.8 \end{pmatrix}$$

$$\mathbf{P} = \begin{pmatrix} \mathbf{AD}_0 \\ \mathbf{1} \end{pmatrix} = \begin{pmatrix} 0.2 & -0.2 & 0.2 & -0.2 & 0 \\ 0.2 & 0.4 & 0.2 & 0 & -0.8 \\ 1 & 1 & 1 & 1 & 1 \end{pmatrix}$$

$\bar{\mathbf{C}} = \mathbf{C}^T\mathbf{D}_0 = (3, -6, 5, 0, 4)\,\text{diag}\{1/5, 1/5, 1/5, 1/5, 1/5\} = (3/5, -6/5, 1, 0, 4/5)$

$$\mathbf{PP}^T = \begin{pmatrix} 0.16 & 0 & 0 \\ 0 & 0.88 & 0 \\ 0 & 0 & 5 \end{pmatrix}; \qquad (\mathbf{PP}^T)^{-1} = \begin{pmatrix} 6.25 & 0 & 0 \\ 0 & 1.136 & 0 \\ 0 & 0 & 0.2 \end{pmatrix}$$

$$\mathbf{P}^T(\mathbf{PP}^T)^{-1}\mathbf{P} = \begin{pmatrix} 0.495 & 0.041 & 0.495 & -0.050 & 0.018 \\ 0.041 & 0.632 & 0.041 & 0.450 & -0.164 \\ 0.495 & 0.041 & 0.495 & -0.050 & 0.018 \\ -0.050 & 0.450 & -0.050 & 0.450 & 0.200 \\ 0.018 & -0.164 & 0.018 & 0.200 & 0.927 \end{pmatrix}$$

$\mathbf{C_P} = [\mathbf{I} - \mathbf{P}^T(\mathbf{PP}^T)^{-1}\mathbf{P}]\bar{\mathbf{C}}^T = (-0.158, -0.376, 0.242, 0.460, -0.167)^T$

$\|\mathbf{C_P}\| = \sqrt{(-0.158)^2 + (-0.376)^2 + (0.242)^2 + (0.46)^2 + (-0.167)^2} = 0.6815$

$$\mathbf{Y}_{new} = \mathbf{Y}_0 - \alpha r \frac{\mathbf{C_P}}{\|\mathbf{C_P}\|} = (1/5, 1/5, 1/5, 1/5, 1/5)^T - \frac{(4/15)(1/\sqrt{20})}{0.6815}(-0.158, -0.376, 0.242, 0.460, -0.167)^T$$

$$= (0.214, 0.233, 0.179, 0.160, 0.215)^T$$

$\mathbf{X}_1 = \mathbf{Y}_{new} = (0.214, 0.233, 0.179, 0.160, 0.215)^T$

$z = \mathbf{C}^T\mathbf{X}_1 = (3, -6, 5, 0, 4)(0.214, 0.223, 0.179, 0.160, 0.215)^T = 0.999$

$k = 0 + 1 = 1$

Iteration 1:

$\mathbf{D}_1 = \text{diag}\{\mathbf{X}_1\} = \text{diag}\{0.214, 0.233, 0.179, 0.160, 0.215\}$

$\bar{\mathbf{C}} = \mathbf{C}^T\mathbf{D}_1 = (3, -6, 5, 0, 4)\,\text{diag}\{0.214, 0.233, 0.179, 0.160, 0.215\} = (0.624, -1.398, 0.895, 0, 0.860)$

$$\mathbf{AD}_1 = \begin{pmatrix} 1 & -1 & 1 & -1 & 0 \\ 1 & 2 & 1 & 0 & -4 \end{pmatrix} \text{diag}\{0.214, 0.233, 0.179, 0.160, 0.215\}$$

$$= \begin{pmatrix} 0.214 & -0.233 & 0.179 & -0.160 & 0 \\ 0.214 & 0.466 & 0.179 & 0 & -0.860 \end{pmatrix}$$

$$\mathbf{P} = \begin{pmatrix} \mathbf{AD}_1 \\ \mathbf{1} \end{pmatrix} = \begin{pmatrix} 0.214 & -0.233 & 0.179 & -0.160 & 0 \\ 0.214 & 0.466 & 0.179 & 0 & -0.860 \\ 1 & 1 & 1 & 1 & 1 \end{pmatrix}$$

$$\mathbf{PP}^T = \begin{pmatrix} 0.158 & -0.031 & 0 \\ -0.031 & 1.035 & 0 \\ 0 & 0 & 5 \end{pmatrix}; \qquad (\mathbf{PP}^T)^{-1} = \begin{pmatrix} 6.377 & 0.189 & 0 \\ 0.189 & 0.972 & 0 \\ 0 & 0 & 0.2 \end{pmatrix}$$

$$\mathbf{P}^T(\mathbf{PP}^T)^{-1}\mathbf{P} = \begin{pmatrix} 0.554 & -0.011 & 0.496 & -0.025 & -0.014 \\ 0.011 & 0.716 & 0.023 & 0.424 & -0.152 \\ 0.496 & 0.023 & 0.448 & 0.012 & 0.021 \\ -0.025 & 0.424 & 0.012 & 0.363 & 0.226 \\ 0.014 & -0.152 & 0.021 & 0.226 & 0.919 \end{pmatrix}$$

$$\mathbf{C_P} = [\mathbf{I} - \mathbf{P}^T(\mathbf{PP}^T)^{-1}\mathbf{P}]\bar{\mathbf{C}}^T = (-0.162,\ -0.279,\ 0.190,\ 0.403,\ -0.152)^T$$

$$\|\mathbf{C_P}\| = \sqrt{(-0.162)^2 + (-0.279)^2 + (0.190)^2 + (0.403)^2 + (-0.152)^2} = 0.5707$$

$$\mathbf{Y}_{new} = \mathbf{Y}_0 - \alpha r \frac{\mathbf{C_P}}{\|\mathbf{C_P}\|} = (1/5, 1/5, 1/5, 1/5, 1/5)^T - \frac{(4/15)(1\sqrt{20})}{0.5707}(-0.162,\ -0.279,\ 0.190,\ 0.403,\ -0.152)^T$$

$$= (0.217, 0.229, 0.180, 0.158, 0.216)^T$$

$$\mathbf{D}_1\mathbf{Y}_{new} = \text{diag}\{0.214, 0.233, 0.179, 0.160, 0.215\}(0.217, 0.229, 0.180, 0.158, 0.216)^T$$

$$= (0.0464, 0.0534, 0.0322, 0.0252, 0.0464)^T$$

$$\mathbf{1D}_1\mathbf{Y}_{new} = 0.2036$$

$$\mathbf{X}_2 = \frac{\mathbf{D}_1\mathbf{Y}_{new}}{\mathbf{1D}_1\mathbf{Y}_{new}} = (0.2279, 0.2623, 0.1582, 0.1238, 0.2279)^T$$

$$z = \mathbf{C}^T\mathbf{X}_2 = (3, -6, 5, 0, 4)(0.2279, 0.2623, 0.1582, 0.1238, 0.2279)^T = 0.8125$$

5.12 Carry out the first two iterations of Karmarkar's algorithm for the following problem.

$$\begin{aligned} \text{minimize:} \quad & z = 2x_1 + x_2 + 2x_3 - 2x_4 \\ \text{subject to:} \quad & 2x_1 + x_2 + 2x_3 - 2x_4 - 3x_5 = 0 \\ & 2x_1 \qquad - x_3 + x_4 - 2x_5 = 0 \\ & x_1 + x_2 + x_3 + x_4 + x_5 = 0 \\ \text{with:} \quad & \text{all variables nonnegative} \end{aligned}$$

Preliminary Step:

$k = 0$

$\mathbf{X}_0 = (1/n, \ldots, 1/n)^T = (1/5, 1/5, 1/5, 1/5, 1/5)^T$

$r = 1/\sqrt{n(n-1)} = 1/\sqrt{5(5-1)} = 1/\sqrt{20}$

$\alpha = (n-1)/3n = (5-1)/(3)(5) = 4/15$

Iteration 0:

$\mathbf{Y}_0 = \mathbf{X}_0 = (1/5, 1/5, 1/5, 1/5, 1/5)^T$

$\mathbf{D}_0 = \text{diag}\{\mathbf{X}_0\} = \text{diag}\{1/5, 1/5, 1/5, 1/5, 1/5\}$

$$\mathbf{A} = \begin{pmatrix} 2 & 1 & 2 & -2 & -3 \\ 2 & 0 & -1 & 1 & -2 \end{pmatrix}; \qquad \mathbf{C}^T = (2, 1, 2, -2, 0)$$

$$\mathbf{AD}_0 = \begin{pmatrix} 2 & 1 & 2 & -2 & -3 \\ 2 & 0 & -1 & 1 & -2 \end{pmatrix} \text{diag}\{1/5, 1/5, 1/5, 1/5, 1/5\} = \begin{pmatrix} 0.4 & 0.2 & 0.4 & -0.4 & -0.6 \\ 0.4 & 0 & -0.2 & 0.2 & -0.4 \end{pmatrix}$$

$$\mathbf{P} = \begin{pmatrix} \mathbf{AD}_0 \\ \mathbf{1} \end{pmatrix} = \begin{pmatrix} 0.4 & 0.2 & 0.4 & -0.4 & -0.6 \\ 0.4 & 0 & -0.2 & 0.2 & -0.4 \\ 1 & 1 & 1 & 1 & 1 \end{pmatrix}$$

$$\bar{\mathbf{C}} = \mathbf{C}^T\mathbf{D}_0 = (2, 1, 2, -2, 0)\,\text{diag}\{1/5, 1/5, 1/5, 1/5, 1/5\} = (0.4, 0.2, 0.4, -0.4, 0)$$

$$\mathbf{PP}^T = \begin{pmatrix} 0.88 & 0.24 & 0 \\ 0.24 & 0.4 & 0 \\ 0 & 0 & 5 \end{pmatrix}; \qquad (\mathbf{PP}^T)^{-1} = \begin{pmatrix} 1.3587 & -0.8152 & 0 \\ -0.8152 & 2.9891 & 0 \\ 0 & 0 & 0.2 \end{pmatrix}$$

$$\mathbf{P}^T(\mathbf{P}\mathbf{P}^T)^{-1}\mathbf{P} = \begin{pmatrix} 0.6348 & 0.2435 & 0.1130 & 0.2870 & -0.2783 \\ 0.2435 & 0.2543 & 0.3413 & 0.0587 & 0.1022 \\ 0.1130 & 0.3413 & 0.6674 & -0.2674 & 0.1457 \\ 0.2870 & 0.0587 & -0.2674 & 0.6674 & 0.2543 \\ -0.2783 & 0.1022 & 0.1457 & 0.2543 & 0.7761 \end{pmatrix}$$

$$\mathbf{C}_\mathbf{P} = [\mathbf{I} - \mathbf{P}^T(\mathbf{P}\mathbf{P}^T)^{-1}\mathbf{P}]\bar{\mathbf{C}}^T = (0.167, -0.0613, -0.0874, -0.1526, 0.1343)^T$$

$$\|\mathbf{C}_\mathbf{P}\| \sqrt{(0.167)^2 + (-0.0613)^2 + (-0.0874)^2 + (-0.1526)^2 + (0.1343)^2} = 0.2839$$

$$\mathbf{Y}_{new} = \mathbf{Y}_0 - \alpha r \frac{\mathbf{C}_\mathbf{P}}{\|\mathbf{C}_\mathbf{P}\|} = (1/5, 1/5, 1/5, 1/5, 1/5)^T - \frac{(4/15)(1/\sqrt{20})}{0.2839}$$
$$\times (0.167, -0.0613, -0.0874, -0.1526, 0.1343)^T$$
$$= (0.1649, 0.2129, 0.2184, 0.2321, 0.1718)^T$$

$$\mathbf{X}_1 = \mathbf{Y}_{new} = (0.1649, 0.2129, 0.2184, 0.2321, 0.1718)^T$$

$$z = \mathbf{C}^T\mathbf{X}_1 = (2, 1, 2, -2, 0), (0.1649, 0.2129, 0.2184, 0.2321, 0.1718)^T = 0.5154$$

$$k = 0 + 1 = 1$$

Iteration 1:

$$\mathbf{D}_1 = \text{diag}\{\mathbf{X}_1\} = \text{diag}\{0.1649, 0.2129, 0.2184, 0.2321, 0.1718\}$$

$$\bar{\mathbf{C}} = \mathbf{C}^T\mathbf{D}_1 = (2, 1, 2, -2, 0)\,\text{diag}\{0.1649, 0.2129, 0.2184, 0.2321, 0.1718\} = (0.3298, 0.2129, 0.4368, -0.4642, 0)$$

$$\mathbf{A}\mathbf{D}_1 = \begin{pmatrix} 2 & 1 & 2 & -2 & -3 \\ 2 & 0 & -1 & 1 & -2 \end{pmatrix} \text{diag}\{0.1649, 0.2129, 0.2184, 0.2321, 0.1718\}$$
$$= \begin{pmatrix} 0.3298 & 0.2129 & 0.4368 & -0.4642 & -0.5154 \\ 0.3298 & 0 & -0.2184 & 0.2321 & -0.3436 \end{pmatrix}$$

$$\mathbf{P} = \begin{pmatrix} \mathbf{A}\mathbf{D}_1 \\ \mathbf{1} \end{pmatrix} = \begin{pmatrix} 0.3298 & 0.2129 & 0.4368 & -0.4642 & -0.5154 \\ 0.3298 & 0 & -0.2184 & 0.2321 & -0.3436 \\ 1 & 1 & 1 & 1 & 1 \end{pmatrix}$$

$$\mathbf{P}\mathbf{P}^T = \begin{pmatrix} 0.826 & 0.0827 & 0 \\ 0.0827 & 0.3284 & 0 \\ 0 & 0 & 5 \end{pmatrix}; \qquad (\mathbf{P}\mathbf{P}^T)^{-1} = \begin{pmatrix} 1.242 & -0.3128 & 0 \\ -0.3128 & 3.1239 & 0 \\ 0 & 0 & 0.2 \end{pmatrix}$$

$$\mathbf{P}^T(\mathbf{P}\mathbf{P}^T)^{-1}\mathbf{P} = \begin{pmatrix} 0.6069 & 0.2653 & 0.1314 & 0.2730 & -0.2765 \\ 0.2653 & 0.2563 & 0.3300 & 0.0618 & 0.0866 \\ 0.1314 & 0.3300 & 0.6456 & -0.2736 & 0.1665 \\ 0.2730 & 0.0618 & -0.2736 & 0.7033 & 0.2355 \\ -0.2765 & 0.0866 & 0.1665 & 0.2355 & 0.7879 \end{pmatrix}$$

$$\mathbf{C}_\mathbf{P} = [\mathbf{I} - \mathbf{P}^T(\mathbf{P}\mathbf{P}^T)^{-1}\mathbf{P}]\bar{\mathbf{C}}^T = (0.1425, -0.0446, -0.0858, -0.1214, 0.1093)^T$$

$$\|\mathbf{C}_\mathbf{P}\| = \sqrt{(0.1425)^2 + (-0.0446)^2 + (-0.0858)^2 + (-0.1214)^2 + (0.1093)^2} = 0.2374$$

$$\mathbf{Y}_{new} = \mathbf{Y}_0 - \alpha r \frac{\mathbf{C}_\mathbf{P}}{\|\mathbf{C}_\mathbf{P}\|} = (1/5, 1/5, 1/5, 1/5, 1/5)^T - \frac{(4/15)(1\sqrt{20})}{0.2374}$$
$$\times (0.1425, -0.0446, -0.0858, -0.1214, 0.1093)^T$$
$$= (0.1642, 0.2112, 0.2216, 0.2305, 0.1725)^T$$

$$\mathbf{D}_1\mathbf{Y}_{new} = \text{diag}\{0.1649, 0.2129, 0.2184, 0.2321, 0.1718\}(0.1642, 0.2112, 0.2216, 0.2305, 0.1725)^T$$
$$= (0.0271, 0.0450, 0.0484, 0.0535, 0.0296)^T$$

$$\mathbf{1}\mathbf{D}_1\mathbf{Y}_{new} = 0.2036$$

$$\mathbf{X}_2 = \frac{\mathbf{D}_1\mathbf{Y}_{new}}{\mathbf{1}\mathbf{D}_1\mathbf{Y}_{new}} = (0.1330, 0.2209, 0.2377, 0.2628, 0.1456)^T$$

$$z = \mathbf{C}^T\mathbf{X}_2 = (2, 1, 2, -2, 0)(0.1330, 0.2209, 0.2377, 0.2628, 0.1456)^T = 0.4367$$

5.13 Convert the following problem into Karmarkar's special form:

$$\begin{aligned} \text{maximize:} \quad & z = 2x_1 + x_2 \\ \text{subject to:} \quad & x_1 + x_2 \le 5 \\ & x_1 - x_2 \le 3 \\ \text{with:} \quad & \text{all variables nonnegative} \end{aligned}$$

1. Dual of the given problem.

$$\begin{aligned} \text{minimize:} \quad & z = 5w_1 + 3w_2 \\ \text{subject to:} \quad & w_1 + w_2 \ge 2 \\ & w_1 - w_2 \ge 1 \\ \text{with:} \quad & \text{all variables nonnegative} \end{aligned}$$

2. Introduction of slack and surplus variables and combination of primal and dual problems.

$$x_1 + x_2 + x_3 = 5 \qquad w_1 + w_2 - w_3 = 2$$
$$x_1 - x_2 + x_4 = 3 \qquad w_1 - w_2 - w_4 = 1$$
$$2x_1 + x_2 = 5w_1 + 3w_2$$

with: all variables nonnegative

3. Addition of a boundary constraint with slack variable s.

$$x_1 + x_2 + x_3 = 5 \qquad w_1 + w_2 - w_3 = 2$$
$$x_1 - x_2 + x_4 = 3 \qquad w_1 - w_2 - w_4 = 1$$
$$2x_1 + x_2 - 5w_1 - 3w_2 = 0$$
$$\sum_{i=1}^{4} x_i + \sum_{i=1}^{4} w_i + s = K$$

with: all variables nonnegative

4. Homogenized equivalent system with dummy variable d.

$$x_1 + x_2 + x_3 - 5d = 0 \qquad w_1 + w_2 - w_3 - 2d = 0$$
$$x_1 - x_2 + x_4 - 3d = 0 \qquad w_1 - w_2 - w_4 - d = 0$$
$$2x_1 + x_2 - 5w_1 - 3w_2 = 0$$
$$\sum_{i=1}^{4} x_i + \sum_{i=1}^{4} w_i + s - Kd = 0$$
$$\sum_{i=1}^{4} x_i + \sum_{i=1}^{4} w_i + s + d = (K + 1)$$

with: all variables nonnegative

5. Introduction of the transformations.

$$x_j = (K + 1)y_j, \quad j = 1, \ldots, 4 \qquad s = (K + 1)y_9$$
$$w_j = (K + 1)y_{4+j}, \; j = 1, \ldots, 4 \qquad d = (K + 1)y_{10}$$

The above transformations yield the following system:

$$y_1 + y_2 + y_3 - 5y_{10} = 0 \qquad y_5 + y_6 - y_7 - 2y_{10} = 0$$
$$y_1 - y_2 + y_4 - 3y_{10} = 0 \qquad y_5 - y_6 - y_8 - y_{10} = 0$$
$$2y_1 + y_2 - 5y_5 - 3y_6 = 0$$
$$\sum_{i=1}^{9} y_i - Ky_{10} = 0$$
$$\sum_{i=1}^{10} y_i = 1$$

with: all variables nonnegative

6. Introduction of the artificial variable with appropriate constraint coefficients.

$$\begin{aligned}
\text{minimize:}\quad & y_{11} \\
\text{subject to:}\quad & y_1 + y_2 + y_3 - 5y_9 + 2y_{11} = 0 \\
& y_1 - y_2 + y_4 - 3y_{10} + 2y_{11} = 0 \\
& y_5 + y_6 - y_7 - 2y_{10} + y_{11} = 0 \\
& y_5 - y_6 - y_8 - y_{10} + 2y_{11} = 0 \\
& 2y_1 + y_2 - 5y_5 - 3y_6 + 5y_{11} = 0 \\
& \sum_{i=1}^{9} y_i - Ky_{10} + (K-9)y_{11} = 0 \\
& \sum_{i=1}^{11} y_i = 1 \\
\text{with:}\quad & \text{all variables nonnegative}
\end{aligned}$$

5.14 Convert the following problem into Karmarkar's special form:

$$\begin{aligned}
\text{maximize:}\quad & x_1 + 4x_2 \\
\text{subject to:}\quad & x_1 + 2x_2 \le 10 \\
& 2x_1 + 3x_2 \le 20 \\
& x_1 \le 6 \\
\text{with:}\quad & \text{all variables nonnegative}
\end{aligned}$$

1. Dual of the given problem.

$$\begin{aligned}
\text{minimize:}\quad & 10w_1 + 20w_2 + 6w_3 \\
\text{subject to:}\quad & w_1 + 2w_2 + w_3 \ge 1 \\
& 2w_1 + 3w_2 \ge 4 \\
\text{with:}\quad & \text{all variables nonnegative}
\end{aligned}$$

2. Introduction of slack and surplus variables and combination of primal and dual problems.

$$\begin{aligned}
x_1 + 2x_2 + x_3 &= 0 & w_1 + 2w_2 + w_3 - w_4 &= 1 \\
2x_1 + 3x_2 + x_4 &= 20 & 2w_1 + 3w_2 - w_5 &= 4 \\
x_1 + x_5 &= 6 \\
x_1 + 4x_2 &= 10w_1 + 20w_2 + 6w_3 \\
\text{with:}\quad & \text{all variables nonnegative}
\end{aligned}$$

3. Addition of a boundary constraint with slack variable s.

$$\begin{aligned}
x_1 + 2x_2 + x_3 &= 10 & w_1 + 2w_2 + w_3 - w_4 &= 1 \\
2x_1 + 3x_2 + x_4 &= 20 & 2w_1 + 3w_2 - w_5 &= 4 \\
x_1 + x_5 &= 6 \\
x_1 + 4x_2 - 10w_1 - 20w_2 - 6w_3 &= 0 \\
\sum_{i=1}^{5} x_i + \sum_{i=1}^{5} w_i + s &= K \\
\text{with:}\quad & \text{all variables nonnegative}
\end{aligned}$$

4. Homogenized equivalent system with dummy variable d.

$$\begin{aligned}
x_1 + 2x_2 + x_3 - 10d &= 0 & w_1 + 2w_2 + w_3 - w_4 - d &= 0 \\
2x_1 + 3x_2 + x_4 - 20d &= 0 & 2w_1 + 3w_2 - w_5 - 4d &= 0 \\
x_1 + x_5 - 6d &= 0
\end{aligned}$$

$$x_1 + 4x_2 - 10w_1 - 20w_2 - 6w_3 = 0$$
$$\sum_{i=1}^{5} x_i + \sum_{i=1}^{5} w_i + s - Kd = 0$$
$$\sum_{i=1}^{5} x_i + \sum_{i=1}^{5} w_i + s + d = (K+1)$$

with: all variables nonnegative

5. Introduction of the transformations.

$$x_j = (K+1)y_j, \quad j = 1, \ldots, 5 \qquad s = (K+1)y_{11}$$
$$w_j = (K+1)y_{5+j}, \; j = 1, \ldots, 5 \qquad d = (K+1)y_{12}$$

The following transformations yield the following system:

$$y_1 + 2y_2 + y_3 - 10y_{12} = 0 \qquad y_6 + 2y_7 + y_8 - y_9 - y_{12} = 0$$
$$2y_1 + 3y_2 + y_4 - 20y_{12} = 0 \qquad 2y_6 + 3y_7 - y_{10} - 4y_{12} = 0$$
$$y_1 + y_5 - 6y_{12} = 0$$
$$y_1 + 4y_2 - 10y_6 - 20y_7 - 6y_8 = 0$$
$$\sum_{i=1}^{11} y_i - Ky_{12} = 0$$
$$\sum_{i=1}^{12} y_i = 1$$

with: all variables nonnegative

6. Introduction of the artificial variable with appropriate constraint coefficients.

minimize: y_{13}

subject to:

$$y_1 + 2y_2 + y_3 - 10y_{12} + 6y_{13} = 0$$
$$2y_1 + 3y_2 + y_4 - 20y_{12} + 14y_{13} = 0$$
$$y_1 + y_5 - 6y_{12} + 4y_{13} = 0$$
$$y_6 + 2y_7 + y_8 - y_9 - y_{12} - 2y_{13} = 0$$
$$2y_6 + 3y_7 - y_{10} - 4y_{12} = 0$$
$$y_1 + 4y_2 - 10y_6 - 20y_7 - 6y_8 + 31y_{13} = 0$$
$$\sum_{i=1}^{11} y_i - Ky_{12} + (K-11)y_{13} = 0$$
$$\sum_{i=1}^{13} y_i = 1$$

with: all variables nonnegative

5.15 Convert the following problem into Karmarkar's special form:

minimize: $z = 3x_1 + 4x_2$

subject to:

$$x_1 + 2x_2 \geq 8$$
$$2x_1 - 3x_2 \leq 6$$
$$x_1 + x_2 \geq 5$$

with: all variables nonnegative

The given primal problem is rewritten as follows:

$$\begin{aligned} \text{minimize:} \quad & z = 3x_1 + 4x_2 \\ \text{subject to:} \quad & x_1 + 2x_2 \geq 8 \\ & -2x_1 + 3x_2 \geq -6 \\ & x_1 + x_2 \geq 5 \\ \text{with:} \quad & \text{all variables nonnegative} \end{aligned}$$

1. Dual of the given problem.

$$\begin{aligned} \text{maximize:} \quad & z = 8w_1 - 6w_2 + 5w_3 \\ \text{subject to:} \quad & w_1 - 2w_2 + w_3 \leq 3 \\ & 2w_1 + 3w_2 + w_3 \leq 4 \\ \text{with:} \quad & \text{all variables nonnegative} \end{aligned}$$

2. Introduction of slack and surplus variables and combination of primal and dual problems.

$$\begin{aligned} x_1 + 2x_2 - x_3 &= 8 & w_1 - 2w_2 + w_3 + w_4 &= 3 \\ -2x_1 + 3x_2 - x_4 &= -6 & 2w_1 + 3w_2 + w_3 + w_5 &= 4 \\ x_1 + x_2 - x_5 &= 5 \end{aligned}$$

$$3x_1 + 4x_2 = 8w_1 - 6w_2 + 5w_3$$

with: all variables nonnegative

3. Addition of a boundary constraint with slack variable s.

$$\begin{aligned} x_1 + 2x_2 - x_3 &= 8 & w_1 - 2w_2 + w_3 + w_4 &= 3 \\ -2x_1 + 3x_2 - x_4 &= -6 & 2w_1 + 3w_2 + w_3 + w_5 &= 4 \\ x_1 + x_2 - x_5 &= 5 \end{aligned}$$

$$3x_1 + 4x_2 - 8w_1 + 6w_2 - 5w_3 = 0$$

$$\sum_{i=1}^{5} x_i + \sum_{i=1}^{5} w_i + s = K$$

with: all variables nonnegative

4. Homogenized equivalent system with dummy variable d.

$$\begin{aligned} x_1 + 2x_2 - x_3 - 8d &= 0 & w_1 - 2w_2 + w_3 + w_4 - 3d &= 0 \\ -2x_1 + 3x_2 - x_4 + 6d &= 0 & 2w_1 + 3w_2 + w_3 + w_5 - 4d &= 0 \\ x_1 + x_2 - x_5 - 5d &= 0 \end{aligned}$$

$$3x_1 + 4x_2 - 8w_1 + 6w_2 - 5w_3 = 0$$

$$\sum_{i=1}^{5} x_i + \sum_{i=1}^{5} w_i + s - Kd = 0$$

$$\sum_{i=1}^{5} x_i + \sum_{i=1}^{5} w_i + s + d = (K + 1)$$

with: all variables nonnegative

5. Introduction of the transformations.

$$\begin{aligned} x_j &= (K+1)y_j, \quad j = 1, \ldots, 5 & s &= (K+1)y_{11} \\ w_j &= (K+1)y_{5+j}, \; j = 1, \ldots, 5 & d &= (K+1)y_{12} \end{aligned}$$

The above transformations yield the following system:

$$y_1 + 2y_2 - y_3 - 8y_{12} = 0 \qquad y_6 - 2y_7 + y_8 + y_9 - 3y_{12} = 0$$
$$-2y_1 + 3y_2 - y_4 + 6y_{12} = 0 \qquad 2y_6 + 3y_7 + y_8 + y_{10} - 4y_{12} = 0$$
$$y_1 + y_2 - y_5 - 5y_{12} = 0$$
$$3y_1 + 4y_2 - 8y_6 + 6y_7 - 5y_8 = 0$$
$$\sum_{i=1}^{11} y_i - Ky_{12} = 0$$
$$\sum_{i=1}^{12} y_i = 1$$

with: all variables nonnegative

6. Introduction of the artificial variable with appropriate constraint coefficients

$$\text{minimize: } y_{13}$$
$$\text{subject to: } y_1 + 2y_2 - y_3 - 8y_{12} + 6y_{13} = 0$$
$$-2y_1 + 3y_2 - y_4 + 6y_{12} - 6y_{13} = 0$$
$$y_1 + y_2 - y_5 - 5y_{12} + 4y_{13} = 0$$
$$y_6 - 2y_7 + y_8 + y_9 - 3y_{12} + 2y_{13} = 0$$
$$2y_6 + 3y_7 + y_8 + y_{10} - 4y_{12} - 3y_{13} = 0$$
$$3y_1 + 4y_2 - 8y_6 - 6y_7 - 5y_8 = 0$$
$$\sum_{i=1}^{11} y_i - Ky_{12} + (K - 11)y_{13} = 0$$
$$\sum_{i=1}^{13} y_i = 1$$

with: all variables nonnegative

5.16 Convert the following problem into Karmarkar's special form:

$$\text{minimize: } z = 12x_1 + 26x_2 + 80x_3$$
$$\text{subject to: } 2x_1 + 6x_2 + 5x_3 \geq 4$$
$$4x_1 + 2x_2 + x_3 \geq 10$$
$$x_1 + x_2 + 2x_3 \geq 6$$

with: all variables nonnegative

1. Dual of the given problem.

$$\text{maximize: } z = 4w_1 + 10w_2 + 6w_3$$
$$\text{subject to: } 2w_1 + 4w_2 + w_3 \leq 12$$
$$6w_1 + 2w_2 + w_3 \leq 26$$
$$5w_1 + w_2 + 2w_3 \leq 80$$

with: all variables nonnegative

2. Introduction of slack and surplus variables and combination of primal and dual problems.

$$\begin{aligned} 2x_1 + 6x_2 + 5x_3 - x_4 &= 4 & \qquad 2w_1 + 4w_2 + w_3 + w_4 &= 12 \\ 4x_1 + 2x_2 + x_3 - x_5 &= 10 & \qquad 6w_1 + 2w_2 + w_3 + w_5 &= 26 \\ x_1 + x_2 + 2x_3 - x_6 &= 6 & \qquad 5w_1 + w_2 + 2w_3 + w_6 &= 80 \end{aligned}$$

$$12x_1 + 26x_2 + 80x_3 = 4w_1 + 10w_2 + 6w_3$$

with: all variables nonnegative

3. Addition of a boundary constraint with slack variable s.

$$\begin{aligned} 2x_1 + 6x_2 + 5x_3 - x_4 &= 4 & \qquad 2w_1 + 4w_2 + w_3 + w_4 &= 12 \\ 4x_1 + 2x_2 + x_3 - x_5 &= 10 & \qquad 6w_1 + 2w_2 + w_3 + w_5 &= 26 \\ x_1 + x_2 + 2x_3 - x_6 &= 6 & \qquad 5w_1 + w_2 + 2w_3 + w_6 &= 80 \end{aligned}$$

$$12x_1 + 26x_2 + 80x_3 - 4w_1 - 10w_2 - 6w_3 = 0$$

$$\sum_{i=1}^{6} x_i + \sum_{i=1}^{6} w_i + s = K$$

with: all variables nonnegative

4. Homogenized equivalent system with dummy variable d.

$$\begin{aligned} 2x_1 + 6x_2 + 5x_3 - x_4 - 4d &= 0 & \qquad 2w_1 + 4w_2 + w_3 + w_4 - 12d &= 0 \\ 4x_1 + 2x_2 + x_3 - x_5 - 10d &= 0 & \qquad 6w_1 + 2w_2 + w_3 + w_5 - 26d &= 0 \\ x_1 + x_2 + 2x_3 - x_6 - 6d &= 0 & \qquad 5w_1 + w_2 + 2w_3 + w_6 - 80d &= 0 \end{aligned}$$

$$12x_1 + 26x_2 + 80x_3 - 4w_1 - 10w_2 - 6w_3 = 0$$

$$\sum_{i=1}^{6} x_i + \sum_{i=1}^{6} w_i + s - Kd = 0$$

$$\sum_{i=1}^{6} x_i + \sum_{i=1}^{6} w_i + s + d = (K + 1)$$

with: all variables nonnegative

5. Introduction of the transformations.

$$\begin{aligned} x_j &= (K+1)y_j, \quad j = 1, \ldots, 6 & \qquad s &= (K+1)y_{13} \\ w_j &= (K+1)y_{6+j}, \; j = 1, \ldots, 6 & \qquad d &= (K+1)y_{14} \end{aligned}$$

The above transformations yield the following system:

$$\begin{aligned} 2y_1 + 6y_2 + 6y_3 - y_4 - 4y_{14} &= 0 & \qquad 2y_7 + 4y_8 + y_9 + y_{10} - 12y_{14} &= 0 \\ 4y_1 + 2y_2 + y_3 - y_5 - 10y_{14} &= 0 & \qquad 6y_7 + 2y_8 + y_9 + y_{11} - 26y_{14} &= 0 \\ y_1 + y_2 + 2y_3 - y_6 - 6y_{14} &= 0 & \qquad 5y_7 + y_8 + 2y_9 + y_{12} - 80y_{14} &= 0 \end{aligned}$$

$$12y_1 + 26y_2 + 80y_3 - 4y_7 - 10y_8 - 6y_9 = 0$$

$$\sum_{i=1}^{13} y_i - Ky_{14} = 0$$

$$\sum_{i=1}^{14} y_i = 1$$

with: all variables nonnegative

6. Introduction of the artificial variable with appropriate constraint coefficients.

$$\begin{aligned}
&\text{minimize:} \quad y_{15} \\
&\text{subject to:} \quad 2y_1 + 6y_2 + 6y_3 - y_4 - 13y_{15} = 0 \\
&\qquad 4y_1 + 2y_2 + y_3 - y_5 - 10y_{14} + 4y_{15} = 0 \\
&\qquad y_1 + y_2 + 2y_3 - y_6 - 6y_{14} + 3y_{15} = 0 \\
&\qquad 2y_7 + 4y_8 + y_9 + y_{10} - 12y_{14} + 4y_{15} = 0 \\
&\qquad 6y_7 + 2y_8 + y_9 + y_{11} - 26y_{14} + 16y_{15} = 0 \\
&\qquad 5y_7 + y_8 + 2y_9 + y_{12} - 80y_{14} + 71y_{15} = 0 \\
&\qquad 12y_1 + 26y_2 + 80y_3 - 4y_7 - 10y_8 - 6y_9 - 98y_{15} = 0 \\
&\qquad \sum_{i=1}^{13} y_i - Ky_{14} + (K - 13)y_{15} = 0 \\
&\qquad \sum_{i=1}^{15} y_i = 1 \\
&\text{with:} \quad \text{all variables nonnegative}
\end{aligned}$$

5.17 Convert the following problem into Karmarkar's special form:

$$\begin{aligned}
&\text{maximize:} \quad z = 2x_1 + 3x_2 + x_3 + 4x_4 \\
&\text{subject to:} \quad 4x_1 + 3x_2 + x_3 + x_4 \le 10 \\
&\qquad 3x_1 + 2x_3 - x_4 \le 8 \\
&\text{with:} \quad \text{all variables nonnegative}
\end{aligned}$$

1. Dual of the given problem.

$$\begin{aligned}
&\text{minimize:} \quad 10w_1 + 8w_2 \\
&\text{subject to:} \quad 4w_1 + 3w_2 \ge 2 \\
&\qquad 3w_1 + 2w_2 \ge 3 \\
&\qquad w_1 \ge 1 \\
&\qquad w_1 - w_2 \ge 4 \\
&\text{with:} \quad \text{all variables nonnegative}
\end{aligned}$$

2. Introduction of slack and surplus variables and combination of primal and dual problems.

$$\begin{aligned}
4x_1 + 3x_2 + x_3 + x_4 + x_5 &= 10 & 4w_1 + 3w_2 - w_3 &= 2 \\
3x_1 + 2x_3 - x_4 + x_6 &= 8 & 3w_1 + 2w_2 - w_4 &= 3 \\
& & w_1 - w_5 &= 1 \\
& & w_1 - w_2 - w_6 &= 4 \\
2x_1 + 3x_2 + x_3 + 4x_4 &= 10w_1 + 8w_2 & &
\end{aligned}$$

with: all variables nonnegative

3. Addition of a boundary constraint with slack variable s.

$$\begin{aligned}
4x_1 + 3x_2 + x_3 + x_4 + x_5 &= 10 & 4w_1 + 3w_2 - w_3 &= 2 \\
3x_1 + 2x_3 - x_4 + x_6 &= 8 & 3w_1 + 2w_2 - w_4 &= 3 \\
& & w_1 - w_5 &= 1 \\
& & w_1 - w_2 - w_6 &= 4
\end{aligned}$$

$$2x_1 + 3x_2 + x_3 + 4x_4 - 10w_1 - 8w_2 = 0$$

$$\sum_{i=1}^{6} x_i + \sum_{i=1}^{6} w_i + s = K$$

with: all variables nonnegative

4. Homogenized equivalent system with dummy variable d.

$$4x_1 + 3x_2 + x_3 + x_4 + x_5 - 10d = 0 \qquad 4w_1 + 3w_2 - w_3 - 2d = 0$$

$$3x_1 + 2x_3 - x_4 + x_6 - 8d = 0 \qquad 3w_1 + 2w_2 - w_4 - 3d = 0$$

$$w_1 - w_5 - d = 0$$

$$w_1 - w_2 - w_6 - 4d = 0$$

$$2x_1 + 3x_2 + x_3 + 4x_4 - 10w_1 - 8w_2 = 0$$

$$\sum_{i=1}^{6} x_i + \sum_{i=1}^{6} w_i + s - Kd = 0$$

$$\sum_{i=1}^{6} x_i + \sum_{i=1}^{6} w_i + s + d = (K + 1)$$

with: all variables nonnegative

5. Introduction of the transformations

$$x_j = (K + 1)y_j, \quad j = 1, \ldots, 6 \qquad s = (K + 1)y_{13}$$

$$w_j = (K + 1)y_{6+j}, \; j = 1, \ldots, 6 \qquad d = (K + 1)y_{14}$$

The above transformations yield the following system:

$$4y_1 + 3y_2 + y_3 + y_4 + y_5 - 10y_{14} = 0 \qquad 4y_7 + 3y_8 - y_9 - 2y_{14} = 0$$

$$3y_1 + 2y_3 - y_4 + y_6 - 8y_{14} = 0 \qquad 3y_7 + 2y_8 - y_{10} - 3y_{14} = 0$$

$$y_7 - y_{11} - y_{14} = 0$$

$$y_7 - y_8 - y_{12} - 4y_{14} = 0$$

$$2y_1 + 3y_2 + y_3 + 4y_4 - 10y_7 - 8y_8 = 0$$

$$\sum_{i=1}^{13} y_i - Ky_{14} = 0$$

$$\sum_{i=1}^{14} y_i = 1$$

with: all variables nonnegative

6. Introduction of the artificial variable with appropriate constraint coefficients.

minimize: y_{15}

subject to:

$$4y_1 + 3y_2 + y_3 + y_4 + y_5 - 10y_{14} = 0$$

$$3y_1 + 2y_3 - y_4 + y_6 - 8y_{14} + 3y_{15} = 0$$

$$4y_7 + 3y_8 - y_9 - 2y_{14} - 4y_{15} = 0$$

$$3y_7 + 2y_8 - y_{10} - 3y_{14} - y_{15} = 0$$

$$y_7 - y_{11} - y_{14} + y_{15} = 0$$

$$y_7 - y_8 - y_{12} - 4y_{14} + 5y_{15} = 0$$

$$2y_1 + 3y_2 + y_3 + 4y_4 - 10y_7 - 8y_8 + 8y_{15} = 0$$

$$\sum_{i=1}^{13} y_i - Ky_{14} + (K-13)y_{15} = 0$$

$$\sum_{i=1}^{15} y_i = 1$$

with: all variables nonnegative

Supplementary Problems

Use the revised simplex method to solve the following problems.

5.18

$$\begin{aligned} \text{maximize:} \quad & z = 6x_1 + 3x_2 + 4x_3 \\ \text{subject to:} \quad & x_1 + 6x_2 + x_3 \le 10 \\ & 2x_1 + 3x_2 + x_3 \le 15 \\ \text{with:} \quad & \text{all variables nonnegative} \end{aligned}$$

5.19

$$\begin{aligned} \text{maximize:} \quad & z = 3x_1 + 2x_2 + x_3 \\ \text{subject to:} \quad & 3x_1 + 2x_2 \le 7 \\ & -2x_1 + 3x_3 \le 1 \\ & 3x_1 + x_2 + 2x_3 \le 8 \\ \text{with:} \quad & \text{all variables nonnegative} \end{aligned}$$

5.20

$$\begin{aligned} \text{maximize:} \quad & z = x_1 + 3x_2 + 5x_3 \\ \text{subject to:} \quad & -2x_1 + x_3 \le 1 \\ & 3x_1 + 2x_2 + x_3 \le 9 \\ & 2x_1 + x_2 + 2x_3 \le 6 \\ \text{with:} \quad & \text{all variables nonnegative} \end{aligned}$$

5.21

$$\begin{aligned} \text{maximize:} \quad & z = 5x_1 + 3x_2 \\ \text{subject to:} \quad & 2x_1 + 3x_2 \le 9 \\ & -4x_1 + 2x_2 \le 1 \\ & 3x_1 + x_2 \le 6 \\ & x_1 \le 3 \\ \text{with:} \quad & x_1 \text{ and } x_2 \text{ nonnegative} \end{aligned}$$

5.22

$$\begin{aligned} \text{maximize:} \quad & z = 5x_1 - x_2 + 4x_3 \\ \text{subject to:} \quad & 3x_1 - 2x_2 + x_3 \le 3 \\ & x_1 + 3x_3 \le 5 \\ \text{with:} \quad & \text{all variables nonnegative} \end{aligned}$$

5.23

$$\begin{aligned} \text{minimize:} \quad & z = 6x_1 + 3x_2 + 4x_3 \\ \text{subject to:} \quad & x_1 + 6x_2 + x_3 = 10 \\ & 2x_1 + 3x_2 + x_3 = 15 \\ \text{with:} \quad & \text{all variables nonnegative} \end{aligned}$$

5.24

$$\begin{aligned} \text{minimize:}\quad & z = x_1 - 2x_2 - x_3 \\ \text{subject to:}\quad & x_1 + x_2 + x_3 \le 6 \\ & x_1 - 2x_2 \le 4 \\ \text{with:}\quad & \text{all variables nonnegative} \end{aligned}$$

5.25

$$\begin{aligned} \text{minimize:}\quad & z = x_1 + 2x_2 \\ \text{subject to:}\quad & x_1 + 3x_2 = 3 \\ & 3x_1 + 4x_2 \ge 6 \\ & 2x_1 + x_2 \le 3 \\ \text{with:}\quad & x_1 \text{ and } x_2 \text{ nonnegative} \end{aligned}$$

5.26

$$\begin{aligned} \text{minimize:}\quad & z = 10x_1 + 2x_2 - x_3 \\ \text{subject to:}\quad & x_1 + x_2 \le 50 \\ & x_1 + x_2 \ge 10 \\ & x_2 + x_3 \le 30 \\ & x_2 + x_3 \ge 7 \\ & x_1 + x_2 + x_3 = 60 \\ \text{with:}\quad & \text{all variables nonnegative} \end{aligned}$$

5.27

$$\begin{aligned} \text{minimize:}\quad & z = x_1 + x_2 + 2x_3 \\ \text{subject to:}\quad & x_1 + x_3 \le 15 \\ & x_1 - x_2 + 5x_3 \ge 10 \\ & 2x_1 + 2x_2 - x_3 \ge 10 \\ \text{with:}\quad & \text{all variables nonnegative} \end{aligned}$$

Carry out the first two iterations of Karmarkar's algorithm for the following problems.

5.28

$$\begin{aligned} \text{minimize:}\quad & z = x_1 \\ \text{subject to:}\quad & x_1 + x_2 - 2x_3 = 0 \\ & x_1 + x_2 + x_3 = 1 \\ \text{with:}\quad & \text{all variables nonnegative} \end{aligned}$$

5.29

$$\begin{aligned} \text{minimize:}\quad & z = x_2 \\ \text{subject to:}\quad & x_1 + x_2 - 2x_3 = 0 \\ & x_1 + x_2 + x_3 = 1 \\ \text{with:}\quad & \text{all variables nonnegative} \end{aligned}$$

5.30

$$\begin{aligned} \text{minimize:}\quad & z = x_2 \\ \text{subject to:}\quad & 2x_1 - x_2 - x_3 = 0 \\ & x_1 + x_2 + x_3 = 1 \\ \text{with:}\quad & \text{all variables nonnegative} \end{aligned}$$

5.31

$$\begin{aligned} \text{minimize:}\quad & z = 2x_2 + x_3 - 2x_4 \\ \text{subject to:}\quad & x_1 - 2x_2 - x_3 + 2x_4 = 0 \\ & x_1 \qquad\quad + x_3 - 2x_4 = 0 \\ & x_1 + x_2 + x_3 + x_4 = 1 \\ \text{with:}\quad & \text{all variables nonnegative} \end{aligned}$$

5.32

$$\begin{aligned} \text{minimize:}\quad & z = -x_1 + x_3 + x_4 \\ \text{subject to:}\quad & x_1 + x_2 - x_3 - x_4 = 0 \\ & x_1 + x_2 + x_3 - 3x_4 = 0 \\ & x_1 + x_2 + x_3 + x_4 = 1 \\ \text{with:}\quad & \text{all variables nonnegative} \end{aligned}$$

5.33

$$\begin{aligned} \text{minimize:}\quad & z = x_1 - 3x_2 + 5x_3 \\ \text{subject to:}\quad & x_1 - x_2 + x_3 - x_4 = 0 \\ & 3x_1 - 2x_2 + x_3 - 2x_4 = 0 \\ & x_1 + x_2 + x_3 + x_4 = 1 \\ \text{with:}\quad & \text{all variables nonnegative} \end{aligned}$$

5.34

$$\begin{aligned} \text{minimize:}\quad & z = x_1 + x_3 + x_4 - 2x_5 \\ \text{subject to:}\quad & x_1 - x_2 + x_3 + x_4 - 2x_5 = 0 \\ & x_1 - x_2 + 2x_3 \qquad - 2x_5 = 0 \\ & x_1 + x_2 + x_3 + x_4 + x_5 = 1 \\ \text{with:}\quad & \text{all variables nonnegative} \end{aligned}$$

5.35

$$\begin{aligned} \text{minimize:}\quad & z = x_1 + 3x_3 - 2x_5 \\ \text{subject to:}\quad & x_1 - 2x_2 + 3x_3 \qquad - 2x_5 = 0 \\ & 2x_1 + x_2 \qquad - x_4 - 2x_5 = 0 \\ & x_1 + x_2 + x_3 + x_4 + x_5 = 1 \\ \text{with:}\quad & \text{all variables nonnegative} \end{aligned}$$

Convert the following problems into Karmarkar's special form.

5.36

$$\begin{aligned} \text{minimize:}\quad & z = x_1 + 2x_2 \\ \text{subject to:}\quad & x_1 + 3x_2 \geq 11 \\ & 2x_1 + x_2 \geq 9 \\ \text{with:}\quad & x_1 \text{ and } x_2 \text{ nonnegative} \end{aligned}$$

5.37

$$\begin{aligned} \text{maximize:}\quad & z = 2x_1 + x_2 \\ \text{subject to:}\quad & x_1 + x_2 \leq 3 \\ & 2x_1 + x_2 \leq 5 \\ & x_1 + 3x_2 \leq 6 \\ \text{with:}\quad & x_1 \text{ and } x_2 \text{ nonnegative} \end{aligned}$$

5.38

$$\begin{aligned} \text{maximize:} \quad & z = 5x_1 + 3x_2 \\ \text{subject to:} \quad & 2x_1 + 3x_2 \le 9 \\ & -4x_1 + 2x_2 \le 1 \\ & 3x_1 + x_2 \le 6 \\ & x_1 \le 3 \\ \text{with:} \quad & x_1 \text{ and } x_2 \text{ nonnegative} \end{aligned}$$

5.39

$$\begin{aligned} \text{maximize:} \quad & z = 5x_1 - x_2 + 4x_3 \\ \text{subject to:} \quad & 3x_1 - 2x_2 + x_3 \le 3 \\ & x_1 + 3x_3 \le 5 \\ \text{with:} \quad & \text{all variables nonnegative} \end{aligned}$$

5.40

$$\begin{aligned} \text{minimize:} \quad & z = x_1 - 2x_2 - x_3 \\ \text{subject to:} \quad & x_1 + x_2 + x_3 \le 6 \\ & x_1 - 2x_2 \le 4 \\ \text{with:} \quad & \text{all variables nonnegative} \end{aligned}$$

5.41

$$\begin{aligned} \text{maximize:} \quad & z = 3x_1 + 2x_2 + x_3 \\ \text{subject to:} \quad & 3x_1 + 2x_2 \le 7 \\ & -2x_2 + 3x_3 \le 1 \\ & 3x_1 + x_2 + 2x_3 \le 8 \\ \text{with:} \quad & \text{all variables nonnegative} \end{aligned}$$

5.42

$$\begin{aligned} \text{minimize:} \quad & z = x_1 + x_2 + 2x_3 \\ \text{subject to:} \quad & x_1 + x_3 \le 15 \\ & x_1 - x_2 + 5x_3 \ge 10 \\ & 2x_1 + 2x_2 - x_3 \ge 10 \\ \text{with:} \quad & \text{all variables nonnegative} \end{aligned}$$

5.43

$$\begin{aligned} \text{minimize:} \quad & z = 3x_1 + 2x_2 + 4x_3 + 6x_4 \\ \text{subject to:} \quad & x_1 + 2x_2 + x_3 + x_4 \ge 1000 \\ & 2x_1 + x_2 + 3x_3 + 7x_4 \ge 1500 \\ \text{with:} \quad & \text{all variables nonnegative} \end{aligned}$$

5.44

$$\begin{aligned} \text{minimize:} \quad & z = 3x_1 + 2x_2 + x_3 + 2x_4 + 3x_5 \\ \text{subject to:} \quad & 2x_1 + 5x_2 + x_4 + x_5 \ge 6 \\ & 4x_2 - 2x_3 + 2x_4 + 3x_5 \ge 5 \\ & x_1 - 6x_2 + 3x_3 + 7x_4 + 5x_5 \le 7 \\ \text{with:} \quad & \text{all variables nonnegative} \end{aligned}$$

Chapter 6

Integer Programming: Branch-and-Bound Algorithm

FIRST APPROXIMATION

An integer program is a linear program with the added requirement that all variables be integers (see Chapter 1). Therefore, a *first approximation* to the solution of any integer program may be obtained by ignoring the integer requirement and solving the resulting linear program by one of the techniques already presented. If the optimal solution to the linear program happens to be integral, then this solution is also the optimal solution to the original integer program (see Problem 6.3). Otherwise—and this is the usual situation—one may round the components of the first approximation to the nearest feasible integers and obtain a *second approximation*. This procedure is often carried out, especially when the first approximation involves large numbers, but it can be inaccurate when the numbers are small (see Problem 6.5).

BRANCHING

If the first approximation contains a variable that is not integral, say x_j^*, then $i_1 < x_j^* < i_2$, where i_1 and i_2 are consecutive, nonnegative integers. Two new integer programs are then created by augmenting the original integer program with either the constraint $x_j \le i_1$ or the constraint $x_j \ge i_2$. This process, called *branching*, has the effect of shrinking the feasible region in a way that eliminates from further consideration the current nonintegral solution for x_j but still preserves all possible integral solutions to the original problem. (See Problem 6.8.)

Example 6.1 As a first approximation to the integer program

$$\begin{aligned} \text{maximize:}\quad & z = 10x_1 + x_2 \\ \text{subject to:}\quad & 2x_1 + 5x_2 \le 11 \\ \text{with:}\quad & x_1 \text{ and } x_2 \text{ nonnegative and integral} \end{aligned} \tag{6.1}$$

we consider the associated linear program obtained by deleting the integral requirement. By graphing, the solution is readily found to be $x_1^* = 5.5$, $x_2^* = 0$, with $z^* = 55$. Since $5 < x_1^* < 6$, branching creates the two new integer programs

$$\begin{aligned} \text{maximize:}\quad & z = 10x_1 + x_2 \\ \text{subject to:}\quad & 2x_1 + 5x_2 \le 11 \\ & x_1 \qquad \le 5 \\ \text{with:}\quad & x_1 \text{ and } x_2 \text{ nonnegative and integral} \end{aligned} \tag{6.2}$$

$$\begin{aligned} \text{maximize:}\quad & z = 10x_1 + x_2 \\ \text{subject to:}\quad & 2x_1 + 5x_2 \le 11 \\ & x_1 \qquad \ge 6 \\ \text{with:}\quad & x_1 \text{ and } x_2 \text{ nonnegative and integral} \end{aligned} \tag{6.3}$$

For the two integer programs created by the branching process, first approximations are obtained by again ignoring the integer requirements and solving the resulting linear programs. If either first

approximation is still nonintegral, then the integer program which gave rise to that first approximation becomes a candidate for further branching.

Example 6.2 Using graphical methods, we find that program (6.2) has the first approximation $x_1^* = 5$, $x_2^* = 0.2$, with $z^* = 50.2$, while program (6.3) has no feasible solution. Thus, program (6.2) is a candidate for further branching. Since $0 < x_2^* < 1$, we augment (6.2) with either $x_2 \le 0$ or $x_2 \ge 1$, and obtain the two new programs

$$\begin{aligned} \text{maximize:}\quad & z = 10x_1 + x_2 \\ \text{subject to:}\quad & 2x_1 + 5x_2 \le 11 \\ & x_1 \le 5 \\ & x_2 \le 0 \\ \text{with:}\quad & x_1 \text{ and } x_2 \text{ nonnegative and integral} \end{aligned} \tag{6.4}$$

(in which $x_2 = 0$ is forced) and

$$\begin{aligned} \text{maximize:}\quad & z = 10x_1 + x_2 \\ \text{subject to:}\quad & 2x_1 + 5x_2 \le 11 \\ & x_1 \le 5 \\ & x_2 \ge 1 \\ \text{with:}\quad & x_1 \text{ and } x_2 \text{ nonnegative and integral} \end{aligned} \tag{6.5}$$

With the integer requirements ignored, the solution to program (6.4) is $x_1^* = 5$, $x_2^* = 0$, with $z^* = 50$, while the solution to program (6.5) is $x_1^* = 3$, $x_2^* = 1$, with $z^* = 31$. Since both these first approximations are integral, no further branching is required.

BOUNDING

Assume that the objective function is to be *maximized*. Branching continues until an integral first approximation (which is thus an integral solution) is obtained. The value of the objective for this first integral solution becomes a lower bound for the problem, and all programs whose first approximations, integral or not, yield values of the objective function smaller than the lower bound are discarded.

Example 6.3 Program (6.4) possesses an integral solution with $z^* = 50$; hence 50 becomes a lower bound for the problem. Program (6.5) has a solution with $z^* = 31$. Since 31 is less than the lower bound 50, program (6.5) is eliminated from further consideration, *and would have been so eliminated even if its first approximation had been nonintegral.*

Branching continues from those programs having nonintegral first approximations that give values of the objective function greater than the lower bound. If, in the process, a new integral solution is uncovered having a value of the objective function greater than the current lower bound, then this value of the objective function becomes the new lower bound. The program that yielded the old lower bound is eliminated, as are all programs whose first approximations give values of the objective function smaller than the new lower bound. The branching process continues until there are no programs with nonintegral first approximations remaining under consideration. At this point, the current lower-bound solution is the optimal solution to the original integer program.

If the objective function is to be *minimized*, the procedure remains the same, except that upper bounds are used. Thus, the value of the first integral solution becomes an upper bound for the problem, and programs are eliminated when their first approximate z-values are greater than the current upper bound.

COMPUTATIONAL CONSIDERATIONS

One always branches from that program which appears most nearly optimal. When there are a number of candidates for further branching, one chooses that having the largest z-value, if the objective function is to be maximized, or that having the smallest z-value, if the objective function is to be minimized.

Additional constraints are added one at a time. If a first approximation involves more than one nonintegral variable, the new constraints are imposed on that variable which is furthest from being an integer; i.e., that variable whose fractional part is closest to 0.5. In case of a tie, the solver arbitrarily chooses one of the variables.

Finally, it is possible for an integer program or an associated linear program to have more than one optimal solution. In both cases, we adhere to the convention adopted in Chapter 1, arbitrarily designating one of the solutions as the optimal one and disregarding the rest.

Solved Problems

6.1 Draw a schematic diagram (tree) depicting the results of Examples 6.1 through 6.3.

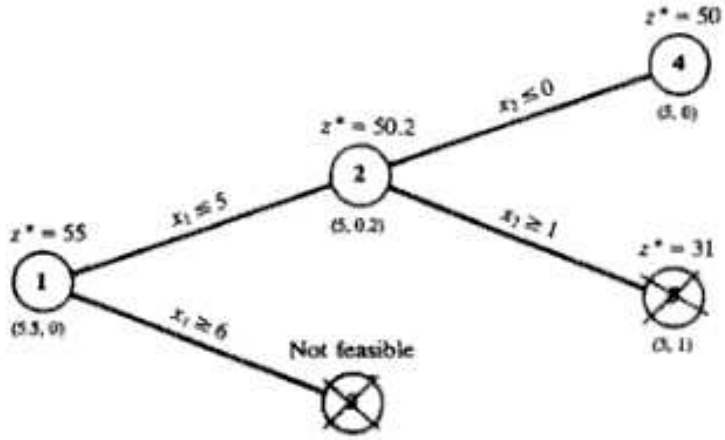

Fig. 6-1

See Fig. 6-1. The original integer program, here (*6.1*), is designated by a circled 1, and all other programs formed through branching are designated in the order of their creation by circled successive integers. Thus, programs (*6.2*) through (*6.5*) are designated by circled 2 through 5, respectively. The first approximate solution to each program is written by the circle designating the program. Each circle (program) is then connected by a line to that circle (program) which generated it via the branching process. The new constraint that defined the branch is written above the line. Finally, a large cross is drawn through a circle if the corresponding program has been eliminated from further consideration. Hence, branch 3 was eliminated because it was not feasible; branch 5 was eliminated by bounding in Example 6.3. Since there are no nonintegral branches left to consider, the schematic diagram indicates that program 1 is solved with $x_1^* = 5$, $x_2^* = 0$, and $z^* = 50$.

6.2

$$\begin{aligned} \text{maximize:} \quad & z = 3x_1 + 4x_2 \\ \text{subject to:} \quad & 2x_1 + x_2 \le 6 \\ & 2x_1 + 3x_2 \le 9 \\ \text{with:} \quad & x_1 \text{ and } x_2 \text{ nonnegative and integral} \end{aligned}$$

Neglecting the integer requirement, we obtain $x_1^* = 2.25$, $x_2^* = 1.5$, with $z^* = 12.75$, as the solution to the associated linear program. Since x_2^* is further from an integral value than x_1^*, we use it to generate the branches $x_2 \le 1$ and $x_2 \ge 2$.

Program 2

$$\begin{aligned} \text{maximize:}\quad & z = 3x_1 + 4x_2 \\ \text{subject to:}\quad & 2x_1 + x_2 \le 6 \\ & 2x_1 + 3x_2 \le 9 \\ & x_2 \le 1 \\ \text{with:}\quad & x_1, x_2 \text{ nonnegative and integral} \end{aligned}$$

Program 3

$$\begin{aligned} \text{maximize:}\quad & z = 3x_1 + 4x_2 \\ \text{subject to:}\quad & 2x_1 + x_2 \le 6 \\ & 2x_1 + 3x_2 \le 9 \\ & x_2 \ge 2 \\ \text{with:}\quad & x_1, x_2 \text{ nonnegative and integral} \end{aligned}$$

The first approximation to Program 2 is $x_1^* = 2.5$, $x_2^* = 1$, with $z^* = 11.5$; the first approximation to Program 3 is $x_1^* = 1.5$, $x_2^* = 2$, with $z^* = 12.5$. These results are shown in Fig. 6-2. Since Programs 2 and 3 both have nonintegral first approximations, we could branch from either one; we choose Program 3 because it has the larger (more nearly optimal) value of the objective function. Here $1 < x_1^* < 2$, so the new programs are

Program 4

$$\begin{aligned} \text{maximize:}\quad & z = 3x_1 + 4x_2 \\ \text{subject to:}\quad & 2x_1 + x_2 \le 6 \\ & 2x_1 + 3x_2 \le 9 \\ & x_2 \ge 2 \\ & x_1 \le 1 \\ \text{with:}\quad & x_1, x_2 \text{ nonnegative and integral} \end{aligned}$$

Program 5

$$\begin{aligned} \text{maximize:}\quad & z = 3x_1 + 4x_2 \\ \text{subject to:}\quad & 2x_1 + x_2 \le 6 \\ & 2x_1 + 3x_2 \le 9 \\ & x_2 \ge 2 \\ & x_1 \ge 2 \\ \text{with:}\quad & x_1, x_2 \text{ nonnegative and integral} \end{aligned}$$

There is no solution to Program 5 (it is infeasible), while the solution to Program 4 with the integer constraints ignored is $x_1^* = 1$, $x_2^* = 7/3$, with $z^* = 12.33$. See Fig. 6-2. The branching can continue from either Program 2 or Program 4; we choose Program 4 since it has the greater z-value. Here $2 < x_2^* < 3$, so

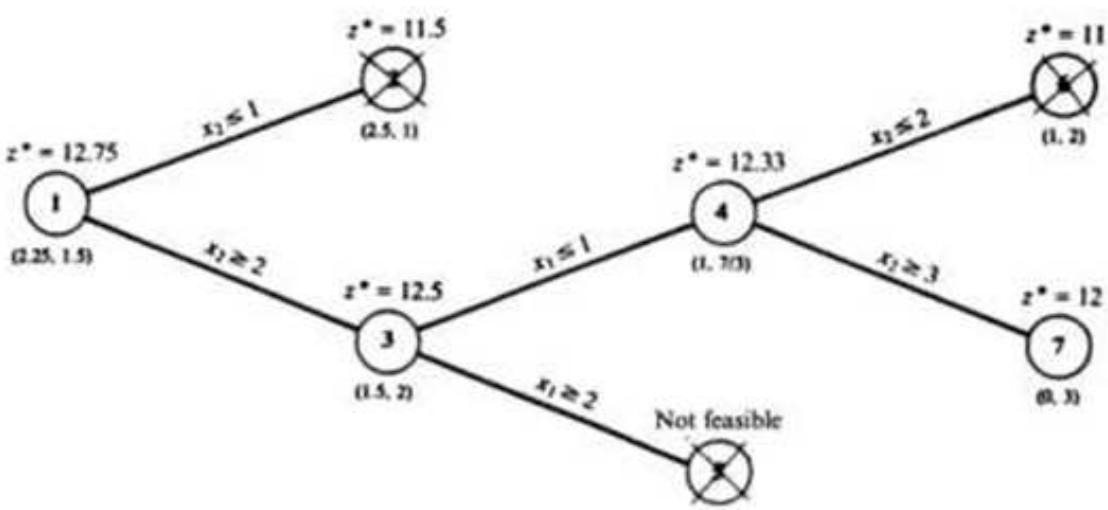

Fig. 6-2

the new programs are

Program 6

$$\begin{aligned} \text{maximize:}\quad & z = 3x_1 + 4x_2 \\ \text{subject to:}\quad & 2x_1 + x_2 \le 6 \\ & 2x_1 + 3x_2 \le 9 \\ & x_2 \ge 2 \\ & x_1 \le 1 \\ & x_2 \le 2 \\ \text{with:}\quad & x_1, x_2 \text{ nonnegative and integral} \end{aligned}$$

Program 7

$$\begin{aligned} \text{maximize:}\quad & z = 3x_1 + 4x_2 \\ \text{subject to:}\quad & 2x_1 + x_2 \le 6 \\ & 2x_1 + 3x_2 \le 9 \\ & x_2 \ge 2 \\ & x_1 \le 1 \\ & x_2 \ge 3 \\ \text{with:}\quad & x_1, x_2 \text{ nonnegative and integral} \end{aligned}$$

The solution to Program 6 with the integer constraints ignored is $x_1^* = 1$, $x_2^* = 2$, with $z^* = 11$. Since this is an integral solution, $z = 11$ becomes a lower bound for the problem; any program yielding a z-value smaller than 11 will henceforth be eliminated. The first approximation to Problem 7 is $x_1^* = 0$, $x_2^* = 3$, with $z^* = 12$. Since this is an integral solution with a z-value greater than the current lower bound, $z = 12$ becomes the new lower bound, and the program that generated the old lower bound, Program 6, is eliminated from further consideration, as is Program 2. Figure 6-2 now shows no branches left to consider other than the one corresponding to the current lower bound. Consequently, this branch gives the optimal solution to Program 1: $x_1^* = 0$, $x_2^* = 3$, with $z^* = 12$.

6.3 Solve Problem 1.9.

Dropping the integer requirements from program (*1*) of Problem 1.9, we solve the associated linear program first, to find (see Problem 5.4): $x_1^* = 2$, $x_2^* = 18$, $x_3^* = 0$, $x_4^* = 20$, $x_5^* = 0$, $x_6^* = 5$, with $z^* = 45$. This is the first approximation. Since it is integral, however, it is also the optimal solution to the original integer program.

6.4 Solve Problem 1.6.

Ignoring the integer requirements in program (*4*) of Problem 1.6, we obtain $x_1^* = x_2^* = 0$, $x_3^* = 1666.67$, $x_4^* = 5000$, with $z^* = 55\,000$, as the first approximation. Since x_3^* is not integral, we branch to two new programs, and solve each with the integer constraints ignored. The results are indicated in Fig. 6-3. Program 3 possesses an integral solution with a z-value greater than the z-value of Program 2. Consequently, we eliminate Program 2 and accept the solution to Program 3 as the optimal one: $x_1^* = 1$, $x_2^* = 0$, $x_3^* = 1667$, $x_4^* = 4999$, with $z^* = \$55\,000$.

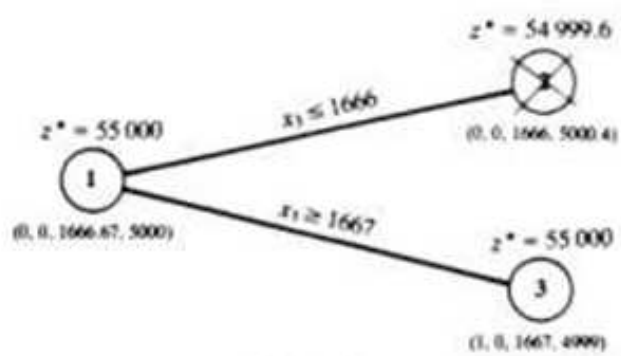

Fig. 6-3

6.5 Discuss the errors involved in rounding the first approximations to the original programs in Problems 6.2 and 6.4 to integers and then taking these answers as the optimal ones.

The first approximatiom in Problem 6.2 was $x_1^* = 2.25$, $x_2^* = 1.5$. We wish to round to the closest integer point *in the feasible region*. Now, of the four integer points surrounding the first approximation, only one, (2, 1), is found to lie in the feasible region. Thus we take $x_1^* = 2$, $x_2^* = 1$, with a corresponding $z^* = 10$, as the proposed optimal solution. The true optimal solution was found as $z^* = 12$; thus the rounded solution deviates from the true solution by more than 16 percent.

The first approximation in Problem 6.4 was $x_1^* = x_2^* = 0$, $x_3^* = 1666.67$, $x_4^* = 5000$. Rounding x_3^* down, to remain feasible, we obtain $x_1^* = x_2^* = 0$, $x_3^* = 1666$, $x_4^* = 5000$ as the estimated coordinates of the optimal solution. The corresponding z-value, \$54 996, deviates from the true solution, $z^* = \$55\,000$, by less than 0.008 percent.

6.6

$$\begin{aligned} \text{minimize:} \quad & z = x_1 + x_2 \\ \text{subject to:} \quad & 2x_1 + 2x_2 \geq 5 \\ & 12x_1 + 5x_2 \leq 30 \\ \text{with:} \quad & x_1 \text{ and } x_2 \text{ nonnegative and integral} \end{aligned}$$

A first approximation to this program is $x_1^* = 2.5$, $x_2^* = 0$, with $z^* = 2.5$. Rounding x_1^* up, thereby remaining feasible, we have $x_1^* = 3$, $x_2^* = 0$, with $z^* = 3$, as an estimate of the optimal solution to the original program. Observe, however, that for integral values of the variables, the objective function must itself be integral. The z-value for the first approximation, $z^* = 2.5$, provides a lower bound for the optimal objective; consequently, the optimal objective cannot be smaller than 3. Since we have an estimate which attains the value 3, the estimate must be optimal; i.e., $x_1^* = 3$, $x_2^* = 0$, with $z^* = 3$.

6.7 Solve the *knapsack problem* formulated in Problem 1.8.

The simplex method could be used to find the first approximation for program (*3*) of Problem 1.8. A more efficient procedure is the following:

The critical factor in determining whether an item is taken is not its weight or value per se but the ratio of the two, its value per pound. We denote this factor as *desirability*, adjoin it to the data, and construct Table 6-1, where the items are listed in order of decreasing desirability. To obtain the optimal solution to the knapsack problem with the integer constraints ignored, we simply take as much of each item as possible (without exceeding the 60-lb weight limit), beginning with the most desirable. It follows from Table 6-1 that the first approximation consists in all of item 2 (the most desirable one), all of item 5 (the next most desirable item), and 30 lb of item 3: $x_1^* = 0$, $x_2^* = 1$, $x_3^* = 30/35$, $x_4^* = 0$, $x_5^* = 1$, with $z^* = 135$.

Table 6-1

Item	Weight, lb	Value	Desirability, value/lb
2	23	60	2.61
5	7	15	2.14
3	35	70	2.00
1	52	100	1.92
4	15	15	1.00

Since this first approximation is nonintegral, we branch by augmenting the original constraints with either $x_3 \leq 0$ or $x_3 \geq 1$. Before doing so, however, we note that since x_3 is required to be nonnegative, the constraint $x_3 \leq 0$ can be tightened to $x_3 = 0$; and since at most one of an item will be taken, the constraint $x_3 \geq 1$ can be tightened to $x_3 = 1$. This is indicated in the tree diagram, Fig. 6-4.

Dropping the integer requirements, we determine the optimal solutions to both Programs 2 and 3 in Fig. 6-4, using Table 6-1 to find the best mix consistent with the constraints. For Program 2, we obtain $x_1^* = 30/52$, $x_2^* = 1$, $x_3^* = 0$, $x_4^* = 0$, $x_5^* = 1$, with $z^* = 132.69$; and for Program 3, $x_1^* = 0$, $x_2^* = 1$, $x_3^* = 1$, $x_4^* = 0$, $x_5^* = 2/7$, with $z^* = 134.28$.

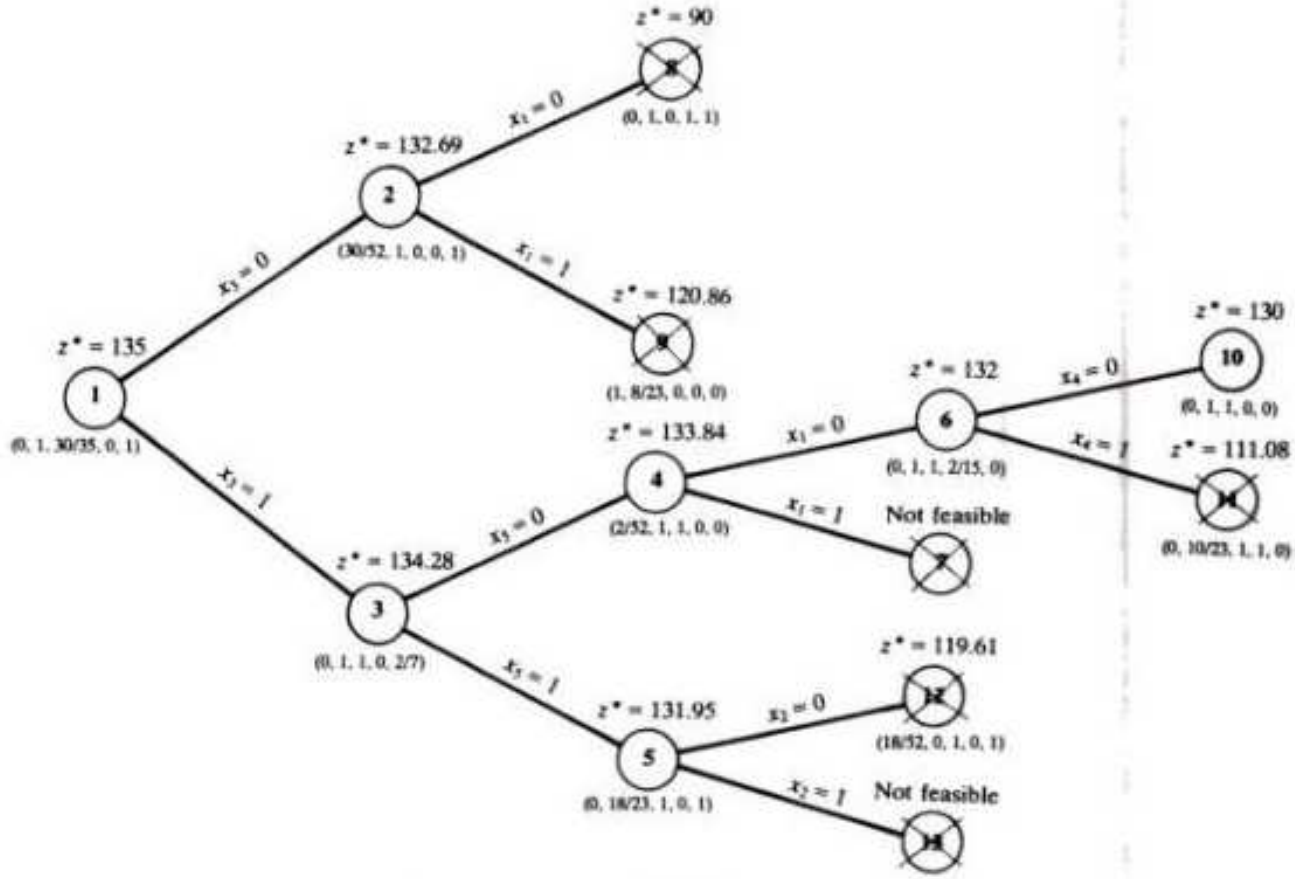

Fig. 6-4

Continuing the branch-and-bound process, we complete Fig. 6-4. The first integral solution is obtained in Program 8, with $z^* = 90$. A second integral solution is obtained in Program 10, with $z^* = 130$. Since this second z-value is larger than the first, we eliminate Program 8, as well as Programs 9 and 11. Program 5, however, possesses a z-value greater than the current lower bound, so that we must still branch from it. The resulting Program 12 has a z-value smaller than 130, while Program 13 is infeasible; hence they too are eliminated. We remain with only Program 10; therefore, its solution—take only items 2 and 3, for a total value of 130—is the optimal solution.

Much of the branch-and-bound process might have been avoided. We know in advance that either $x_3 = 0$ or $x_3 = 1$ in the optimal solution. If $x_3 = 0$, then Program 2 coincides with the original program, and the z-value 132.69 obtained when the integer requirements are dropped (thereby expanding the feasible region) must be greater than, or at least equal to, the true optimum. Similarly, if $x_3 = 1$, we see from Program 3 that the true optimum cannot exceed 134.28. Whichever the case, we are assured that the true optimum is less than 135. But, for integral values of the variables, z is integral; in fact, it is a multiple of 5, since the values of the items are multiples of 5. Therefore, the true optimum is at most 130. Now, rounding the first approximate solution to Program 3 gives $x_1^* = 0, x_2^* = 1, x_3^* = 1, x_4^* = 0, x_5^* = 0$, with $z^* = 130$. Consequently, this solution is optimal.

6.8 Discuss the geometrical significance of making the first branch in Problem 6.2.

The feasible region for Problem 6.2 with the integer requirements ignored is the shaded region in Fig. 6-5(a); the feasible region for Problem 6.2 as given is the set of all integer points (marked with crosses) belonging to the shaded region. The first approximation is the circled extreme point.

As a result of branching, the feasible region for Program 2, with the integer constraints ignored, is Region I in Fig. 6-5(b), whereas Region II in the same figure represents the feasible region for Program 3 with the integer requirements neglected. Observe that Regions I and II together contain all the feasible integer points of Fig. 6-5(a), and only those integer points. Hence, if the original integer program has an

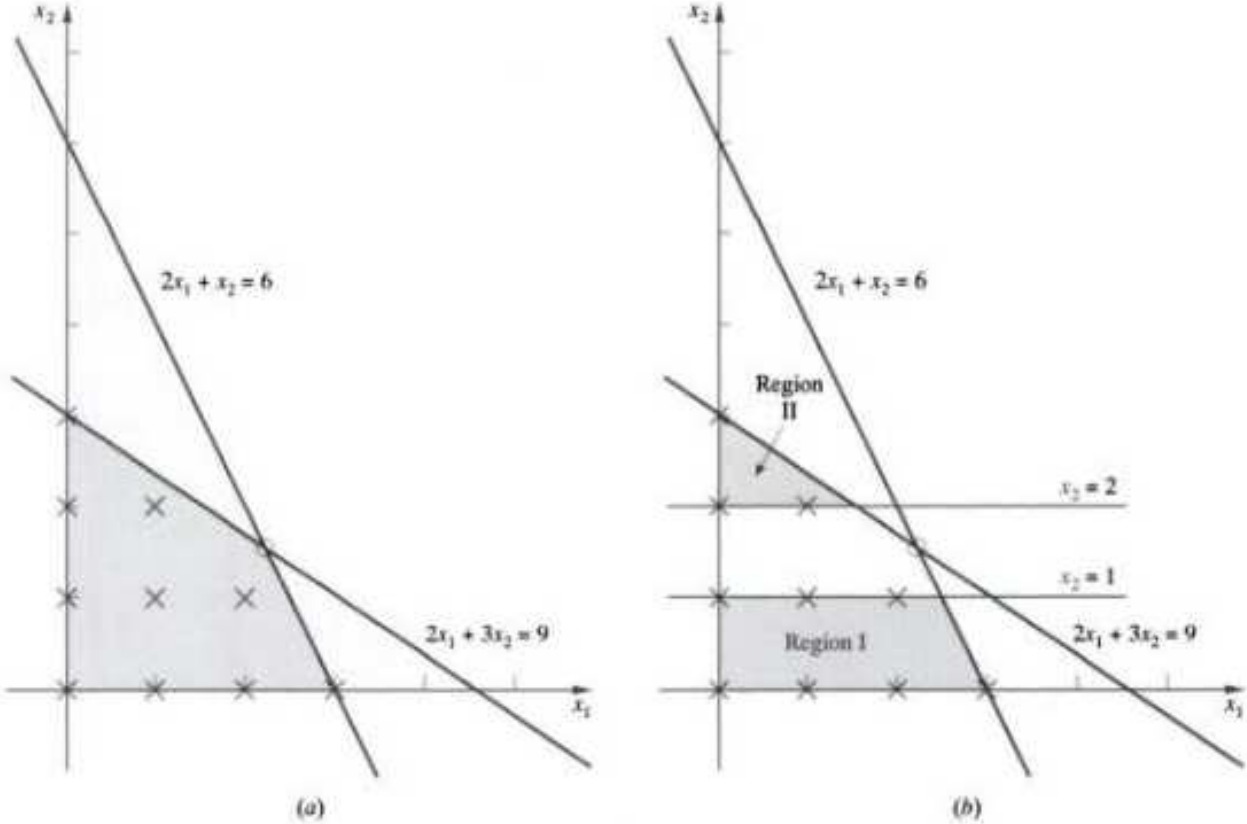

Fig. 6-5

optimal solution (as it does, in this case), that solution will be optimal for one of the two new integer programs. Conversely, *if the two new integer programs have optimal solutions, one of these solutions (the one with the larger z-value, in the case of a maximization problem) will be optimal for the original integer program.* The validity of the bounding technique follows from the parenthetical remark just made.

Supplementary Problems

Solve the following problems by use of the branch-and-bound algorithm.

6.9

$$\begin{aligned} \text{maximize:}\quad & z = x_1 + 2x_2 + x_3 \\ \text{subject to:}\quad & 2x_1 + 3x_2 + 3x_3 \le 11 \\ \text{with:}\quad & \text{all variables nonnegative and integral} \end{aligned}$$

6.10

$$\begin{aligned} \text{maximize:}\quad & z = x_1 + 2x_2 + 3x_3 + x_4 \\ \text{subject to:}\quad & 3x_1 + 2x_2 + x_3 + 4x_4 \le 10 \\ & 5x_1 + 3x_2 + 2x_3 + 5x_4 \le 5 \\ \text{with:}\quad & \text{all variables nonnegative and integral} \end{aligned}$$

6.11

$$\begin{aligned} \text{maximize:}\quad & z = 2x_1 + 10x_2 + x_3 \\ \text{subject to:}\quad & 5x_1 + 2x_2 + x_3 \le 15 \\ & 2x_1 + x_2 + 7x_3 \le 20 \\ & x_1 + 3x_2 + 2x_3 \le 25 \\ \text{with:}\quad & \text{all variables nonnegative and integral} \end{aligned}$$

6.12

$$\begin{aligned} \text{minimize:} \quad & z = 10x_1 + 2x_2 + 11x_3 \\ \text{subject to:} \quad & 2x_1 + 7x_2 + x_3 = 4 \\ & 5x_1 + 8x_2 - 2x_3 = 17 \\ \text{with:} \quad & \text{all variables nonnegative and integral} \end{aligned}$$

6.13 Problem 1.20.

6.14 Solve Problem 6.7 by applying the branch-and-bound algorithm directly to program (*3*) of Problem 1.8 and compare this procedure with the approach taken in Problem 6.7.

Chapter 7

Integer Programming: Cut Algorithms

At each stage of branching in the branch-and-bound algorithm the current feasible region (for the current program with integer restrictions ignored) is *cut* into two smaller regions (one of them may be empty) by the imposition of two new constraints derived from the first approximation to the current program. This splitting is such that the optimal solution to the current program must show up as the optimal solution to one of the two new programs (Problem 6.8). The cut algorithms of the present chapter operate essentially in like fashion, the only difference being that a single new constraint is added at each stage, whereby the feasible region is diminished without being split.

THE GOMORY ALGORITHM

The new constraints are determined by the following three-step procedure. (See Problem 7.5.)

STEP 1: In the current final simplex tableau, select one (any one) of the nonintegral variables and, *without assigning zero values to the nonbasic variables*, consider the constraint equation represented by the row of the selected variable.

Example 7.1 The simplex tableau

	x_1	x_2	x_3	x_4	x_5	
x_3	$-1/2$	0	1	$-7/3$	1/2	11/2
x_2	1/2	1	0	-1	1/4	1
	4	0	0	1	3/4	25/2

gives the optimal solution (i.e., the current first approximation) as $x_3^* = 11/2$, $x_2^* = 1$, with each of the nonbasic variables x_1^*, x_4^*, and x_5^* set equal to zero. The noninteger assignment for x_3^* came from the first row of the tableau, which represents the constraint

$$-\tfrac{1}{2}x_1 + x_3 - \tfrac{7}{3}x_4 + \tfrac{1}{2}x_5 = \tfrac{11}{2} \tag{7.1}$$

STEP 2: Rewrite each fractional coefficient and constant in the constraint equation obtained from Step 1 as the sum of an integer and a *positive* fraction between 0 and 1. Then rewrite the equation so that the left-hand side contains only terms with fractional coefficients (and a fractional constant), while the right-hand side contains only terms with integral coefficients (and an integral constant).

Example 7.2 Equation (7.1) becomes

$$(-1 + \tfrac{1}{2})x_1 + x_3 + (-3 + \tfrac{2}{3})x_4 + (0 + \tfrac{1}{2})x_5 = 5 + \tfrac{1}{2}$$

or

$$\tfrac{1}{2}x_1 + \tfrac{2}{3}x_4 + \tfrac{1}{2}x_5 - \tfrac{1}{2} = 5 + x_1 - x_3 + 3x_4 \tag{7.2}$$

STEP 3: Require the left-hand side of the rewritten equation to be nonnegative. The resulting inequality is the new constraint.

Example 7.3 From (7.2),

$$\tfrac{1}{2}x_1 + \tfrac{2}{3}x_4 + \tfrac{1}{2}x_5 - \tfrac{1}{2} \geq 0 \qquad \text{or} \qquad \tfrac{1}{2}x_1 + \tfrac{2}{3}x_4 + \tfrac{1}{2}x_5 \geq \tfrac{1}{2}$$

is the new constraint.

COMPUTATIONAL CONSIDERATIONS

Computing time is saved by appending the new constraint inequality obtained from Step 3 to the constraint equations described in the current final simplex tableau rather than to the algebraically equivalent constraints given in the original program. (See Problem 7.1.)

The Gomory cut algorithm may not converge; that is, an integral solution may not be obtained regardless of the number of iterations. Generally, however, if the algorithm does converge, it converges reasonably quickly. For this reason, an upper limit on the number of iterations to be attempted is often established before the computation is initiated. If the integral solution is not obtained within this bound, the algorithm is abandoned.

There are no theoretical reasons for choosing between the Gomory and branch-and-bound algorithms. The branch-and-bound algorithm is the newer of the two procedures, and appears to be favored slightly among practitioners.

Solved Problems

7.1

$$\begin{aligned} \text{maximize:} \quad & z = 2x_1 + x_2 \\ \text{subject to:} \quad & 2x_1 + 5x_2 \leq 17 \\ & 3x_1 + 2x_2 \leq 10 \\ \text{with:} \quad & x_1 \text{ and } x_2 \text{ nonnegative and integral} \end{aligned} \tag{1}$$

Ignoring the integer requirements and applying the simplex method to the resulting linear program, we obtain Tableau 1 as the optimal tableau after one iteration.

	x_1	x_2	x_3	x_4	
x_3	0	11/3	1	−2/3	31/3
x_1	1	2/3	0	1/3	10/3
	0	1/3	0	2/3	20/3

Tableau 1

	x_1	x_2	x_3	x_4	x_5	
x_3	0	0	1	−5/2	11/6	17/2
x_1	1	0	0	0	1/3	3
x_2	0	1	0	1/2	−1/2	1/2
	0	0	0	1/2	1/6	13/2

Tableau 2

The first approximation to program (1), therefore, is $x_1^* = 10/3$, $x_3^* = 31/3$, $x_2^* = x_4^* = 0$. Both x_1^* and x_3^* are nonintegral. Arbitrarily selecting x_1^*, we consider the constraint represented by the second row of Tableau 1, the row defining x_1^*; namely,

$$x_1 + \tfrac{2}{3}x_2 + \tfrac{1}{3}x_4 = \tfrac{10}{3}$$

Writing each fraction as the sum of an integer and a fraction between 0 and 1, we have

$$x_1 + (0 + \tfrac{2}{3})x_2 + (0 + \tfrac{1}{3})x_4 = 3 + \tfrac{1}{3} \qquad \text{or} \qquad \tfrac{2}{3}x_2 + \tfrac{1}{3}x_4 - \tfrac{1}{3} = 3 - x_1$$

Requiring the left-hand side of this equation to be nonnegative, we obtain

$$\tfrac{2}{3}x_2 + \tfrac{1}{3}x_4 - \tfrac{1}{3} \geq 0 \qquad \text{or} \qquad 2x_2 + x_4 \geq 1$$

as the new constraint. Rewriting the constraints of the original program (*1*) in the forms suggested by Tableau 1 and adding the new constraint, we generate the new program

$$\begin{aligned} \text{maximize:}\quad & z = 2x_1 + x_2 + 0x_3 + 0x_4 \\ \text{subject to:}\quad & \tfrac{11}{3}x_2 + x_3 - \tfrac{2}{3}x_4 = \tfrac{31}{3} \\ & x_1 + \tfrac{2}{3}x_2 \qquad + \tfrac{1}{3}x_4 = \tfrac{10}{3} \\ & 2x_2 \qquad + x_4 \geq 1 \\ \text{with:}\quad & \text{all variables nonnegative and integral} \end{aligned} \tag{2}$$

A surplus variable, x_5, and an artificial variable, x_6, are introduced into the inequality constraint of (*2*), and then the two-phase method is applied, with x_1, x_3, and x_6 as the initial set of basic variables. The optimal Tableau 2 is obtained after only one iteration. The first approximation to program (*2*) is thus $x_1^* = 3$, $x_2^* = 1/2$, $x_3^* = 17/2$, $x_4^* = x_5^* = 0$. Choosing x_2^* to generate the new constraint, we obtain from the third row of Tableau 2

$$\tfrac{1}{2}x_4 + \tfrac{1}{2}x_5 - \tfrac{1}{2} \geq 0 \qquad \text{or} \qquad x_4 + x_5 \geq 1$$

This, combined with the constraints of program (*2*) in the forms suggested by Tableau 2, gives the new integer program

$$\begin{aligned} \text{maximize:}\quad & z = 2x_1 + x_2 + 0x_3 + 0x_4 + 0x_5 \\ \text{subject to:}\quad & x_3 - \tfrac{5}{2}x_4 + \tfrac{11}{6}x_5 = \tfrac{17}{2} \\ & x_1 \qquad + \tfrac{1}{3}x_5 = 3 \\ & x_2 \qquad + \tfrac{1}{2}x_4 - \tfrac{1}{2}x_5 = \tfrac{1}{2} \\ & x_4 + x_5 \geq 1 \\ \text{with:}\quad & \text{all variables nonnegative and integral} \end{aligned} \tag{3}$$

Ignoring the integer constraint and applying the two-phase method to program (*3*), with x_1, x_2, x_3, and x_7 (artificial) as the initial basic set, we obtain the optimal Tableau 3.

	x_1	x_2	x_3	x_4	x_5	x_6	
x_3	0	0	1	−13/3	0	11/6	20/3
x_1	1	0	0	−1/3	0	1/3	8/3
x_2	0	1	0	1	0	−1/2	1
x_5	0	0	0	1	1	−1	1
	0	0	0	1/3	0	1/6	19/3

Tableau 3

A new iteration of the process is started from $x_1^* = 8/3$ in Tableau 3. This results in a program whose solution is integral, with $x_1^* = 3$, $x_2^* = 0$, and $z^* = 6$. This solution is then the optimal solution to integer program (*1*).

7.2 Discuss the geometrical significance of the first added constraint in Problem 7.1.

Initially, the feasible region consists of all points in the first quadrant having integral coordinates that satisfy

$$2x_1 + 5x_2 \leq 17 \qquad \text{and} \qquad 3x_1 + 2x_2 \leq 10$$

These are the points marked by crosses in Fig. 7-1(*a*).

The constraint added to the original program (*1*) was $2x_2 + x_4 \geq 1$; it led to program (*2*). Solving the

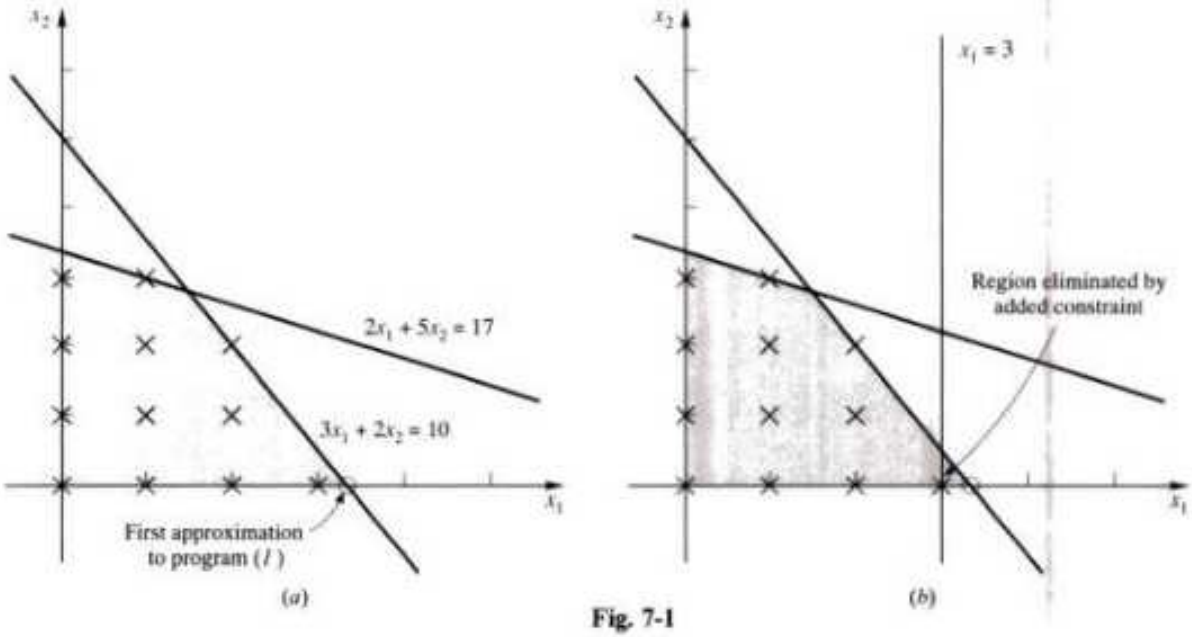

Fig. 7-1

second constraint equation of program (2) for x_4 and substituting the result into the new constraint, we have

$$2x_2 + (10 - 3x_1 - 2x_2) \geq 1 \qquad \text{or} \qquad x_1 \leq 3$$

The effect of imposing $x_1 \leq 3$ is indicated in Fig. 7-1(b): a small piece containing the current first approximation is sliced off the feasible region. No integer point, however, is lost.

7.3 Solve Problem 1.12.

The first approximation to this integer program (see Problem 3.20 with the variables relabeled) is $x_{12}^* = 700$, $x_{13}^* = 500$, $x_{21}^* = 1000$, $x_{11}^* = x_{22}^* = x_{23}^* = 0$, with $z^* = 27\,600$¢. Since this first approximation is integral, it is also the optimal solution to the integer program. Under this optimal schedule, 700 boxes will be shipped from factory 1 to retailer 2, 500 boxes from factory 1 to retailer 3, and 1000 boxes from factory 2 to retailer 1. The total shipping cost is \$276.

7.4 Solve Problem 1.5.

Program (4) of Problem 1.5, brought into standard form, is

$$\begin{array}{lll}
\text{minimize:} & z = 20x_1 + 22x_2 + 18x_3 + 0x_4 + 0x_5 + 0x_6 + 0x_7 + 0x_8 + Mx_9 + Mx_{10} & \\
\text{subject to:} & 4x_1 + 6x_2 + x_3 - x_4 + x_9 = 54 & \\
& 4x_1 + 4x_2 + 6x_3 - x_5 + x_{10} = 65 & \\
& x_1 + x_6 = 7 & (1) \\
& x_2 + x_7 = 7 & \\
& x_3 + x_8 = 7 & \\
\text{with:} & \text{all variables nonnegative and integral} &
\end{array}$$

Ignoring the integer restrictions and solving this program by the two-phase method, we obtain Tableau 1

Copyrighted m

after three iterations. The first approximation to program (*1*) is thus $x_1^* = 1.75$, $x_2^* = 7$, $x_3^* = 5$, with $z^* = 279$.

	x_1	x_2	x_3	x_4	x_5	x_6	x_7	x_8	
x_1	1	0	0	−0.3	0.005	0	−1.6	0	1.75
x_3	0	0	1	0.2	−0.2	0	0.4	0	5
x_6	0	0	0	0.3	−0.05	1	1.6	0	5.25
x_2	0	1	0	0	0	0	1	0	7
x_8	0	0	0	−0.2	0.2	0	−0.4	1	2
	0	0	0	2.4	2.6	0	2.8	0	−279

Tableau 1

Now, this first approximation may be rounded to the feasible integral solution $x_1 = 2$, $x_2 = 7$, $x_3 = 5$, with $z = 284$. It follows that the desired minimum cannot exceed 284. On the other hand, referring to the original program (*4*) of Problem 1.5, we see that for integral values of the variables z is an *even* integer; hence, in view of the lower bound $z^* = 279$ provided by the first approximation, the minimal z cannot be less than 280. Therefore, the minimal z can only be 280, 282, or 284, and we are guaranteed that the error committed in taking $(2, 7, 5)^T$ as the optimal solution is at worst

$$\frac{284 - 280}{280} = 1.43\%$$

(Starting from Tableau 1, one finds after six iterations of the Gomory algorithm that $(2, 7, 5)^T$ is in fact the optimal solution.)

7.5 Develop the Gomory cut algorithm.

Consider the optimal tableau that results from applying the simplex method to an integer program with the integer requirements ignored, and assume that one of the basic variables, x_b, is nonintegral. The constraint equation corresponding to the tableau row that determined x_b must have the form

$$x_b + \sum y_j x_j = y_0 \tag{1}$$

where the sum is over all nonbasic variables. The y-terms are the coefficients and the constant term appearing in the tableau row determining x_b. Since x_b is obtained from (*1*) by setting the nonbasic variables equal to zero, it follows that y_0 is also nonintegral.

Write each y-term in (*1*) as the sum of an integer and a nonnegative fraction less than 1:

$$y_j = i_j + f_j \qquad \text{and} \qquad y_0 = i_0 + f_0$$

Some of the f_j may be zero, but f_0 is guaranteed to be positive. Equation (*1*) becomes

$$x_b + \sum (i_j + f_j)x_j = i_0 + f_0$$

or

$$x_b + \sum i_j x_j - i_0 = f_0 - \sum f_j x_j \tag{2}$$

If each x-variable is required to be integral, then the left-hand side of (*2*) is integral, which forces the right-hand side also to be integral. But, since each f_j and x_j is nonnegative, so too is $\sum f_j x_j$. The right-hand side of (*2*) then is an integer which is smaller than a positive fraction less than 1; that is, a nonpositive integer.

$$f_0 - \sum f_j x_j \le 0 \qquad \text{or} \qquad \sum f_j x_j - f_0 \ge 0$$

This is the new constraint in the Gomory algorithm.

7.6 Develop another cut algorithm.

Consider (*1*) of Problem 7.5. If each nonbasic variable x_j is zero, then $x_b = y_0$ is nonintegral. If x_b is to become integer-valued, then at least one of the nonbasic x_j must be made different from zero. Since all

variables are required to be nonnegative and integral, it follows that at least one nonbasic variable must be made greater than or equal to 1. This in turn implies that the sum of all the nonbasic variables must be made greater than or equal to 1. If this condition is used as the new constraint to be adjoined to the original integer program, we have the cut algorithm first suggested by Danzig.

7.7 Use the cut algorithm developed in Problem 7.6 to solve

$$\begin{aligned} \text{maximize:} \quad & z = 3x_1 + 4x_2 \\ \text{subject to:} \quad & 2x_1 + x_2 \le 6 \\ & 2x_1 + 3x_2 \le 9 \\ \text{with:} \quad & x_1 \text{ and } x_2 \text{ nonnegative and integral} \end{aligned}$$

Introducing slack variables x_3 and x_4 and then solving the resulting program, with the integer requirements ignored, by the simplex method, we obtain Tableau 1.

	x_1	x_2	x_3	x_4	
x_1	1	0	0.75	−0.25	2.25
x_2	0	1	−0.5	0.5	1.5
	0	0	0.25	1.25	12.75

Tableau 1

The first approximation is, therefore, $x_1^* = 2.25$, $x_2^* = 1.5$, which is not integral. The nonbasic variables are x_3 and x_4, so the new constraint is $x_3 + x_4 \ge 1$. Appending this constraint to Tableau 1, after the introduction of surplus variable x_5 and artificial variable x_6, and solving the resulting program by the two-phase method, we generate Tableau 2.

	x_1	x_2	x_3	x_4	x_5	
x_1	1	0	0	−1	0.75	1.5
x_2	0	1	0	1	−0.5	2
x_3	0	0	1	1	−1	1
	0	0	0	1	0.25	12.25

Tableau 2

It follows from Tableau 2 that $x_1^* = 1.5$, $x_2^* = 2$, $x_3^* = 1$, with x_4 and x_5 nonbasic. Since this solution is nonintegral, we take $x_4 + x_5 \ge 1$ as the new constraint. Adjoining this constraint to Tableau 2, after the introduction of surplus variable x_6 and artificial variable x_7, and solving the resulting program by the two-phase method, we generate Tableau 3.

	x_1	x_2	x_3	x_4	x_5	x_6	
x_1	1	0	0	−1.75	0	0.75	0.75
x_2	0	1	0	1.5	0	−0.5	2.5
x_3	0	0	1	2	0	−1	2
x_5	0	0	0	1	1	−1	1
	0	0	0	0.75	0	0.25	12.25

Tableau 3

From Tableau 3, the current optimal solution is nonintegral, with nonbasic variables x_4 and x_6. The new constraint is thus $x_4 + x_6 \geq 1$. Adjoining it to Tableau 3 and solving the resulting program by the two-phase method, we obtain $x_1^* = 0$, $x_2^* = 3$, with $z^* = 12$. Since this solution is integral, it is the optimal solution to the original integer program.

Supplementary Problems

7.8 Use the Gomory algorithm to

$$\begin{aligned} \text{maximize:} \quad & z = x_1 + 9x_2 + x_3 \\ \text{subject to:} \quad & x_1 + 2x_2 + 3x_3 \leq 9 \\ & 3x_1 + 2x_2 + 2x_3 \leq 15 \\ \text{with:} \quad & \text{all variables nonnegative and integral} \end{aligned}$$

7.9 Solve Problem 1.3 by the Gomory algorithm.

7.10 Solve Problem 6.9 by the Gomory algorithm.

7.11 Solve Problem 6.10 by the Gomory algorithm.

7.12 Solve Problem 6.11 by the Gomory algorithm.

7.13 Solve Problem 6.9 by the cut algorithm of Problem 7.6.

Chapter 8

Integer Programming: The Transportation Algorithm

STANDARD FORM

A *transportation problem* involves m *sources*, each of which has available a_i $(i = 1, 2, \ldots, m)$ units of a homogeneous product, and n *destinations*, each of which requires b_j $(j = 1, 2, \ldots, n)$ units of this product. The numbers a_i and b_j are positive integers. The cost c_{ij} of transporting one unit of product from the ith source to the jth destination is given for each i and j. The objective is to develop an integral transportation schedule (the product may not be fractionalized) that meets all demands from current inventory at a minimum total shipping cost.

It is assumed that total supply and total demand are equal; that is,

$$\sum_{i=1}^{m} a_i = \sum_{j=1}^{n} b_j \tag{8.1}$$

Equation (*8.1*) is guaranteed by creating either a fictitious destination with a demand equal to the surplus if total demand is less than total supply, or a fictitious source with a supply equal to the shortage if total demand exceeds total supply (see Problem 8.1).

Let x_{ij} represent the (unknown) number of units to be shipped from source i to destination j. Then the standard mathematical model for this problem is:

$$\begin{aligned} \text{minimize: } & z = \sum_{i=1}^{m} \sum_{j=1}^{n} c_{ij} x_{ij} \\ \text{subject to: } & \sum_{j=1}^{n} x_{ij} = a_i \quad (i = 1, \ldots, m) \\ & \sum_{i=1}^{m} x_{ij} = b_j \quad (j = 1, \ldots, n) \\ \text{with: } & \text{all } x_{ij} \text{ nonnegative and integral} \end{aligned} \tag{8.2}$$

THE TRANSPORTATION ALGORITHM

The first approximation to system (*8.2*) is always integral (see Problem 7.3), and therefore is always the optimal solution. Rather than determining this first approximation by a direct application of the simplex method, we find it more efficient to work with Tableau 8-1. All entries are self-explanatory, with the exception of the terms u_i and v_j, which will be explained shortly. The *transportation algorithm* is the simplex method specialized to the format of Tableau 8-1; as usual, it involves

(i) finding an initial, basic feasible solution;

(ii) testing the solution for optimality;

(iii) improving the solution when it is not optimal; and

(iv) repeating steps (ii) and (iii) until the optimal solution is obtained.

Copyrighted

Destinations

Sources	1	2	3	...	n	Supply	u_i
1	c_{11} x_{11}	c_{12} x_{12}	c_{13} x_{13}	...	c_{1n} x_{1n}	a_1	u_1
2	c_{21} x_{21}	c_{22} x_{22}	c_{23} x_{23}	...	c_{2n} x_{2n}	a_2	u_2
.....	.....	.....	.....	...	.....	.....	....
m	c_{m1} x_{m1}	c_{m2} x_{m2}	c_{m3} x_{m3}	...	c_{mn} x_{mn}	a_m	u_m
Demand	b_1	b_2	b_3	...	b_n		
v_j	v_1	v_2	v_3	...	v_n		

Tableau 8-1

AN INITIAL BASIC SOLUTION

Northwest corner rule. Beginning with the (1, 1) cell in Tableau 8-1 (the northwest corner), allocate to x_{11} as many units as possible without violating the constraints. This will be the smaller of a_1 and b_1. Thereafter, continue by moving one cell to the right, if some supply remains, or, if not, one cell down. At each step, allocate as much as possible to the cell (variable) under consideration without violating the constraints: the sum of the ith-row allocations cannot exceed a_i, the sum of the jth-column allocations cannot exceed b_j, and no allocation can be negative. The allocation may be zero. See Problem 8.3.

Vogel's method. For each row and each column having some supply or some demand remaining, calculate its *difference*, which is the nonnegative difference between the two smallest shipping costs c_{ij} associated with unassigned variables in that row or column. Consider the row or column having the largest difference; in case of a tie, arbitrarily choose one. In this row or column, locate that unassigned variable (cell) having the smallest unit shipping cost and allocate to it as many units as possible without violating the constraints. Recalculate the new differences and repeat the above procedure until all demands are satisfied. See Problems 8.5 and 8.6.

Variables that are assigned values by either one of these starting procedures become the basic variables in the initial solution. The unassigned variables are nonbasic and, therefore, zero. We adopt the convention of not entering the nonbasic variables in Tableau 8-1—they are understood to be zero—and of indicating basic-variable allocations in boldface type.

The northwest corner rule is the simpler of the two rules to apply. However, Vogel's method, which takes into account the unit shipping costs, usually results in a closer-to-optimal starting solution (see Problem 8.5).

TEST FOR OPTIMALITY

Assign one (any one) of the u_i or v_j in Tableau 8-1 the value zero and calculate the remaining u_i and v_j so that for each *basic variable* $u_i + v_j = c_{ij}$. Then, for each *nonbasic variable*, calculate the quantity

$c_{ij} - u_i - v_j$. If all these latter quantities are nonnegative, the current solution is optimal; otherwise, the current solution is not optimal. See Problems 8.4 and 8.8.

IMPROVING THE SOLUTION

Definition: A *loop* is a sequence of cells in Tableau 8-1 such that: (i) each pair of consecutive cells lie in either the same row or the same column; (ii) no three consecutive cells lie in the same row or column; (iii) the first and last cells of the sequence lie in the same row or column; (iv) no cell appears more than once in the sequence.

Example 8.1 The sequences {(1, 2), (1, 4), (2, 4), (2, 6), (4, 6), (4, 2)} and {(1, 3), (1, 6), (3, 6), (3, 1), (2, 1), (2,2), (4, 2), (4, 4), (2, 4), (2, 3)} illustrated in Figs. 8-1 and 8-2, respectively, are loops. Note that a row or column can have more than two cells in the loop (as the second row of Fig. 8-2), but no more than two can be consecutive.

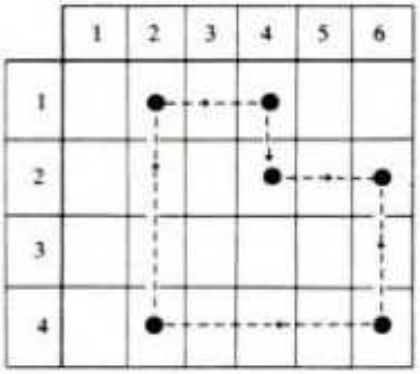

Fig. 8-1

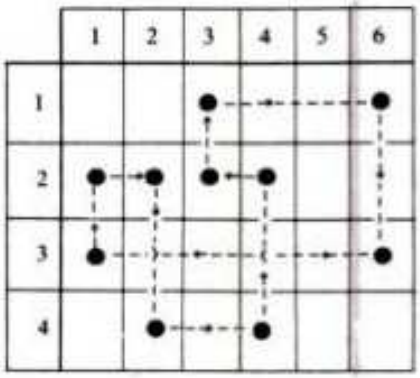

Fig. 8-2

Consider the nonbasic variable corresponding to the most negative of the quantities $c_{ij} - u_i - v_j$ calculated in the test for optimality; it is made the incoming variable. Construct a loop consisting exclusively of this incoming variable (cell) and current basic variables (cells). Then allocate to the incoming cell as many units as possible such that, after appropriate adjustments have been made to the other cells in the loop, the supply and demand constraints are not violated, all allocations remain nonnegative, and one of the old basic variables has been reduced to zero (whereupon it ceases to be basic). See Problem 8.4.

DEGENERACY

In view of condition (*8.1*), only $n + m - 1$ of the constraint equations in system (*8.2*) are independent. Then, by Problems 2.19 and 2.20 a *nondegenerate* basic feasible solution will be characterized by positive values for exactly $n + m - 1$ basic variables. If the process of improving the current basic solution results in two or more current basic variables being reduced to zero simultaneously, only one is allowed to become nonbasic (solver's choice, although the variable with the largest unit shipping cost is preferred). The other variable(s) remains (remain) basic, but with a zero allocation, thereby rendering the new basic solution degenerate.

The northwest corner rule always generates an initial basic solution (Problem 8.2); but it may fail to provide $n + m - 1$ *positive* values (Problem 8.3), thus yielding a degenerate solution. If Vogel's method is used, and does not yield that same number of positive values, additional variables with zero allocations must be designated as basic (see Problem 8.6). The choice is arbitrary, to a point: *basic variables cannot form loops*, and preference is usually given to variables with the lowest associated shipping costs.

Copyrighted m

Improving a degenerate solution may result in replacing one basic variable having a zero value by another such. (This occurs at the first improvement in Problem 8.4.) Although the two degenerate solutions are effectively the same—only the designation of the basic variables has changed, not their values—the additional iteration is necessary for the transportation algorithm to proceed.

Solved Problems

8.1 A car rental company is faced with an allocation problem resulting from rental agreements that allow cars to be returned to locations other than those at which they were originally rented. At the present time, there are two locations (sources) with 15 and 13 surplus cars, respectively, and four locations (destinations) requiring 9, 6, 7, and 9 cars, respectively. Unit transportation costs (in dollars) between the locations are as follows:

	Dest. 1	Dest. 2	Dest. 3	Dest. 4
Source 1	45	17	21	30
Source 2	14	18	19	31

Set up the initial transportation tableau (Tableau 8-1) for the minimum-cost schedule.

Since the total demand ($9 + 6 + 7 + 9 = 31$) exceeds the total supply ($15 + 13 = 28$), a dummy source is created having a supply equal to the 3-unit shortage. In reality, shipments from this fictitious source are never made, so the associated shipping costs are taken as zero. Positive allocations from this source to a destination represent cars that cannot be delivered due to a shortage of supply; they are shortages a destination will experience under an optimal shipping schedule.

For this problem, Tableau 8-1 becomes Tableau 1A. The x_{ij}, u_i, and v_j are not entered, since they are unknown at the moment.

Destinations

Sources	1	2	3	4	Supply	u_i
1	45	17	21	30	15	
2	14	18	19	31	13	
(dummy) 3	0	0	0	0	3	
Demand	9	6	7	9		
v_j						

Tableau 1A

8.2 For an $m \times n$ transportation tableau, show that the northwest corner rule evaluates $n + m - 1$ of the variables.

Observe that after treating the (1, 1) cell, the rule is applied *in the same form* to a subtableau, the new northwest corner being either the original (1, 2) cell or the original (2, 1) cell. Suppose then (mathematical induction) that the result holds for the subtableau, which is either $m \times (n-1)$ or $(m-1) \times n$. In either case, $n + m - 2$ variables are evaluated in the subtableau, so that

$$(n + m - 2) + 1 = n + m - 1$$

variables are evaluated in the tableau. Since the result obviously holds when $n = m = 1$, the proof by induction is complete.

8.3 Use the northwest corner rule to obtain an initial allocation to Tableau 1A.

We begin with x_{11} and assign it the minimum of $a_1 = 15$ and $b_1 = 9$. Thus, $x_{11} = 9$, leaving six surplus cars at the first source. We next move one cell to the right and assign $x_{12} = 6$. These two allocations together exhaust the supply at the first source, so we move one cell down and consider x_{22}. Observe, however, that the demand at the second destination has been satisfied by the x_{12} allocation. Since we cannot deliver additional cars to it without exceeding its demand, we must assign $x_{22} = 0$ and the move one cell to the right. Continuing in this manner, we obtain the degenerate solution (fewer than $4 + 3 - 1 = 6$ *positive* entries) depicted in Tableau 1B.

	1	2	3	4	Supply	u_i
1	45 **9**	17 **6**	21	30	15	
2	14	18 **0**	19 **7**	31 **6**	13	
(dummy) 3	0	0	0	0 **3**	3	
Demand	9	6	7	9		
v_j						

Tableau 1B

8.4 Solve the transportation problem described in Problem 8.1.

To determine whether the initial allocation found in Tableau 1B is optimal, we first calculate the terms u_i and v_j with respect to the basic-variable cells of the tableau. Arbitrarily choosing $u_2 = 0$ (since the second row contains more basic variables than any other row or column, this choice will simplify the computations), we find:

(2, 2) cell: $u_2 + v_2 = c_{22}$, $0 + v_2 = 18$, or $v_2 = 18$
(2, 3) cell: $u_2 + v_3 = c_{23}$, $0 + v_3 = 19$, or $v_3 = 19$
(2, 4) cell: $u_2 + v_4 = c_{24}$, $0 + v_4 = 31$, or $v_4 = 31$
(1, 2) cell: $u_1 + v_2 = c_{12}$, $u_1 + 18 = 17$, or $u_1 = -1$
(1, 1) cell: $u_1 + v_1 = c_{11}$, $-1 + v_1 = 45$, or $v_1 = 46$
(3, 4) cell: $u_3 + v_4 = c_{34}$, $u_3 + 31 = 0$, or $u_3 = -31$

These values are shown in Tableau 1C. Next we calculate the quantities $c_{ij} - u_i - v_j$ for each nonbasic-variable cell of Tableau 1B.

$$
\begin{aligned}
&(1, 3) \text{ cell:} && c_{13} - u_1 - v_3 = 21 - (-1) - 19 = 3 \\
&(1, 4) \text{ cell:} && c_{14} - u_1 - v_4 = 30 - (-1) - 31 = 0 \\
&(2, 1) \text{ cell:} && c_{21} - u_2 - v_1 = 14 - 0 - 46 = -32 \\
&(3, 1) \text{ cell:} && c_{31} - u_3 - v_1 = 0 - (-31) - 46 = -15 \\
&(3, 2) \text{ cell:} && c_{32} - u_3 - v_2 = 0 - (-31) - 18 = 13 \\
&(3, 3) \text{ cell:} && c_{33} - u_3 - v_3 = 0 - (-31) - 19 = 12
\end{aligned}
$$

These results also are recorded in Tableau 1C, in parentheses.

	1	2	3	4	Supply	u_i
1	45 **9**	17 **6**	21 (3)	30 (0)	15	−1
2	14 (−32) +	18 **0**	19 **7**	31 **6**	13	0
(dummy) 3	0 (−15)	0 (13)	0 (12)	0 **3**	3	−31
Demand	9	6	7	9		
v_j	46	18	19	31		

Tableau 1C

Since at least one of these $(c_{ij} - u_i - v_j)$-values is negative, the current solution is not optimal, and a better solution can be obtained by increasing the allocation to the variable (cell) having the largest negative entry, here the (2, 1) cell of Tableau 1C. We do so by placing a boldface plus sign (signaling an increase) in the (2, 1) cell and identifying a loop containing, besides this cell, only basic-variable cells. Such a loop is shown by the heavy lines in Tableau 1C. We now increase the allocation to the (2, 1) cell as much as possible, simultaneously adjusting the other cell allocations in the loop so as not to violate the supply, demand, or nonnegativity constraints. Any positive allocation to the (2, 1) cell would force x_{22} to become negative. To avoid this, but still make x_{21} basic, we assign $x_{21} = 0$ and remove x_{22} from our set of basic variables. The new basic solution, also degenerate, is given in Tableau 1D.

We now check whether this solution is optimal. Working directly on Tableau 1D, we first calculate the new u_i and v_j with respect to the new basic variables, and then compute $c_{ij} - u_i - v_j$ for each nonbasic-variable cell. Again we arbitrarily choose $u_2 = 0$, since the second row contains more basic variables than any other row or column. These results are shown in parentheses in Tableau 1E. Since two entries are negative, the current solution is not optimal, and a better solution can be obtained by increasing the allocation to the (1, 4) cell. The loop whereby this is accomplished is indicated by heavy lines in Tableau 1E; it consists of the cells (1, 4), (2, 4), (2, 1), and (1, 1). Any amount added to cell (1, 4) must be simultaneously subtracted from cells (1, 1) and (2, 4) and then added to cell (2, 1), so as not to violate the supply–demand constraints. Therefore, no more than six cars can be added to cell (1, 4) without forcing x_{24} negative. Consequently, we reassign $x_{14} = 4$, make the appropriate adjustments in the loop, and remove x_{24} as a basic variable. The new, nondegenerate basic solution is shown in Tableau 1F.

	1	2	3	4	Supply	u_i
1	45 **9**	17 **6**	21	30	15	
2	14 **0**	18	19 **7**	31 **6**	13	
(dummy) 3	0	0	0	0 **3**	3	
Demand	9	6	7	9		
v_j						

Tableau 1D

	1	2	3	4	Supply	u_i
1	45 **9**	17 **6**	21 (−29)	30 (−32) +	15	31
2	14 **0**	18 (32)	19 **7**	31 **6**	13	0
(dummy) 3	0 (17)	0 (45)	0 (12)	0 **3**	3	−31
Demand	9	6	7	9		
v_j	14	−14	19	31		

Tableau 1E

After one further optimality test (negative) and consequent change of basis, we obtain Tableau 1H, which also shows the results of the optimality test of the new basic solution. It is seen that each $c_{ij} - u_i - v_j$ is nonnegative; hence the new solution is optimal. That is, $x^*_{12} = 6$, $x^*_{13} = 3$, $x^*_{14} = 6$, $x^*_{21} = 9$, $x^*_{23} = 4$, $x^*_{34} = 3$, with all other variables nonbasic and, therefore, zero. Furthermore,

$$z^* = 6(17) + 3(21) + 6(30) + 9(14) + 4(19) + 3(0) = \$547$$

The fact that some positive allocation comes from the dummy source indicates that not all demands can be met under this optimal schedule. In particular, destination 4 will receive three fewer cars than it needs.

	1	2	3	4	Supply	u_i
1	45 **3**	17 **6**	21	30 **6**	15	
2	14 **6**	18	19 **7**	31	13	
(dummy) 3	0	0	0	0 **3**	3	
Demand	9	6	7	9		
v_j						

Tableau 1F

	1	2	3	4	Supply	u_i
1	45 (29)	17 **6**	21 **3**	30 **6**	15	0
2	14 **9**	18 (3)	19 **4**	31 (3)	13	−2
(dummy) 3	0 (14)	0 (13)	0 (9)	0 **3**	3	−30
Demand	9	6	7	9		
v_j	16	17	21	30		

Tableau 1H

8.5 Use Vogel's method to determine an initial basic solution to the transportation problem described in Problem 8.1.

The two smallest costs in row 1 of Tableau 1A are 17 and 21; their difference is 4. The twosmallest costs in row 2 are 14 and 18; their difference is also 4. The two smallest costs in row 3are both 0; so their difference is 0. Repeating this analysis on the columns, we generate the differences shown beside Tableau 5A. Since the largest of these differences, indicated by a †, occurs in column 4, we locate the variable (cell) in this column having the lowest unit shipping cost and allocate to it as many units as possible. Thus $x_{34} = 3$, exhausting the supply of source 3 and *eliminating row 3 from further consideration.*

We now compute the differences for each row and column anew, without reference to the elements in row 3. The results are shown beside Tableau 5B, where the entry X for the second difference in row 3 means

	1	2	3	4	Supply	u_i	DIFFERENCES
1	45	17	21	30	15		4
2	14	18	19	31	13		4
(dummy) 3	0	0	0	0 **3**	3		0
Demand	9	6	7	9			
v_j							
DIFFERENCES	14	17	19	30†			

Tableau 5A

	1	2	3	4	Supply	u_i	DIFFERENCES	
1	45	17	21	30	15		4	4
2	14 **9**	18	19	31	13		4	4
(dummy) 3	0	0	0	0 **3**	3		0	X
Demand	9	6	7	9				
v_j								
DIFFERENCES	14 31†	17 1	19 2	30† 1				

Tableau 5B

simply that this row has been eliminated. The largest difference appears in column 1, and the variable in this column having the smallest cost is x_{21} (since row 3 is no longer under consideration). We assign $x_{21} = 9$, thereby satisfying the demand of destination 1. Accordingly, column 1 will not be involved in the ensuing calculations.

With row 3 and column 1 eliminated, the new differences are shown beside Tableau 5C, where, again, an X indicates that a computation was not required. The largest difference occurs in row 1, and the variable in this row having the lowest unit cost is x_{12}. Note that even if c_{11} had been less than 17, x_{11} would not have been selected here, since it falls in a column that has been eliminated. We set $x_{12} = 6$, thereby meeting the demand of destination 2 and removing column 2 from further calculations.

With row 3 and columns 1 and 2 no longer considered, the new differences are shown beside Tableau 5D. The largest difference occurs in row 2, and the smallest cost in that row and in columns still under

	1	2	3	4	Supply	u_i	DIFFERENCES		
1	45	17 **6**	21	30	15		4	4	4†
2	14 **9**	18	19	31	13		4	4	1
(dummy) 3	0	0	0	0 **3**	3		0	X	X
Demand	9	6	7	9					
v_j									
DIFFERENCES	14 31† X	17 1 1	19 2 2	30† 1 1					

Tableau 5C

	1	2	3	4	Supply	u_i	DIFFERENCES			
1	45	17 **6**	21	30	15		4	4	4†	9
2	14 **9**	18	19 **4**	31	13		4	4	1	12†
(dummy) 3	0	0	0	0 **3**	3		0	X	X	X
Demand	9	6	7	9						
v_j										
DIFFERENCES	14 31† X X	17 1 1 X	19 2 2 2	30† 1 1 1						

Tableau 5D

consideration is 19. Consequently, we assign $x_{23} = 4$, which with the earlier assignment $x_{21} = 9$ exhausts the supply of source 2 and removes row 2 from further consideration.

With rows 2 and 3 eliminated, we no longer can calculate differences for the remaining columns. This is a signal that the remaining allocations are uniquely determined. Here we must set $x_{13} = 3$ and $x_{14} = 6$ if we are to meet all demands without exceeding supplies. The result is the allocation shown in Tableau 1H, which was determined in Problem 8.4 to be optimal.

8.6 Use the transportation algorithm to solve Problem 1.12.

Since total supply equals total demand, no fictitious source or destination need be created, and the transportation tableau becomes Tableau 6A. Applying Vogel's method and using the same notation as adopted in Problem 8.5, we arrive at Tableau 6B after the second set of differences have been calculated. There is a two-way tie for the largest difference. A good procedure is to scan each candidate, here row 1 (with column 3 eliminated) and column 1, for that variable with the lowest unit cost. Again there is a tie, so we arbitrarily select x_{12}. Setting $x_{12} = 700$ satisfies the entire demand of destination 2 and, along with the previous allocation to x_{13}, exhausts the supply of source 1. With columns 2 and 3 and row 1 eliminated, the remaining allocation, $x_{21} = 1000$, is uniquely determined, and Vogel's method thus leads to Tableau 6C. This solution, however, is not complete, as only three of the necessary $3 + 2 - 1 = 4$ basic variables have been identified. We arbitrarily select $x_{23} = 0$ as the fourth basic variable, since it is the unassigned variable with the lowest unit cost and since its inclusion as a basic variable does not generate a loop with the previously defined basic variables. The result is the basic solution, necessarily degenerate, given in Table 6D.

We now test this solution for optimality, working directly on Tableau 6D; it is not optimal. Improving it, we obtain the allocation shown in Tableau 6E, which is optimal. Thus, $x_{12}^* = 700$, $x_{13}^* = 500$, $x_{21}^* = 1000$, $x_{11}^* = x_{22}^* = x_{23}^* = 0$, with

$$z^* = 700(13) + 500(11) + 1000(13) = 27\,600¢ = \$276$$

Note that this optimal allocation is identical to the initial allocation; only the designation of the basic variables has changed.

	1	2	3	Supply	u_i
1	14	13	11	1200	
2	13	13	12	1000	
Demand	1000	700	500		
v_j					

Tableau 6A

	1	2	3	Supply	u_i	DIFFERENCES	
1	14	13	11 **500**	1200		2†	1
2	13	13	12	1000		1	0
Demand	1000	700	500				
v_j							
DIFFERENCES	1 1	0 0	1 X				

Tableau 6B

	1	2	3	Supply	u_i	DIFFERENCES	
1	14	13 **700**	11 **500**	1200		2†	1†
2	13 **1000**	13	12	1000		1	0
Demand	1000	700	500				
v_j							
DIFFERENCES	1 1	0 0	1 X				

Tableau 6C

	1	2	3	Supply	u_i
1	14 (2)	13 **700**	11 **500**	1200	0
2	13 **1000**	13 (−1) +	12 **0**	1000	1
Demand	1000	700	500		
v_j	12	13	11		

Tableau 6D

	1	2	3	Supply	u_i
1	14 (1)	13 **700**	11 **500**	1200	0
2	13 **1000**	13 **0**	12 (1)	1000	0
Demand	1000	700	500		
v_j	13	13	11		

Tableau 6E

8.7 Find the unsymmetric dual to system (*8.2*) with the integer requirements ignored.

The primal constraints may be written as the $(m+n) \times mn$ system

$$\begin{array}{lllll}
x_{11} + \cdots + x_{1n} & & & & = a_1 \\
 & x_{21} + \cdots + x_{2n} & & & = a_2 \\
\cdots & \cdots & \cdots & \cdots & \cdots \\
 & & & x_{m1} + \cdots + x_{mn} & = a_m \\
x_{11} & + x_{21} & & + x_{m1} & = b_1 \\
x_{12} & & + x_{22} & + x_{m2} & = b_2 \\
\cdots & \cdots & \cdots & \cdots & \cdots \\
x_{1n} & & + x_{2n} & + x_{mn} & = b_n
\end{array} \qquad (1)$$

It is seen that each column of the coefficient matrix $\mathbf{A}$ contains exactly two 1's; specifically, column $(i-1)n+j$ has a 1 in row i and a 1 in row $m+j$. Then, the $[(i-1)n+j]$th dual constraint, as given in (*5.4*), involves only the ith and $(m+j)$th dual variables. Denoting the dual variables by $u_1, u_2, \ldots, u_m, v_1, v_2, \ldots, v_n$, this constraint is simply

$$u_i + v_j \le c_{(i-1)n+j} \quad (=c_{ij})$$

and the complete dual program is expressible as

$$\begin{aligned} &\text{maximize:} \quad z = \sum_{i=1}^{m} a_i u_i + \sum_{j=1}^{n} b_j v_j \\ &\text{subject to:} \quad u_i + v_j \le c_{ij} \quad (i = 1, 2, \ldots, m;\ j = 1, 2, \ldots, n) \end{aligned} \qquad (2)$$

Program (*2*) has matrix form (*4.4*) with

$$\mathbf{B} \equiv [a_1, \ldots, a_m, b_1, \ldots, b_n]^T \qquad \mathbf{C} \equiv [c_{11}, c_{12}, \ldots, c_{1n}, c_{21}, \ldots, c_{2n}, \ldots, c_{m1}, \ldots, c_{mn}]$$

and $\mathbf{W} = [\mathbf{U}^T, \mathbf{V}^T]^T$.

8.8 Use the result of Problem 8.7 to validate the optimality test in the transportation algorithm.

Let $\mathbf{X} = [x_{11}, x_{12}, \ldots, x_{1n}, \ldots, x_{m1}, \ldots, x_{mn}]^T$ be any feasible solution to the primal program, (*8.2*), and $\mathbf{W}$ be any feasible solution to the dual program, (*2*) of Problem 8.7 in matrix form. It follows from Problem 4.9 that

$$C^T\mathbf{X} \ge \mathbf{B}^T\mathbf{W} \qquad \text{or} \qquad \sum_{i=1}^{m}\sum_{j=1}^{n} c_{ij}x_{ij} \ge \sum_{i=1}^{m} a_i u_i + \sum_{j=1}^{n} b_j v_j \qquad (1)$$

and it is easy to show (compare Problem 4.41) that if (*1*) holds with equality, $\mathbf{X}$ and $\mathbf{W}$ are optimal solutions to their respective programs.

Now, suppose that the transportation algorithm has produced a tableau for which numbers u_i^* and v_j^* can be computed which have the following properties: (*a*) for each cell (i,j) containing a basic variable x_{ij}^* (whether positive or zero), $u_i^* + v_j^* = c_{ij}$; (*b*) for each cell (i,j) containing a nonbasic variable, $x_{ij}^* = 0$, $u_i^* + v_j^* \le c_{ij}$. Then $\mathbf{X}^*$ is a feasible solution to the primal program and $\mathbf{W}^*$ is a feasible solution to the dual program. Moreover, using the primary constraint equations, we have

$$\sum_{i=1}^{m} a_i u_i^* = \sum_{i=1}^{m}\left(\sum_{j=1}^{n} x_{ij}^*\right)u_i^* = \sum_{i=1}^{m}\sum_{j=1}^{n} u_i^* x_{ij}^* \qquad \text{and} \qquad \sum_{j=1}^{n} b_j v_j^* = \sum_{j=1}^{n}\left(\sum_{i=1}^{m} x_{ij}^*\right)v_j^* = \sum_{i=1}^{m}\sum_{j=1}^{n} v_j^* x_{ij}^*$$

Consequently,

$$\sum_{i=1}^{m} a_i v_i^* + \sum_{j=1}^{n} b_j v_j^* = \sum_{i=1}^{m}\sum_{j=1}^{n} (u_i^* + v_j^*)x_{ij}^* = \sum_{i=1}^{m}\sum_{j=1}^{n} c_{ij}x_{ij}^* \qquad (2)$$

the last equality following from properties (*a*) and (*b*) above. But (*2*) is just (*1*) for $\mathbf{X}^*$ and $\mathbf{W}^*$, holding with equality. Hence, $\mathbf{X}^*$ is optimal for the transportation problem (and $\mathbf{W}^*$ is optimal for the dual problem).

Supplementary Problems

8.9 Set up a transportation tableau for Problem 1.21 and then use the transportation algorithm to determine an optimal production schedule.

8.10 Use the transportation algorithm to solve Problem 1.23.

8.11 A regional airline can buy its jet fuel from any one of three vendors. The airline's needs for the upcoming month at each of the three airports it serves are 100 000 gal at airport 1, 180 000 gal at airport 2, and 350 000 gal at airport 3. Each vendor can supply fuel to each airport at a price (in cents per gallon) given by the following schedule:

	Airport 1	Airport 2	Airport 3
Vendor 1	92	89	90
Vendor 2	91	91	95
Vendor 3	87	90	92

Each vendor, however, is limited in the total number of gallons it can provide during any one month. These capacities are 320 000 gal for vendor 1, 270 000 gal for vendor 2, and 190 000 gal for vendor 3. Determine a purchasing policy that will supply the airline's requirements at each airport at minimum total cost.

8.12 A baking firm can produce a specialty bread in either of its two plants, as follows:

Plant	Production Capacity, loaves	Production Cost, ¢/loaf
A	2500	23
B	2100	25

Four restaurant chains are willing to purchase their bread; their demands and the prices they are willing to pay are as follows:

Chain	Maximum Demand, loaves	Price Offered, ¢/loaf
1	1800	39
2	2300	37
3	550	40
4	1750	36

The cost (in cents) of shipping a loaf from a plant to a restaurant chain is given in the following table:

	Chain 1	Chain 2	Chain 3	Chain 4
Plant A	6	8	11	9
Plant B	12	6	8	5

Determine a delivery schedule for the baking form that will *maximize* its total profit from this bread.

8.13 Two drug companies have inventories of 1.1 and 0.9 million doses of a particular flu vaccine, and an epidemic of the flu seems imminent in three cities. Since the flu could be fatal to senior citizens, it is imperative that they be vaccinated first; others will be vaccinated on a first-come-first-served basis while the vaccine supply lasts. The amounts of vaccine (in millions of doses) each city estimates it could administer are as follows:

	City 1	City 2	City 3
To Elders	0.325	0.260	0.195
To Others	0.750	0.800	0.650

The shipping costs (in cents per dose) between drug companies and cities are as follows:

	City 1	City 2	City 3
Company 1	3	3	6
Company 2	1	4	7

Determine a minimum-cost shipping schedule which will provide each city with at least enough vaccine to care for its senior citizens. (*Hint*: Divide each city into two destinations, senior citizens and others. Create a dummy source. Make the shipping costs from the dummy to the senior-citizen destinations prohibitively high, effectively guaranteeing no shipments along those links.)

8.14 Prove that if the costs in any row or any column of a transportation tableau are uniformly reduced by the same number (positive or negative), then the resultant problem has the same optimal solution as the original problem.

Chapter 9

Integer Programming: Scheduling Models

PRODUCTION PROBLEMS

Production problems involve a single product which is to be manufactured over a number of successive time periods to meet prespecified demands. Once manufactured, units of the product can be either shipped or stored. Both production costs and storage costs are known. The objective is to determine a production schedule which will meet all future demands at minimum total cost (which is total production cost plus total storage cost, as total shipping cost is presumed fixed). (See Problem 9.1.)

Production problems may be converted into transportation problems by considering the time periods during which production can take place as sources, and the time periods in which units will be shipped as destinations. The production capacities are taken to be the supplies. Therefore, x_{ij} denotes the number of units to be produced during time period i for shipment during time period j, and c_{ij} is the unit production cost during time period i plus the cost of storing a unit of product from time period i until time period j. Since units cannot be shipped prior to being produced, c_{ij} is made prohibitively large for $i > j$ to force the corresponding x_{ij} to be zero.

TRANSSHIPMENT PROBLEMS

A *transshipment problem*, like a transportation problem, involves sources, having supplies, and destinations, having demands. In addition, however, it also involves *junctions*, through which goods can be shipped. Such junctions may be distinct from sources and destinations, or a source or destination may also function as a junction. Unit shipping costs are given between all directly accessible locations, and the objective is to develop a transportation schedule that will meet all demands at minimum total cost. (See Problems 9.2 and 9.3.)

Transshipment problems may be converted into transportation problems by making every junction both a source and a destination. As in the transportation algorithm, total supply is presumed equal to total demand; if this is not true initially, a fictitious source or destination is added. Thus, the total number of units in the system is given either by the sum of the supplies or by the sum of the demands. Each junction is assigned a supply equal to its original supply (or zero, if the junction did not originally coincide with a source) plus the total number of units in the system; and it is assigned a demand equal to its original demand (or zero, if the junction did not originally coincide with a destination) plus the total number of units in the system. These assignments allow for the possibility that all units may pass through a given junction. The cost of transporting 1 unit from a junction (considered as a source) to itself (considered as a destination) is zero. Those units that do not pass through a junction under the optimal schedule will appear as allocations from the junction to itself.

ASSIGNMENT PROBLEMS

Assignment problems involve scheduling workers to jobs on a *one-to-one* basis (more generally, they involve *permutations* of a set of objects). The number of workers is presumed equal to the number of jobs—a condition that can be guaranteed by creating either fictitious workers or jobs, as needed—and the time c_{ij} required by the ith worker to complete the jth job (or, the value of the ith object in the jth position) is known. The objective is to schedule every worker to a job so that all jobs are

completed in the minimum total time (or, to find the permutation that has the greatest total value). (See Problem 9.4.)

Assignment problems can be converted into transportation problems by considering the workers as sources and the jobs as destinations, where all supplies and demands are equal to 1. A solution procedure more efficient than the general transportation algorithm is the *Hungarian method*, which uses only the cost matrix, Tableau 9-1, as input. There are four steps:

		Jobs				
		1	2	3	...	n
Workers	1	c_{11}	c_{12}	c_{13}	...	c_{1n}
	2	c_{21}	c_{22}	c_{23}	...	c_{2n}
	3	c_{31}	c_{32}	c_{33}	...	c_{3n}
	...	...	...	...	...	...
	n	c_{n1}	c_{n2}	c_{n3}	...	c_{nn}

Tableau 9-1

STEP 1: In each row of Tableau 9-1, locate the smallest element and subtract it from every element in that row. Repeat this procedure for each column (the column minimum is determined after the row subtractions). The revised cost matrix will have at least one zero in every row and column.

STEP 2: Determine whether there exists a feasible assignment involving only zero costs in the revised cost matrix. In other words, find if the revised matrix has n zero entries no two of which are in the same row or column. If such an assignment exists, it is optimal. If no such exists, go to Step 3.

STEP 3: Cover all zeros in the revised cost matrix with as few horizontal and vertical lines as possible. Each horizontal line must pass through an entire row, each vertical line must pass through an entire column; the total number of lines in this minimal covering will be smaller than n. Locate the smallest number in the cost matrix not covered by a line. Subtract this number from every element not covered by a line and add it to every element covered by two lines.

STEP 4: Return to Step 2.

See Problem 9.5. According to a basic result in graph theory, the number of lines required in Step 3 will be precisely equal to the largest number of zeros in the revised matrix such that no two of them are in the same row or column.

THE TRAVELING SALESPERSON PROBLEM

This problem involves an individual who must leave a base location, visit $n-1$ other locations (each once and only once), and then return to the base. The cost of traveling between each pair of locations, c_{ij}, is given with c_{ij} not necessarily equal to c_{ji}. The objective is to schedule a minimum-cost itinerary. Since what is important is the *circuit* executed by the salesperson, it is purely a matter of convenience which of the n locations is designated the base.

An assignment problem may be associated with each traveling salesperson problem, as follows. Arbitrarily label the locations involved in the traveling salesperson problem with the integers $1, 2, \ldots, n$. Consider a set of n "workers" and a set of n "jobs." The cost of an assignment, c_{ij}, is the cost of traveling directly from location i to location j. It is clear that every feasible solution to the traveling salesperson problem corresponds to a feasible solution to the associated assignment problem. However, the assignment problem will possess feasible solutions (corresponding to noncyclic permutations) which do

not represent a feasible solution of the traveling salesperson problem. The optimal solution of the associated assignment problem serves as a *first approximation* to the solution of the traveling salesperson problem. We apply the Hungarian method to the cost matrix of the assignment problem (which is the same as the matrix of the salesperson problem), and if the result corresponds to a feasible itinerary, that itinerary must be optimal. If not, a variant of the branch-and-bound method (Chapter 6) may be used to create two new assignment problems which between them contain the optimal solution of the traveling salesperson problem.

Branching is on the matrix element c_{pq}, where $p \to q$ is any one of the assignments in the current first approximation (which, by hypothesis, does not reflect a feasible itinerary). One new cost matrix is obtained by replacing c_{pq} by a prohibitively large number; the other new matrix is obtained by replacing c_{qp} (the transposed element), as well as all elements in the pth row or qth column except c_{pq} itself, by a prohibitively large number.

Branch-and-bound procedures are computationally impractical for large problems involving hundreds of locations, so a number of "near-optimal" algorithms have been devised for such situations. (See Problem 9.7.) The objection to near-optimal procedures is that, although they are quite good generally, they can, in particular instances, generate very poor approximations to the optimal solution. (See Problem 9.9.)

Solved Problems

9.1 An industrial firm must plan for each of the four seasons over the next year. The company's production capacities and the expected demands (all in units) are as follows:

	Spring	Summer	Fall	Winter
Demand	250	100	400	500
Regular Capacity	200	300	350	...
Overtime Capacity	100	50	100	150

Regular production costs for the firm are \$7.00 per unit; the unit cost of overtime varies seasonally, being \$8.00 in spring and fall, \$9.00 in summer, and \$10.00 in winter.

The company has 200 units of inventory on January 1, but, as it plans to discontinue the product at the end of the year, it wants no inventory after the winter season. Units produced on regular shifts are not available for shipment during the season of production; generally, they are sold during the following season. Those that are not are added to inventory and carried forward at a cost of \$0.70 per unit per season. In contrast, units produced on overtime shifts must be shipped in the same season as produced. Determine a production schedule that meets all demands at minimum total cost.

Time periods during which production can take place are: the overtime shifts for the four seasons, and the regular shifts for the first three seasons. Each of these seven periods becomes a source, and to them we add an eighth source, initial inventory, since it too can supply goods. The total supply is 1450 units. Time periods in which products will be required are the four seasons; these become the destinations, with a total demand of 1250 units. Since total supply exceeds total demand, a fictitious destination must be created, with a demand equal to the 200-unit excess.

Positive allocations from a source to the fictitious destination represent units that could be produced by the source but will not be, because they are not needed. Since all units in initial inventory already *have been* produced, a positive allocation from initial inventory to the dummy must be avoided. This is done by assigning a prohibitively large number (\$10000) as the associated unit cost. All other costs associated with the dummy are, as usual, taken to be zero.

Other allocations which must be avoided are also assigned prohibitively large costs. These include shipments from regular shifts to the current season or to earlier seasons, and shipments from overtime shifts to any but the current season. Costs associated with the initial inventory are future carrying costs only, since production costs and past carrying charges have already been incurred and cannot be minimized. The remaining cost entries are simply the production costs plus the storage charges.

Applying the transportation algorithm to this problem, we obtain Tableau 1 as the optimal tableau. It follows that the spring demand will be met by using all 200 units from inventory and 50 units from overtime production in the spring. The summer demand is met from the regular spring shift. The fall demand is met by 300 units from the regular summer shift plus 100 units from overtime production in the fall. The winter demand is satisfied by using 100 units made in the spring on a regular shift and stored, plus 350 units from the regular fall production and 50 units produced in the winter on an overtime shift.

	Spring	Summer	Fall	Winter	Dummy	Supply	u_i
Regular (Spring)	10000 (9993.60)	7.00 **100**	7.70 (0)	8.40 **100**	0 (1.60)	200	8.40
Regular (Summer)	10000 (9994.30)	10000 (9993.70)	7.00 **300**	7.70 **0**	0 (2.30)	300	7.70
Regular (Fall)	10000 (9995)	10000 (9994.40)	10000 (9993.70)	7.00 **350**	0 (3)	350	7
Initial Inventory	0 **200**	0.70 (0.10)	1.40 (0.10)	2.10 (0.10)	10000 (10008)	200	2
Overtime (Spring)	8.00 **50**	10000 (9991.40)	10000 (9990.70)	10000 (9990)	0 **50**	100	10
Overtime (Summer)	10000 (9992)	9.00 (0.40)	10000 (9990.70)	10000 (9990)	0 **50**	50	10
Overtime (Fall)	10000 (9993.30)	10000 (9992.70)	8.00 **100**	10000 (9991.30)	0 (1.30)	100	8.70
Overtime (Winter)	10000 (9992)	10000 (9991.40)	10000 (9990.70)	10.00 **50**	0 **100**	150	10
Demand	250	100	400	500	200		
v_j	−2	−1.40	−0.70	0	−10		

Tableau 1

9.2 A corporation must transport 70 units of a product from location 1 to locations 2 and 3, in the amounts of 45 and 25 units, respectively. Air freight charges c_{ij} (in dollars per unit) between locations served by the air carrier are given in Table 9-1, where dotted lines signify that service

Table 9-1

$i \backslash j$	1	2	3	4
1	...	38	56	34
2	38	...	27	...
3	56	27	...	19
4	34	...	19	...

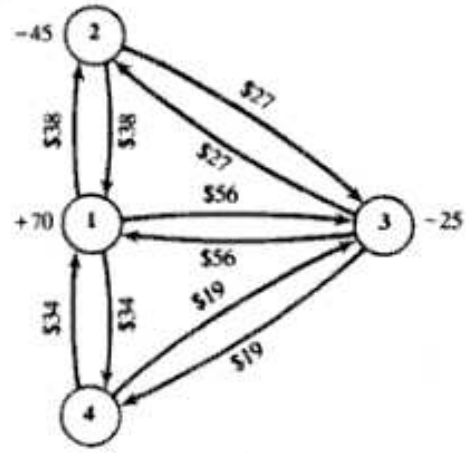

Fig. 9-1

is not available. Determine a shipping schedule that allocates the required number of goods to each destination at a minimum total freight cost. No shipment need be flown directly; shipments through intermediate points are allowed.

This problem is depicted schematically by Fig. 9-1, wherein supplies are indicated by positive, and demands by negative, numbers. Notice that, despite the symmetry of Table 9-1, the freight rates are not proportional to distance. Location 4 is a pure junction. Locations 2 and 3 serve as both destinations and junctions (goods can be shipped from location 1 to location 3 through location 2, and from 1 to 2 through 3), while location 1 serves as both a source and a junction. Since it could never be optimal to ship goods from location 1 and have them return at some later time, only to be shipped out again, the problem can be simplified by not allowing shipments *to* location 1, thereby restricting it to being solely a source.

For application of the transportation algorithm, we increase the supply and demand of every junction—locations 2, 3, and 4—by the total number of units in the system, 70 units. Also, we define $c_{24} = c_{42} = \$10\,000$, to force zero shipments over the nonexistent routes $2 \to 4$ and $4 \to 2$, and define $c_{22} = c_{33} = c_{44} = 0$. The transportation algorithm produces the optimal Tableau 2. Thus, 45 units will be shipped from location 1 directly to location 2, satisfying its demand, while the remaining 25 units will be

Destinations

Sources	2	3	4	Supply	u_i
1	38 **45**	56 (3)	34 **25**	70	0
2	0 **70**	27 (12)	10 000 (10 004)	70	−38
3	27 (42)	0 **70**	19 (38)	70	−53
4	10 000 (9996)	19 **25**	0 **45**	70	−34
Demand	115	95	70		
v_j	38	53	34		

Tableau 2

shipped from location 1 to location 4, whereupon they will be forwarded to location 3. Note that $x_{32}^* = x_{33}^* = 70$, indicating that (all) 70 units avoid passing *through* these locations. Similarly, $x_{24}^* = 45$, signifying that 45 of the 70 units are not shipped through location 4.

9.3 For the data of Fig. 9-2, determine a shipping schedule that meets all demands at a minimum total cost.

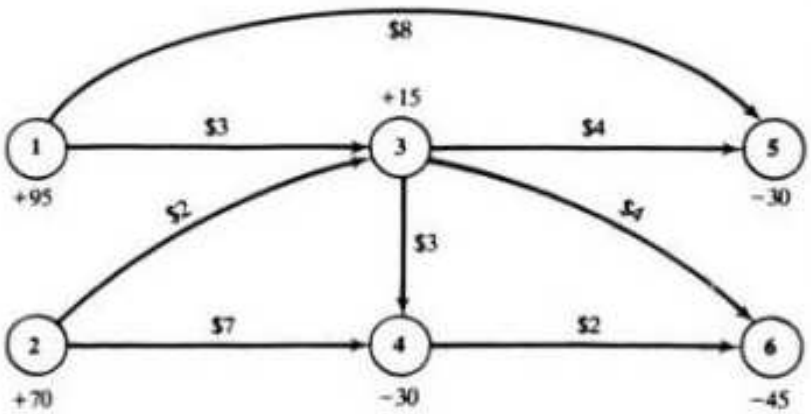

Fig. 9-2

Locations 1 and 2 are sources, while locations 5 and 6 are destinations. Location 3 is both a source and a junction, whereas location 4 serves both as a destination and a junction. Because total supply is 180 units but total demand is only 105 units, location 7 is created as a dummy destination with a demand of $180 - 105 = 75$ units. Since every junction is made both a source and a destination, by adding 180 units to both its supply and its demand, the transportation tableau will involve sources 1, 2, 3, 4, and destinations 3, 4, 5, 6, 7. Besides the costs given in Fig. 9-2, we have zero as the cost from a junction (as a source) to itself (as a destination), zero as the cost from any source to the dummy, and an excessive amount ($10 000) as the cost over any nonexistent link (e.g., $1 \to 6$).

Tableau 3 is the optimal transportation tableau. Location 3 receives 20 units from location 1 and 70 units from location 2, whereupon it redistributes these units along with its own initial supply of 15 units to locations 4, 5, and 6. After all demands have been satisfied, location 1 will remain with 75 units, indicated

Destinations

	3	4	5	6	(dummy) 7	Supply	u_i
1	3 **20**	10 000 (9994)	8 (1)	10 000 (9993)	0 **75**	95	3
2	2 **70**	7 (2)	10 000 (9994)	10 000 (9994)	0 (1)	70	2
3	0 **90**	3 **30**	4 **30**	4 **45**	0 (3)	195	0
4	10 000 (10 003)	0 **180**	10 000 (9999)	2 (1)	0 (6)	180	−3
Demand	180	210	30	45	75		
v_j	0	3	4	4	−3		

Tableau 3

in Tableau 3 by the allocation from location 1 to the dummy. The allocations $x^*_{33} = 90$ and $x^*_{44} = 180$ are book entries signifying the numbers of units that do not pass through junctions 3 and 4, respectively.

9.4 Solve Problem 1.13 by the Hungarian method.

Table 1-1 of Problem 1.13 is expanded to make the number of events equal to the number of swimmers; the result is Tableau 4A. As usual, costs (times) associated with the dummies, events 5 and 6, are taken to be zero. The rationale here is that events 5 and 6 do not exist, so they can be completed in zero time; swimmers assigned to these events will be the ones not entered in the four-swimmer relay.

The Hungarian method is initiated by subtracting 0 from every row of Tableau 4A and then subtracting 65, 69, 63, 55, 0, and 0 from columns 1 through 6, respectively; this generates Tableau 4B. Since this matrix does not contain a zero-cost feasible solution, we cover the existing zeros by as few horizontal and vertical lines as possible. One such covering is that shown in Tableau 4B; another, equally good, is obtained by replacing the line through row 3 by a line through column 4. The smallest uncovered element is 1, appearing in the (2, 2) position. Subtracting 1 from every uncovered element in Tableau 4B and adding 1 to every element covered by two lines—the (1, 5), (1, 6), (3, 5), (3, 6), (5, 5), and (5, 6) elements—we arrive at Tableau 4C.

Tableau 4C also does not contain a feasible zero-cost assignment. Repeating Step 3 of the Hungarian method, we determine that 1 is again the smallest uncovered element. Subtracting it from each uncovered element and adding it to every element covered by two lines, we obtain Tableau 4D, which does contain a feasible zero-cost assignment, as indicated by the starred entries. Thus, an optimal allocation is swimmer 1 to event 1 (backstroke), swimmer 2 to event 3 (butterfly), swimmer 3 to event 4 (freestyle), and swimmer 5 to event 2 (breaststroke); swimmers 4 and 6 are not entered in the medley. The minimum total time (in seconds) is calculated from Tableau 4A as

$$z^* = c_{11} + c_{23} + c_{34} + c_{52} = 65 + 65 + 55 + 69 = 254 \text{ s}$$

This solution, however, is not the only optimal one. An equally optimal assignment can be obtained from Tableau 4D: assign swimmer 1 to event 3 and swimmer 2 to event 1, leaving the other assignments unchanged.

Events

Swimmers	1	2	3	4	5	6
1	65	73	63	57	0	0
2	67	70	65	58	0	0
3	68	72	69	55	0	0
4	67	75	70	59	0	0
5	71	69	75	57	0	0
6	69	71	66	59	0	0

Tableau 4A

	1	2	3	4	5	6
1	~~0~~	~~4~~	~~0~~	~~2~~	~~0~~	~~0~~
2	2	1	2	3	0	0
3	~~3~~	~~3~~	~~6~~	~~0~~	~~0~~	~~0~~
4	2	6	7	4	0	0
5	~~6~~	~~0~~	~~12~~	~~2~~	~~0~~	~~0~~
6	4	2	3	4	0	0

Tableau 4B

	1	2	3	4	5	6
1	~~0~~	~~4~~	~~0~~	~~2~~	~~1~~	~~1~~
2	1	0	1	2	0	0
3	~~3~~	~~3~~	~~6~~	~~0~~	~~1~~	~~1~~
4	1	5	6	3	0	0
5	6	0	12	2	1	1
6	3	1	2	3	0	0

Tableau 4C

	1	2	3	4	5	6
1	0*	5	0	2	2	2
2	0	0	0*	1	0	0
3	3	4	6	0*	2	2
4	0	5	5	2	0*	0
5	5	0*	11	1	1	1
6	2	1	1	2	0	0*

Tableau 4D

9.5 Verify the Hungarian method.

As a consequence of Problem 8.14 (remember that the assignment problem is a special transportation problem), Step 1 of the Hungarian method does not alter the optimal assignment, but simply provides a cost matrix with smaller entries. Since each element in this new cost matrix is nonnegative, a zero-cost assignment, if feasible, must be optimal. Thus Step 2 of the method. If no zero-cost feasible solution exists, then the zeros in the current cost matrix are not well distributed.

Step 3 is a procedure for redistributing and, perhaps, introducing additional zeros. The operations involving c, the smallest (positive) cost not covered by a line in the current matrix, replace the current matrix by a new nonnegative matrix such that (i) the element c itself is replaced by a zero, (ii) those old zeros covered by a single line are retained, and (iii) the rest of the old zeros are replaced by c. But since these operations are equivalent to subtracting $c/2$ from each uncovered row and each uncovered column, and adding $c/2$ to each covered row and each covered column, Problem 8.14 once more guarantees that the optimal assignment is unaltered.

9.6 Xanadu National Airlines offers an excursion at one low price that allows a person to cover its entire service route. The ticket, which is valid for two weeks from the date of purchase, carries the following restriction: No city on the route can be revisited except the city of origin, which can be the last stop on the excursion. A foreign tourist, presently in city 1 (the capital), wishes to see provincial cities 2, 3, and 4, before returning to the capital; she decides to travel on the airlines. Flight times (in minutes) between the cities of interest are given in the table below, where dotted entries signify that service between corresponding locations is not available. Determine an acceptable itinerary which will minimize her total flight time.

Cities	1	2	3	4
1	···	65	53	37
2	65	···	95	···
3	53	95	···	81
4	37	···	81	···

	1	2	3	4
1	10000	65	53	37*
2	65	10000	95*	10000
3	53	95*	10000	81
4	37*	10000	81	10000

Tableau 6A

We begin by replacing each dotted entry in the timetable by an exorbitant number of prohibit assignments to those links under an optimal itinerary. The result is Tableau 6A. Applying the Hungarian method to this tableau, we obtain (on the second application of Step 2) the assignment indicated by the starred elements; namely, $1 \to 4$, $4 \to 1$, $2 \to 3$, $3 \to 2$. This is *not* a valid itinerary, for it returns the tourist to city 1 immediately after her first stop in city 4.

	1	2	3	4
1	10000	65*	53	10000
2	65	10000	95*	10000
3	53	95	10000	81*
4	37*	10000	81	10000

Tableau 6B

	1	2	3	4
1	10000	10000	10000	37*
2	65*	10000	95	10000
3	53	95*	10000	10000
4	10000	10000	81*	10000

Tableau 6C

We now branch on the starred element $c_{14} = 37$ of Tableau 6A. The first branch is effected by replacing c_{14} by a prohibitively large number, as shown in Tableau 6B. The second branch is effected by replacing c_{41}, the transposed element, as well as all elements in the fourth row or first column except c_{14} itself, by a prohibitively large number. This is done in Tableau 6C.

Applying the Hungarian method to each of these two new cost matrices separately, we obtain valid itineraries for both: $1 \to 2$, $2 \to 3$, $3 \to 4$, $4 \to 1$, with a cost of 278 min, for Tableau 6B; and $1 \to 4$, $4 \to 3$, $3 \to 2$, $2 \to 1$, with a cost of 278 min, for Tableau 6C. Both solutions are optimal. Indeed, whenever the cost matrix is symmetric, an optimal circuit remains optimal when described in the opposite sense.

9.7 Develop a "near-optimal" algorithm for the traveling salesperson problem.

We develop the *nearest-neighbor method*, based on the principle of sequentially selecting the cheapest remaining link such that its inclusion does not complete a circuit too soon.

STEP 1: Locate the smallest element in the cost matrix (break ties arbitrarily), circle it, and include the corresponding link in the itinerary.

STEP 2: If the newly circled element is c_{pq}, replace all other elements in the pth row and all other elements in the qth column, as well as the transposed element c_{qp}, by a prohibitively large number.

STEP 3: Locate the smallest uncircled element in the latest cost matrix. Tentatively adjoin its corresponding link to the (incomplete) itinerary. If the resulting itinerary is feasible, circle the designated cost and go to Step 5.

STEP 4: If the resulting itinerary is infeasible, remove the latest link from the itinerary and replace its corresponding cost by a prohibitively large number. Go to Step 3.

STEP 5: Determine whether the itinerary is complete. If so, accept it as the near-optimal one. If not, go to Step 2.

Step 2 ensures that a location, once left, will not be left again, and that a location, once entered, will not be entered again. Hence, the tentative itinerary of Step 3 will be feasible, unless it contains a circuit of fewer than n links.

9.8 Use the nearest-neighbor method (Problem 9.7) to find a near-optimal, traveling salesperson itinerary, if the cost matrix is given by Tableau 8A.

	1	2	3	4	5
1	···	35	80	105	165
2	35	···	45	20	80
2	80	45	···	30	75
4	105	20	30	···	60
5	165	80	75	60	···

Tableau 8A

	1	2	3	4	5
1	1000	35	80	105	165
2	35	1000	45	20	80
3	80	45	1000	30	75
4	105	20	30	1000	60
5	165	80	75	60	1000

Tableau 8B

We first replace the dotted entries in the cost matrix with a prohibitively large number (1000), thereby obtaining Tableau 8B. The smallest entry in this tableau is either c_{24} or c_{42}. Arbitrarily choosing c_{24}, we circle it, indicating that we have accepted link $2 \to 4$ as part of the final itinerary. We then replace all other elements in the second row and all other elements in the fourth column, as well as the transposed element c_{42}, by 1000. The result is Tableau 8C.

The smallest uncircled element in Tableau 8C is $c_{43} = 30$. Adjoining link $4 \to 3$ to the current incomplete itinerary, we have the (still incomplete) itinerary $2 \to 4$, $4 \to 3$, which is feasible. Consequently, we circle c_{43} and replace all other elements in the fourth row and all other elements in the third column of Tableau 8C, as well as the transposed element c_{34}, by 1000. The result is Tableau 8D.

The smallest uncircled element in Tableau 8D is $c_{12} = 35$. Adjoining link $1 \to 2$ to the current incomplete itinerary, we generate the itinerary $1 \to 2$, $2 \to 4$, $4 \to 3$, which is feasible. Consequently, we circle c_{12} and replace all other elements in the first row and all other elements in the second column of Tableau 8D, as well as the transposed element c_{21}, by 1000. The result is Tableau 8E.

Continuing with the algorithm, we generate sequentially Tableaux 8F and 8G. The itinerary indicated

	1	2	3	4	5
1	1000	35	80	1000	165
2	1000	1000	1000	20	1000
3	80	45	1000	1000	75
4	105	1000	30	1000	60
5	165	80	75	1000	1000

Tableau 8C

	1	2	3	4	5
1	1000	35	1000	1000	165
2	1000	1000	1000	20	1000
3	80	45	1000	1000	75
4	1000	1000	30	1000	1000
5	165	80	1000	1000	1000

Tableau 8D

by the circled elements in Tableau 8G—namely, $1 \to 2$, $2 \to 4$, $4 \to 3$, $3 \to 5$, $5 \to 1$—is complete and is, therefore, the near-optimal one. Its total cost is

$$z = 35 + 20 + 75 + 30 + 165 = 325$$

See also Problem 9.17.

	1	2	3	4	5
1	1000	35	1000	1000	1000
2	1000	1000	1000	20	1000
3	80	1000	1000	1000	75
4	1000	1000	30	1000	1000
5	165	1000	1000	1000	1000

Tableau 8E

	1	2	3	4	5
1	1000	35	1000	1000	1000
2	1000	1000	1000	20	1000
3	1000	1000	1000	1000	75
4	1000	1000	30	1000	1000
5	165	1000	1000	1000	1000

Tableau 8F

	1	2	3	4	5
1	1000	35	1000	1000	1000
2	1000	1000	1000	20	1000
3	1000	1000	1000	1000	75
4	1000	1000	30	1000	1000
5	165	1000	1000	1000	1000

Tableau 8G

9.9 Apply the nearest-neighbor method to Problem 9.6.

The smallest entry in Tableau 6A, an initial cost matrix for this problem, is either c_{14} or c_{41}. We arbitrarily circle c_{14} and then replace all other elements in the first row, all other elements in the fourth column, and c_{41}, by a prohibitively large number. The result is Tableau 9A.

	1	2	3	4
1	10000	10000	10000	37
2	65	10000	95	10000
3	53	95	10000	10000
4	10000	10000	81	10000

Tableau 9A

	1	2	3	4
1	10000	10000	10000	37
2	10000	10000	95	10000
3	53	10000	10000	10000
4	10000	10000	81	10000

Tableau 9B

Applying the nearest-neighbor algorithm to Tableau 9A, we obtain Tableau 9B with the partially completed itinerary $3 \to 1$, $1 \to 4$. The smallest entry in Tableau 9B is $c_{43} = 81$. Adjoining link $4 \to 3$ to the current itinerary yields $4 \to 3$, $3 \to 1$, $1 \to 4$, which is not feasible, since it is a circuit that omits city 2. Accordingly, we do not accept $4 \to 3$ as part of the final itinerary, and we replace its cost, c_{43}, with a large number. The result is Tableau 9C.

	1	2	3	4
1	10000	10000	10000	37
2	10000	10000	95	10000
3	53	10000	10000	10000
4	10000	10000	10000	10000

Tableau 9C

	1	2	3	4
1	10000	10000	10000	37
2	10000	10000	95	10000
3	53	10000	10000	10000
4	10000	10000	10000	10000

Tableau 9D

Continuing with the algorithm, we obtain after two more iterations Tableau 9D. The near-optimal solution suggested by the circled cost elements is $1 \to 4$, $4 \to 2$, $2 \to 3$, $3 \to 1$, *with*

$$z = 37 + 10\,000 + 95 + 53 = 10\,185$$

This value of the objective function is prohibitively high; in this case, the "near-optimal" solution is actually far from optimal.

Supplementary Problems

9.10 A manufacturer receives an order from a large city for six doubledecker buses, to be delivered two at a time over the next three months. Production data for the manufacturer are shown in Table 9-2.

Table 9-2

	Months		
	1	2	3
Regular Production Capacity, units	1	2	3
Overtime Production Capacity, units	2	2	2
Regular Production Cost, \$1000/unit	35	43	40
Overtime Production Cost, \$1000/unit	39	47	45

Buses can be delivered to the city at the end of the same month in which they are assembled, or they can be stored by the manufacturer, at a cost of \$3000 per bus per month, for shipment during a later month. The manufacturer has no current inventory of these doubledecker buses and desires none after the completion of this contract. Determine a production schedule that will meet the city's demands at minimum cost to the manufacturer.

9.11 A drug company estimates demand (in millions of doses) for one of its vaccines as follows: October, 7.1; November, 13.2; December, 12.8; January, 7.7; and February, 2.1. There is relatively little demand for the vaccine during the other months, and company policy for supplying these demands is to have 1 million doses in inventory at the end of February. The vaccine takes four weeks to produce, so no doses are available for shipping during the month they are produced. Once the vaccine is ready, however, it can either be shipped immediately to customers or carried forward as inventory at a cost of 10¢ per dose per month. Traditionally, the company produces the vaccine only between August and December inclusively. Any vaccine remaining in inventory from the previous year is destroyed on September 1.

The company's production capacities (in millions of doses) and the anticipated production costs (in cents per dose) for each month of the upcoming production cycle are as follows:

	August	September	October	November	December
Capacity	12.5	11.0	9.5	8.1	5.5
Cost	63	68	75	52	48

Determine a production schedule that meets all demands at minimum total cost.

9.12 Determine a minimum-cost shipping schedule for the transshipment problem depicted in Fig. 9-3.

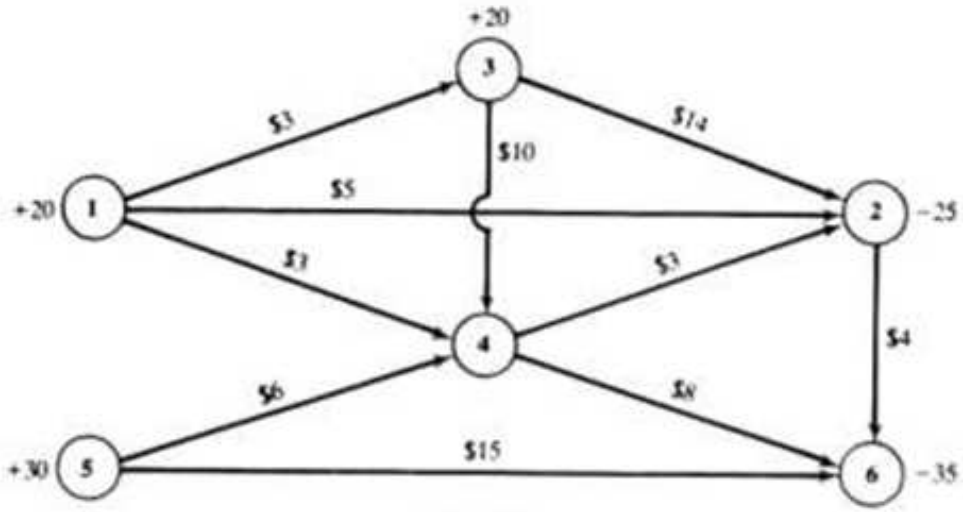

Fig. 9-3

9.13 An automobile manufacturer has orders from locations 5, 6, and 7 for 75, 60, and 80 units, respectively, of a particular model. The production process consists in making the body either at location 1 or 2; shipping the body either to location 3 or 4, where it is assembled onto the rest of the car; and then shipping the entire unit to the waiting customer. Production costs per body are \$533 at location 1 and \$550 at location 2. Assembly costs at locations 3 and 4 are \$2256 and \$2239, respectively. Transportation costs (in dollars) between locations are as follows:

Locations	3	4
1	45	59
2	65	52

Locations	5	6	7
3	72	65	79
4	81	74	63

Production capacities at locations 1 and 2 are 150 and 170 bodies, respectively; locations 3 and 4 can assemble all the bodies forwarded to them. Determine a production and shipping schedule that will meet all demands at minimum cost. (*Hint*: Set up as a transshipment problem.)

9.14 A rent-a-car company has an excess of cars in some cities and a shortage in others. In particular, cities 1 and 2 have surpluses of 15 and 12 cars, respectively, while cities 3, 4, and 5 need 7, 18, and 9 additional cars, respectively. Cars can be shipped directly between locations, or they can be shipped through intermediate cities where the company has agencies. If shipping costs (in dollars per car) are as given in Tableau 14, determine a minimum-cost shipping schedule for the rent-a-car company.

Cities	1	2	3	4	5
1	···	7	12	25	65
2	7	···	22	25	75
3	12	22	···	17	28
4	25	25	17	···	15
5	65	75	28	15	···

Tableau 14

9.15 A fast-food chain wants to build four stores in the Chicago area. In the past, the chain has used six different construction companies, and, having been satisfied with each, has invited each to bid on each job. The final bids (in thousands of dollars) were as shown in Table 9-3.

Table 9-3

	Construction Companies					
	1	2	3	4	5	6
Store 1	85.3	88	87.5	82.4	89.1	86.7
Store 2	78.9	77.4	77.4	76.5	79.3	78.3
Store 3	82	81.3	82.4	80.6	83.5	81.7
Store 4	84.3	84.6	86.2	83.3	84.4	85.5

Since the fast-food chain wants to have each of the new stores ready as quickly as possible, it will award at most one job to a construction company. What assignment results in minimum total cost to the fast-food chain?

9.16 Solve Problem 1.23.

9.17 Find an exact solution to Problem 9.8 and compare it with the near-optimal itinerary obtained therein.

9.18 The following tableau is the (unsymmetric) cost matrix for travel among a particular set of locations. Determine a minimum-cost, traveling salesperson itinerary.

Cities	1	2	3	4	5
1	···	1	8	3	4
2	1	···	8	2	3
3	1	3	···	5	1
4	2	5	6	···	5
5	5	3	7	6	···

9.19 Use the nearest-neighbor method to find a near-optimal itinerary for Problem 9.18.

9.20 Show that the branching process for the traveling salesperson problem creates two new problems, in one of which link $p \to q$ must be taken and in the other of which link $p \to q$ must not be taken.

9.21 Show by means of an example that an optimal itinerary for the traveling salesperson problem may not still be optimal when the constraint that each location be visited *only once* is dropped.

Chapter 10

Nonlinear Programming: Single-Variable Optimization

THE PROBLEM

A one-variable, unconstrained, nonlinear program has the form

$$\text{optimize:} \quad z = f(x) \tag{10.1}$$

where $f(x)$ is a (nonlinear) function of the single variable x, and the search for the optimum (maximum or minimum) is conducted over the infinite interval $(-\infty, \infty)$. If the search is restricted to a finite subinterval $[a, b]$, then the problem becomes

$$\begin{aligned} \text{optimize:} \quad & z = f(x) \\ \text{subject to:} \quad & a \le x \le b \end{aligned} \tag{10.2}$$

which is a one-variable, constrained program.

LOCAL AND GLOBAL OPTIMA

An objective function $f(x)$ has a *local* (or *relative*) *minimum* at x_0 if there exists a (small) interval centered at x_0 such that $f(x) \ge f(x_0)$ for all x in this interval at which the function is defined. If $f(x) \ge f(x_0)$ for all x at which the function is defined, then the minimum at x_0 (besides being local) is a *global* (or *absolute*) minimum. Local and global maxima are defined similarly, in terms of the reversed inequality.

Example 10.1 The function graphed in Fig. 10-1 is defined only on $[a, b]$. It has relative minima at a, x_2, and x_4; relative maxima at x_1, x_3, and b; a global minimum at x_2; and global maxima at x_1 and b.

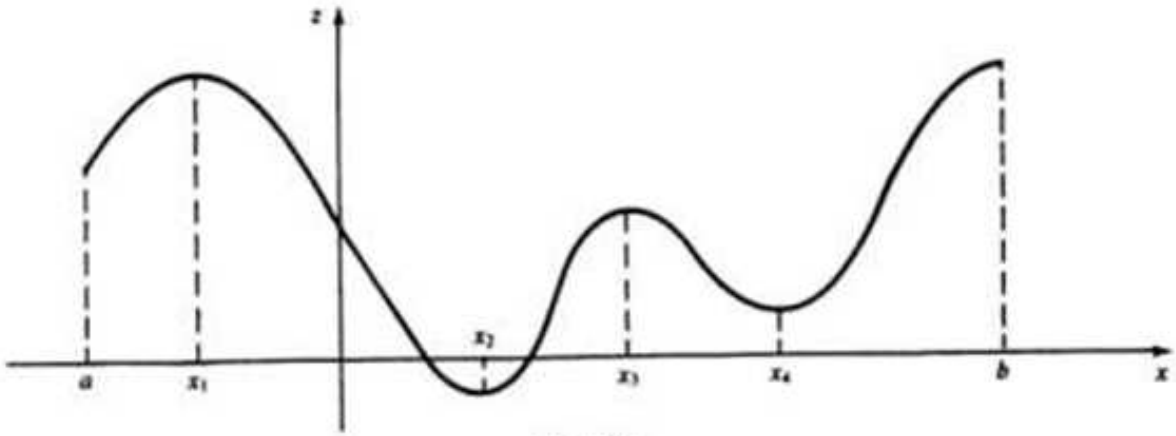

Fig. 10-1

Program (*10.1*) seeks a global optimum; program (*10.2*) does too, insofar as it seems the best of the local optima over $[a, b]$. It is possible that the objective function assumes even better values outside $[a, b]$, but these are not of interest.

RESULTS FROM CALCULUS

Theorem 10.1: If $f(x)$ is continuous on the closed and bounded interval $[a, b]$, then $f(x)$ has global optima (both a maximum and a minimum) on this interval.

Theorem 10.2: If $f(x)$ has a local optimum at x_0 and if $f(x)$ is differentiable on a small interval centered at x_0, then $f'(x_0) = 0$.

Theorem 10.3: If $f(x)$ is twice-differentiable on a small interval centered at x_0, and if $f'(x_0) = 0$ and $f''(x_0) > 0$, then $f(x)$ has a local minimum at x_0. If instead $f'(x_0) = 0$ and $f''(x_0) < 0$, then $f(x)$ has a local maximum at x_0.

It follows from the first two theorems that if $f(x)$ is continuous on $[a, b]$, then local and global optima for program (*10.2*) will occur among points where $f'(x)$ does not exist, or among points where $f'(x) = 0$ (generally called *stationary* or *critical points*), or among the endpoints $x = a$ and $x = b$. (See Problems 10.1 through 10.3).

Since program (*10.1*) is not restricted to a closed and bounded interval, there are no endpoints to consider. Instead, the values of the objective function at the stationary points and at points where $f'(x)$ does not exist are compared to the limiting values of $f(x)$ as $x \to \pm\infty$. It may be that neither limit exists (consider $f(x) = \sin x$). But if either limit does exist—and we accept $\pm\infty$ as a "limit" here—and yields the best value of $f(x)$ (the largest for a maximization program or the smallest for a minimization program), then a global optimum for $f(x)$ does not exist. If the best value occurs at one of the finite points, then this best value is the global optimum. (See Problem 10.4.)

SEQUENTIAL-SEARCH TECHNIQUES

In practice, locating optima by calculus is seldom fruitful: either the objective function is not known analytically, so that differentiation is impossible, or the stationary points cannot be obtained algebraically. (See Problem 10.5.) In such cases, numerical methods are used to approximate the location of (some) local optima to within an acceptable tolerance.

Sequential-search techniques start with a finite interval in which the objective function is presumed *unimodal*; that is, the interval is presumed to include one and only one point at which $f(x)$ has a local maximum or minimum. The techniques then systematically shrink the interval around the local optimum until the optimum is confined to within acceptable limits; this shrinking is effected by sequentially evaluating the objective function at selected points and then using the unimodal property to eliminate portions of the current interval.

Example 10.2 Figure 10-2 exhibits the values of the objective function at the points x_1 and x_2. If a local minimum is known to be the only extremum in $[a, b]$, then this minimum must be to the left of x_2; for $f(x)$ has begun to increase by that point, and, by the unimodal property, must continue to increase to the right of it. Hence, the subinterval $(x_2, b]$ can be discarded.

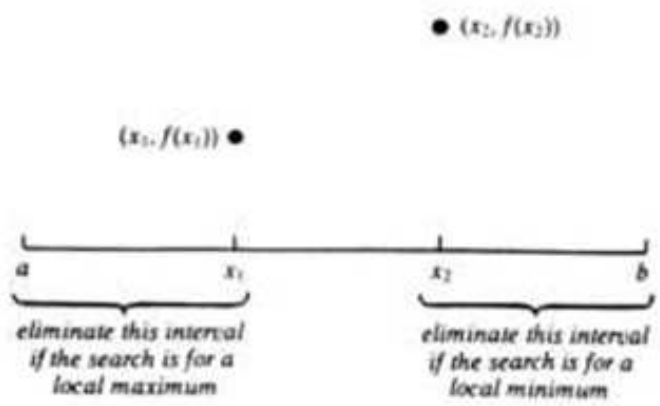

Fig. 10-2

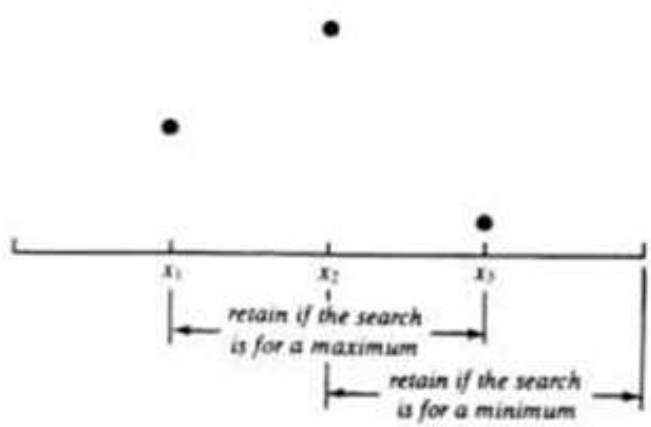

Fig. 10-3

If a local maximum is the sole extremum in $[a, b]$, then it must be located to the right of x_1, and the subinterval $[a, x_1)$ can be discarded.

Specific sequential searches are considered in the three sections that follow.

THREE-POINT INTERVAL SEARCH

The interval under consideration is divided into quarters and the objective function evaluated at the three equally spaced interior points. The interior point yielding the best value of the objective is determined (in case of a tie, arbitrarily choose one point), and the subinterval centered at this point and made up of two quarters of the current interval replaces the current interval. Including ties, there are 10 possible sampling patterns; one of them is illustrated in Fig. 10-3. (See Problems 10.6 and 10.7.)

The three-point interval search is the most efficient *equally spaced* search procedure in terms of achieving a prescribed tolerance with a minimum number of functional evaluations. It is also one of the easiest sequential searches to code for the computer.

FIBONACCI SEARCH

The *Fibonacci sequence*, $\{F_n\} = \{1, 1, 2, 3, 5, 8, 13, 21, 34, 55, \ldots\}$, forms the basis of the most efficient sequential-search technique. Each number in the sequence is obtained by adding together the two preceding numbers; exceptions are the first two numbers, F_0 and F_1, which are both 1.

The Fibonacci search is initialized by determining the smallest Fibonacci number that satisfies $F_N\epsilon \geq b - a$, where ϵ is a prescribed tolerance and $[a, b]$ is the original interval of interest. Set $\epsilon' \equiv (b - a)/F_N$. The first two points in the search are located $F_{N-1}\epsilon'$ units in from the endpoints of $[a, b]$, where F_{N-1} is the Fibonacci number preceding F_N. Successive points in the search are considered one at a time and are positioned $F_j\epsilon'$ $(j = N - 2, N - 3, \ldots, 2)$ units in from the *newest* endpoint of the current interval. (See Problem 10.8.) Observe that with the Fibonacci procedure we can state in advance the number of functional evaluations that will be required to achieve a certain accuracy; moreover, that number is independent of the particular unimodal function.

GOLDEN-MEAN SEARCH

A search nearly as efficient as the Fibonacci search is based on the number $(\sqrt{5} - 1)/2 = 0.6180\cdots$, known as the *golden mean*. The first two points of the search are located $(0.6180)(b - a)$ units in from the endpoints of the initial interval $[a, b]$. Successive points are considered one at a time and are positioned $0.6180L_i$ units in from the *newest* endpoint of the current interval, where L_i denotes the length of this interval. (See Problem 10.9.)

CONVEX FUNCTIONS

Search procedures are guaranteed to approximate global optima on a search interval only when the objective function is unimodal there. In practice, one usually does not know whether a particular objective function is unimodal over a specified interval. When a search procedure is applied in such a situation, there is no assurance it will uncover the desired global optimum. (See Problem 10.11.) Exceptions include programs that have convex or concave objective functions.

A function $f(x)$ is *convex* on an interval $\mathscr{I}$ (finite or infinite) if for any two points x_1 and x_2 in $\mathscr{I}$ and for all $0 \leq \alpha \leq 1$,

$$f(\alpha x_1 + (1 - \alpha)x_2) \leq \alpha f(x_1) + (1 - \alpha) f(x_2) \tag{10.3}$$

If (*10.3*) holds with the inequality reversed, then $f(x)$ is *concave*. Thus, the negative of a convex function is concave, and conversely. The graph of a convex function is shown in Fig. 10-4; a defining geometrical

property is that the curve lies on or above any of its tangents. Convex functions and concave functions are unimodal.

Theorem 10.4: If $f(x)$ is twice-differentiable on $\mathscr{I}$, then $f(x)$ is convex on $\mathscr{I}$ if and only if $f''(x) \geq 0$ for all x in $\mathscr{I}$. It is concave if and only if $f''(x) \leq 0$ for all x in $\mathscr{I}$.

Theorem 10.5: If $f(x)$ is convex on $\mathscr{I}$, then any local minimum on $\mathscr{I}$ is a global minimum on $\mathscr{I}$. If $f(x)$ is concave on $\mathscr{I}$, then any local maximum on $\mathscr{I}$ is a global maximum on $\mathscr{I}$.

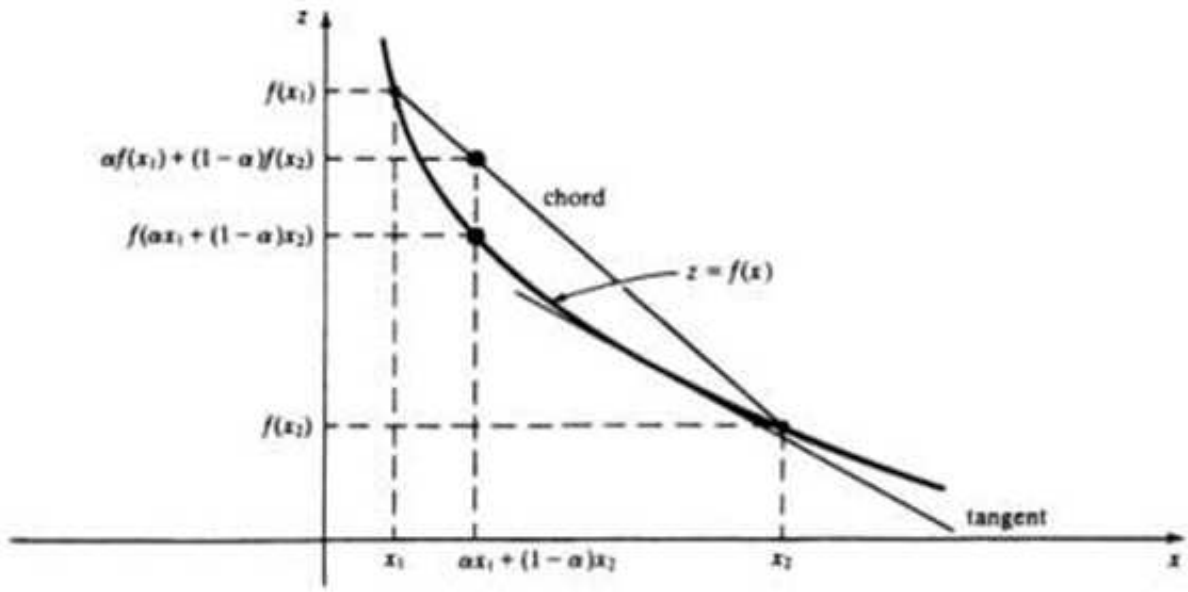

Fig. 10-4

If (*10.3*) holds with strict inequality except at $\alpha = 0$ and $\alpha = 1$, the function is *strictly convex*. Such a function has a strictly positive second derivative, and any local (and therefore global) minimum is unique. Analogous results hold for *strictly concave* functions.

Solved Problems

10.1 Maximize: $z = x(5\pi - x)$ on $[0, 20]$.

Here $f(x) = x(5\pi - x)$ is continuous, and $f'(x) = 5\pi - 2x$. With the derivative defined everywhere, the global maximum on $[0, 20]$ occurs at an endpoint $x = 0$ or $x = 20$, or at a stationary point, where $f'(x) = 0$. We find $x = 5\pi/2$ as the only stationary point in $[0, 20]$. Evaluating the objective function at each of these points, we obtain the table

x	0	$5\pi/2$	20
$f(x)$	0	61.69	−85.84

from which we conclude that $x^* = 5\pi/2$, with $z^* = 61.69$.

10.2 Maximize: $z = |x^2 - 8|$ on $[-4, 4]$.

Here

$$f(x) = |x^2 - 8| = \begin{cases} x^2 - 8 & x \le -\sqrt{8} \\ 8 - x^2 & -\sqrt{8} \le x \le \sqrt{8} \\ x^2 - 8 & \sqrt{8} \le x \end{cases}$$

is a continuous function, with

$$f'(x) = \begin{cases} 2x & x < -\sqrt{8} \\ -2x & -\sqrt{8} < x < \sqrt{8} \\ 2x & \sqrt{8} < x \end{cases}$$

The derivative does not exist at $x = \pm\sqrt{8}$, and it is zero at $x = 0$; all three points are in $[-4, 4]$. Evaluating the objective function at each of these points, and at the endpoints $x = \pm 4$, we generate the table

x	-4	$-\sqrt{8}$	0	$\sqrt{8}$	4
$f(x)$	8	0	8	0	8

from which we conclude that the global maximum on $[-4, 4]$ is $z^* = 8$, which is assumed at the three points $x^* = \pm 4$ and $x^* = 0$.

10.3 Minimize: $z = f(x)$ on $[0, 1]$, where

$$f(x) = \begin{cases} 1 & x = 0 \\ x & 0 < x \le 1 \end{cases}$$

Theorem 10.1 does not apply if the function is discontinuous on the interval of interest, as it is here. In fact, no local or global minimum exists for this problem, since the function assumes arbitrarily small positive values but not the value zero.

10.4 Maximize: $z = xe^{-x^2}$.

Here

$$f'(x) = e^{-x^2} - 2x^2e^{-x^2} = e^{-x^2}(1 - 2x^2)$$

which is defined for all x and which vanishes only at $x = \pm 1/\sqrt{2}$. Since x is unrestricted, the values of the objective function at the stationary points,

$$f(\pm 1/\sqrt{2}) = \pm \frac{1}{\sqrt{2}} e^{-1/2} = \pm 0.429$$

must be compared to the limiting values of $f(x)$ as $x \to \pm\infty$, which are both 0 in this case. Recording these results,

x	$x \to -\infty$	$-1/\sqrt{2}$	$1/\sqrt{2}$	$x \to \infty$
$f(x)$	0	-0.429	0.429	0

we see that a global maximum exists at $x^* = 1/\sqrt{2}$ and is $z^* = 0.429$.

10.5 Minimize: $z = x \sin 4x$ on $[0, 3]$.

Here $f'(x) = \sin 4x + 4x \cos 4x$, which is defined everywhere. The equation for the stationary points,

$$\sin 4x + 4x \cos 4x = 0$$

cannot be solved algebraically, so that we are unable precisely to identify the stationary points in $[0, 3]$. However, in the case of simple functions like this one, a good deal can be learned from a rough graph

Fig. 10-5). It is seen that the stationary points alternate with the zeros of $f(x)$ (Rolle's theorem), which are the zeros of $\sin 4x$. The global minimum of $f(x)$ on $[0, 3]$ must be attained in the subinterval $[7\pi/8, 3]$, i.e.,

$$2.75 \le x^* \le 3$$

because that is the region in which the negative values of $\sin 4x$ are multiplied by the largest positive values of x. Making the evaluations

$$f(7\pi/8) = \frac{7\pi}{8}(-1) = -2.75$$
$$f(3) = 3 \sin 12 = -1.61$$

we conclude that the global minimum is attained at the second local minimum of $f(x)$, the one *near* $x = 7\pi/8$, and not at the endpoint $x = 3$.

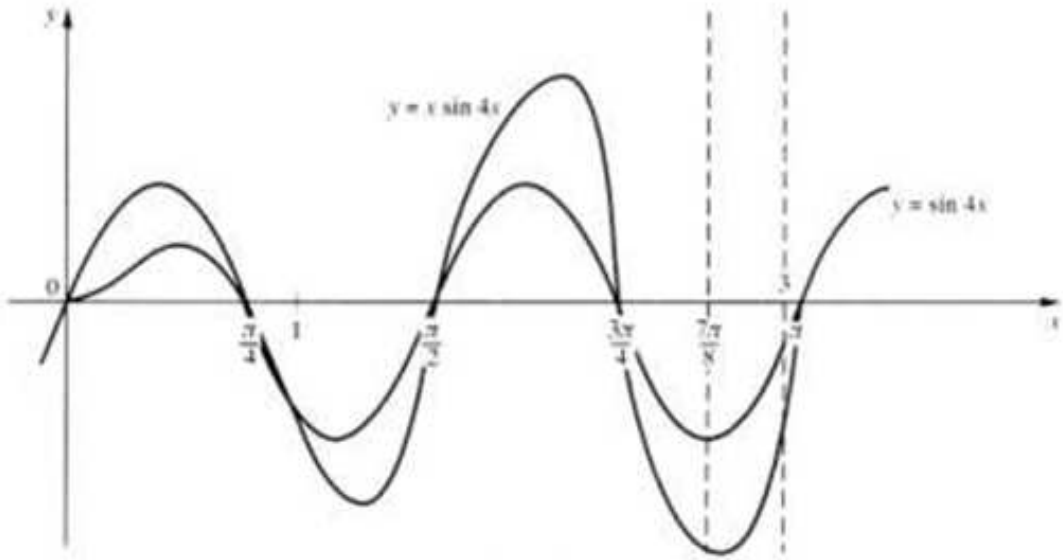

Fig. 10-5

10.6 Use the three-point interval search to approximate the location of the global minimum of $f(x) = x \sin 4x$ on $[0, 3]$ to within $\epsilon = 0.01$.

As a result of the graphical analysis done in Problem 10.5, we restrict attention to the subinterval $[7\pi/8, 3]$. The global minimum occurs in this subinterval and the function is unimodal there.

First iteration: Dividing $[7\pi/8, 3]$ into quarters, we take $x_1 = 2.8117$, $x_2 = 2.8744$, and $x_3 = 2.9372$ as the three interior points and calculate

$$f(x_1) = x_1 \sin 4x_1 = 2.8117 \sin 4(2.8117) = -2.7234$$
$$f(x_2) = x_2 \sin 4x_2 = 2.8744 \sin 4(2.8744) = -2.5197$$
$$f(x_3) = x_3 \sin 4x_3 = 2.9372 \sin 4(2.9372) = -2.1426$$

Here, x_1 is the interior point yielding the smallest value of $f(x)$; so we take the subinterval centered at x_1, namely $[7\pi/8, 2.8744]$, as the new interval of interest.

Second iteration: Dividing $[7\pi/8, 2.8744]$ into quarters, we have $x_4 = 2.7803$, $x_1 = 2.8117$, and $x_5 = 2.8430$ as the three interior points of this new interval. Thus

$$f(x_4) = x_4 \sin 4x_4 = 2.7803 \sin 4(2.7803) = -2.7584$$
$$f(x_1) = -2.7234 \quad \text{(as before)}$$
$$f(x_5) = x_5 \sin 4x_5 = 2.8430 \sin 4(2.8430) = -2.6439$$

Of these interior points, x_4 yields the smallest value of $f(x)$; so we take the subinterval centered at it, $[7\pi/8, 2.8117]$, as the new interval of interest.

Third iteration: We divide $[7\pi/8, 2.8117]$ into quarters, with $x_6 = 2.7646$, $x_4 = 2.7803$, and $x_7 = 2.7960$ as the three interior points. Then

$$f(x_6) = x_6 \sin 4x_6 = 2.7646 \sin 4(2.7646) = -2.7591$$
$$f(x_4) = -2.7584 \quad \text{(as before)}$$
$$f(x_7) = x_7 \sin 4x_7 = 2.7960 \sin 4(2.7960) = -2.7465$$

Here, x_6 is the interior point yielding the smallest value of the objective function; so the new interval of interest is the one centered at it, namely $[7\pi/8, 2.7803]$.

Fourth iteration: We divide $[7\pi/8, 2.7803]$ into quarters, with $x_8 = 2.7567$, $x_6 = 2.7646$, and $x_9 = 2.7724$ as the three new interior points. Now

$$f(x_8) = x_8 \sin 4x_8 = 2.7567 \sin 4(2.7567) = -2.7554$$
$$f(x_6) = -2.7591 \quad \text{(as before)}$$
$$f(x_9) = x_9 \sin 4x_9 = 2.7724 \sin 4(2.7724) = -2.7602$$

Since x_9 is the interior point with the smallest value of $f(x)$, we take the subinterval centered at x_9, namely $[2.7646, 2.7803]$, as the new interval of interest. The midpoint of this interval, however, is within the prescribed tolerance, $\epsilon = 0.01$, of all other points in the interval; we therefore accept it as the location of the minimum. That is,

$$x^* = x_9 = 2.7724 \qquad \text{with} \qquad z^* = f(x_9) = -2.7602$$

10.7 Use the three-point interval search to approximate the location of the maximum of $f(x) = x(5\pi - x)$ on $[0, 20]$ to within $\epsilon = 1$.

Since $f''(x) = -2 < 0$ everywhere, it follows from Theorem 10.4 that $f(x)$ is concave, hence unimodal, on $[0, 20]$. Therefore, the three-point interval search is guaranteed to converge to the global maximum.

First iteration: Dividing $[0, 20]$ into quarters, we have $x_1 = 5$, $x_2 = 10$, and $x_3 = 15$ as the three interior points. Therefore

$$f(x_1) = x_1(5\pi - x_1) = 5(5\pi - 5) = 53.54$$
$$f(x_2) = x_2(5\pi - x_2) = 10(5\pi - 10) = 57.08$$
$$f(x_3) = x_3(5\pi - x_3) = 15(5\pi - 15) = 10.62$$

Since x_2 is the interior point generating the greatest value of the objective function, we take the interval $[5, 15]$, centered at x_2, as the new interval of interest.

Second iteration: We divide $[5, 15]$ into quarters, with $x_4 = 7.5$, $x_2 = 10$, and $x_5 = 12.5$ as the three interior points. So

$$f(x_4) = x_4(5\pi - x_4) = (7.5)(5\pi - 7.5) = 61.56$$
$$f(x_2) = 57.08 \quad \text{(as before)}$$
$$f(x_5) = x_5(5\pi - x_5) = (12.5)(5\pi - 12.5) = 40.10$$

As x_4 is the interior point yielding the largest value of $f(x)$, we take the interval $[5, 10]$, centered at x_4, as the new interval of interest.

Third iteration: We divide $[5, 10]$ into quarters, with $x_6 = 6.25$, $x_4 = 7.5$, and $x_7 = 8.75$ as the new interior points. So

$$f(x_6) = (6.25)(5\pi - 6.25) = 59.11$$
$$f(x_4) = 61.56 \quad \text{(as before)}$$
$$f(x_7) = (8.75)(5\pi - 8.75) = 60.88$$

As x_4 yields the largest value of $f(x)$, we take the interval $[6.25, 8.75]$, centered at x_4, as the new interval of interest.

Fourth iteration: Dividing [6.25, 8.75] into quarters, we generate $x_8 = 6.875$, $x_4 = 7.5$, and $x_9 = 8.125$ as the new interior points. Thus

$$f(x_8) = (6.875)(5\pi - 6.875) = 60.73$$
$$f(x_4) = 61.56 \quad \text{(as before)}$$
$$f(x_9) = (8.125)(5\pi - 8.125) = 61.61$$

Now x_9 is the interior point yielding the largest value of the objective function, so we take the subinterval centered at x_9, namely [7.5, 8.75], as the new interval for consideration. The midpoint of this interval, however, is within the prescribed tolerance, $\epsilon = 1$, of all other points in the interval; hence we take

$$x^* = x_9 = 8.125 \qquad \text{with} \qquad z^* = f(x_9) = 61.61$$

10.8 Redo Problem 10.7 using the Fibonacci search.

Initial points: The first Fibonacci number such that $F_N(1) \geq 20 - 0$ is $F_7 = 21$. We set $N = 7$,

$$\epsilon' = \frac{b-a}{F_N} = \frac{20-0}{21} = 0.9524$$

and then position the first two points in the search

$$F_6\epsilon' = 13(0.9524) = 12.38 \text{ units}$$

in from each endpoint. Consequently,

$$x_1 = 0 + 12.38 = 12.38 \qquad x_2 = 20 - 12.38 = 7.62$$
$$f(x_1) = (12.38)(5\pi - 12.38) = 41.20$$
$$f(x_2) = (7.62)(5\pi - 7.62) = 61.63$$

which are plotted in Fig. 10-6(*a*). Using the unimodal property, we conclude that the maximum must occur to the left of 12.38, and we reduce the interval of interest to [0, 12.38].

First iteration: The next-lower Fibonacci number (F_6 was the last one used) is $F_5 = 8$; so the next point in the search is positioned

$$F_5\epsilon' = 8(0.9524) = 7.619 \text{ units}$$

in from the newest endpoint, 12.38. Thus

$$x_3 = 12.38 - 7.619 = 4.761$$
$$f(x_3) = (4.761)(5\pi - 4.761) = 52.12$$

Adding this point to the retained portion of Fig. 10-6(*a*), we generate Fig. 10-6(*b*), from which we conclude that the maximum must occur in the new interval of interest [4.761, 12.38].

Second iteration: The next-lower Fibonacci number now is $F_4 = 5$. Thus

$$x_4 = 4.761 + F_4\epsilon' = 4.761 + 5(0.9524) = 9.523$$
$$f(x_4) = (9.523)(5\pi - 9.523) = 58.90$$

Adding this point to the retained portion of Fig. 10-6(*b*), we obtain Fig. 10-6(*c*), from which we conclude that the new interval of interest is [4.761, 9.523].

Third iteration: The next-lower Fibonacci number now is $F_3 = 3$. Hence

$$x_5 = 9.523 - 3(0.9524) = 6.666$$
$$f(x_5) = (6.666)(5\pi - 6.666) = 60.27$$

Adding this point to the retained portion of Fig. 10-6(*c*), we obtained Fig. 10-6(*d*), and it follows from the unimodal property that the new interval of interest is [6.666, 9.523].

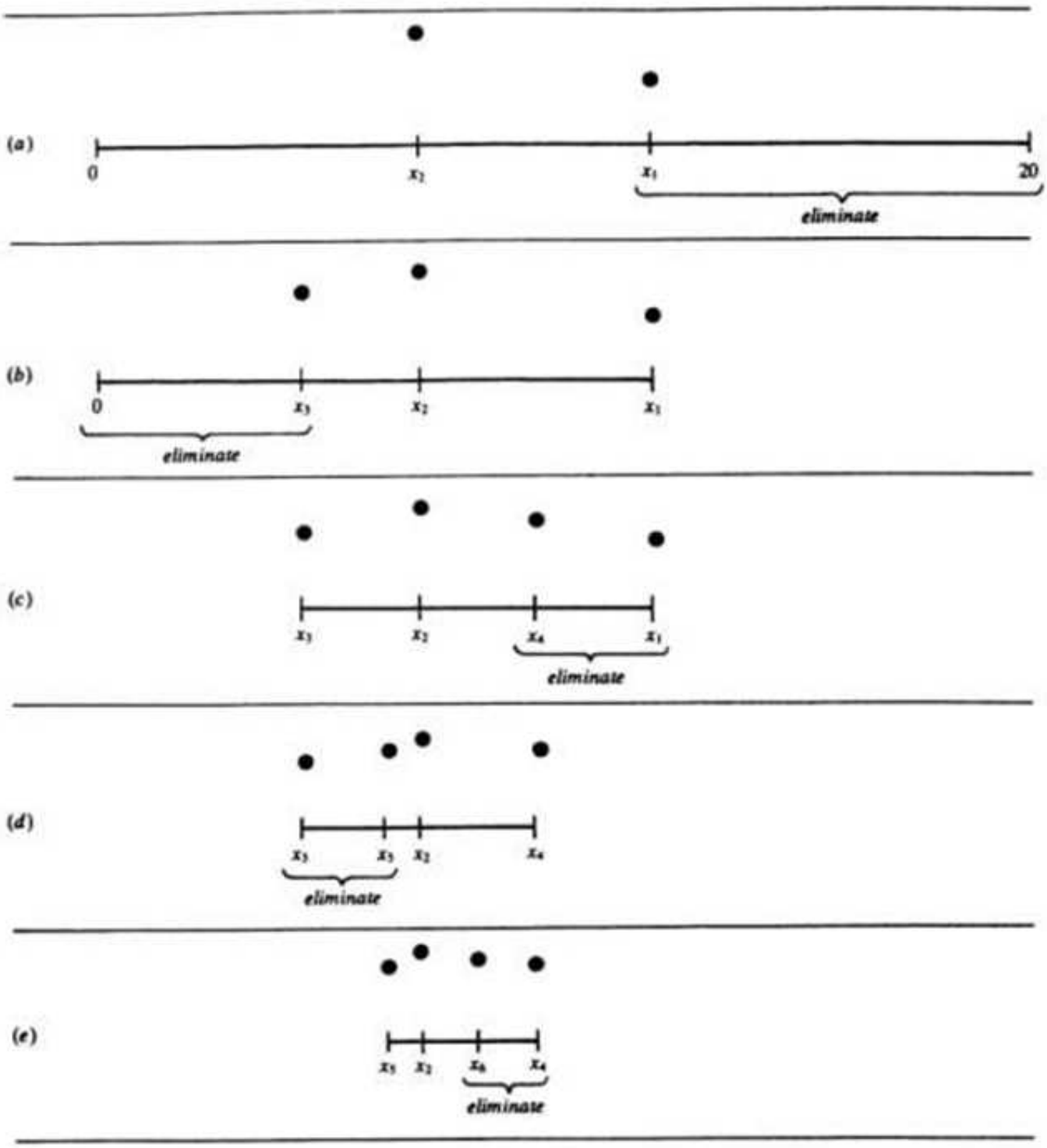

Fig. 10-6

Fourth iteration: The next-lower Fibonacci number now is $F_2 = 2$. Hence

$$x_6 = 6.666 + 2(0.9524) = 8.571$$
$$f(x_6) = (8.571)(5\pi - 8.571) = 61.17$$

Adding this point to the retained portion of Fig. 10-6(*d*), we obtained Fig. 10-6(*e*), from which we conclude that [6.666, 8.571] is the new interval of interest. The midpoint of this interval, however, is within $\epsilon = 1$ (in fact, within $\epsilon' = 0.9524$) of every other point of the interval. (Theoretically, the midpoint should coincide with x_2; the small apparent discrepancy arises from roundoff.) We therefore accept x_2 as the location of the maximum, i.e.,

$$x^* = x_2 = 7.62 \qquad \text{with} \qquad z^* = f(x_2) = 61.63$$

10.9 Redo Problem 10.7 using the golden-mean search.

Initial points: The length of the initial interval is $L_1 = 20$, so the first two points in the search are positioned

$$(0.6180)(20) = 12.36 \text{ units}$$

in from each endpoint. Thus

$$x_1 = 0 + 12.36 = 12.36 \qquad x_2 = 20 - 12.36 = 7.64$$
$$f(x_1) = (12.36)(5\pi - 12.36) = 41.38$$
$$f(x_2) = (7.64)(5\pi - 7.64) = 61.64$$

The points $(x_1, f(x_1))$ and $(x_2, f(x_2))$ are very close to the points shown in Fig. 10-6(*a*). It follows from the unimodal property that the maximum must occur to the left of 12.36; hence we retain [0, 12.36] as the new interval of interest.

First iteration: The new interval has length $L_2 = 12.36$, so the next point in the search is positioned $0.6180L_2$ units in from the newest endpoint. Therefore,

$$x_3 = 12.36 - (0.6180)(12.36) = 4.722$$
$$f(x_3) = (4.722)(5\pi - 4.722) = 51.88$$

When this new point is added, Fig. 10-6(*b*) applies, and we determine [4.722, 12.36] as the new interval of interest.

Second iteration: $L_3 = 12.36 - 4.722 = 7.638$; thus

$$x_4 = 4.722 + (0.6180)(7.638) = 9.442$$
$$f(x_4) = (9.442)(5\pi - 9.442) = 59.16$$

Now the pattern is that of Fig. 10-6(*c*), from which we conclude that [4.722, 9.442] is the new interval of interest.

Third iteration: $L_4 = 9.442 - 4.722 = 4.720$; thus

$$x_5 = 9.442 - (0.6180)(4.720) = 6.525$$
$$f(x_5) = (6.525)(5\pi - 6.525) = 59.92$$

Now the pattern is that of Fig. 10-6(*d*), from which we conclude that [6.525, 9.442] is the new interval of interest.

Fourth iteration: $L_5 = 9.442 - 6.525 = 2.917$; hence

$$x_6 = 6.525 + (0.6180)(2.917) = 8.328$$
$$f(x_6) = (8.328)(5\pi - 8.328) = 61.46$$

With this new point, we reach the pattern of Fig. 10-6(*e*), and find [6.525, 8.328] as the new interval of interest. Notice that this new interval is of length less than $2\epsilon = 2$, but that the included sample point, x_2, is not within ϵ of *all* other points in the interval. Therefore, another iteration is required.

Fifth iteration: $L_6 = 8.328 - 6.525 = 1.803$; therefore

$$x_7 = 8.328 - (0.6180)(1.803) = 7.214$$
$$f(x_7) = (7.214)(5\pi - 7.214) = 61.28$$

This new point determines $[x_7, x_6] = [7.214, 8.328]$ as the new interval of interest. Now, however, the interior point $x_2 = 7.64$ is within $\epsilon = 1$ of all other points in the interval; so we take it as the location of the maximum. That is,

$$x^* = x_2 = 7.64 \qquad \text{with} \qquad z^* = f(x_2) = 61.64$$

10.10 Compare the efficiencies of the three search methods in locating the maximum of $x(5\pi - x)$ on [0, 20].

Each method succeeded in approximating the location of the maximum, $x^* = 5\pi/2 = 7.854$, to within $\epsilon = 1$, as required. The Fibonacci search was the most efficient (see Problem 10.8), achieving the desired accuracy with six functional evaluations. The three-point interval search (see Problem 10.7) and the golden-mean search (see Problem 10.9) required nine and seven functional evaluations, respectively.

10.11 Redo Problem 10.6 without first constricting the interval [0, 3] to a subinterval on which the function is unimodal. Discuss the result.

Applying the three-point interval search to $f(x) = x \sin 4x$ on [0, 3] directly, we generate sequentially the entries to Table 10-1. It follows that

$$x^* \approx 1.231 \qquad \text{with} \qquad z^* \approx f(x^*) = -1.203\,54$$

Table 10-1

Current Interval	Interior Points			$f(x) = x \sin 4x$		
	a	b	c	$f(a)$	$f(b)$	$f(c)$
[0, 3]	0.75	1.5	2.25	0.105 8	−0.419 1	0.927 3
[0.75, 2.25]	1.125	1.5	1.875	−1.100	−0.419 1	1.759
[0.75, 1.5]	0.9375	1.125	1.313	−0.535 8	−1.100	−1.126
[1.125, 1.5]	1.219	1.313	1.406	−1.203	−1.126	−0.861 1
[1.125, 1.313]	1.172	1.219	1.266	−1.172	−1.203	−1.189
[1.172, 1.266]	1.196	1.219	1.243	−1.193	−1.203	−1.201
[1.196, 1.243]	1.208	1.219	1.231	−1.199	−1.202 72	−1.203 54
[1.219, 1.243]	1.225	1.231	1.237	−1.203 50	−1.203 54	−1.202 8
[1.225, 1.237]						

It is apparent from Fig. 10-5 that the search procedure has converged to the local minimum near $3\pi/8$, and not to the global minimum on [0, 3] that was found in Problem 10.6. A similar result would have occurred had we applied the Fibonacci search or golden-mean search to the entire interval [0, 3].

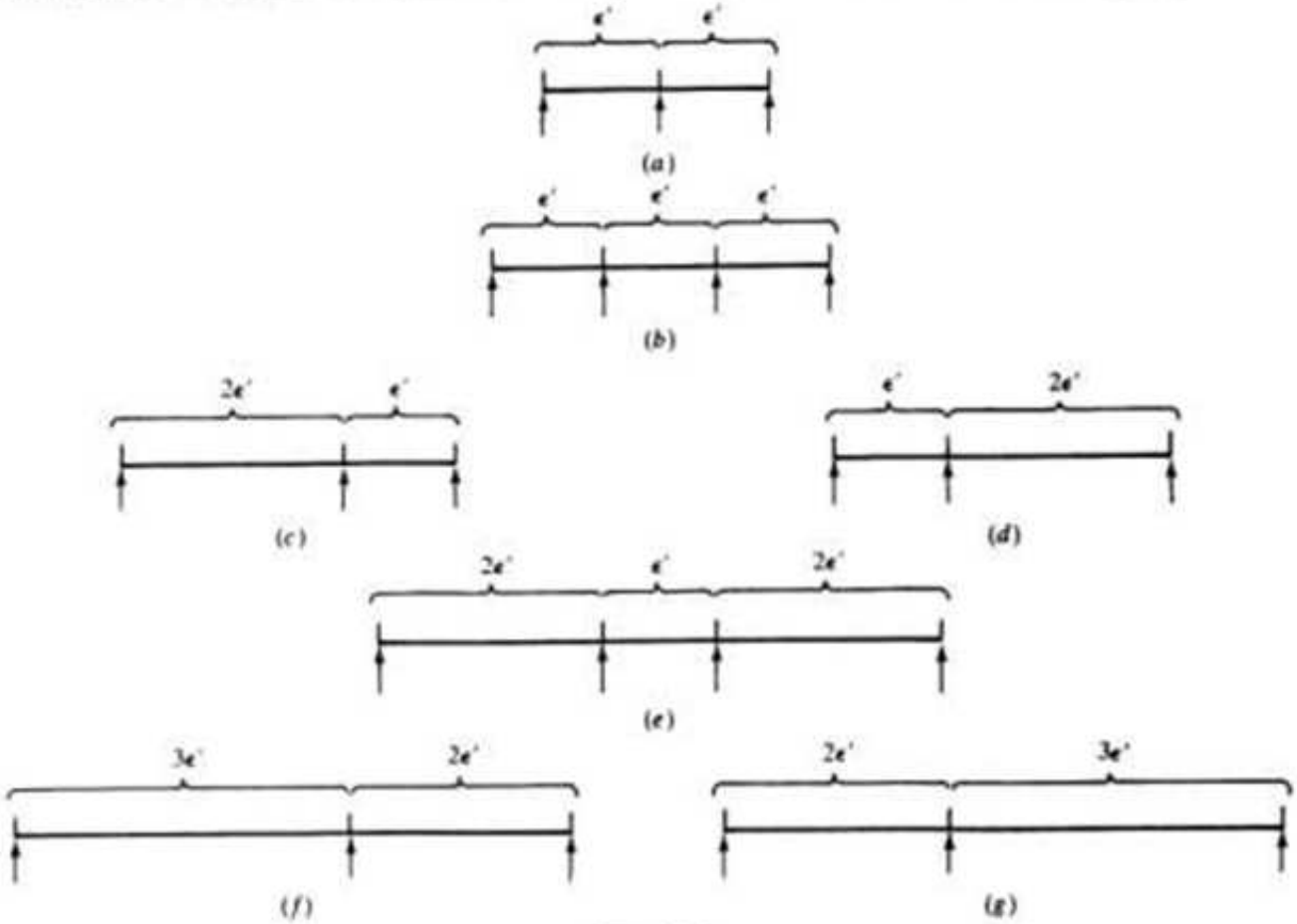

Fig. 10-7

10.12 Derive the Fibonacci search algorithm.

If the last interval under consideration, $\mathscr{I}_{N-1}$, is to be as large as possible yet contain an approximation to a local optimum good to within ϵ', then the search points used to generate this interval must be positioned as shown by the arrows in Fig. 10-7(*a*). The midpoint of this interval is the final approximation. Now, $\mathscr{I}_{N-1}$ is itself obtained from a larger interval, $\mathscr{I}_{N-2}$, by elimination of a portion of the larger interval, based on the unimodal property. To imply Fig. 10-7(*a*) *for an arbitrary unimodal function*, $\mathscr{I}_{N-2}$ must have the symmetrical form exhibited in Fig. 10-7(*b*), where again the arrows indicate the locations of search points or endpoints of the original interval. Either the left-hand one-third or the right-hand one-third of Fig. 10-7(*b*) is eliminated to yield Fig. 10-7(*a*). Figure 10-7(*b*), however, is itself the result of adding one search point. Before this point was added, $\mathscr{I}_{N-2}$ must have had the form of Fig. 10-7(*c*) or that of Fig. 10-7(*d*).

Either possibility for $\mathscr{I}_{N-2}$ is obtained from a larger interval, $\mathscr{I}_{N-3}$, by elimination of a portion of this larger interval, based on the unimodal property. To imply Fig. 10-7(*c*) or 10-7(*d*), $\mathscr{I}_{N-3}$ had to have the form exhibited in Fig. 10-7(*e*). Either the left-hand subinterval or the right-hand subinterval of Fig. 10-7(*e*) is eliminated to generate $\mathscr{I}_{N-2}$. Figure 10-7(*e*), however, is the result of adding one search point. Before this point was added, $\mathscr{I}_{N-3}$ must have had the form of Fig. 10-7(*f*) or that of Fig. 10-7(*g*).

Continuing in this manner and denoting the length of $\mathscr{I}_j$ by L_j, we find that $L_{N-1} = 2\epsilon'$, $L_{N-2} = 3\epsilon'$, $L_{N-3} = 5\epsilon'$, $L_{N-4} = 8\epsilon'$, $L_{N-5} = 13\epsilon'$, and so on. Since the coefficients are part of the Fibonacci sequence, we have

$$L_{N-1} = F_2\epsilon' \qquad L_{N-2} = F_3\epsilon' \qquad \cdots \qquad L_2 = F_{N-1}\epsilon' \qquad L_1 = F_N\epsilon' \tag{1}$$

But N is chosen such that $F_N\epsilon' = b - a$. Therefore, L_1 is the initial interval, and we have generated (in reverse order) the steps of the Fibonacci search.

10.13 Derive the golden-mean search algorithm.

From (*1*) of Problem 10.12, $L_1 = F_N\epsilon'$ and $L_2 = F_{N-1}\epsilon'$. Then, if N is large, Problem 10.26 gives

$$\frac{L_2}{L_1} = \frac{F_{N-1}}{F_N} \approx \lim_{N\to\infty} \frac{F_{N-1}}{F_N} = 0.6180\cdots$$

so that $L_2 \approx 0.6180L_1$. Identical reasoning shows that, provided N is large enough, the same approximation is valid for any two successive intervals in the Fibonacci search, i.e., $L_i \approx 0.6180L_{i-1}$, which is the defining equation for the golden-mean search.

Supplementary Problems

10.14 Find all local and global optima for $f(x) = x^3 - 6x^2 + 9x + 6$ on (*a*) $[0, 3]$, (*b*) $[1, 4]$, (*c*) $[-1, 5]$.

10.15 Find all local and global optima for $f(x) = x^4 - 4x^3 + 6x^2 - 4x + 1$ on (*a*) $[0, 3]$, (*b*) $[0, 2]$, (*c*) $[0, \infty)$.

10.16 Find all local and global optima for $f(x) = x + x^{-1}$ on (*a*) $(0, \infty)$, (*b*) $(-\infty, 0)$, (*c*) $[5, 10]$. (*Hint*: In parts (*a*) and (*b*), $x = 0$ is handled like an infinite endpoint.)

10.17 Show that $f(x) = x^3 - 6x^2 + 9x + 6$ is strictly concave on $(-\infty, 2)$ and strictly convex on $(2, \infty)$.

10.18 Determine intervals on which $f(x) = x + 4x^{-1}$ is concave or convex.

10.19 Use the three-point interval search to approximate to within $\epsilon = 0.1$ the location of the global minimum on $(0, 2]$ of the function of Problem 10.18. (*Hint*: Proceed as if the interval were $[0, 2]$.)

10.20 Approximate the location of the global maximum on $[0, \pi]$ of $f(x) = x^2 \sin x$, using a three-point search of the unrestricted interval with five functional evaluations (i.e., five search points). How good is this approximation?

10.21 Redo Problem 10.19 with a Fibonacci search.

10.22 Redo Problem 10.20 with a Fibonacci search. (*Hint*: A total of five search points requires that the first two be placed $F_5\epsilon'$ in from the endpoints of the original interval. Thus $N = 6$ for determining ϵ'.)

10.23 Redo Problem 10.19 with a golden-mean search.

10.24 Redo Problem 10.20 with a golden-mean search.

10.25 Show that the nth term of the Fibonacci sequence is

$$F_n = \frac{1}{\sqrt{5}}\left[\left(\frac{1+\sqrt{5}}{2}\right)^{n+1} - \left(\frac{1-\sqrt{5}}{2}\right)^{n+1}\right]$$

(*Hint*: Verify that the given expression satisfies the appropriate recursion relation and initial conditions.)

10.26 From Problem 10.25, derive

$$\lim_{N \to \infty} \frac{F_{N-1}}{F_N} = \left(\frac{1+\sqrt{5}}{2}\right)^{-1} = 0.6180\cdots$$

Chapter 11

Nonlinear Programming: Multivariable Optimization without Constraints

The present chapter will very largely consist in a generalization of the results of Chapter 10 to the case of more than one variable. However, only the analog to (*10.1*),

$$\text{optimize:} \quad z = f(\mathbf{X}) \qquad \text{where} \qquad \mathbf{X} \equiv [x_1, x_2, \ldots, x_n]^T \tag{11.1}$$

will be treated, and not the analog to (*10.2*). Moreover, we shall always suppose the optimization in (*11.1*) to be a maximization; all results will apply to a minimization program if $f(\mathbf{X})$ is replaced by $-f(\mathbf{X})$. See Problems 11.2 and 11.3.

LOCAL AND GLOBAL MAXIMA

Definition: An ϵ-neighborhood ($\epsilon > 0$) around $\hat{\mathbf{X}}$ is the set of all vectors $\mathbf{X}$ such that

$$(\mathbf{X} - \hat{\mathbf{X}})^T(\mathbf{X} - \hat{\mathbf{X}}) \equiv (x_1 - \hat{x}_1)^2 + (x_2 - \hat{x}_2)^2 + \cdots + (x_n - \hat{x}_n)^2 \leq \epsilon^2$$

In geometrical terms, an ϵ-neighborhood around $\hat{\mathbf{X}}$ is the interior and boundary of an n-dimensional sphere of radius ϵ centered at $\hat{\mathbf{X}}$.

An objective function $f(\mathbf{X})$ has a *local maximum* at $\hat{\mathbf{X}}$ if there exists an ϵ-neighborhood around $\hat{\mathbf{X}}$ such that $f(\mathbf{X}) \leq f(\hat{\mathbf{X}})$ for all $\mathbf{X}$ in this ϵ-neighborhood at which the function is defined. If the condition is met for every positive ϵ (no matter how large), then $f(\mathbf{X})$ has a *global maximum* at $\hat{\mathbf{X}}$.

GRADIENT VECTOR AND HESSIAN MATRIX

The *gradient vector* $\mathbf{V}f$ associated with a function $f(x_1, x_2, \ldots, x_n)$ having first partial derivatives is defined by

$$\mathbf{V}f \equiv \left[\frac{\partial f}{\partial x_1}, \frac{\partial f}{\partial x_2}, \ldots, \frac{\partial f}{\partial x_n}\right]^T$$

The notation $\mathbf{V}f|_{\hat{\mathbf{X}}}$ signifies the value of the gradient at $\hat{\mathbf{X}}$. For small displacements from $\hat{\mathbf{X}}$ in various directions, the direction of maximum increase in $f(\mathbf{X})$ is the direction of the vector $\mathbf{V}f|_{\hat{\mathbf{X}}}$. (See Problem 11.7.)

Example 11.1 For $f(x_1, x_2, x_3) = 3x_1^2x_2 - x_2^2x_3^3$, with $\hat{\mathbf{X}} = [1, 2, 3]^T$,

$$\mathbf{V}f = \begin{bmatrix} 6x_1x_2 \\ 3x_1^2 - 2x_2x_3^3 \\ -3x_2^2x_3^2 \end{bmatrix} \qquad \text{whence} \qquad \mathbf{V}f|_{\hat{\mathbf{X}}} = \begin{bmatrix} 6(1)(2) \\ 3(1)^2 - 2(2)(3)^3 \\ -3(2)^2(3)^2 \end{bmatrix} = \begin{bmatrix} 12 \\ -105 \\ -108 \end{bmatrix}$$

Therefore, at $[1, 2, 3]^T$, the function increases most rapidly in the direction of $[12, -105, -108]^T$.

The *Hessian matrix* associated with a function $f(x_1, x_2, \ldots, x_n)$ that has second partial derivatives is

$$\mathbf{H}_f \equiv \left[\frac{\partial^2 f}{\partial x_i \partial x_j}\right] \quad (i, j = 1, 2, \ldots, n)$$

The notation $\mathbf{H}_f|_{\hat{\mathbf{X}}}$ signifies the value of the Hessian matrix at $\hat{\mathbf{X}}$. In preparation for Theorems 11.4 and 11.5 below, we shall need the following:

Definition: An $n \times n$ symmetric matrix $\mathbf{A}$ (one such that $\mathbf{A} = \mathbf{A}^T$) is *negative definite* (*negative semi-definite*) if $\mathbf{X}^T\mathbf{A}\mathbf{X}$ is negative (nonpositive) for every n-dimensional vector $\mathbf{X} \neq \mathbf{0}$.

Theorem 11.1: Let $\mathbf{A} \equiv [a_{ij}]$ be an $n \times n$ symmetric matrix, and define the determinants

$$A_1 \equiv |a_{11}| \quad A_2 \equiv -\begin{vmatrix} a_{11} & a_{12} \\ a_{21} & a_{22} \end{vmatrix} \quad A_3 \equiv +\begin{vmatrix} a_{11} & a_{12} & a_{13} \\ a_{21} & a_{22} & a_{23} \\ a_{31} & a_{32} & a_{33} \end{vmatrix} \quad \cdots \quad A_n \equiv (-1)^{n-1} \det \mathbf{A}$$

Then $\mathbf{A}$ is negative definite if and only if $A_1, A_2, \ldots, A_n$ are all negative; $\mathbf{A}$ is negative semi-definite if and only if $A_1, A_2, \ldots, A_r$ $(r < n)$ are all negative and the remaining A's are all zero.

Example 11.2 For the function of Example 11.1,

$$\mathbf{H}_f = \begin{bmatrix} 6x_2 & 6x_1 & 0 \\ 6x_1 & -2x_3^3 & -6x_2x_3^2 \\ 0 & -6x_2x_3^2 & -6x_2^2x_3 \end{bmatrix} \qquad \text{whence} \qquad \mathbf{H}_f|_{\hat{\mathbf{X}}} = \begin{bmatrix} 12 & 6 & 0 \\ 6 & -54 & -108 \\ 0 & -108 & -72 \end{bmatrix}$$

For $\mathbf{H}_f|_{\hat{\mathbf{X}}}$, $A_1 = 12 > 0$, so that $\mathbf{H}_f$ is not negative definite, or even negative semi-definite, at $\hat{\mathbf{X}}$.

RESULTS FROM CALCULUS

Theorem 11.2: If $f(\mathbf{X})$ is continuous on a closed and bounded region, then $f(\mathbf{X})$ has a global maximum (and also a global minimum) on that region.

Theorem 11.3: If $f(\mathbf{X})$ has a local maximum (or a local minimum) at $\mathbf{X}^*$ and if ∇f exists on some ϵ-neighborhood around $\mathbf{X}^*$, then $\nabla f|_{\mathbf{X}^*} = \mathbf{0}$.

Theorem 11.4: If $f(\mathbf{X})$ has second partial derivatives on an ϵ-neighborhood around $\mathbf{X}^*$, and if $\nabla f|_{\mathbf{X}^*} = \mathbf{0}$ and $\mathbf{H}_f|_{\mathbf{X}^*}$ is negative definite, then $f(\mathbf{X})$ has a local maximum at $\mathbf{X}^*$.

It follows from Theorems 11.2 and 11.3 that a continuous $f(\mathbf{X})$ assumes its global maximum among those points at which ∇f does not exist or among those points at which $\nabla f = \mathbf{0}$ (*stationary points*)—unless the function assumes even larger values as $\mathbf{X}^T\mathbf{X} \to \infty$. In the latter case, no global maximum exists. (See Problem 11.1.)

Analytical solutions based on calculus are even harder to obtain for multivariable programs than for single-variable programs, and so, once again, numerical methods are used to approximate (local) maxima to within prescribed tolerances.

THE METHOD OF STEEPEST ASCENT

Choose an initial vector $\mathbf{X}_0$, making use of any prior information about where the desired global maximum might be found. Then determine vectors $\mathbf{X}_1, \mathbf{X}_2, \mathbf{X}_3, \ldots$ by the iterative relation

$$\mathbf{X}_{k+1} = \mathbf{X}_k + \lambda_k^* \nabla f|_{\mathbf{X}_k} \tag{11.2}$$

Here λ_k^* is a positive scalar which maximizes $f(\mathbf{X}_k + \lambda \nabla f|_{\mathbf{X}_k})$; this single-variable program is solved by the methods of Chapter 10. It is best if λ_k^* represents a global maximum; however, a local maximum will do. The iterative process terminates if and when the differences between the values of the objective function at two successive $\mathbf{X}$-vectors is smaller than a prescribed tolerance. The last-computed $\mathbf{X}$-vector becomes the final approximation to $\mathbf{X}^*$. (See Problems 11.4 and 11.5.)

THE NEWTON-RAPHSON METHOD

Choose an initial vector $\mathbf{X}_0$, as in the method of steepest ascent. Vectors $\mathbf{X}_1, \mathbf{X}_2, \mathbf{X}_3, \ldots$ then are determined iteratively by

$$\mathbf{X}_{k+1} = \mathbf{X}_k - (\mathbf{H}_f|_{\mathbf{X}_k})^{-1}\, \nabla f|_{\mathbf{X}_k} \tag{11.3}$$

The stopping rule is the same as for the method of steepest ascent. (See Problems 11.8 and 11.9.)

The Newton-Raphson method will converge to a local maximum if $\mathbf{H}_f$ is negative definite on some ϵ-neighborhood around the maximum and if $\mathbf{X}_0$ lies in that ϵ-neighborhood.

Remark 1: If $\mathbf{H}_f$ is negative definite, $\mathbf{H}_f^{-1}$ exists and is negative definite.

If $\mathbf{X}_0$ is not chosen correctly, the method may converge to a local *minimum* (see Problem 11.10) or it may not converge at all (see Problem 11.9). In either case, the iterative process is terminated and then begun anew with a better initial approximation.

THE FLETCHER-POWELL METHOD

This method, an eight-step algorithm, is begun by choosing an initial vector $\hat{\mathbf{X}}$ and prescribing a tolerance ϵ, and by setting an $n \times n$ matrix $\mathbf{G}$ equal to the identity matrix. Both $\hat{\mathbf{X}}$ and $\mathbf{G}$ are continually updated until successive values of the objective function differ by less than ϵ, whereupon the last value of $\hat{\mathbf{X}}$ is taken as $\mathbf{X}^*$.

STEP 1: Evaluate $\alpha = f(\hat{\mathbf{X}})$ and $B = \nabla f|_{\hat{\mathbf{X}}}$.

STEP 2: Determine λ^* such that $f(\hat{\mathbf{X}} + \lambda \mathbf{GB})$ is maximized when $\lambda = \lambda^*$. Set $\mathbf{D} = \lambda^* \mathbf{GB}$.

STEP 3: Designate $\hat{\mathbf{X}} + \mathbf{D}$ as the updated value of $\hat{\mathbf{X}}$.

STEP 4: Calculate $\beta = f(\hat{\mathbf{X}})$ for the updated values of $\hat{\mathbf{X}}$. If $\beta - \alpha < \epsilon$, go to Step 5; if not, go to Step 6.

STEP 5: Set $\mathbf{X}^* = \hat{\mathbf{X}}$, $f(\mathbf{X}^*) = \beta$, and stop.

STEP 6: Evaluate $\mathbf{C} = \nabla f|_{\hat{\mathbf{X}}}$ for the updated vector $\hat{\mathbf{X}}$, and set $\mathbf{Y} = \mathbf{B} - \mathbf{C}$.

STEP 7: Calculate the $n \times n$ matrices

$$\mathbf{L} = \left(\frac{1}{\mathbf{D}^T\mathbf{Y}}\right)\mathbf{D}\mathbf{D}^T \qquad \text{and} \qquad \mathbf{M} = \left(\frac{-1}{\mathbf{Y}^T\mathbf{G}\mathbf{Y}}\right)\mathbf{G}\mathbf{Y}\mathbf{Y}^T\mathbf{G}$$

STEP 8: Designate $\mathbf{G} + \mathbf{L} + \mathbf{M}$ as the updated value of $\mathbf{G}$. Set α equal to the current value of β, $\mathbf{B}$ equal to the current value of $\mathbf{C}$, and return to Step 2.

HOOKE-JEEVES' PATTERN SEARCH

This method is a direct-search algorithm that utilizes *exploratory moves*, which determine an appropriate direction, and *pattern moves*, which accelerate the search. The method is begun by choosing an initial vector, $\mathbf{B} \equiv [b_1, b_2, \ldots, b_n]^T$, and step size, h.

STEP 1: Exploratory moves around $\mathbf{B}$ are made by perturbing the components of $\mathbf{B}$, in sequence, by $\pm h$ units. If either perturbation improves (i.e., increases) the value of the objective function beyond the current value, the initial value being $f(\mathbf{B})$, the perturbed value of that component is retained; otherwise the original value of the component is kept. After each component has been tested in turn, the resulting vector is denoted by $\mathbf{C}$. If $\mathbf{C} = \mathbf{B}$, go to Step 2; otherwise go to Step 3.

STEP 2: $\mathbf{B}$ is the location of the maximum to within a tolerance of h. Either h is reduced and Step 1 repeated, or the search is terminated with $\mathbf{X}^* = \mathbf{B}$.

STEP 3: Make a pattern move to a temporary vector $\mathbf{T} = 2\mathbf{C} - \mathbf{B}$. ($\mathbf{T}$ is reached by moving from $\mathbf{B}$ to $\mathbf{C}$ and continuing for an equal distance in the same direction.)

Copyrighted Material

STEP 4: Make exploratory moves around **T** similar to the ones around **B** described in Step 1. Call the resulting vector **S**. If **S** = **T**, go to Step 5; otherwise go to Step 6.

STEP 5: Set **B** = **C** and return to Step 1.

STEP 6: Set **B** = **C**, **C** = **S**, and return to Step 3.

A MODIFIED PATTERN SEARCH

Hooke-Jeeves' pattern search terminates when no perturbation of any one component of **B** leads to an improvement in the objective function. Occasionally this termination is premature, in that perturbations of two or more of the components simultaneously may lead to an improvement in the objective function. Simultaneous perturbations can be included in the method by modifying Step 2 as follows:

STEP 2': Conduct an exhaustive search over the surface of the hypercube centered at **B** by considering all possible perturbations of the components of **B** by kh units, where $k = -1, 0, 1$. For a vector of n components, there are $3^n - 1$ perturbations to consider. As soon as an improvement is realized, terminate the exhaustive search, set the improved vector equal to **B**, and return to Step 1. If no improvement is realized, **B** is the location of the maximum to within a tolerance of h. Either h is reduced and Step 1 repeated, or the search is terminated with $\mathbf{X}^* = \mathbf{B}$.

CHOICE OF AN INITIAL APPROXIMATION

Each numerical method starts with a first approximation to the desired global maximum. At times, such an approximation is apparent from physical or geometrical aspects of the problem. (See Problem 11.12.) In other cases, a random number generator is used to provide different values for **X**. Then $f(\mathbf{X})$ is calculated for each randomly chosen **X**, and that **X** which yields the best value of the objective function is taken as the initial approximation. Even this random sampling procedure implies an initial guess of the location of the maximum, in that the random numbers must be normalized so as to lie in some fixed interval. (See Problem 11.4.)

CONCAVE FUNCTIONS

There is no guarantee that a numerical method will uncover a global maximum. It may converge to merely a local maximum or, worse yet, may not converge at all. Exceptions include programs having concave objective functions.

A function $f(\mathbf{X})$ is *convex* on a convex region $\mathscr{R}$ (see Chapter 2) if for any two vectors $\mathbf{X}_1$ and $\mathbf{X}_2$ in $\mathscr{R}$ and for all $0 \le \alpha \le 1$,

$$f(\alpha\mathbf{X}_1 + (1-\alpha)\mathbf{X}_2) \le \alpha f(\mathbf{X}_1) + (1-\alpha) f(\mathbf{X}_2) \tag{11.4}$$

[compare (*10.3*)]. A function is *concave* on $\mathscr{R}$ if and only if its negative is convex on $\mathscr{R}$. The convex region $\mathscr{R}$ may be finite or infinite.

Theorem 11.5: If $f(\mathbf{X})$ has second partial derivatives on $\mathscr{R}$, then $f(\mathbf{X})$ is concave on $\mathscr{R}$ if and only if its Hessian matrix $\mathbf{H}_f$ is negative semi-definite for all **X** in $\mathscr{R}$.

Theorem 11.6: If $f(\mathbf{X})$ is concave on $\mathscr{R}$, then any local maximum on $\mathscr{R}$ is a global maximum on $\mathscr{R}$.

These two theorems imply that, if $\mathbf{H}_f$ is negative semi-definite everywhere, then any local maximum yields a solution to program (*11.1*). If $\mathbf{H}_f$ is negative definite everywhere, then $f(\mathbf{X})$ is *strictly concave* (everywhere), and the solution to program (*11.1*) is unique.

Copyrighted Material

Copyrighted material

Solved Problems

11.1 Maximize: $z = x_1(x_2 - 1) + x_3(x_3^2 - 3)$.

Here $f(x_1, x_2, x_3) = x_1(x_2 - 1) + x_3(x_3^2 - 3)$. The gradient vector, $\nabla f = [x_2 - 1, x_1, 3x_3^2 - 3]^T$, exists everywhere and is zero only at

$$\mathbf{X}_1 = [0, 1, 1]^T \qquad \text{and} \qquad \mathbf{X}_2 = [0, 1, -1]^T$$

We have $f(\mathbf{X}_1) = -2$ and $f(\mathbf{X}_2) = 2$. But $f(x_1, x_2, x_3)$ becomes arbitrarily large as x_3 (for instance) does so; hence no global maximum exists. The vector $\mathbf{X}_2$ is not even the site of a local maximum; rather, it is a *saddle point*, as is $\mathbf{X}_1$.

11.2 Minimize: $z = (x_1 - \sqrt{5})^2 + (x_2 - \pi)^2 + 10$.

Multiplying this objective function by -1, we obtain the equivalent maximization program

$$\text{maximize:} \quad z = -(x_1 - \sqrt{5})^2 - (x_2 - \pi)^2 - 10$$

for which $\nabla z = -2[x_1 - \sqrt{5}, x_2 - \pi]^T$. Thus there is a single stationary point, $x_1 = \sqrt{5}$, $x_2 = \pi$, at which $z = -10$. Now, as $x_1^2 + x_2^2 \to \infty$, z becomes arbitrarily small; consequently, $z^* = -10$ is the global maximum, and $z^* = +10$ is the global minimum for the original minimization program. The minimum is, of course, also assumed as $x_1^* = \sqrt{5} \approx 2.2361$, $x_2^* = \pi \approx 3.1416$.

11.3 Minimize: $z = \sin x_1 x_2 - \cos(x_1 - x_2)$.

Multiplying the objective function by -1, we obtain the equivalent maximization program

$$\text{maximize:} \quad z = -\sin x_1 x_2 + \cos(x_1 - x_2)$$

Here $f(x_1, x_2) = -\sin x_1 x_2 + \cos(x_1 - x_2)$ and

$$\nabla f = \begin{bmatrix} -x_2 \cos x_1 x_2 - \sin(x_1 - x_2) \\ -x_1 \cos x_1 x_2 + \sin(x_1 - x_2) \end{bmatrix}$$

which exists everywhere. Stationary points therefore satisfy

$$\begin{aligned} -x_2 \cos x_1 x_2 - \sin(x_1 - x_2) &= 0 \\ -x_1 \cos x_1 x_2 + \sin(x_1 - x_2) &= 0 \end{aligned} \tag{1}$$

Although a *complete* solution to system (1) cannot be obtained algebraically, it is possible to find a partial solution that suffices for the present program. Observe first of all that, for all x_1 and x_2,

$$|f(x_1, x_2)| \le |\sin x_1 x_2| + |\cos(x_1 - x_2)| \le 1 + 1 = 2$$

Hence, if a stationary point can be found at which $f(x_1, x_2) = 2$, that point is necessarily the site of a global maximum. Now, it is clear that (1) will be satisfied if $\cos x_1 x_2$ and $\sin(x_1 - x_2)$ separately vanish, i.e., if

$$x_1 x_2 = \left(k + \frac{1}{2}\right)\pi \qquad \text{and} \qquad x_1 - x_2 = n\pi$$

where k and n are integers. Trying $k = 1$ and $n = 0$, we find that

$$f\left(\sqrt{\frac{3\pi}{2}}, \sqrt{\frac{3\pi}{2}}\right) = -\sin\frac{3\pi}{2} + \cos 0 = 2$$

and our search is over. The original minimization program then has the solution $z^* = -2$, attained at $x_1^* = x_2^* = \sqrt{3\pi/2}$ (and elsewhere).

11.4 Use the method of steepest ascent to

$$\text{minimize:} \quad z = (x_1 - \sqrt{5})^2 + (x_2 - \pi)^2 + 10$$

Going over to the equivalent program

$$\text{maximize:} \quad z = -(x_1 - \sqrt{5})^2 - (x_2 - \pi)^2 - 10 \qquad (I)$$

we require a starting program solution, which we obtain by a random sampling of the objective function over the region $-10 \le x_1, x_2 \le 10$. The sample points and corresponding z-values are shown in the table below. The maximum z-entry is -36.58, occurring at $\mathbf{X}_0 = [6.597, 5.891]^T$, which we take as the initial approximation to $\mathbf{X}^*$. The gradient of the objective function for program (I) is

$$\nabla f = \begin{bmatrix} -2(x_1 - \sqrt{5}) \\ -2(x_2 - \pi) \end{bmatrix}$$

x_1	−8.537	−0.9198	9.201	9.250	6.597	8.411	8.202	−9.173	−9.337	−5.794
x_2	−1.099	−8.005	−2.524	7.546	5.891	−9.945	−5.709	−6.914	8.163	−0.0210
z	−144.0	−144.2	−90.61	−78.59	−36.58	−219.4	−123.9	−241.3	−169.2	−84.48

First iteration.

$$\mathbf{X}_0 + \lambda \nabla f|_{\mathbf{X}_0} = \begin{bmatrix} 6.597 \\ 5.891 \end{bmatrix} + \lambda \begin{bmatrix} -2(6.597 - \sqrt{5}) \\ -2(5.891 - \pi) \end{bmatrix} = \begin{bmatrix} 6.597 - 8.722\lambda \\ 5.891 - 5.499\lambda \end{bmatrix}$$

$$f(\mathbf{X}_0 + \lambda \nabla f|_{\mathbf{X}_0}) = -(6.597 - 8.722\lambda - \sqrt{5})^2 - (5.891 - 5.499\lambda - \pi)^2 - 10$$
$$= -106.3\lambda^2 + 106.3\lambda - 36.58$$

Using the analytical methods described in Chapter 10, we determine that this function of λ assumes a (global) maximum at $\lambda_0^* = 0.5$. Thus,

$$\mathbf{X}_1 = \mathbf{X}_0 + \lambda_0^* \nabla f|_{\mathbf{X}_0} = \begin{bmatrix} 6.597 - 8.722(0.5) \\ 5.891 - 5.499(0.5) \end{bmatrix} = \begin{bmatrix} 2.236 \\ 3.142 \end{bmatrix}$$

with $f(\mathbf{X}_1) = -10.00$. Since the difference between $f(\mathbf{X}_0) = -36.58$ and $f(\mathbf{X}_1) = -10.00$ is significant, we continue iterating.

Second iteration.

$$\mathbf{X}_1 + \lambda \nabla f|_{\mathbf{X}_1} = \begin{bmatrix} 2.236 \\ 3.142 \end{bmatrix} + \lambda \begin{bmatrix} -2(2.236 - \sqrt{5}) \\ -2(3.142 - \pi) \end{bmatrix} = \begin{bmatrix} 2.236 + 0.0001\lambda \\ 3.142 - 0.0008\lambda \end{bmatrix}$$

$$f(\mathbf{X}_1 + \lambda \nabla f|_{\mathbf{X}_1}) = -(2.236 + 0.0001\lambda - \sqrt{5})^2 - (3.142 - 0.0008\lambda - \pi)^2 - 10$$
$$= -(6.500\lambda^2 - 6.382\lambda + 10^8)10^{-7}$$

Using the analytical methods described in Chapter 10, we find that this function of λ has a (global) maximum at $\lambda_1^* = 0.4909$. Thus,

$$\mathbf{X}_2 = \mathbf{X}_1 + \lambda_1^* \nabla f|_{\mathbf{X}_1} = \begin{bmatrix} 2.236 + 0.0001(0.4909) \\ 3.142 - 0.0008(0.4909) \end{bmatrix} = \begin{bmatrix} 2.236 \\ 3.142 \end{bmatrix}$$

Since $\mathbf{X}_1 = \mathbf{X}_2$ (to four significant figures), we accept $\mathbf{X}^* = [2.236, 3.142]^T$, with $z^* = -10.00$, as the solution to program (I). The solution to the original minimization program is then $\mathbf{X}^* = [2.236, 3.142]^T$, with $z^* = +10.00$. Compare this with the results obtained in Problem 11.2.

11.5 Use the method of steepest ascent to

$$\text{maximize:} \quad z = -\sin x_1 x_2 + \cos(x_1 - x_2)$$

to within a tolerance of 0.05.

Here

$$\nabla f = \begin{bmatrix} -x_2 \cos x_1 x_2 - \sin(x_1 - x_2) \\ -x_1 \cos x_1 x_2 + \sin(x_1 - x_2) \end{bmatrix}$$

From a random number search of the region $-1 \le x_1, x_2 \le 1$, we get $\mathbf{X}_0 = [-0.7548, 0.5303]^T$, with $f(\mathbf{X}_0) = 0.6715$.

First iteration.

$$\nabla f|_{\mathbf{X}_0} = \begin{bmatrix} -0.5303 \cos[(-0.7548)(0.5303)] - \sin(-0.7548 - 0.5303) \\ 0.7548 \cos[(-0.7548)(0.5303)] + \sin(-0.7548 - 0.5303) \end{bmatrix} = \begin{bmatrix} 0.4711 \\ -0.2643 \end{bmatrix}$$

$$\mathbf{X}_0 + \lambda \nabla f|_{\mathbf{X}_0} = \begin{bmatrix} -0.7548 \\ 0.5303 \end{bmatrix} + \lambda \begin{bmatrix} 0.4711 \\ -0.2643 \end{bmatrix} = \begin{bmatrix} -0.7548 + 0.4711\lambda \\ 0.5303 - 0.2643\lambda \end{bmatrix}$$

$$\begin{aligned} f(\mathbf{X}_0 + \lambda \nabla f|_{\mathbf{X}_0}) &= -\sin[(-0.7548 + 0.4711\lambda)(0.5303 - 0.2643\lambda)] \\ &\quad + \cos[(-0.7548 + 0.4711\lambda) - (0.5303 - 0.2643\lambda)] \\ &= -\sin(-0.4003 + 0.4493\lambda - 0.1245\lambda^2) + \cos(-1.285 + 0.7354\lambda) \end{aligned}$$

Using the golden-mean search on [0, 8], we determine that this function of λ has a maximum at $\lambda_0^* \approx 1.7$. Thus,

$$\mathbf{X}_1 = \mathbf{X}_0 + \lambda_0^* \nabla f|_{\mathbf{X}_0} = \begin{bmatrix} -0.7548 + 0.4711(1.7) \\ 0.5303 - 0.2643(1.7) \end{bmatrix} = \begin{bmatrix} 0.04607 \\ 0.08099 \end{bmatrix}$$

with $f(\mathbf{X}_1) = 0.9957$. Since

$$f(\mathbf{X}_1) - f(\mathbf{X}_0) = 0.9957 - 0.6715 = 0.3242 > 0.05$$

we continue iterating.

Second iteration.

$$\begin{aligned} \nabla f|_{\mathbf{X}_1} &= \begin{bmatrix} -0.08099 \cos[(0.04607)(0.08099)] - \sin(0.04607 - 0.08099) \\ -0.04607 \cos[(0.04607)(0.08099)] + \sin(0.04607 - 0.08099) \end{bmatrix} \\ &= \begin{bmatrix} -0.04608 \\ -0.08098 \end{bmatrix} \end{aligned}$$

$$\mathbf{X}_1 + \lambda \nabla f|_{\mathbf{X}_1} = \begin{bmatrix} 0.04607 - 0.04608\lambda \\ 0.08099 - 0.08098\lambda \end{bmatrix}$$

$$\begin{aligned} f(\mathbf{X}_1 + \lambda \nabla f|_{\mathbf{X}_1}) &= -\sin[(0.04607 - 0.04608\lambda)(0.08099 - 0.08098\lambda)] \\ &\quad + \cos[(0.04607 - 0.04608\lambda) - (0.08099 - 0.08098\lambda)] \\ &= -\sin(0.003731 - 0.007463\lambda + 0.003732\lambda^2) + \cos(-0.03492 + 0.03490\lambda) \end{aligned}$$

Using the golden-mean search on [0, 8], we determine that this function of λ has a maximum at $\lambda_1^* \approx 1$. Thus,

$$\mathbf{X}_2 = \mathbf{X}_1 + \lambda_1^* \nabla f|_{\mathbf{X}_1} = \begin{bmatrix} 0.04607 - 0.04608(1) \\ 0.08099 - 0.08098(1) \end{bmatrix} = \begin{bmatrix} 0.0000 \\ 0.0000 \end{bmatrix}$$

with $f(\mathbf{X}_2) = 1.000$. Since

$$f(\mathbf{X}_2) - f(\mathbf{X}_1) = 1.000 - 0.9957 = 0.0043 < 0.05$$

we take $\mathbf{X}^* = \mathbf{X}_2$ and $z^* = 1.000$.

11.6 Is the maximum found in Problem 11.5 a global maximum?

For the objective function $f(x_1, x_2) = -\sin x_1 x_2 + \cos(x_1 - x_2)$, the Hessian matrix is *not* negative semi-definite everywhere. Indeed,

$$\frac{\partial^2 f}{\partial x_1^2} = x_2^2 \sin x_1 x_2 - \cos(x_1 - x_2)$$

and the right-hand side is positive for $x_1 = x_2 = \sqrt{\pi/2}$. Thus $f(x_1, x_2)$ is not concave everywhere, and the question remains open. Referring to Problem 11.3, we see that the global maximum actually is $z^* = 2$, so that $z^* = 1.000$ must be only a local maximum.

11.7 Derive the method of steepest ascent.

For any fixed vector $\hat{\mathbf{X}}$ and any unit vector $\mathbf{U}$, the *directional derivative*,

$$D_{\mathbf{U}} f(\hat{\mathbf{X}}) \equiv \nabla f|_{\hat{\mathbf{X}}} \cdot \mathbf{U}$$

gives the rate of change of $f(\mathbf{X})$ at $\hat{\mathbf{X}}$ in the direction of $\mathbf{U}$. Since

$$\nabla f \cdot \mathbf{U} = |\nabla f||\mathbf{U}| \cos\theta = |\nabla f| \cos\theta$$

the greatest *increase* in $f(\mathbf{X})$ occurs when $\theta = 0$, i.e., when $\mathbf{U}$ is in the same direction as ∇f. Therefore, any (small) movement from $\hat{\mathbf{X}}$ in the direction of $\nabla f|_{\hat{\mathbf{X}}}$ will, initially, increase the function over $f(\hat{\mathbf{X}})$ as rapidly as possible. The vector $\lambda \nabla f|_{\hat{\mathbf{X}}}$ represents a displacement of this kind. The best value of λ is the one that maximizes $f(\hat{\mathbf{X}} + \lambda \nabla f|_{\hat{\mathbf{X}}})$, the value of the function after the displacement.

11.8 Use the Newton-Raphson method to

$$\text{maximize:} \quad z = -(x_1 - \sqrt{5})^2 - (x_2 - \pi)^2 - 10$$

to within a tolerance of 0.05.

From Problem 11.4 we take the initial approximation $\mathbf{X}_0 = [6.597, 5.891]^T$, with $f(\mathbf{X}_0) = -36.58$. The gradient vector, Hessian matrix, and inverse Hessian matrix for this objective function are, respectively,

$$\nabla f = \begin{bmatrix} -2(x_1 - \sqrt{5}) \\ -2(x_2 - \pi) \end{bmatrix} \qquad \mathbf{H}_f = \begin{bmatrix} -2 & 0 \\ 0 & -2 \end{bmatrix} \qquad \mathbf{H}_f^{-1} = \begin{bmatrix} -0.5 & 0 \\ 0 & -0.5 \end{bmatrix}$$

for all x_1 and x_2.

First iteration.

$$\nabla f|_{\mathbf{X}_0} = \begin{bmatrix} -2(6.597 - \sqrt{5}) \\ -2(5.891 - \pi) \end{bmatrix} = \begin{bmatrix} -8.722 \\ -5.499 \end{bmatrix}$$

$$\begin{aligned} \mathbf{X}_1 &= \mathbf{X}_0 - (\mathbf{H}_f|_{\mathbf{X}_0})^{-1} \nabla f|_{\mathbf{X}_0} \\ &= \begin{bmatrix} 6.597 \\ 5.891 \end{bmatrix} - \begin{bmatrix} -0.5 & 0 \\ 0 & -0.5 \end{bmatrix} \begin{bmatrix} -8.722 \\ -5.499 \end{bmatrix} = \begin{bmatrix} 2.236 \\ 3.142 \end{bmatrix} \end{aligned}$$

with $f(\mathbf{X}_1) = -10.00$. Since

$$f(\mathbf{X}_1) - f(\mathbf{X}_0) = -10.00 - (-36.58) = 26.58 > 0.05$$

we continue iterating.

Second iteration.

$$\nabla f|_{\mathbf{X}_1} = \begin{bmatrix} -2(2.236 - \sqrt{5}) \\ -2(3.142 - \pi) \end{bmatrix} = \begin{bmatrix} -0.0001 \\ 0.0008 \end{bmatrix}$$

$$\begin{aligned} \mathbf{X}_2 &= \mathbf{X}_1 - (\mathbf{H}_f|_{\mathbf{X}_1})^{-1} \nabla f|_{\mathbf{X}_1} \\ &= \begin{bmatrix} 2.236 \\ 3.142 \end{bmatrix} - \begin{bmatrix} -0.5 & 0 \\ 0 & -0.5 \end{bmatrix} \begin{bmatrix} -0.0001 \\ 0.0008 \end{bmatrix} = \begin{bmatrix} 2.236 \\ 3.142 \end{bmatrix} \end{aligned}$$

with $f(\mathbf{X}_2) = -10.00$. Since $f(\mathbf{X}_2) - f(\mathbf{X}_1) = 0 < 0.05$, we take $\mathbf{X}^* = \mathbf{X}_2 = [2.236, 3.142]^T$, with $z^* = f(\mathbf{X}_2) = -10.00$.

11.9 Use the Newton-Raphson method to

$$\text{maximize:} \quad z = -\sin x_1 x_2 + \cos(x_1 - x_2)$$

to within a tolerance of 0.05.

The gradient vector and Hessian matrix for this objective function are

$$\nabla f = \begin{bmatrix} -x_2 \cos x_1 x_2 - \sin(x_1 - x_2) \\ -x_1 \cos x_1 x_2 + \sin(x_1 - x_2) \end{bmatrix} \tag{1}$$

$$\mathbf{H}_f = \begin{bmatrix} x_2^2 \sin x_1 x_2 - \cos(x_1 - x_2) & -\cos x_1 x_2 + x_1 x_2 \sin x_1 x_2 + \cos(x_1 - x_2) \\ -\cos x_1 x_2 + x_1 x_2 \sin x_1 x_2 + \cos(x_1 - x_2) & x_1^2 \sin x_1 x_2 - \cos(x_1 - x_2) \end{bmatrix} \tag{2}$$

From Problem 11.5 we appropriate the initial approximation $\mathbf{X}_0 = [-0.7548, 0.5303]^T$.

First iteration. Substituting the components of $\mathbf{X}_0$ into (1) and (2), we obtain

$$\nabla f|_{\mathbf{X}_0} = \begin{bmatrix} 0.4711 \\ -0.2643 \end{bmatrix} \qquad \mathbf{H}_f|_{\mathbf{X}_0} = \begin{bmatrix} -0.3914 & -0.4832 \\ -0.4832 & -0.5038 \end{bmatrix} \qquad (\mathbf{H}_f|_{\mathbf{X}_0})^{-1} = \begin{bmatrix} 13.88 & -13.31 \\ -13.31 & 10.78 \end{bmatrix}$$

Then

$$\begin{aligned} \mathbf{X}_1 &= \mathbf{X}_0 - (\mathbf{H}_f|_{\mathbf{X}_0})^{-1} \nabla f|_{\mathbf{X}_0} \\ &= \begin{bmatrix} -0.7548 \\ 0.5303 \end{bmatrix} - \begin{bmatrix} 13.88 & -13.31 \\ -13.31 & 10.78 \end{bmatrix} \begin{bmatrix} 0.4711 \\ -0.2643 \end{bmatrix} = \begin{bmatrix} -10.81 \\ 9.650 \end{bmatrix} \end{aligned}$$

Observe that $\mathbf{X}_1$ is not close to $\mathbf{X}_0$, which suggests that the numerical scheme is not converging. In this case, Theorem 11.1 shows that $\mathbf{H}_f|_{\mathbf{X}_0}$ is not negative definite; hence $\mathbf{X}_0$ was not chosen sufficiently close to a maximum to guarantee convergence of the Newton-Raphson method. Therefore, rather than continuing to iterate, it is wiser to begin the method anew with a better approximation to a maximum.

An improved initial approximation can be obtained in two ways. First, we could use a random number generator to provide additional values for $\mathbf{X}$ until a better approximation is found. Second, we could use the method of steepest ascent for one iteration with the current $\mathbf{X}_0$, and then use the resulting vector to start the Newton-Raphson method. Adopting the second approach, we obtain from Problem 11.5 the improved starting vector

$$\mathbf{X}_0 = \begin{bmatrix} 0.046\,07 \\ 0.080\,99 \end{bmatrix} \qquad \text{with} \qquad f(\mathbf{X}_0) = 0.9957$$

(New) first iteration. Substituting $x_1 = 0.046\,07$ and $x_2 = 0.080\,99$ into (1) and (2), we obtain

$$\nabla f|_{\mathbf{X}_0} = \begin{bmatrix} -0.046\,08 \\ -0.080\,98 \end{bmatrix} \quad \mathbf{H}_f|_{\mathbf{X}_0} = \begin{bmatrix} -0.9994 & -0.000\,588\,8 \\ -0.000\,588\,8 & -0.9994 \end{bmatrix} \quad (\mathbf{H}_f|_{\mathbf{X}_0})^{-1} = \begin{bmatrix} -1.001 & 0.000\,589\,5 \\ 0.000\,589\,5 & -1.001 \end{bmatrix}$$

Then

$$\begin{aligned} \mathbf{X}_1 &= \mathbf{X}_0 - (\mathbf{H}_f|_{\mathbf{X}_0})^{-1} \nabla f|_{\mathbf{X}_0} \\ &= \begin{bmatrix} 0.046\,07 \\ 0.080\,99 \end{bmatrix} - \begin{bmatrix} -1.001 & 0.000\,589\,5 \\ 0.000\,589\,5 & -1.001 \end{bmatrix} \begin{bmatrix} -0.046\,08 \\ -0.080\,98 \end{bmatrix} = \begin{bmatrix} 0 \\ 0 \end{bmatrix} \end{aligned}$$

With $f(\mathbf{X}_1) = 1$. Since

$$f(\mathbf{X}_1) - f(\mathbf{X}_0) = 1.0000 - 0.9957 = 0.0043 < 0.05$$

we take $\mathbf{X}^* = \mathbf{X}_1 = [0, 0]^T$ and $z^* = f(\mathbf{X}_1) = 1$.

11.10 Use the Newton-Raphson method to

$$\text{maximize:} \quad z = -\sin x_1 x_2 + \cos(x_1 - x_2)$$

to within a tolerance of 0.05, starting with $\mathbf{X}_0 = [4.8, 1.6]^T$.

The gradient vector and Hessian matrix for this objective function are given by (*1*) and (*2*) of Problem 11.9.

First iteration.

$$\nabla f|_{\mathbf{X}_0} = \begin{bmatrix} -1.6\cos[(4.8)(1.6)] - \sin(4.8-1.6) \\ -4.8\cos[(4.8)(1.6)] + \sin(4.8-1.6) \end{bmatrix} = \begin{bmatrix} -0.2186 \\ -0.8893 \end{bmatrix}$$

$$\mathbf{H}_f|_{\mathbf{X}_0} = \begin{bmatrix} 3.520 & 6.393 \\ 6.393 & 23.68 \end{bmatrix} \qquad (\mathbf{H}_f|_{\mathbf{X}_0})^{-1} = \begin{bmatrix} 0.5572 & -0.1504 \\ -0.1504 & 0.082\,79 \end{bmatrix}$$

Then

$$\mathbf{X}_1 = \mathbf{X}_0 - (\mathbf{H}_f|_{\mathbf{X}_0})^{-1}\nabla f|_{\mathbf{X}_0}$$

$$= \begin{bmatrix} 4.8 \\ 1.6 \end{bmatrix} - \begin{bmatrix} 0.5572 & -0.1504 \\ -0.1504 & 0.082\,79 \end{bmatrix}\begin{bmatrix} -0.2186 \\ -0.8893 \end{bmatrix} = \begin{bmatrix} 4.788 \\ 1.641 \end{bmatrix}$$

with $f(\mathbf{X}_1) = -2.000$. Now, $f(\mathbf{X}_0) = -1.983$; so even though $\mathbf{X}_1$ is close to $\mathbf{X}_0$, we have

$$f(\mathbf{X}_1) < f(\mathbf{X}_0)$$

and the iterations are tending toward a minimum rather than a maximum. (Notice that $\mathbf{H}_f|_{\mathbf{X}_0}$ is not negative definite; in fact, it is *positive definite*.) A different value for $\mathbf{X}_0$ must be used, similar to the one determined in Problem 11.5, if the Newton-Raphson method is to succeed.

11.11 Solve Problem 1.14 to within 0.25 km by the Fletcher-Powell method.

Problem 1.14 is equivalent to a maximization program with objective function

$$f(\mathbf{X}) = -\sqrt{x_1^2 + x_2^2} - \sqrt{(x_1-300)^2 + (x_2-400)^2} - \sqrt{(x_1-700)^2 + (x_2-300)^2} \qquad (1)$$

and gradient vector

$$\nabla f = \begin{bmatrix} -\dfrac{x_1}{\sqrt{x_1^2+x_2^2}} - \dfrac{x_1-300}{\sqrt{(x_1-300)^2+(x_2-400)^2}} - \dfrac{x_1-700}{\sqrt{(x_1-700)^2+(x_2-300)^2}} \\ -\dfrac{x_2}{\sqrt{x_1^2+x_2^2}} - \dfrac{x_2-400}{\sqrt{(x_1-300)^2+(x_2-400)^2}} - \dfrac{x_2-300}{\sqrt{(x_1-700)^2+(x_2-300)^2}} \end{bmatrix} \qquad (2)$$

To initialize the Fletcher-Powell method, we set $\epsilon = 0.25$ and

$$\mathbf{G} = \begin{bmatrix} 1 & 0 \\ 0 & 1 \end{bmatrix}$$

and choose $\hat{\mathbf{X}} = [400, 200]^T$, which from Fig. 1-4 appears to be a good approximation to the optimal location of the refinery.

STEP 1:

$$\alpha = f(\hat{\mathbf{X}}) = f(400, 200)$$

$$= -\sqrt{(400)^2 + (200)^2} - \sqrt{(100)^2 + (-200)^2} - \sqrt{(-300)^2 + (-100)^2} = -987.05$$

$$\mathbf{B} = \nabla f|_{\hat{\mathbf{X}}} = \begin{bmatrix} -0.392\,96 \\ 0.763\,44 \end{bmatrix}$$

STEP 2:

$$f(\hat{\mathbf{X}} + \lambda\mathbf{G}\mathbf{B}) = f\left(\begin{bmatrix} 400 \\ 200 \end{bmatrix} + \lambda\begin{bmatrix} 1 & 0 \\ 0 & 1 \end{bmatrix}\begin{bmatrix} -0.392\,96 \\ 0.763\,44 \end{bmatrix}\right) = f\left(\begin{bmatrix} 400 - 0.392\,96\lambda \\ 200 + 0.763\,44\lambda \end{bmatrix}\right)$$

$$= -\sqrt{(400 - 0.392\,96\lambda)^2 + (200 + 0.763\,44\lambda)^2}$$

$$-\sqrt{(100 - 0.392\,96\lambda)^2 + (-200 + 0.763\,44\lambda)^2}$$

$$-\sqrt{(-300 - 0.392\,96\lambda)^2 + (-100 + 0.763\,44\lambda)^2}$$

Making a three-point interval search of [0, 425], we determine $\lambda^* \approx 212.5$. Therefore,

$$\mathbf{D} = \lambda^*\mathbf{GB} = (212.5)\begin{bmatrix} 1 & 0 \\ 0 & 1 \end{bmatrix}\begin{bmatrix} -0.392\,96 \\ 0.763\,44 \end{bmatrix} = \begin{bmatrix} -83.504 \\ 162.23 \end{bmatrix}$$

STEP 3:

$$\hat{\mathbf{X}} + \mathbf{D} = \begin{bmatrix} 400 \\ 200 \end{bmatrix} + \begin{bmatrix} -83.504 \\ 162.23 \end{bmatrix} = \begin{bmatrix} 316.50 \\ 362.23 \end{bmatrix}$$

which we take as the updated $\hat{\mathbf{X}}$: $\hat{\mathbf{X}} = [316.50, 362.23]^T$.

STEP 4:

$$\beta = f(\hat{\mathbf{X}}) = f(316.50, 362.23) = -910.76$$
$$\beta - \alpha = -910.76 - (-987.05) = 76.29 > 0.25$$

STEP 6:

$$\mathbf{C} = \nabla f|_{\hat{\mathbf{X}}} = \begin{bmatrix} -0.071\,207 \\ 0.003\,159\,4 \end{bmatrix} \qquad \mathbf{Y} = \mathbf{B} - \mathbf{C} = \begin{bmatrix} -0.392\,96 \\ 0.763\,44 \end{bmatrix} - \begin{bmatrix} -0.071\,207 \\ 0.003\,159\,4 \end{bmatrix} = \begin{bmatrix} -0.321\,75 \\ 0.760\,28 \end{bmatrix}$$

STEP 7:

$$\mathbf{D}^T\mathbf{Y} = [-83.504, 162.23]\begin{bmatrix} -0.321\,75 \\ 0.760\,28 \end{bmatrix} = 150.21$$

$$\mathbf{L} = \frac{1}{150.21}\mathbf{D}\mathbf{D}^T = \frac{1}{150.21}\begin{bmatrix} -83.504 \\ 162.23 \end{bmatrix}[-83.504, 162.23]$$

$$= \frac{1}{150.21}\begin{bmatrix} 6972.9 & -13.547 \\ -13.547 & 26.319 \end{bmatrix} = \begin{bmatrix} 46.421 & -90.187 \\ -90.187 & 172.21 \end{bmatrix}$$

$$\mathbf{Y}^T\mathbf{G}\mathbf{Y} = [-0.321\,75, 0.760\,28]\begin{bmatrix} 1 & 0 \\ 0 & 1 \end{bmatrix}\begin{bmatrix} -0.321\,75 \\ 0.760\,28 \end{bmatrix} = 0.681\,55$$

$$\mathbf{M} = \frac{-1}{0.681\,55}\mathbf{G}\mathbf{Y}\mathbf{Y}^T\mathbf{G}$$

$$= \frac{-1}{0.681\,55}\begin{bmatrix} 1 & 0 \\ 0 & 1 \end{bmatrix}\begin{bmatrix} -0.321\,75 \\ 0.760\,28 \end{bmatrix}[-0.321\,75, 0.760\,28]\begin{bmatrix} 1 & 0 \\ 0 & 1 \end{bmatrix}$$

$$= \frac{-1}{0.681\,55}\begin{bmatrix} 0.103\,52 & -0.244\,62 \\ -0.244\,62 & 0.578\,03 \end{bmatrix} = \begin{bmatrix} -0.151\,89 & 0.358\,92 \\ 0.358\,92 & -0.848\,11 \end{bmatrix}$$

STEP 8:

$$\mathbf{G} + \mathbf{L} + \mathbf{M} = \begin{bmatrix} 1 & 0 \\ 0 & 1 \end{bmatrix} + \begin{bmatrix} 46.421 & -90.187 \\ -90.187 & 175.21 \end{bmatrix} + \begin{bmatrix} -0.151\,89 & 0.358\,92 \\ 0.358\,92 & -0.848\,11 \end{bmatrix} = \begin{bmatrix} 47.269 & -89.828 \\ -89.828 & 175.36 \end{bmatrix}$$

which we take as the updated $\mathbf{G}$. We also update $\alpha = -910.76$ and

$$\mathbf{B} = \begin{bmatrix} -0.071\,207 \\ 0.003\,159\,4 \end{bmatrix}$$

STEP 2:

$$f(\hat{\mathbf{X}} + \lambda\mathbf{GB}) = f\left(\begin{bmatrix} 316.50 \\ 362.23 \end{bmatrix} + \lambda\begin{bmatrix} 47.269 & -89.828 \\ -89.828 & 175.36 \end{bmatrix}\begin{bmatrix} -0.071\,207 \\ 0.003\,159\,4 \end{bmatrix}\right)$$

$$= f\left(\begin{bmatrix} 316.50 - 3.64497\lambda \\ 362.23 + 6.9504\lambda \end{bmatrix}\right)$$

$$= -\sqrt{(316.50 - 3.64497\lambda)^2 + (362.23 + 6.9504\lambda)^2}$$

$$-\sqrt{(16.50 - 3.64497\lambda)^2 + (-37.77 + 6.9504\lambda)^2}$$

$$-\sqrt{(-383.50 - 3.64497\lambda)^2 + (62.23 + 6.9504\lambda)^2}$$

Making a three-point interval search of [0, 10], we determine $\lambda^* \approx 1.25$. Therefore,

$$\mathbf{D} = \lambda^* \mathbf{G}\mathbf{B} = (1.25)\begin{bmatrix} 47.269 & -89.828 \\ -89.828 & 175.36 \end{bmatrix}\begin{bmatrix} -0.071\,207 \\ 0.003\,159\,4 \end{bmatrix} = \begin{bmatrix} -4.5621 \\ 8.6880 \end{bmatrix}$$

STEP 3:

$$\hat{\mathbf{X}} + \mathbf{D} = \begin{bmatrix} 316.60 \\ 362.23 \end{bmatrix} + \begin{bmatrix} -4.5621 \\ 8.6880 \end{bmatrix} = \begin{bmatrix} 311.94 \\ 370.92 \end{bmatrix}$$

which we take as the updated $\hat{\mathbf{X}}$.

STEP 4:

$$\beta = f(\hat{\mathbf{X}}) = f(311.94, 370.92) = -910.58$$

$$\beta - \alpha = -910.58 - (-910.76) = 0.18 < 0.25$$

STEP 5:

$$\mathbf{X}^* = \hat{\mathbf{X}} = \begin{bmatrix} 311.94 \\ 370.92 \end{bmatrix} \qquad \text{and} \qquad f(\mathbf{X}^*) = \beta = -910.58$$

Thus Problem 1.14 is solved by $x_1^* = 311.94$ km, $x_2^* = 370.92$ km, with $z^* = +910.58$ km.

11.12 Show that the maximum located by the Fletcher-Powell method in Problem 11.11 is in fact the desired global maximum.

In view of Theorem 11.6, it suffices to show that $f(\mathbf{X})$, as given by (1) of Problem 11.11, is concave everywhere. Indeed, we need only show that the function

$$g(\mathbf{X}) = -\sqrt{x_1^2 + x_2^2}$$

is concave everywhere, since $f(\mathbf{X})$ is the sum of three functions of this type, and the sum of concave functions is a concave function. Now,

$$\mathbf{H}_g = \frac{1}{(x_1^2 + x_2^2)^{3/2}}\begin{bmatrix} -x_2^2 & x_1x_2 \\ x_1x_2 & -x_1^2 \end{bmatrix}$$

which, by Theorem 11.1, is negative semi-definite everywhere. Thus, by Theorem 11.5, $g(\mathbf{X})$ is concave everywhere.

11.13 Derive the Newton-Raphson method.

Suppose that an approximation, $\mathbf{X}_k$, to a stationary point of $f(\mathbf{X})$ has been determined; we wish to find a nearby point, $\mathbf{X}_{k+1}$, that furnishes an even better approximation. Expanding the vector ∇f in a Taylor series about $\mathbf{X}_k$, we have

$$\nabla f|_{\mathbf{X}_{k+1}} = \nabla f|_{\mathbf{X}_k} + \mathbf{H}_f|_{\mathbf{X}_k}(\mathbf{X}_{k+1} - \mathbf{X}_k) + \cdots \tag{1}$$

[The reader should verify that the ith row of (1) is the ordinary multivariable Taylor series for $\partial f/\partial x_i$.] Thus $\nabla f|_{\mathbf{X}_{k+1}}$ will vanish, to the second order in small quantities, if

$$\mathbf{H}_f|_{\mathbf{X}_k}(\mathbf{X}_{k+1} - \mathbf{X}_k) = -\nabla f|_{\mathbf{X}_k} \qquad \text{or} \qquad \mathbf{X}_{k+1} - \mathbf{X}_k = -(\mathbf{H}_f|_{\mathbf{X}_k})^{-1}\nabla f|_{\mathbf{X}_k}$$

which is precisely the Newton-Raphson formula.

11.14 Use the modified Hooke-Jeeves' pattern search to

$$\text{maximize:} \quad z = 3x_1 + 2x_2 + x_3 - 0.02(x_1^4 + x_2^4 + x_3^4 - 325)^2 - 0.02(x_1x_2)^2$$

We arbitrarily begin with $h = 1$ and $\mathbf{B} = [0, 0, 0]^T$. Then $f(\mathbf{B}) = -2112.5$.

STEP 1:

$$f(0+1,0,0) = -2096.52 \quad \text{(an improvement)}$$
$$f(1,0+1,0) = -2081.60 \quad \text{(an improvement)}$$
$$f(1,1,0+1) = -2067.70 \quad \text{(an improvement)}$$

Set $\mathbf{C} = [1,1,1]^T$, with $f(\mathbf{C}) = -2067.70$.

STEP 3:

$$\mathbf{T} = 2[1,1,1]^T - [0,0,0]^T = [2,2,2]^T$$

STEP 4:

$$f(2+1,2,2) = -884.60 \quad \text{(an improvement over } -2067.70)$$
$$f(3,2+1,2) = -416.80 \quad \text{(an improvement)}$$
$$f(3,3,2+1) = -118.10 \quad \text{(an improvement)}$$

Set $\mathbf{S} = [3,3,3]^T$.

STEP 6: Set $\mathbf{B} = [1,1,1]^T$ and $\mathbf{C} = [3,3,3]^T$, with $f(\mathbf{C}) = -118.10$.

STEP 3:

$$\mathbf{T} = 2[3,3,3]^T - [1,1,1]^T = [5,5,5]^T$$

STEP 4:

$$f(5+1,5,5) = -98\,641.8 \quad \text{(not an improvement over } -118.10)$$
$$f(5-1,5,5) = -27\,876.2 \quad \text{(not an improvement)}$$
$$f(5,5+1,5) = -98\,642.8 \quad \text{(not an improvement)}$$
$$f(5,5-1,5) = -27\,875.2 \quad \text{(not an improvement)}$$
$$f(5,5,5+1) = -98\,638.3 \quad \text{(not an improvement)}$$
$$f(5,5,5-1) = -27\,867.7 \quad \text{(not an improvement)}$$

STEP 5: Set $\mathbf{B} = [3,3,3]^T$, with $f(\mathbf{B}) = -118.10$.

STEP 1:

$$f(3+1,3,3) = -154.86 \quad \text{(not an improvement)}$$
$$f(3-1,3,3) = -417.90 \quad \text{(not an improvement)}$$
$$f(3,3+1,3) = -155.86 \quad \text{(not an improvement)}$$
$$f(3,3-1,3) = -416.90 \quad \text{(not an improvement)}$$
$$f(3,3,3+1) = -155.60 \quad \text{(not an improvement)}$$
$$f(3,3,3-1) = -416.80 \quad \text{(not an improvement)}$$

Set $\mathbf{C} = [3,3,3]^T$.

STEP 2: We sequentially evaluate the objective at all points obtained from $\mathbf{B}$ by perturbing one or more of the components of $\mathbf{B}$ by either 1 or -1. There are 26 possible perturbations, excluding the null perturbation. Functional evaluations cease if and when one yields a value larger than $f(\mathbf{B}) = -118.10$. As shown in Table 11-1, this occurs at $[2,2,4]^T$. Therefore, we update $\mathbf{B} = [2,2,4]^T$, with $f(\mathbf{B}) = -13.70$.

Table 11-1

x_1	x_2	x_3	$f(x_1, x_2, x_3)$
2	2	2	−1522.90
2	2	3	−886.20
2	2	4	−13.70
2	3	2	
...	...	...	
4	4	3	
4	4	4	

STEP 1:

$$f(2+1, 2, 4) = 0.60 \quad \text{(an improvement)}$$
$$f(3, 2+1, 4) = -155.6 \quad \text{(not an improvement)}$$
$$f(3, 2-1, 4) = 11.44 \quad \text{(an improvement)}$$
$$f(3, 1, 4+1) = -2902.66 \quad \text{(not an improvement)}$$
$$f(3, 1, 4-1) = -511.06 \quad \text{(not an improvement)}$$

Set $\mathbf{C} = [3, 1, 4]^T$, with $f(\mathbf{C}) = 11.44$.

STEP 3:

$$\mathbf{T} = 2[3, 1, 4]^T - [2, 2, 4]^T = [4, 0, 4]^T$$

STEP 4:

$$f(4+1, 0, 4) = -6163.72 \quad \text{(not an improvement over 11.44)}$$
$$f(4-1, 0, 4) = 10.12 \quad \text{(not an improvement)}$$
$$f(4, 0+1, 4) = -689.32 \quad \text{(not an improvement)}$$
$$f(4, 0-1, 4) = -693.20 \quad \text{(not an improvement)}$$
$$f(4, 0, 4+1) = -6165.72 \quad \text{(not an improvement)}$$
$$f(4, 0, 4-1) = 12.12 \quad \text{(an improvement)}$$

Set $\mathbf{S} = [4, 0, 3]^T$.

STEP 6: Set $\mathbf{B} = [3, 1, 4]^T$ and $\mathbf{C} = [4, 0, 3]^T$, with $f(\mathbf{C}) = 12.12$.

STEP 3:

$$\mathbf{T} = 2[4, 0, 3]^T - [3, 1, 4]^T = [5, -1, 2]^T$$

STEP 4:

$$f(5+1, -1, 2) = -19\,505.6 \quad \text{(not an improvement over 12.12)}$$
$$f(5-1, -1, 2) = -42.40 \quad \text{(not an improvement)}$$
$$f(5, -1+1, 2) = -1980.12 \quad \text{(not an improvement)}$$
$$f(5, -1-1, 2) = -2193.48 \quad \text{(not an improvement)}$$
$$f(5, -1, 2+1) = -2902.98 \quad \text{(not an improvement)}$$
$$f(5, -1, 2-1) = -1810.58 \quad \text{(not an improvement)}$$

Set $\mathbf{S} = [5, -1, 2]^T$.

STEP 5: Set $\mathbf{B} = [4, 0, 3]^T$, with $f(\mathbf{B}) = 12.12$.

Table 11-2

x_1	x_2	x_3	$f(x_1, x_2, x_3)$
3	0	2	−1028.68
3	0	3	−519.38
3	0	4	10.12
3	1	2	−1017.76
3	1	3	−511.06
3	1	4	11.44
3	2	2	−884.60
3	2	3	−416.90
3	2	4	0.60
4	0	2	−42.18
4	0	3	12.12
4	0	4	−683.38
4	1	2	−38.40
4	1	4	−689.20
4	2	2	−10.66
4	2	3	2.04
4	2	4	−805.46
5	0	2	−1980.12
5	0	3	−2885.22
5	0	4	−6163.72
5	1	2	−1991.28
5	1	3	−2898.98
5	1	4	−6184.48
5	2	2	−2185.48
5	2	3	−3132.18
5	2	4	−6522.68

STEP 1: Exploratory moves around **B** yield $f(4, 1, 3) = 13.30$, an improvement. Set $\mathbf{C} = [4, 1, 3]^T$, with $f(\mathbf{C}) = 13.30$.

STEP 3:

$$\mathbf{T} = 2[4, 1, 3]^T - [4, 0, 3]^T = [4, 2, 3]^T$$

STEP 4: Exploratory moves around **T** do not yield any improvements. Set $\mathbf{S} = [4, 2, 3]^T$.

STEP 5: Set $\mathbf{B} = [4, 1, 3]^T$, with $f(\mathbf{B}) = 13.30$.

STEP 1: Exploratory moves around **B** do not yield any improvement. Set $\mathbf{C} = [4, 1, 3]^T$, with $f(\mathbf{C}) = 13.30$.

STEP 2: As shown in Table 11-2, none of the 26 perturbations of **B** yields an improvement in the current value of the objective function, $f(\mathbf{B}) = 13.30$. Therefore, $\mathbf{B} = [4, 1, 3]^T$ is the best integral solution (because $h = 1$, and we started at the integer point $x_1 = x_2 = x_3 = 0$) to the given program.

To improve this approximation, we reduce h sequentially to 0.1, 0.01, and 0.001, beginning the algorithm anew each time with the latest **B**. The results are exhibited in Table 11-3. We take $x_1^* = 3.825$, $x_2^* = 2.447$, and $x_3^* = 2.946$, with $z^* = 17.56$, as the optimal solution.

Table 11-3

h	Final Vector			z
	x_1	x_2	x_3	
1	4	1	3	13.30
0.1	3.9	1.4	3.1	16.88
0.01	3.89	2.40	2.82	17.54
0.001	3.825	2.447	2.946	17.56

Supplementary Problems

Solve Problems 11.15 through 11.23 numerically, using either a random number generator or a reasonable guess to provide an initial approximation. Wherever possible, also solve analytically.

11.15 $$\text{maximize:} \quad z = -(2x_1 - 5)^2 - (x_2 - 3)^2 - (5x_3 - 2)^2$$

11.16 $$\text{minimize:} \quad z = |x_1| + \sqrt{(x_1 - 1)^2 + x_2^2}$$

11.17 $$\text{minimize:} \quad z = \frac{8x_1 + 4x_2 - x_1x_2}{(x_1x_2)^2}$$

11.18 $$\text{minimize:} \quad z = -\sin x_1 \sin x_2 \sin (x_1 + x_2)$$

11.19 $$\text{maximize:} \quad z = (x_1^2 + 2x_2^2)e^{-(x_1^2 + x_2^2)}$$

11.20 $$\text{maximize:} \quad z = -(x_1 - x_2)^2 - (x_3 - 1)^2 - 1 - 0.02(x_1^5 + x_2^5 + x_3^5 - 16)^2$$

11.21 $$\text{maximize:} \quad z = -(x_1 - \sqrt{5})^2 - (x_2 - \pi)^2 - 10$$
$$\text{with:} \quad x_1 \text{ and } x_2 \text{ integers}$$

(*Hint*: See Problem 11.12.)

11.22 Minimize the *Rosenbrock function*, $z = (1 - x_1)^2 + 100(x_2 - x_1^2)^2$.

11.23 Census figures for a midwestern town are as follows:

Year	1930	1940	1950	1960	1970
Population	4953	7389	11 023	16 445	24 532

Based on these data, an estimate for the population in 1980 is required.

(1) Assume that the population growth is exponential and follows a curve of the form $N = Ae^{mt}$, where N denotes the population and t denotes time.

(2) At any given census year T, there may be a discrepancy between the actual value of N given by the data and the theoretical value $N = Ae^{mT}$. Designate this error as e_T: e.g.,

$$e_{1930} = 4953 - Ae^{m(1930)}$$

(3) Determine the constants A and m so that

$$e_{1930}^2 + e_{1940}^2 + e_{1950}^2 + e_{1960}^2 + e_{1970}^2$$

is minimized.

(4) Using these constants, evaluate the theoretical exponential curve (often called the *least-squares exponential curve*) at $t = 1980$ and take that number to be the estimated population for 1980.

11.24 Show that the quadratic function

$$f(x_1, x_2, \ldots, x_n) = \sum_{i=1}^{n} \sum_{j=1}^{n} a_{ij}x_ix_j$$

with symmetric coefficient matrix $\mathbf{A}$, is concave if and only if $\mathbf{A}$ is negative semi-definite.

Chapter 12

Nonlinear Programming: Multivariable Optimization with Constraints

STANDARD FORMS

With $\mathbf{X} \equiv [x_1, x_2, \ldots, x_n]^T$, standard form for nonlinear programs containing only *equality* constraints is

$$\begin{aligned} \text{maximize:} \quad & z = f(\mathbf{X}) \\ \text{subject to:} \quad & g_1(\mathbf{X}) = 0 \\ & g_2(\mathbf{X}) = 0 \\ & \cdots\cdots\cdots \\ & g_m(\mathbf{X}) = 0 \\ \text{with:} \quad & m < n \quad \text{(fewer constraints than variables)} \end{aligned} \tag{12.1}$$

As in Chapter 11, minimization programs are converted into maximization programs by multiplying the objective function by -1.

Standard form for nonlinear programs containing only *inequality* constraints is either

$$\begin{aligned} \text{maximize:} \quad & z = f(\mathbf{X}) \\ \text{subject to:} \quad & g_1(\mathbf{X}) \le 0 \\ & g_2(\mathbf{X}) \le 0 \\ & \cdots\cdots\cdots \\ & g_p(\mathbf{X}) \le 0 \end{aligned} \tag{12.2}$$

or

$$\begin{aligned} \text{maximize:} \quad & z = f(\mathbf{X}) \\ \text{subject to:} \quad & g_1(\mathbf{X}) \le 0 \\ & g_2(\mathbf{X}) \le 0 \\ & \cdots\cdots\cdots \\ & g_m(\mathbf{X}) \le 0 \\ \text{with:} \quad & \mathbf{X} \ge \mathbf{0} \end{aligned} \tag{12.3}$$

The two forms are equivalent: (*12.2*) goes over into (*12.3*) (with $m = p$) under the substitution $\mathbf{X} = \mathbf{U} - \mathbf{V}$, with $\mathbf{U} \ge \mathbf{0}$ and $\mathbf{V} \ge \mathbf{0}$; on the other hand, (*12.3*) is just (*12.2*) in the special case $p = m + n$ and $g_{m+i}(\mathbf{X}) = -x_i$ $(i = 1, 2, \ldots, n)$. Form (*12.3*) is appropriate when the solution procedure requires nonnegative variables. In (*12.1*), (*12.2*), or (*12.3*), f is a nonlinear function, but some or all of the g's may be linear.

Nonlinear programs not in standard form are solved either by putting them in such form (see

Problems 12.7, 12.10, and 12.11) or by suitably modifying the solution procedures given below for programs in standard form (see Problems 12.8, 12.9, and 12.12).

LAGRANGE MULTIPLIERS

To solve program (*12.1*), first form the *Lagrangian function*

$$L(x_1, x_2, \ldots, x_n, \lambda_1, \lambda_2, \ldots, \lambda_m) \equiv f(\mathbf{X}) - \sum_{i=1}^{m} \lambda_i g_i(\mathbf{X}) \tag{12.4}$$

where λ_i $(i = 1, 2, \ldots, m)$ are (unknown) constants called *Lagrange multipliers*. Then solve the system of $n + m$ equations

$$\begin{aligned} \frac{\partial L}{\partial x_j} &= 0 \qquad (j = 1, 2, \ldots, n) \\ \frac{\partial L}{\partial \lambda_i} &= 0 \qquad (i = 1, 2, \ldots, m) \end{aligned} \tag{12.5}$$

Theorem 12.1: *If a solution to program (12.1) exists*, it is contained among the solutions to system (*12.5*), provided $f(\mathbf{X})$ and $g_i(\mathbf{X})$ $(i = 1, 2, \ldots, m)$ all have continuous first partial derivatives and the $m \times n$ *Jacobian matrix*,

$$\mathbf{J} \equiv \left[\frac{\partial g_i}{\partial x_j}\right]$$

has rank m at $\mathbf{X} = \mathbf{X}^*$.

(See Problems 12.1 through 12.5.) The method of Lagrange multipliers is equivalent to using the constraint equations to eliminate certain of the x-variables from the objective function and then solving an unconstrained maximization problem in the remaining x-variables.

NEWTON-RAPHSON METHOD

Since $L(x_1, x_2, \ldots, x_n, \lambda_1, \lambda_2, \ldots, \lambda_m) \equiv L(\mathbf{Z})$ is nonlinear, it is usually impossible to solve (*12.5*) analytically. However, since the solutions to (*12.5*) are the stationary points of $L(\mathbf{Z})$, and since (Theorem 11.3) the maxima and minima of $L(\mathbf{Z})$ occur among these stationary points, it should be possible to use the Newton-Raphson method (Chapter 11) to approximate the "right" extremum of $L(\mathbf{Z})$; that is, the one that corresponds to the optimal solution of (*12.1*). The iterative formula applicable here is

$$\mathbf{Z}_{k+1} = \mathbf{Z}_k - (\mathbf{H}_L|_{\mathbf{Z}_k})^{-1} \nabla L|_{\mathbf{Z}_k} \tag{12.6}$$

(See Problem 12.3.)

This approach is of limited value because, as in Chapter 11, it is very difficult to determine an adequate $\mathbf{Z}_0$. For an incorrect $\mathbf{Z}_0$, the Newton-Raphson method may diverge or may converge to the "wrong" extremum of $L(\mathbf{Z})$. It is also possible (see Problems 12.1 and 12.4) for the method to converge when no optimal solution exists.

PENALTY FUNCTIONS

An alternative approach to solving program (*12.1*) involves the unconstrained program

$$\text{maximize:} \quad \hat{f} = f(\mathbf{X}) - \sum_{i=1}^{m} p_i g_i^2(\mathbf{X}) \tag{12.7}$$

where $p_i > 0$ are constants (still to be chosen) called *penalty weights*. The solution to program (*12.7*) is the solution to program (*12.1*) when each $g_i(\mathbf{X}) = 0$. For large values of the p_i, the solution to (*12.7*) will have each $g_i(\mathbf{X})$ near zero to avoid adverse effects on the objective function from the terms $p_i g_i^2(\mathbf{X})$; and as each $p_i \to \infty$, each $g_i(\mathbf{X}) \to 0$. (See Problem 12.6.)

In practice, this process cannot be accomplished analytically except in rare cases. Instead, program (*12.7*) is solved repeatedly by the modified pattern search described in Chapter 11, each time with either a new set of increased penalty weights or a decreased step size. Each pattern search with a specified set of penalty weights and a given step size is one phase of the solution procedure. The starting vector for a particular phase is the final vector from the phase immediately preceding it. Penalty weights for the first phase are chosen small, often $1/50 = 0.02$; the first step size generally is taken as 1.

Convergence of this procedure is affected by the rates at which the penalty weights are increased and the step size is decreased. Decisions governing these rates are more a matter of art than of science. (See Problem 12.7.)

KUHN-TUCKER CONDITIONS

To solve program (*12.3*), first rewrite the nonnegativity conditions as $-x_1 \le 0$, $-x_2 \le 0$, $\ldots$, $-x_n \le 0$, so that the constraint set is $m + n$ inequality requirements each with a less than or equals sign. Next add slack variables $x_{n+1}^2, x_{n+2}^2, \ldots, x_{2n+m}^2$, respectively, to the left-hand sides of the constraints, thereby converting each inequality into an equality. Here the slack variables are added as squared terms to guarantee their nonnegativity. Then form the Lagrangian function

$$L \equiv f(\mathbf{X}) - \sum_{i=1}^{m} \lambda_i[g_i(\mathbf{X}) + x_{n+i}^2] - \sum_{i=m+1}^{m+n} \lambda_i[-x_i + x_{n+i}^2] \tag{12.8}$$

where $\lambda_1, \lambda_2, \ldots, \lambda_{m+n}$ are Lagrange multipliers. Finally solve the system

$$\frac{\partial L}{\partial x_j} = 0 \qquad (j = 1, 2, \ldots, 2n + m) \tag{12.9}$$

$$\frac{\partial L}{\partial \lambda_i} = 0 \qquad (i = 1, 2, \ldots, m + n) \tag{12.10}$$

$$\lambda_i \ge 0 \qquad (i = 1, 2, \ldots, m + n) \tag{12.11}$$

Equations (*12.9*) through (*12.11*) constitute the *Kuhn-Tucker conditions* for program (*12.2*) or (*12.3*). The first two sets, (*12.9*) and (*12.10*), follow directly from Lagrange multiplier theory; set (*12.11*) is known as the *constraint qualification*. Among the solutions to the Kuhn-Tucker conditions will be the solution to program (*12.3*) if $f(\mathbf{X})$ and each $g_i(\mathbf{X})$ have continuous first partial derivatives. (See Problem 12.10.)

METHOD OF FEASIBLE DIRECTIONS

This is a five-step algorithm for solving program (*12.2*). The method is applicable only when the feasible region has an interior, and then it will converge to the global maximum only if the initial approximation is "near" the solution (see Problems 12.13 and 12.14). The feasible region will have no interior if two of the inequality constraints have arisen from the conversion of an equality constraint (see Problem 12.11).

STEP 1: Determine an initial, feasible approximation to the solution, designating it $\mathbf{B}$.

STEP 2: Solve the following linear program for the variables $d_1, d_2, \ldots, d_{n+1}$:

$$
\begin{aligned}
&\text{maximize:} \quad z = d_{n+1} \\
&\text{subject to:} \; -\left.\frac{\partial f}{\partial x_1}\right|_{\mathbf{B}} d_1 - \left.\frac{\partial f}{\partial x_2}\right|_{\mathbf{B}} d_2 - \cdots - \left.\frac{\partial f}{\partial x_n}\right|_{\mathbf{B}} d_n + \quad d_{n+1} \le \quad 0 \\
&\qquad \left.\frac{\partial g_1}{\partial x_1}\right|_{\mathbf{B}} d_1 + \left.\frac{\partial g_1}{\partial x_1}\right|_{\mathbf{B}} d_2 + \cdots + \left.\frac{\partial g_1}{\partial x_n}\right|_{\mathbf{B}} d_n + k_1 d_{n+1} \le -g_1(\mathbf{B}) \\
&\qquad \left.\frac{\partial g_2}{\partial x_1}\right|_{\mathbf{B}} d_1 + \left.\frac{\partial g_2}{\partial x_2}\right|_{\mathbf{B}} d_2 + \cdots + \left.\frac{\partial g_2}{\partial x_n}\right|_{\mathbf{B}} d_n + k_2 d_{n+1} \le -g_2(\mathbf{B}) \\
&\qquad \cdots\cdots\cdots\cdots\cdots\cdots\cdots\cdots\cdots\cdots\cdots\cdots \\
&\qquad \left.\frac{\partial g_p}{\partial x_1}\right|_{\mathbf{B}} d_1 + \left.\frac{\partial g_p}{\partial x_2}\right|_{\mathbf{B}} d_2 + \cdots + \left.\frac{\partial g_p}{\partial x_n}\right|_{\mathbf{B}} d_n + k_p d_{n+1} \le -g_p(\mathbf{B}) \\
&\text{with:} \quad d_j \le 1 \quad (j = 1, 2, \ldots, n+1)
\end{aligned}
\tag{12.12}
$$

Here k_i $(i = 1, 2, \ldots, p)$ is 0 if $g_i(\mathbf{X})$ is linear and 1 if $g_i(\mathbf{X})$ is nonlinear.

STEP 3: If $d_{n+1} = 0$, then $\mathbf{X}^* = \mathbf{B}$; if not, go to Step 4.

STEP 4: Set $\mathbf{D} = [d_1, d_2, \ldots, d_n]^T$. Determine a nonnegative value for λ that maximizes $f(\mathbf{B} + \lambda\mathbf{D})$ while keeping $\mathbf{B} + \lambda\mathbf{D}$ feasible; designate this value as λ^*.

STEP 5: Set $\mathbf{B} = \mathbf{B} + \lambda^*\mathbf{D}$ and return to Step 2.

(See Problems 12.13 through 12.15.)

Solved Problems

12.1

$$
\begin{aligned}
&\text{maximize:} \quad z = 2x_1 + x_1x_2 + 3x_2 \\
&\text{subject to:} \quad x_1^2 + x_2 = 3
\end{aligned}
$$

It is apparent that for any large negative x_1 there is a large negative x_2 such that the constraint equation is satisfied. But then $z \approx x_1x_2 \to \infty$. There is no global maximum.

12.2

$$
\begin{aligned}
&\text{minimize:} \quad z = x_1 + x_2 + x_3 \\
&\text{subject to:} \quad x_1^2 + x_2 = 3 \\
&\qquad\qquad\quad\; x_1 + 3x_2 + 2x_3 = 7
\end{aligned}
$$

The given program is equivalent to the unconstrained minimization of

$$z = \tfrac{1}{2}(x_1^2 + x_1 + 4)$$

which obviously has a solution. We may therefore apply the method of Lagrange multipliers to the original program standardized as

$$
\begin{aligned}
&\text{maximize:} \quad z = -x_1 - x_2 - x_3 \\
&\text{subject to:} \quad x_1^2 + x_2 - 3 = 0 \\
&\qquad\qquad\quad\; x_1 + 3x_2 + 2x_3 - 7 = 0
\end{aligned}
\tag{1}
$$

Here, $f(x_1, x_2, x_3) = -x_1 - x_2 - x_3$, $n = 3$ (variables), $m = 2$ (constraints),

$$g_1(x_1, x_2, x_3) = x_1^2 + x_2 - 3 \qquad g_2(x_1, x_2, x_3) = x_1 + 3x_2 + 2x_3 - 7$$

The Lagrangian function is then

$$L = (-x_1 - x_2 - x_3) - \lambda_1(x_1^2 + x_2 - 3) - \lambda_2(x_1 + 3x_2 + 2x_3 - 7)$$

and system (*12.5*) becomes

$$\frac{\partial L}{\partial x_1} = -1 - 2x_1\lambda_1 - \lambda_2 = 0 \tag{2}$$

$$\frac{\partial L}{\partial x_2} = -1 - \lambda_1 - 3\lambda_2 = 0 \tag{3}$$

$$\frac{\partial L}{\partial x_3} = -1 - 2\lambda_2 = 0 \tag{4}$$

$$\frac{\partial L}{\partial \lambda_1} = -(x_1^2 + x_2 - 3) = 0 \tag{5}$$

$$\frac{\partial L}{\partial \lambda_2} = -(x_1 + 3x_2 + 2x_3 - 7) = 0 \tag{6}$$

Successively solving (*4*) for λ_2, (*3*) for λ_1, (*2*) for x_1, (*5*) for x_2, and (*6*) for x_3, we obtain the unique solution $\lambda_2 = -0.5$, $\lambda_1 = 0.5$, $x_1 = -0.5$, $x_2 = 2.75$, and $x_3 = -0.375$, with

$$z = -x_1 - x_2 - x_3 = -(-0.5) - 2.75 - (-0.375) = -1.875$$

Since the first partial derivatives of $f(x_1, x_2, x_3)$, $g_1(x_1, x_2, x_3)$, and $g_2(x_1, x_2, x_3)$ are all continuous, and since

$$\mathbf{J} = \begin{bmatrix} \dfrac{\partial g_1}{\partial x_1} & \dfrac{\partial g_1}{\partial x_2} & \dfrac{\partial g_1}{\partial x_3} \\ \dfrac{\partial g_2}{\partial x_1} & \dfrac{\partial g_2}{\partial x_2} & \dfrac{\partial g_2}{\partial x_3} \end{bmatrix} = \begin{bmatrix} 2x_1 & 1 & 0 \\ 1 & 3 & 2 \end{bmatrix}$$

is of rank 2 everywhere (the last two columns are linearly independent everywhere), either $x_1 = -0.5$, $x_2 = 2.75$, $x_3 = -0.375$ is the optimal solution to program (*1*) or no optimal solution exists. Checking feasible points in the region around $(-0.5, 2.75, -0.375)$, we find that this point is indeed the location of a (global) maximum for program (*1*). Therefore, it is also the location of a global minimum for the original program, with $z^* = -(-1.875) = 1.875$.

$$z^* = -(-1.875) = 1.875$$

12.3

$$\text{maximize:} \quad z = \sin(x_1x_2 + x_3)$$
$$\text{subject to:} \quad -x_1x_2^3 + x_1^2x_3^2 = 5$$

As in Problem 12.2, it is possible to establish in advance that an optimal solution exists. Indeed, by inspection, the point $x_1 = 2\sqrt{5}/\pi$, $x_2 = 0$, $x_3 = \pi/2$ satisfies the constraint equation and makes $z = 1$; therefore it must represent a global maximum.

Let us apply the method of Lagrange multipliers to this problem. The Lagrangian function here is

$$L = \sin(x_1x_2 + x_3) - \lambda_1(x_1^2x_3^2 - x_1x_2^3 - 5)$$

so that the Lagrangian equations are

$$\frac{\partial L}{\partial x_1} = x_2\cos(x_1x_2 + x_3) - 2\lambda_1x_1x_3^2 + \lambda_1x_2^3 = 0$$

$$\frac{\partial L}{\partial x_2} = x_1\cos(x_1x_2 + x_3) + 3\lambda_1x_1x_2^2 = 0$$

$$\frac{\partial L}{\partial x_3} = \cos(x_1x_2 + x_3) - 2\lambda_1 x_1^2 x_3 = 0$$

$$\frac{\partial L}{\partial \lambda_1} = -(x_1^2x_3^2 - x_1x_2^3 - 5) = 0$$

As these equations cannot be solved algebraically, we go over to the Newton-Raphson approach. The gradient vector and Hessian matrix of the Lagrangian function are

$$\nabla L = \begin{bmatrix} x_2\cos(x_1x_2 + x_3) - 2\lambda_1 x_1 x_3^2 + \lambda_1 x_2^3 \\ x_1\cos(x_1x_2 + x_3) + 3\lambda_1 x_1 x_2^2 \\ \cos(x_1x_2 + x_3) - 2\lambda_1 x_1^2 x_3 \\ -(x_1^2x_3^2 - x_1x_2^3 - 5) \end{bmatrix}$$

$$\mathbf{H}_L = \left[\begin{array}{c|c|c|c} -x_2^2\sin(x_1x_2 + x_3) - 2\lambda_1 x_3^2 & & & \\ \hline \cos(x_1x_2 + x_3) & -x_1^2\sin(x_1x_2 + x_3) + 6\lambda_1 x_1 x_2 & & \\ -x_1x_2\sin(x_1x_2 + x_3) + 3\lambda_1 x_2^2 & & & \\ \hline -x_2\sin(x_1x_2 + x_3) - 4\lambda_1 x_1 x_3 & -x_1\sin(x_1x_2 + x_3) & -\sin(x_1x_2 + x_3) - 2\lambda_1 x_1^2 & \\ \hline -2x_1x_3^2 + x_2^3 & 3x_1x_2^2 & -2x_1^2x_3 & 0 \end{array}\right]$$

(The superdiagonal entries of the symmetric matrix have been omitted to save space.) Arbitrarily taking

$$\mathbf{Z}_0 = [-1, 1, 2.5, 1]^T$$

we calculate as follows (rounding all computations to four significant figures).

First iteration.

$$\nabla L|_{\mathbf{Z}_0} = \begin{bmatrix} 13.57 \\ -3.071 \\ -4.929 \\ -2.25 \end{bmatrix} \qquad \mathbf{H}_L|_{\mathbf{Z}_0} = \begin{bmatrix} -13.50 & 4.068 & 9.003 & 13.5 \\ 4.068 & -6.997 & 0.9975 & -3 \\ 9.003 & 0.9975 & -2.998 & -5 \\ 13.5 & -3 & -5 & 0 \end{bmatrix}$$

$$(\mathbf{H}_L|_{\mathbf{Z}_0})^{-1} = \begin{bmatrix} 0.057\,37 & 0.038\,45 & 0.131\,8 & 0.031\,94 \\ 0.038\,45 & -0.082\,06 & 0.153\,1 & -0.038\,89 \\ 0.131\,8 & 0.153\,1 & 0.264\,1 & -0.090\,44 \\ 0.031\,94 & -0.038\,89 & -0.090\,44 & 0.104\,0 \end{bmatrix}$$

Hence

$$\mathbf{Z}_1 = \mathbf{Z}_0 - (\mathbf{H}_L|_{\mathbf{Z}_0})^{-1}\nabla L|_{\mathbf{Z}_0} = [-0.9388, 0.8931, 2.279, 0.2353]^T$$

Second iteration.

$$\nabla L|_{\mathbf{Z}_1} = \begin{bmatrix} 2.579 \\ -0.650\,3 \\ -0.815\,8 \\ 0.247\,9 \end{bmatrix} \qquad \mathbf{H}_L|_{\mathbf{Z}_1} = \begin{bmatrix} -3.236 & 1.524 & 1.128 & 10.47 \\ 1.524 & -2.058 & 0.9309 & -2.247 \\ 1.128 & 0.9309 & -1.406 & -4.018 \\ 10.47 & -2.247 & -4.018 & 0 \end{bmatrix}$$

$$(\mathbf{H}_L|_{\mathbf{Z}_1})^{-1} = \begin{bmatrix} 0.807\,2 & 1.224 & 1.418 & 0.013\,91 \\ 1.224 & 1.574 & 2.309 & -0.099\,69 \\ 1.418 & 2.309 & 2.404 & -0.156\,9 \\ 0.013\,91 & -0.099\,69 & -0.156\,9 & 0.035\,73 \end{bmatrix}$$

Hence

$$\mathbf{Z}_2 = \mathbf{Z}_1 - (\mathbf{H}_L|_{\mathbf{Z}_1})^{-1}\nabla L|_{\mathbf{Z}_1} = [-1.064,\ 0.6190,\ 2.046,\ 0.015\,45]^T$$

Continuing in this manner, we obtain successively

$$\mathbf{Z}_3 = [-1.053,\ 0.5067,\ 2.099,\ 0.001\,369]^T$$
$$\mathbf{Z}_4 = [-1.053,\ 0.4982,\ 2.095,\ 0.000\,009]^T$$
$$\mathbf{Z}_5 = [-1.053,\ 0.4981,\ 2.095,\ 0]^T$$

As the components of $\mathbf{Z}$ have stabilized to three significant figures, we take $x_1^* = -1.05$, $x_2^* = 0.498$, $x_3^* = 2.10$, and $\lambda_1 = 0$, with

$$z^* = \sin(x_1^* x_2^* + x_3^*) = 1.00$$

Observe that the Newton-Raphson method has converged to a different global maximum from the one originally identified.

12.4 Disregarding Problem 12.1, use the Newton-Raphson method to

$$\text{maximize:} \quad z = 2x_1 + x_1x_2 + 3x_2$$
$$\text{subject to:} \quad x_1^2 + x_2 = 3$$

Here, $L = (2x_1 + x_1x_2 + 3x_2) - \lambda_1(x_1^2 + x_2 - 3)$. Therefore,

$$\nabla L = \begin{bmatrix} 2 + x_2 - 2\lambda_1 x_1 \\ x_1 + 3 - \lambda_1 \\ -x_1^2 - x_2 + 3 \end{bmatrix} \qquad \mathbf{H}_L = \begin{bmatrix} -2\lambda_1 & 1 & -2x_1 \\ 1 & 0 & -1 \\ -2x_1 & -1 & 0 \end{bmatrix}$$

Arbitrarily taking $\mathbf{Z}_0 = [1, 1, 1]^T$, we calculate:

First iteration.

$$\nabla L|_{\mathbf{Z}_0} = \begin{bmatrix} 1 \\ 3 \\ 1 \end{bmatrix} \qquad \mathbf{H}_L|_{\mathbf{Z}_0} = \begin{bmatrix} -2 & 1 & -2 \\ 1 & 0 & -1 \\ -2 & -1 & 0 \end{bmatrix} \qquad (\mathbf{H}_L|_{\mathbf{Z}_0})^{-1} = \frac{1}{6}\begin{bmatrix} -1 & 2 & -1 \\ 2 & -4 & -4 \\ -1 & -4 & -1 \end{bmatrix}$$

and

$$\mathbf{Z}_1 = \mathbf{Z}_0 - (\mathbf{H}_L|_{\mathbf{Z}_0})^{-1}\nabla L|_{\mathbf{Z}_0} = [1/3,\ 10/3,\ 10/3]^T$$

Second iteration.

$$\nabla L|_{\mathbf{Z}_1} = \begin{bmatrix} 28/9 \\ 0 \\ -4/9 \end{bmatrix} \qquad \mathbf{H}_L|_{\mathbf{Z}_1} = \frac{1}{3}\begin{bmatrix} -20 & 3 & -2 \\ 3 & 0 & -3 \\ -2 & -3 & 0 \end{bmatrix} \qquad (\mathbf{H}_L|_{\mathbf{Z}_1})^{-1} = \frac{1}{72}\begin{bmatrix} -9 & 6 & -9 \\ 6 & -4 & -66 \\ -9 & -66 & -9 \end{bmatrix}$$

and

$$\mathbf{Z}_2 = \mathbf{Z}_1 - (\mathbf{H}_L|_{\mathbf{Z}_1})^{-1}\nabla L|_{\mathbf{Z}_1} = [2/3,\ 8/3,\ 11/3]^T$$

Continuing for two more iterations, we obtain

$$\mathbf{Z}_3 = [0.6333,\ 2.6,\ 3.633]^T$$
$$\mathbf{Z}_4 = [0.6330,\ 2.599,\ 3.633]^T$$

As the components of $\mathbf{Z}$ have stabilized to three significant figures, we take $x_1^* = 0.633$, $x_2^* = 2.60$, and $\lambda_1^* = 3.63$, with

$$z^* = 2x_1^* + x_1^*x_2^* + 3x_2^* = 10.7$$

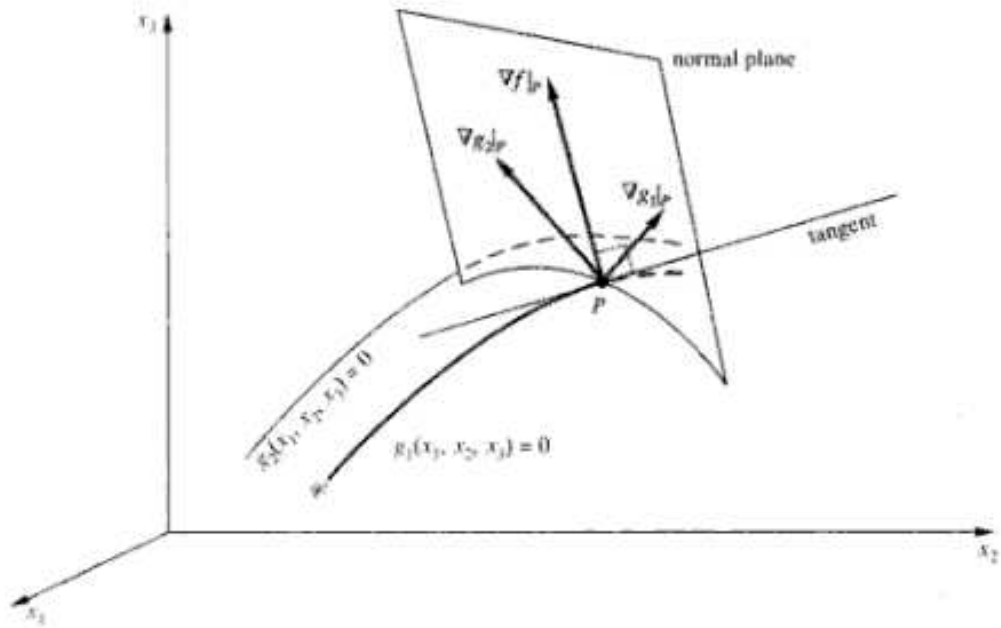

Fig. 12-1

By expressing z as a (cubic) function of x_1 alone, we can easily see that in this particular case the Newton-Raphson method has converged on a local maximum.

12.5 Give a geometrical argument for the method of Lagrange multipliers in three dimensions.

Refer to Fig. 12-1. The problem is to maximize a function $f(x_1, x_2, x_3)$ along the space curve $\mathscr{C}$ in which the two surfaces

$$g_1(x_1, x_2, x_3) = 0 \qquad \text{and} \qquad g_2(x_1, x_2, x_3) = 0$$

intersect. Let P be the point of $\mathscr{C}$ at which the maximum is attained. From Problem 11.7, we know that the gradient of f must have a zero projection on the tangent to $\mathscr{C}$ at P; otherwise a small displacement along the curve would produce an even larger functional value. Thus $\nabla f|_P$ must lie in the normal plane to the curve at P. But then this vector is expressible as a linear combination of the two surface normals at P, $\nabla g_1|_P$ and $\nabla g_2|_P$; that is,

$$\nabla f|_P = \lambda_1 \nabla g_1|_P + \lambda_2 \nabla g_2|_P \qquad \text{or} \qquad \nabla L|_P = \mathbf{0} \tag{1}$$

where $L \equiv f - \lambda_1 g_1 - \lambda_2 g_2$.

The three scalar equations represented by (*1*) are the first three Lagrangian equations (*12.5*); the remaining two Lagrangian equations merely restate the requirement that P actually lie on $\mathscr{C}$.

12.6 Use the penalty function approach to

$$\text{maximize:} \quad z = -4 - 3(1 - x_1)^2 - (1 - x_2)^2$$
$$\text{subject to:} \quad 3x_1 + x_2 = 5$$

Here (*12.7*) becomes

$$\text{maximize:} \quad \hat{z} = -4 - 3(1 - x_1)^2 - (1 - x_2)^2 - p_1(3x_1 + x_2 - 5)^2$$

This unconstrained maximization program in the two variables x_1 and x_2 is sufficiently simple that it may be solved analytically. Setting $\nabla \hat{z} = \mathbf{0}$, we obtain

$$(1 + 3p_1)x_1 + \qquad p_1 x_2 = 1 + 5p_1$$
$$3p_1 x_1 + (1 + p_1)x_2 = 1 + 5p_1$$

Solving these equations for x_1 and x_2 in terms of p_1, we obtain

$$x_1 = x_2 = \frac{1 + 5p_1}{1 + 4p_1} = \frac{(1/p_1) + 5}{(1/p_1) + 4}$$

Since the Hessian matrix

$$\mathbf{H}_{\hat{z}} = \begin{bmatrix} -6 - 18p_1 & -6p_1 \\ -6p_1 & -2 - 2p_1 \end{bmatrix}$$

is negative definite for every positive value of p_1, $\hat{z}$ is a strictly concave function, and its sole stationary point must be a global maximum. Therefore, letting $p_1 \to +\infty$ we obtain the optimal solution to the original program:

$$x_1 \to \frac{5}{4} = x_1^* \qquad x_2 \to \frac{5}{4} = x_2^*$$

with $z^* = -4 - 3(1 - x_1^*)^2 - (1 - x_2^*)^2 = -4.25$.

12.7 Use the penalty function approach to

$$\begin{aligned} &\text{minimize:} \quad z = (x_1 - x_2)^2 + (x_3 - 1)^2 + 1 \\ &\text{subject to:} \quad x_1^5 + x_2^5 + x_3^5 = 16 \end{aligned}$$

Putting this program in standard form, we have

$$\begin{aligned} &\text{maximize:} \quad z = -(x_1 - x_2)^2 - (x_3 - 1)^2 - 1 \\ &\text{subject to:} \quad x_1^5 + x_2^5 + x_3^5 - 16 = 0 \end{aligned} \tag{1}$$

For program (*1*), (*12.7*) becomes

$$\text{maximize:} \quad \hat{z} = -(x_1 - x_2)^2 - (x_3 - 1)^2 - 1 - p_1(x_1^5 + x_2^5 + x_3^5 - 16)^2 \tag{2}$$

Phase 1. We set $p_1 = 0.02$ in (*2*) and consider the program

$$\text{maximize:} \quad \hat{z} = -(x_1 - x_2)^2 - (x_3 - 1)^2 - 1 - 0.02(x_1^5 + x_2^5 + x_3^5 - 16)^2 \tag{3}$$

Arbitrarily selecting $[0, 0, 0]^T$ as our initial vector, and setting $h = 1$, we apply the modified pattern search (Chapter 11) to program (*3*). The result after 78 functional evaluations is $[1, 1, 1]^T$, with

$$f(1, 1, 1) = -1 \qquad \text{and} \qquad g_1(1, 1, 1) = -13$$

Phase 2. Since $g_1(1, 1, 1) = -13 \neq 0$, the constraint in program (*1*) is not satisfied. To improve this situation, we increase p_1 in (*2*) to 0.2 and consider the program

$$\text{maximize:} \quad \hat{z} = -(x_1 - x_2)^2 - (x_3 - 1)^2 - 1 - 0.2(x_1^5 + x_2^5 + x_3^5 - 16)^2 \tag{4}$$

Taking $[1, 1, 1]^T$ from Phase 1 as the initial approximation, we apply the modified pattern search to (*4*), still keeping $h = 1$. The result remains $[1, 1, 1]^T$, indicating that the constraint cannot be satisfied in integers.

Phase 3. Since increasing p_1 did not improve the current solution, we return to program (*3*), reduce h to 0.1, and make a new pattern search, again with $[1, 1, 1]^T$ as initial approximation. The result is $[1.5, 1.5, 1]^T$, with

$$f(1.5, 1.5, 1) = -1 \qquad \text{and} \qquad g_1(1.5, 1.5, 1) = 0.1875$$

Continuing in this manner, we complete Table 12-1. Using the results of Phase 9, we conclude that $x_1^* = 1.496$, $x_2^* = 1.496$, $x_3^* = 1.003$, with $z^* = +1.000$, approximates the optimal solution to the original minimization program.

Table 12-1

Phase	p_1	h	Final Vector X			$f(\mathbf{X})$	$g_1(\mathbf{X})$
			x_1	x_2	x_3		
1	0.02	1	1	1	1	−1	−13
2	0.2	1	1	1	1	−1	−13
3	0.02	0.1	1.5	1.5	1	−1	0.1875
4	0.2	0.1	1.5	1.5	1	−1	0.1875
5	0.02	0.01	1.49	1.5	1	−1.000	−0.0623
6	0.2	0.01	1.49	1.5	1.01	−1.000	−0.0113
7	0.2	0.001	1.496	1.496	1.002	−1.000	−0.0039
8	2	0.001	1.496	1.496	1.003	−1.000	0.0012
9	20	0.001	1.496	1.496	1.003	−1.000	0.0012

By inspection, the exact solution is

$$x_1^* = x_2^* = \left(\frac{15}{2}\right)^{1/5} = 1.4963 \qquad x_3^* = 1$$

with $z^* = 1$. Thus the penalty function approach has yielded a result good to four significant figures.

12.8

$$\begin{aligned} \text{maximize:} \quad & z = -x_1^6 x_2^2 - x_1^4 x_3^2 - 1 \\ \text{subject to:} \quad & x_1 + 2x_2 + 3x_3 - 4 = 0 \\ & x_1 x_3 - 19 = 0 \\ \text{with:} \quad & \text{all variables integral} \end{aligned}$$

The penalty function method is applicable to this integer program, provided that the pattern search starts from an integral first approximation, say $[0, 0, 0]^T$, and employs $h = 1$ throughout. Using it, we generate Table 12-2 and find $x_1^* = 1$, $x_2^* = -27$, $x_3^* = 19$, with $z^* = -1091$.

Table 12-2

Phase	p_1	p_2	h	Final Vector X			$f(\mathbf{X})$	$g_1(\mathbf{X})$	$g_2(\mathbf{X})$
				x_1	x_2	x_3			
1	0.02	0.02	1	4	0	0	−1	0	−19
2	0.02	0.2	1	4	0	0	−1	0	19
3	0.02	2	1	1	−1	12	−146	31	−7
4	0.2	20	1	1	−11	17	−411	26	−2
5	2	200	1	1	−24	19	−938	6	0
6	20	200	1	1	−27	19	−1091	0	0

12.9 Describe how the penalty function approach can be modified to solve program (*12.1*) if nonnegativity conditions are added.

Require the initial approximation to have only nonnegative components. Then restrict exploratory moves to vectors satisfying the nonnegativity conditions. This can best be accomplished by penalizing the objective function whenever the nonnegativity conditions are violated. That is, $f(\mathbf{X})$ is evaluated as a

prohibitively large negative number, perhaps -1×10^{30}, whenever any component of the perturbed vector **X** is negative.

12.10 Solve the following program by use of the Kuhn-Tucker conditions:

$$\begin{aligned} \text{minimize:}\quad & z = x_1^2 + 5x_2^2 + 10x_3^2 - 4x_1x_2 + 6x_1x_3 - 12x_2x_3 - 2x_1 + 10x_2 + 5x_3 \\ \text{subject to:}\quad & x_1 + 2x_2 + x_3 \geq 4 \\ \text{with:}\quad & \text{all variables nonnnegative} \end{aligned}$$

First transforming into system (*12.3*) and then introducing squared slack variables, we obtain

$$\begin{aligned} \text{maximize:}\quad & z = -x_1^2 - 5x_2^2 - 10x_3^2 + 4x_1x_2 - 6x_1x_3 + 12x_2x_3 + 2x_1 - 10x_2 - 5x_3 \\ \text{subject to:}\quad & -x_1 - 2x_2 - x_3 + 4 + x_4^2 = 0 \\ & -x_1 + x_5^2 = 0 \\ & -x_2 + x_6^2 = 0 \\ & -x_3 + x_7^2 = 0 \end{aligned}$$

For this program, the Lagrangian function is

$$\begin{aligned} L = {} & -x_1^2 - 5x_2^2 - 10x_3^2 + 4x_1x_2 - 6x_1x_3 + 12x_2x_3 + 2x_1 - 10x_2 - 5x_3 \\ & -\lambda_1(-x_1 - 2x_2 - x_3 + 4 + x_4^2) - \lambda_2(-x_1 + x_5^2) - \lambda_3(-x_2 + x_6^2) - \lambda_4(-x_3 + x_7^2) \end{aligned}$$

Taking the derivatives indicated in (*12.9*) and (*12.10*), we have

$$\frac{\partial L}{\partial x_1} = -2x_1 + 4x_2 - 6x_3 + 2 + \lambda_1 + \lambda_2 = 0 \tag{1}$$

$$\frac{\partial L}{\partial x_2} = -10x_2 + 4x_1 + 12x_3 - 10 + 2\lambda_1 + \lambda_3 = 0 \tag{2}$$

$$\frac{\partial L}{\partial x_3} = -20x_3 - 6x_1 + 12x_2 - 5 + \lambda_1 + \lambda_4 = 0 \tag{3}$$

$$\frac{\partial L}{\partial x_4} = -2\lambda_1 x_4 = 0 \tag{4}$$

$$\frac{\partial L}{\partial x_5} = -2\lambda_2 x_5 = 0 \tag{5}$$

$$\frac{\partial L}{\partial x_6} = -2\lambda_3 x_6 = 0 \tag{6}$$

$$\frac{\partial L}{\partial x_7} = -2\lambda_4 x_7 = 0 \tag{7}$$

$$\frac{\partial L}{\partial \lambda_1} = x_1 + 2x_2 + x_3 - x_4^2 - 4 = 0 \tag{8}$$

$$\frac{\partial L}{\partial \lambda_2} = x_1 - x_5^2 = 0 \tag{9}$$

$$\frac{\partial L}{\partial \lambda_3} = x_2 - x_6^2 = 0 \tag{10}$$

$$\frac{\partial L}{\partial \lambda_4} = x_3 - x_7^2 = 0 \tag{11}$$

These equations can be simplified. Set

$$s_1 \equiv x_4^2 \tag{12}$$

Equations (4) through (7) imply respectively that either λ_1 or x_4, either λ_2 or x_5, either λ_3 or x_6, and either λ_4, or x_7, equals zero. But, by (9) through (12), x_4, x_5, x_6, and x_7 are zero if and only if s_1, x_1, x_2, and x_3 are respectively zero. Thus, (4) through (7) and (9) through (12) are equivalent to the system

$$\begin{aligned} \lambda_1 s_1 &= 0 \\ \lambda_2 x_1 &= 0 \\ \lambda_3 x_2 &= 0 \\ \lambda_4 x_3 &= 0 \end{aligned} \tag{13}$$

There are 16 solutions to this system.

One of these solutions is $s_1 = \lambda_2 = \lambda_3 = x_3 = 0$. Substituting these values into (8), (1), (2), and (3), and simplifying, we get the linear system

$$\begin{aligned} x_1 + 2x_2 \qquad\qquad &= 4 \\ -2x_1 + 4x_2 + \lambda_1 \qquad &= -2 \\ 4x_1 - 10x_2 + 2\lambda_1 \qquad &= 10 \\ -6x_1 + 12x_2 + \lambda_1 + \lambda_4 &= 5 \end{aligned}$$

which has the unique solution $x_1 = 2.941$, $x_2 = 0.5294$, $\lambda_1 = 1.764$, and $\lambda_4 = 14.53$. These results are listed in row 10 of Table 12-3. (Boldface entries in the table correspond to solutions of (13).)

A second solution of (13) is $s_1 = x_1 = x_2 = x_3 = 0$. Substituting these values into (8), (1), (2), and (3), and simplifying, we get the linear system

$$\begin{aligned} 0 &= 4 \\ \lambda_1 + \lambda_2 \qquad &= -2 \\ 2\lambda_1 \qquad + \lambda_3 \qquad &= 10 \\ \lambda_1 \qquad\qquad + \lambda_4 &= 5 \end{aligned}$$

which has no solution, as indicated in row 16 of Table 12-3. The other 14 possibilities are handled similarly, and the results are also listed in Table 12-3.

The only row in Table 12-3 having nonnegative entries for all variables, as required by the Kuhn-Tucker conditions, is row 10. Now, since $z = f(\mathbf{X})$ and

$$g_1(\mathbf{X}) = -x_1 - 2x_2 - x_3 + 4$$

have continuous first partial derivatives, *one* of the solutions to the Kuhn-Tucker conditions must reflect the optimal solution of the maximization program. But the Kuhn-Tucker conditions here have a unique solution! Consequently, $x_1^* = 2.941$, $x_2^* = 0.5294$, $x_3^* = 0$, giving $z^* = 3.235$ for the original minimization program.

12.11 Transform the following program into system (12.3):

$$\begin{aligned} \text{minimize:}\quad & z = 12x_1^2 + 2.8x_2^2 + 55.2x_3^2 - 5.6x_1x_2 - 5.6x_2x_1 \\ & \quad + 23x_1x_3 + 23x_3x_1 - 12x_2x_3 - 12x_3x_2 \\ \text{subject to:}\quad & x_1 + x_2 + x_3 = 10\,000 \qquad (1) \\ & 9x_1 + 7x_2 + 10x_3 \geq 80\,000 \qquad (2) \\ \text{with:}\quad & \text{all variables nonnegative} \end{aligned}$$

Table 12-3

λ_1	λ_2	λ_3	λ_4	x_1	x_2	x_3	s_1
0	**0**	**0**	**0**	11.5	−3	−5.5	−4
0	**0**	**0**	11	−5	−3	**0**	−15
0	**0**	6	**0**	17.5	**0**	−5.5	−4
0	**0**	6	11	1	**0**	**0**	−3
0	−1.643	**0**	**0**	**0**	−4.643	−3.036	−16.32
0	2	**0**	17	**0**	−1	**0**	−2
0	−3.5	13	**0**	**0**	**0**	−0.25	−4.25
0	−2	10	5	**0**	**0**	**0**	−4
0.3809	**0**	**0**	**0**	14.36	−2.238	−5.881	**0**
1.764	**0**	**0**	14.53	2.941	0.5294	**0**	**0**
−3.2	**0**	18.8	**0**	6.3	**0**	−2.3	**0**
6	**0**	−8	11	4	**0**	**0**	**0**
6.623	−8.738	**0**	**0**	**0**	1.507	0.9855	**0**
15	−25	**0**	−34	**0**	2	**0**	**0**
85	−63	−208	**0**	**0**	**0**	4	**0**
...	...	...	...	**0**	**0**	**0**	**0**

Multiplying the objective function by -1, we obtain:

$$\begin{aligned} \text{maximize:} \quad z = &-12x_1^2 - 2.8x_2^2 - 55.2x_3^2 + 5.6x_1x_2 \\ &+ 5.6x_2x_1 - 23x_1x_3 - 23x_3x_1 + 12x_2x_3 + 12x_3x_2 \end{aligned} \tag{3}$$

The equality constraint is equivalent to the *two* inequalities

$$x_1 + x_2 + x_3 \le 10\,000 \qquad \text{and} \qquad -x_1 - x_2 - x_3 \le -10\,000$$

Hence the complete set of constraints can be given as

$$\begin{aligned} x_1 + x_2 + x_3 - 10\,000 &\le 0 \\ -x_1 - x_2 - x_3 + 10\,000 &\le 0 \\ -9x_1 - 7x_2 - 10x_3 + 80\,000 &\le 0 \end{aligned} \tag{4}$$

Expressions (*3*) and (*4*), augmented by nonnegativity conditions on the variables, represent standard form for this problem.

The problem now can be solved by utilizing the Kuhn-Tucker conditions (see Problem 12.33). Another solution procedure is given in Problem 12.12.

12.12 How may the penalty function be used to solve Problem 12.11?

The second constraint, (*2*) of Problem 12.11, can be converted into an equality by subtracting a surplus variable, x_4, from its left-hand side. Then the system composed of (*3*), (*1*), and (*2*) can be solved by the penalty function approach as modified in Problem 12.9.

12.13 Use the method of feasible directions to

$$\begin{aligned} \text{maximize:} \quad & z = x_1 + x_2 \\ \text{subject to:} \quad & x_2x_1 - 2x_2 \le 3 \\ & 3x_1 + 2x_2 \le 24 \\ \text{with:} \quad & \text{all variables nonnnegative} \end{aligned}$$

Put into standard form (*12.2*), the program is

$$\begin{aligned} \text{maximize:} \quad & z = x_1 + x_2 \\ \text{subject to:} \quad & x_2x_1 - 2x_2 - 3 \le 0 \\ & 3x_1 + 2x_2 - 24 \le 0 \\ & -x_1 \le 0 \\ & -x_2 \le 0 \end{aligned} \tag{1}$$

Here, $f(\mathbf{X}) = x_1 + x_2$, $g_1(\mathbf{X}) = x_2x_1 - 2x_2 - 3$, $g_2(\mathbf{X}) = 3x_1 + 2x_2 - 24$, $g_3(\mathbf{X}) = -x_1$, and $g_4(\mathbf{X}) = -x_2$;

$$\frac{\partial f}{\partial x_1} = 1 \qquad \frac{\partial f}{\partial x_2} = 1$$

$$\frac{\partial g_1}{\partial x_1} = x_2 \qquad \frac{\partial g_1}{\partial x_2} = x_1 - 2$$

$$\frac{\partial g_2}{\partial x_1} = 3 \qquad \frac{\partial g_2}{\partial x_2} = 2$$

$$\frac{\partial g_3}{\partial x_1} = -1 \qquad \frac{\partial g_3}{\partial x_2} = 0$$

$$\frac{\partial g_4}{\partial x_1} = 0 \qquad \frac{\partial g_4}{\partial x_2} = -1$$

Furthermore, $g_1(\mathbf{X})$ is nonlinear, while $g_2(\mathbf{X})$, $g_3(\mathbf{X})$, and $g_4(\mathbf{X})$ are all linear; therefore, $k_1 = 1$ and $k_2 = k_3 = k_4 = 0$ in program (*12.12*).

STEP 1: We arbitrarily initialize $\mathbf{B}$ as $[1, 1]^T$, which is feasible.

STEP 2: With this $\mathbf{B}$, program (*12.12*) becomes

$$
\begin{aligned}
\text{maximize:}\quad & z = d_3 \\
\text{subject to:}\quad & -d_1 - d_2 + d_3 \le 0 \\
& d_1 - d_2 + d_3 \le 4 \\
& 3d_1 + 2d_2 \le 19 \\
& -d_1 \le 1 \\
& -d_2 \le 1 \\
\text{with:}\quad & d_1 \le 1 \\
& d_2 \le 1 \\
& d_3 \le 1
\end{aligned}
$$

Its solution is $d_1 = 1$, $d_2 = 0$, $d_3 = 1$.

STEP 3: $d_3 = 1 \neq 0$.

STEP 4: $\mathbf{D} = [1, 0]^T$, hence

$$f\left(\begin{bmatrix}1\\1\end{bmatrix} + \lambda\begin{bmatrix}1\\0\end{bmatrix}\right) = f(1+\lambda, 1) = 2 + \lambda$$

which becomes arbitrarily large as λ tends to ∞. To keep $[1+\lambda, 1]^T$ feasible, however, λ can be no greater than 4 if the first constraint in program (*1*) is to be satisfied, and no greater than 19/3 if the second constraint is to be satisfied. Thus, $\lambda^* = 4$.

STEP 5:

$$\mathbf{B} = \begin{bmatrix}1\\1\end{bmatrix} + 4\begin{bmatrix}1\\0\end{bmatrix} = \begin{bmatrix}5\\1\end{bmatrix}$$

STEP 2: With this updated **B**, program (*12.12*) becomes

$$
\begin{aligned}
\text{maximize:}\quad & z = d_3 \\
\text{subject to:}\quad & -d_1 - d_2 + d_3 \le 0 \\
& d_1 + 3d_2 + d_3 \le 0 \\
& 3d_1 + 2d_2 \le 7 \\
& -d_1 \le 5 \\
& -d_2 \le 1 \\
\text{with:}\quad & d_1 \le 1 \\
& d_2 \le 1 \\
& d_3 \le 1
\end{aligned}
$$

Its solution is $d_1 = 1$, $d_2 = -1/2$, $d_3 = 1/2$.

STEP 3: $d_3 = 1/2 \neq 0$.

STEP 4: $\mathbf{D} = [1, -\frac{1}{2}]^T$, so

$$f\left(\begin{bmatrix}5\\1\end{bmatrix} + \lambda\begin{bmatrix}1\\-\frac{1}{2}\end{bmatrix}\right) = f(5+\lambda, 1-\tfrac{1}{2}\lambda) = 6 + \tfrac{1}{2}\lambda$$

which becomes arbitrarily large as λ tends to ∞. To keep $[5+\lambda, 1-\frac{1}{2}\lambda]^T$ feasible, however, λ can be no greater than 3.5 if the second constraint in program (*1*) is to be satisfied, and no greater than 2 if the nonnegativity constraint on x_2 is to be satisfied. (The other two constraints in program (*1*) are satisfied for any nonnegative choice of λ.) Thus, $\lambda^* = 2$.

STEP 5:

$$\mathbf{B} = \begin{bmatrix}5\\1\end{bmatrix} + 2\begin{bmatrix}1\\-\frac{1}{2}\end{bmatrix} = \begin{bmatrix}7\\0\end{bmatrix}$$

Table 12-4

x_1	x_2	d_1	d_2	d_3	λ^*
1	1	1	0	1	4
5	1	1	$-\frac{1}{2}$	$\frac{1}{2}$	2
7	0	1	0	1	1
8	0	$-\frac{2}{3}$	1	$\frac{1}{3}$	0.531 373
7.645 75	0.531 373	0	0	0	...

Continuing in this manner, we complete Table 12-4. It follows that $x_1^* = 7.645\,75$, $x_2^* = 0.531\,373$, with

$$z^* = f(x_1^*, x_2^*) = 7.645\,75 + 0.531\,373 = 8.177\,12$$

12.14 Show that the solution found in Problem 12.13 is not optimal.

The second constraint of the original program may be written as

$$z \leq 12 - \frac{x_1}{2}$$

which shows that if $x_1 > 0$, then $z < 12$. On the other hand, if $x_1 = 0$, then $z = x_2 \leq 12$. It follows that the global maximum is $z^* = 12$, assumed at $x_1^* = 0$, $x_2^* = 12$. The solution obtained in Problem 12.13 is only a locally constrained maximum; the method of feasible directions would have located the global maximum had **B** initially been chosen closer to $[0, 12]^T$.

12.15 Interpret graphically the method of feasible directions.

The method of feasible directions produces a direction **D** along which one can move from **B**, the current best approximation to $\mathbf{X}^*$, so as to achieve a better value of the objective function. Such a move is possible

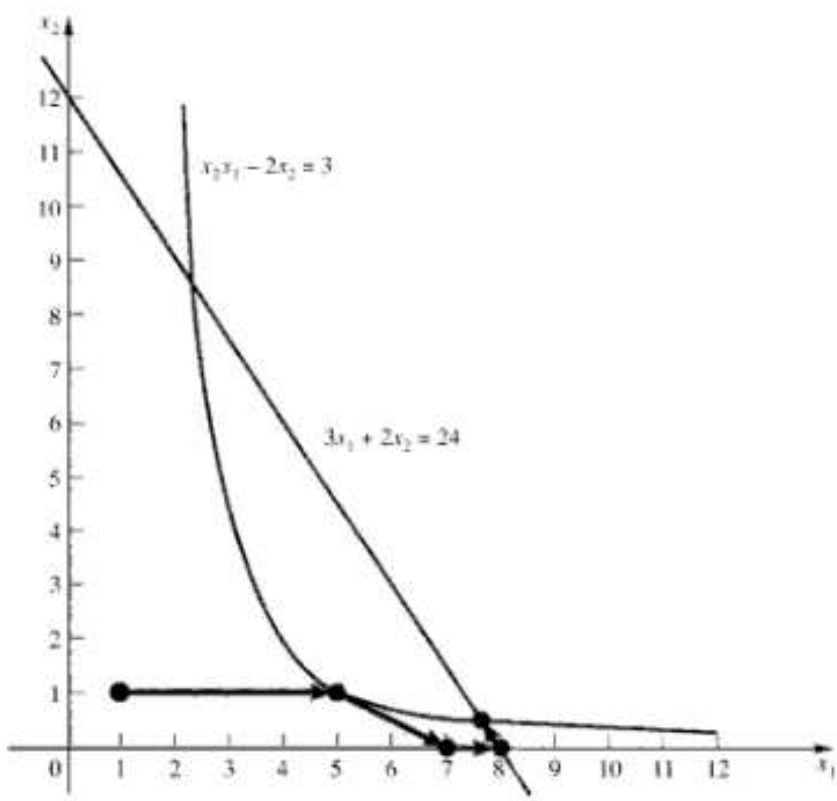

Fig. 12-2

only if $d_{n+1} \neq 0$, and then λ^* represents the maximal step size that can be taken. Figure 12-2 illustrates the solution procedure for the calculations in Problem 12.13.

Supplementary Problems

Put programs 12.16 through 12.20 in standard form.

12.16

$$\begin{aligned} \text{maximize:} \quad & z = x_1^4 e^{-0.01(x_1 x_2)^2} \\ \text{subject to:} \quad & 2x_1^2 + x_2^2 = 10 \end{aligned}$$

12.17

$$\begin{aligned} \text{minimize:} \quad & z = (x_1 - 1)^2 + x_2^2 \\ \text{subject to:} \quad & x_1^2 + x_2^2 = 4 \end{aligned}$$

12.18

$$\begin{aligned} \text{maximize:} \quad & z = 6x_1 - 2x_1^2 + 2x_1x_2 - 2x_2^2 \\ \text{subject to:} \quad & x_1 + x_2 \leq 2 \\ \text{with:} \quad & \text{all variables nonnegative} \end{aligned}$$

12.19

$$\begin{aligned} \text{minimize:} \quad & z = 24x_1^2 + 14x_2^2 + 46x_3^2 - 28x_1x_2 - 24x_1x_3 + 34x_2x_3 \\ \text{subject to:} \quad & 11x_1 + 9x_2 + 12x_3 \geq 1000 \\ & x_2 + \quad x_3 = \quad 40 \\ \text{with:} \quad & \text{all variables nonnegative} \end{aligned}$$

12.20

$$\begin{aligned} \text{maximize:} \quad & z = 3x_1x_3 + 4x_2x_3 \\ \text{subject to:} \quad & x_2^2 + x_3^2 = 4 \\ & x_1x_3 = 3 \\ \text{with:} \quad & \text{all variables nonnegative} \end{aligned}$$

Solve Problems 12.21 through 12.23 analytically by Lagrange multipliers and then numerically by either the Newton-Raphson method or the penalty function approach.

12.21 Problem 12.17.

12.22

$$\begin{aligned} \text{minimize:} \quad & z = x_1x_2 + x_3 \\ \text{subject to:} \quad & x_1^2 + x_2^2 + x_3^2 = 1 \end{aligned}$$

12.23

$$\begin{aligned} \text{maximize:} \quad & z = x_1^2 + x_2x_3 \\ \text{subject to:} \quad & 4x_1^2 + \quad x_2^2 = 16 \\ & 2x_2 + 3x_3 = 25 \end{aligned}$$

12.24 Find the point on the parabola $y^2 = 4x$ that is closest to the point $(1, 0)$.

12.25 Use Lagrange multipliers to solve Problem 12.20 without the nonnegativity conditions. Based on the result, solve the problem with the nonnegativity conditions.

12.26 Solve Problem 12.16.

12.27

$$\begin{aligned} \text{minimize:} \quad & z = x_1^2 + x_2^2 + x_3^2 \\ \text{subject to:} \quad & x_1 x_2 x_3 = 3 \\ & x_1 + x_2 - x_3 = 3 \end{aligned}$$

12.28 Solve Problem 12.27 with the additional constraint that all variables be integral.

12.29

$$\begin{aligned} \text{maximize:} \quad & z = x_1^2 + 2x_2^2 + x_3^2 + x_1 x_2 + x_1 x_3 \\ \text{subject to:} \quad & x_1^2 + x_2^2 + x_3^2 = 25 \\ & 8x_1 + 14x_2 + 7x_3 = 56 \\ \text{with:} \quad & \text{all variables nonnegative} \end{aligned}$$

12.30

$$\begin{aligned} \text{minimize:} \quad & z = x_1^6 x_2^2 + x_1^4 x_3^2 + 1 \\ \text{subject to:} \quad & x_1 + 2x_2 + 3x_3 = 4 \\ & x_1 x_3 = 19 \end{aligned}$$

12.31 Solve Problem 12.18.

12.32 Solve Problem 12.19.

12.33 Use the Kuhn-Tucker conditions to solve the program given in Problem 12.11.

Solve Problems 12.34 and 12.35 by the penalty function approach.

12.34

$$\begin{aligned} \text{minimize:} \quad & z = (x_1 - 2)^2 + (x_2 - 1)^2 \\ \text{subject to:} \quad & x_1 - 2x_2 = -1 \\ & x_1^2 + 4x_2^2 \le 4 \end{aligned}$$

12.35

$$\begin{aligned} \text{maximize:} \quad & z = \ln(1 + x_1) + 2\ln(1 + x_2) \\ \text{subject to:} \quad & x_1 + x_2 \le 2 \\ \text{with:} \quad & \text{all variables nonnegative} \end{aligned}$$

(*Hint*: Simplify the problem by maximizing e^z and establishing beforehand that the constraint must hold with equality.)

Use the method of feasible directions to solve Problems 12.36 and 12.37.

12.36

$$\begin{aligned} \text{minimize:} \quad & z = (x_1 - 2)^2 + (x_2 - 2)^2 \\ \text{subject to:} \quad & x_1 + 2x_2 \le 3 \\ & 8x_1 + 5x_2 \ge 10 \\ \text{with:} \quad & x_1 \text{ and } x_2 \text{ nonnegative} \end{aligned}$$

12.37

$$\begin{aligned} \text{maximize:} \quad & z = x_1 + 3x_2 \\ \text{subject to:} \quad & x_1 x_2 \ge 3 \\ & x_1^2 + x_2^2 \le 9 \\ \text{with:} \quad & x_1 \text{ and } x_2 \text{ nonnegative} \end{aligned}$$

Chapter 13

Network Analysis

NETWORKS

A *network* is a set of points, called *nodes*, and a set of curves, called *branches* (or *arcs* or *links*), that connect certain pairs of nodes. Only those networks will be considered here in which a given pair of nodes is joined by at most one branch. We denote nodes by uppercase letters and branches by the nodes they connect.

Example 13.1 Figure 13-1 is a network consisting of five nodes, labeled A through E, and six branches defined by the curves AB, AC, AD, BC, CD, and DE.

A branch is *oriented* if it has a direction associated with it. Schematically, directions are indicated by arrows. The arrow on branch AB in Fig. 13-1 signifies that this branch is directed from A to B. Any movement along this branch must originate at A and terminate at B; movement from B to A is not permitted.

Two branches are *connected* if they have a common node. In Fig. 13-1, branches AB and AC are connected, but branches AB and CD are not connected. A *path* is a sequence of connected branches such that in the alternation of nodes and branches no node is repeated. A network is *connected* if for each pair of nodes in the network there exists at least one path joining the pair. If the path is unique for each pair of nodes, the connected network is called a *tree*. Equivalently, a tree is a connected network having one more node than branch.

Example 13.2 In Fig. 13-1, $\{ED, DA, AB\}$ is a path, but the sequence of connected branches $\{CA, AD, DC, CB\}$ is not a path, as node C occurs in it twice. The network is connected, and remains connected even if branches DA and AB are deleted. If, however, DE were deleted, the network would not be connected, since there would not be a path linking D with E. Because D and C are joined by three paths, the network is not a tree.

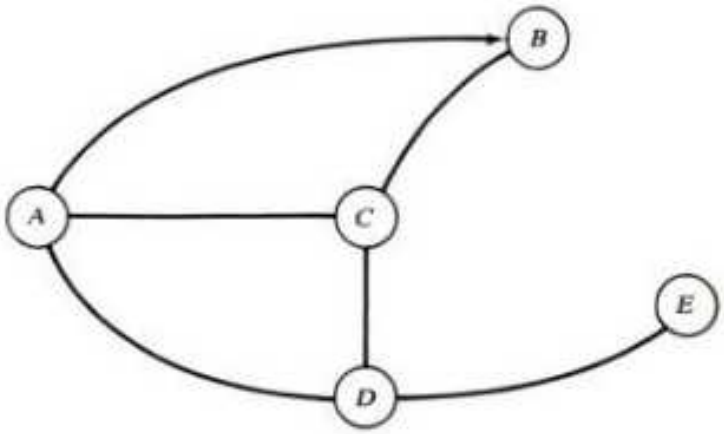

Fig. 13-1

MINIMUM-SPAN PROBLEMS

A minimum-span problem involves a set of nodes and a set of *proposed* branches, none of them oriented. Each proposed branch has a nonnegative cost associated with it. The objective is to construct a connected network that contains all the nodes and is such that the sum of the costs associated with those branches actually used is a minimum. We shall suppose that there are enough proposed branches to ensure the existence of a solution.

It is not hard to see that a minimum-span problem is always solved by a tree. (If two nodes in a connected network are joined by two paths, one of these paths must contain a branch whose removal does not disconnect the network. Removing such a branch can only lower the total cost.) A minimal spanning tree may be found by initially selecting any one node and determining which branch incident on the selected node has the smallest cost. This branch is accepted as part of the final network. The network is then completed iteratively. At each stage of the iterative process, attention is focused on those nodes already linked together. All branches linking these nodes to unconnected nodes are considered, and the cheapest such branch identified. Ties are broken arbitrarily. This branch is accepted as part of the final network. The iterative process terminates when all nodes have been linked. (See Problems 13.1 and 13.2.)

If the costs are all distinct (this can always be brought about by infinitesimal changes), it can be proved that the minimal spanning tree is unique and is produced by the above algorithm for any choice of the starting node.

SHORTEST-ROUTE PROBLEMS

A shortest-route problem involves a connected network having a nonnegative cost associated with each branch. One node is designated as the *source*, and another node is designated as the *sink*. (These terms do not here imply an orientation of the branches of the network; they merely suggest the direction in which the solution algorithm will be applied.) The objective is to determine a path joining the source and the sink such that the sum of the costs associated with the branches in the path is a minimum.

Cheapest-path problems are solved by the following algorithm, in the application of which all ties are to be broken arbitrarily.

STEP 1: Construct a master list by tabulating under each node, in ascending order of cost, the branches incident on it. Each branch under a given node is written with that node as its first node. Omit from the list any branch having the source as its second node or having the sink as its first node.

STEP 2: Star the source and assign it the value 0. Locate the cheapest branch incident on the source and circle it. Star the second node of this branch and assign this node a value equal to the cost of the branch. Delete from the master list all other branches that have the newly starred node as second node.

STEP 3: If the newly starred node is the sink, go to Step 5. If not, go to Step 4.

STEP 4: Consider all starred nodes having uncircled branches under them in the current master list. For each one, add the value assigned to the node to the cost of the cheapest uncircled branch under it. Denote the smallest of these sums as M, and circle that branch whose cost contributed to M. Star the second node of this branch and assign it the value M. Delete from the master list all other branches having this newly starred node as second node. Go to Step 3.

STEP 5: z^* is the value assigned to the sink. A minimum-cost path is obtained recursively, beginning with the sink, by including in the path each circled branch whose second node belongs to the path.

(See Problems 13.3 and 13.4.) From the operation of Step 4, we can see that the set of circled branches produced by the algorithm constitutes a subtree of the original network, having the property that the unique distance (cost) in the subtree between the source and another node is equal to the shortest

distance between these two nodes in the original network. In general, however, the subtree will not span the network.

MAXIMAL-FLOW PROBLEMS

The objective in a maximal-flow problem is to develop a shipping schedule that maximizes the amount of material sent between two points. The point of origin is called the *source*; the destination is called the *sink*. Various shipping lanes exist which link the source and sink directly or via intermediate locations called *junctions*. It is assumed that junctions cannot store material; that is, any material arriving at a junction is shipped immediately to another location.

A maximal-flow problem can be modeled by a network. The source, sink, and junctions are represented by nodes, while the branches represent the conduits through which material is transported. Associated with each node N and each branch NM emanating from N is a nonnegative number, or *capacity*, representing the maximum amount of material that can be shipped through NM from N.

Example 13.3 Figure 13-2 is a network having A as the source, D as the sink, and B and C as junctions. The capacities of each branch for flows in the two directions are indicated near the ends of the branch. Note that 7 units can be shipped from A to C along AC, but 0 units can be shipped in the opposite direction; this asymmetry allows us, if we wish, to define an orientation of AC. In contrast, flows along BC can move in either direction, with a capacity of 5 units either way.

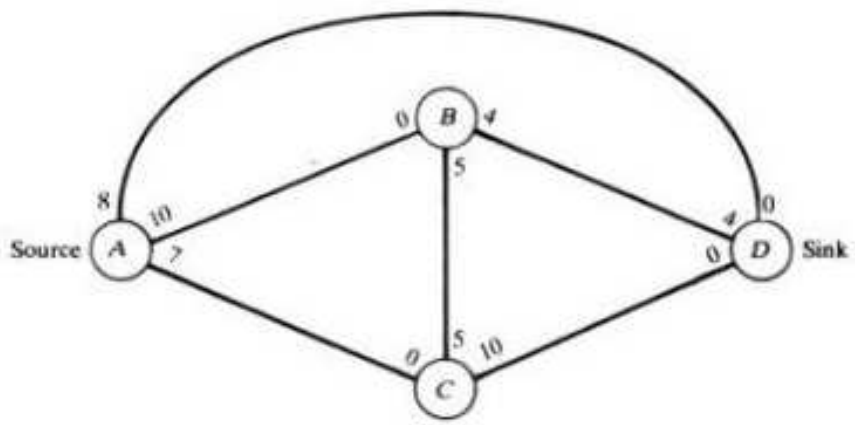

Fig. 13-2

Maximal-flow problems are solved by the following algorithm:

STEP 1: Find a path from source to sink that can accommodate a positive flow of material. If none exists, go to Step 5.

STEP 2: Determine the maximum flow that can be shipped along this path and denote it by k.

STEP 3: Decrease the direct capacity (i.e., the capacity in the direction of flow of the k units) of each branch of this path by k and *increase* the reverse capacity by k. Add k units to the amount delivered to the sink.

STEP 4: Go to Step 1.

STEP 5: The maximal flow is the amount of material delivered to the sink. The optimal shipping schedule is determined by comparing the original network with the final network. Any reduction in capacity signifies a shipment.

(See Problems 13.6 and 13.7.)

FINDING A POSITIVE-FLOW PATH

The difficult aspect of the maximal-flow algorithm is Step 1—identifying a path from source to sink with positive flow capacity. To discover such a path, first connect to the source all nodes that can be reached by a single branch having positive flow capacity in the forward direction (the direction out of the source). Connect these nodes to all *new* nodes that can be reached by single branches having positive forward capacities. Continue this process until either the sink is reached—in which case an appropriate path has been identified—or no new nodes can be reached from existing ones and the sink has not been reached—in which case no appropriate path exists. (See Problem 13.5.)

Solved Problems

13.1 Solve the minimum-span problem for the network given in Fig. 13-3. The numbers on the branches represent the costs of including the branches in the final network.

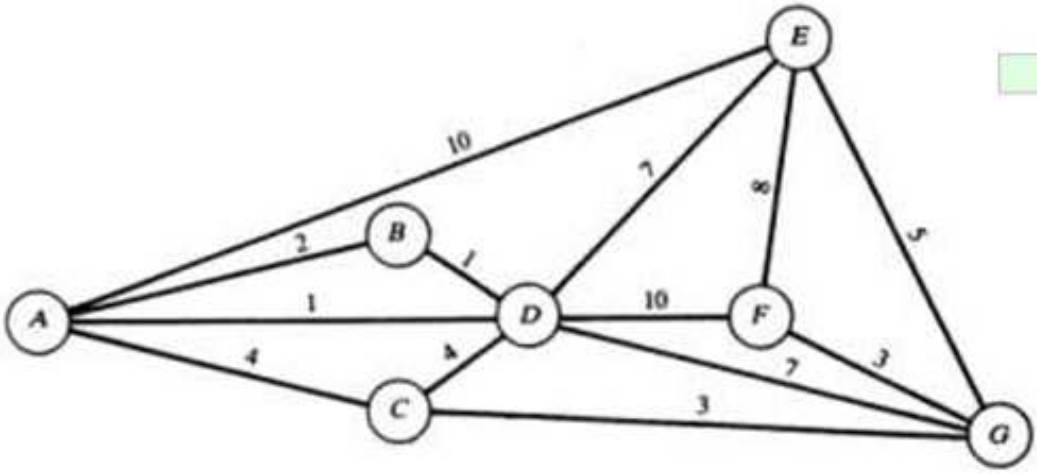

Fig. 13-3

We arbitrarily choose A as our starting node and consider all branches incident on it; they are AE, AB, AD, and AC, with costs 10, 2, 1, and 4, respectively. Since AD is the cheapest, we add this branch to the solution, as shown in Fig. 13-4(a). Nodes A and D are now connected.

We next consider all branches incident on either A or D that connect to other nodes. Such branches are AE, AB, AC, DB, DE, DF, DG, and DC, with costs 10, 2, 4, 1, 7, 10, 7, and 4, respectively. Since DB is the cheapest to include, we adjoin it to Fig. 13-4(a) and obtain Fig. 13-4(b). The connected nodes are now A, B, and D.

We next consider all branches incident on A, B, or D that connect to other nodes. These are AE, AC, DE, DF, DG, and DC, with costs 10, 4, 7, 10, 7, and 4. The cheapest branch of interest is either AC or DC. We arbitrarily select DC and adjoin it to Fig. 13-4(b) to obtain Fig. 13-4(c).

Continuing in this manner, we obtain sequentially Figs. 13-4(d) through 13-4(f). Figure 13-4(f) contains all the nodes; hence it is a minimal-span network. The minimum cost for connecting the network is

$$z^* = 1 + 1 + 4 + 3 + 3 + 5 = 17$$

13.2 The National Park Service plans to develop a wilderness area for tourism. Four locations in the area are designated for automobile access. These sites, and the distances (in miles) between them, are listed in Table 13-1. To inflict the least harm on the environment, the Park Service wants to minimize the miles of roadway required to provide the desired accessibility. Determine how roads should be built to achieve this objective.

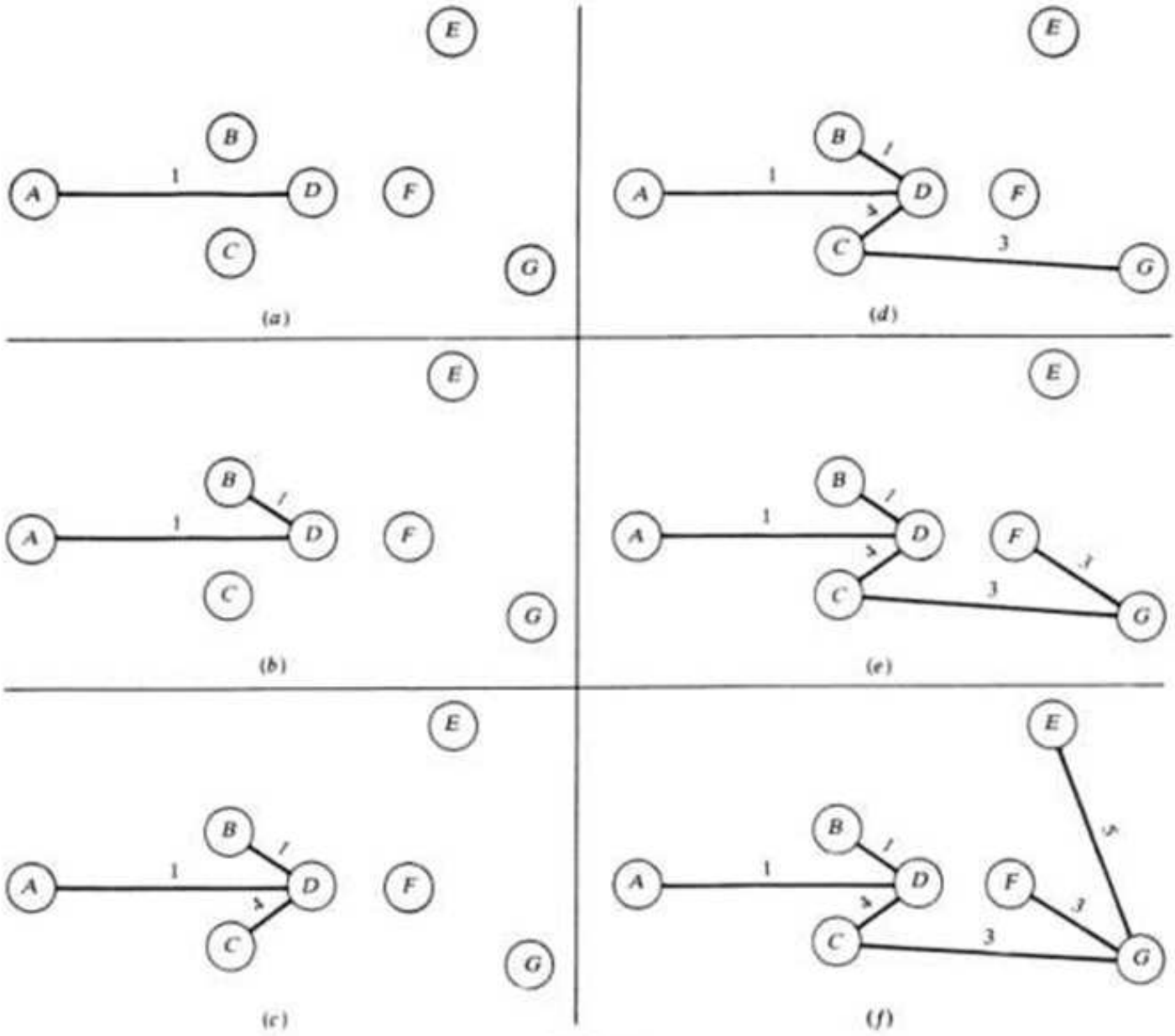

Fig. 13-4

Table 13-1

	Park Entrance	Wild Falls	Majestic Rock	Sunset Point	The Meadow
Park Entrance	···	7.1	19.5	19.1	25.7
Wild Falls	7.1	···	8.3	16.2	13.2
Majestic Rock	19.5	8.3	···	18.1	5.2
Sunset Point	19.1	16.2	18.1	···	17.2
The Meadow	25.7	13.2	5.2	17.2	···

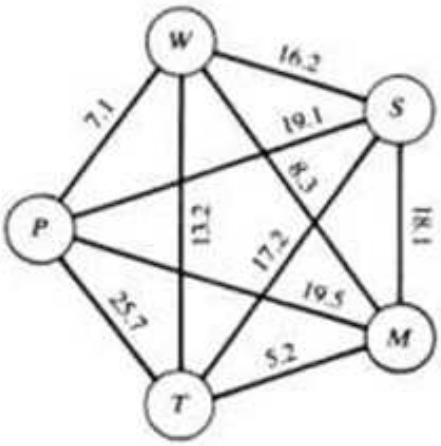

Fig. 13-5

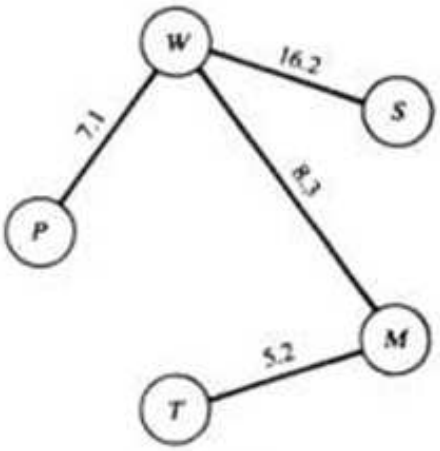

Fig. 13-6

This is a minimum-span problem. The nodes are the four locations to be developed and the park entrance, while the proposed branches are the possible roadways linking the sites. The costs are the mileages. The complete network is shown in Fig. 13-5, where each site is represented by the first letter of its name.

We arbitrarily select Park Entrance as the initial node. The costs of the branches incident on this node are listed in the first row of Table 13-1. Since the lowest cost is 7.1, we add the branch from Park Entrance to Wild Falls to the network.

We next consider all branches joining either Park Entrance or Wild Falls to a new site. These are the branches from Park Entrance to Majestic Rock, Sunset Point, and The Meadow, as well as those from Wild Falls to the same three sites. Of these, the cheapest branch is the one from Wild Falls to Majestic Rock; so we adjoin it to the network.

We next consider all branches to either Sunset Point or The Meadow from either Park Entrance, Wild Falls, or Majestic Rock. Of these, the branch from Majestic Rock to The Meadow has the smallest cost; so it too is added to the network.

At this stage, the only unconnected site is Sunset Point. The cheapest branch linking Sunset Point to any other site is the one from Wild Falls. Adjoining this branch to the network, we arrive at Fig. 13-6, having a minimal cost of

$$z^* = 7.1 + 8.3 + 5.2 + 16.2 = 36.8 \text{ mi}$$

13.3 An individual who lives in Ridgewood, New Jersey, and works in Whippany, New Jersey, seeks a car route that will minimize the morning driving time. This person has recorded driving times (in minutes) along major highways between different intermediate cities; these data are shown in Table 13-2. A blank entry signifies that no major highway directly links the corresponding points. Determine the best commuting route for this individual.

Table 13-2

	Ridgewood	Clifton	Orange	Troy Hills	Parsippany	Whippany
Ridgewood	...	18	...	32	...	...
Clifton	18	...	12	28	...	...
Orange	...	12	...	17	...	32
Troy Hills	32	28	17	...	4	17
Parsippany	...	...	...	4	...	11
Whippany	...	...	32	17	11	...

This situation may be modeled as a shortest-route problem. The nodes are the cities, the branches are the connecting highways, and the costs associated with the branches are the travel times. The source is Ridgewood, and the sink is Whippany.

STEP 1: The master list is shown in Fig. 13-7(*a*), with each city represented by the first letter in its name. Branches *CR* and *TR* are absent under *C* and *T*, respectively; these appear, as *RC* and *RT*, under the source only. Similarly, no branches are listed with the sink as first node.

STEP 2: We star the source node, *R*, and assign it the value 0. The cheapest branch leaving *R* is *RC*; so we star *C* and assign it the value 18, the cost of *RC*. We circle branch *RC* and then delete from Fig. 13-7(*a*) all other branches whose second node is *C*, i.e., *OC* and *TC*. The new master list is Fig. 13-7(*b*).

R	C	O	T	P	W
RC 18	CO 12	OC 12	TP 4	PT 4	
RT 32	CT 28	OT 17	TW 17	PW 11	
		OW 32	TO 17		
			TC 28		

(*a*)

R* (0)	C* (18)	O	T	P	W
RC 18	CO 12	OT 17	TP 4	PT 4	
RT 32	CT 28	OW 32	TW 17	PW 11	
			TO 17		

(*b*)

R* (0)	C* (18)	O* (30)	T	P	W
RC 18	CO 12	OT 17	TP 4	PT 4	
RT 32	CT 28	OW 32	TW 17	PW 11	

(*c*)

R* (0)	C* (18)	O* (30)	T* (32)	P	W
RC 18	CO 12	OW 32	TP 4	PW 11	
RT 32			TW 17		

(*d*)

R* (0)	C* (18)	O* (30)	T* (32)	P* (36)	W
RC 18	CO 12	OW 32	TP 4	PW 11	
RT 32			TW 17		

(*e*)

R* (0)	C* (18)	O* (30)	T* (32)	P* (36)	W* (47)
RC 18	CO 12		TP 4	PW 11	
RT 32					

(*f*)

Fig. 13-7

STEP 4: The starred nodes are R and C. The sums of interest are $0 + 32 = 32$ under R, obtained by adding the value of R to the cost of RT, and $18 + 12 = 30$ under C, obtained by adding the value of C to the cost of CO. Since 30 is the smaller sum, we circle CO, star O, assign O the value 30, and delete from Fig. 13-7(b) all other branches having O as second node, i.e., TO. The result is Fig. 13-7(c).

STEP 4: The starred nodes are R, C, and O. The sums of interest are $0 + 32 = 32$ under R, $18 + 28 = 46$ under C, and $30 + 17 = 47$ under O. The smallest sum is 32; hence we circle RT, star T, assign T the value 32, and delete from Fig. 13-7(c) all other branches with second node T. The result is Fig. 13-7(d).

STEP 4: The only starred nodes having uncircled branches under them in the current master list, Fig. 13-7(d), are O and T. For these nodes, the sums of interest are $30 + 32 = 62$ and $32 + 4 = 36$, respectively. Therefore, we circle TP, star P, assign P the value 36, and delete all other branches with second node P, of which there are none. The new master list is Fig. 13-7(e).

STEP 4: The only starred nodes having uncircled branches under them in the new master list are O, T, and P. The sums of interest are, respectively, $30 + 32 = 62$, $32 + 17 = 49$, and $36 + 11 = 47$. Since 47 is the smallest, we circle PW, star W (the sink), assign W the value 47, and delete from Fig. 13-7(e) all other branches having W as second node. The result is Fig. 13-7(f).

STEP 5: The minimum driving time from Ridgewood to Whippany is $z^* = 47$ min. To identify the optimal path, we search Fig. 13-7(f) for a circled branch having W as second node; it is PW. Next we search for a circled branch having P as second node; it is TP. Then we search for a circled branch having T as second node; it is RT. Since R is the source, the desired path is $\{RT, TP, PW\}$.

13.4 A manufacturing concern has been awarded a contract to produce casings. The contract is for 4 years and it is not expected to be renewed. The production process requires a specialized machine which the concern does not have. The concern can buy the machine, maintain it for the 4 years of the contract, and then sell it for scrap value; or it can replace the machine at the end of any given year by a new model. New models require less maintenance than older ones. Estimated net operating cost (purchase price plus maintenance minus trade-in) for buying a machine in the beginning of year i and trading it in at the beginning of year j is given in Table 13-3, with all figures expressed in thousand-dollar units.

Table 13-3

i \ j	1	2	3	4	5
1	···	12	19	33	49
2	···	···	14	23	38
3	···	···	···	16	26
4	···	···	···	···	13

Determine a replacement policy that will minimize the total operating cost for the machine over the life of the contract.

This problem can be solved by dynamic programming; alternatively, it can be modeled as a shortest-route problem on an *oriented* network. We let nodes $Y_1, \ldots, Y_4$ represent the beginnings of the years of the contract, and Y_5 the beginning of the fifth year. An oriented branch from Y_i to Y_j signifies purchase of a machine at the beginning of year i and trade-in or scrapping of the machine at the beginning of year j. The cost associated with each branch is the net operating cost. The network is shown in Fig. 13-8.

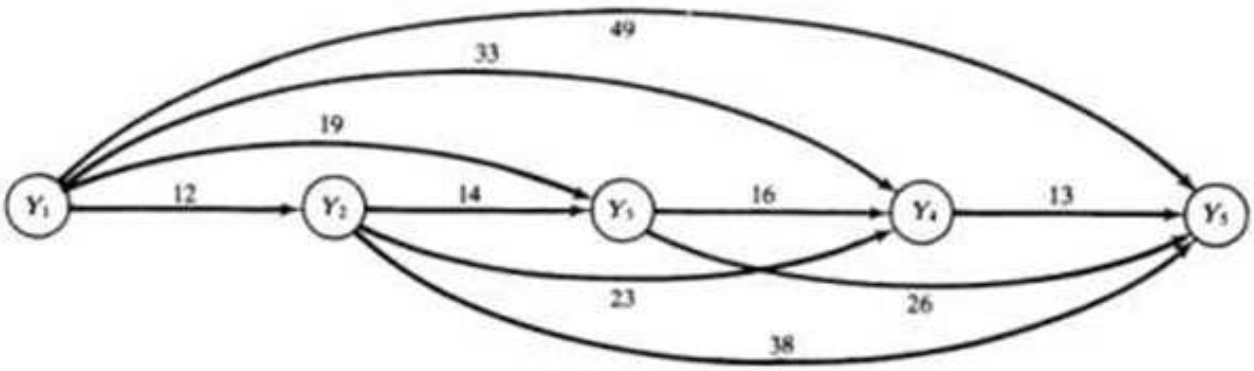

Fig. 13-8

Y_1	Y_2	Y_3	Y_4	Y_5
Y_1Y_2 12	Y_2Y_3 14	Y_3Y_4 16	Y_4Y_5 13	
Y_1Y_3 19	Y_2Y_4 23	Y_3Y_5 26		
Y_1Y_4 23	Y_2Y_5 38			
Y_1Y_5 49				

(*a*)

$Y\uparrow$ (0)	$Y\uparrow$ (12)	Y_3	Y_4	Y_5
Y_1Y_2 12	Y_2Y_3 14	Y_3Y_4 16	Y_4Y_5 13	
Y_1Y_3 19	Y_2Y_4 23	Y_3Y_5 26		
Y_1Y_4 33	Y_2Y_5 38			
Y_1Y_5 49				

(*b*)

$Y\uparrow$ (0)	$Y\uparrow$ (12)	$Y\uparrow$ (19)	Y_4	Y_5
Y_1Y_2 12	Y_2Y_4 23	Y_3Y_4 16	Y_4Y_5 13	
Y_1Y_3 19	Y_2Y_5 38	Y_3Y_5 26		
Y_1Y_4 33				
Y_1Y_5 49				

(*c*)

$Y\uparrow$ (0)	$Y\uparrow$ (12)	$Y\uparrow$ (19)	$Y\uparrow$ (33)	Y_5
Y_1Y_2 12	Y_2Y_5 38	Y_3Y_5 26	Y_4Y_5 13	
Y_1Y_3 19				
Y_1Y_4 33				
Y_1Y_5 49				

(*d*)

$Y\uparrow$ (0)	$Y\uparrow$ (12)	$Y\uparrow$ (19)	$Y\uparrow$ (33)	$Y\uparrow$ (45)
Y_1Y_2 12		Y_3Y_5 26		
Y_1Y_3 19				
Y_1Y_4 33				

(*e*)

Fig. 13-9

The master list for this oriented network is given in Fig. 13-9(*a*). Applying the cheapest-path algorithm to it, we obtain successively Figs. 13-9(*b*) through 13-9(*e*). From Fig. 13-9(*e*),

$$z^* = 45 \text{ (thousand dollars)}$$

The optimal path is found as $\{Y_1Y_3, Y_3Y_5\}$. This path represents the policy of buying a machine at the beginning of year 1, trading it in for a new machine at the beginning of year 3, and finally scrapping the 2-year-old machine at the beginning of year 5.

13.5 In Fig. 13-10, identify a path from source A to sink G that can accommodate positive flow.

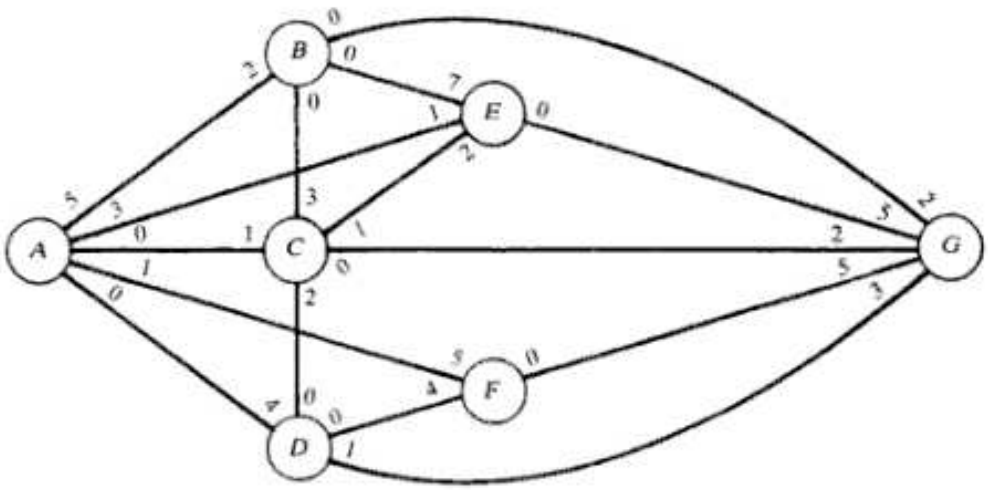

Fig. 13-10

We begin with the source and find all nodes that can be reached directly from A along branches allowing positive flow out of A. They are B, E, and F, as indicated in Fig. 13-11(*a*). Next we consider these three new nodes successively.

Focusing on B first, we identify all nodes *not shown* in Fig. 13-11(*a*) that can be reached from B along branches allowing positive flow out of B. There are none such. Focusing on E, we see that A, B, and C can be reached along branches allowing positive flow out of E; but since A and B already appear in Fig. 13-11(*a*), only C is added. From F, nodes A and D can be reached along branches allowing positive flow; but since A already appears in Fig. 13-11(*a*), we add only node D. The result is Fig. 13-11(*b*).

We now consider nodes C and D successively. Focusing on C first, we determine that A, B, E, and D all can be reached directly from C along branches with positive flow out of C. Since each of these nodes already appears in Fig. 13-11(*b*), we make no adjustments to it and consider next node D. From D, we can reach A and G along branches allowing positive flow. Since only G is new, we adjoin it to Fig. 13-11(*b*), obtaining Fig. 13-11(*c*). It follows from this last figure that $\{AF, FD, DG\}$ is a path from source to sink that can accommodate a positive flow (of 1 unit).

13.6 Determine the maximal flow of material that can be sent from source A to sink D through the network shown in Fig. 13-2.

One path from source to sink is the branch AD linking these two nodes directly. It can accommodate 8 units. Shipping this amount, we deliver 8 units to D, decrease the capacity of AD by 8, and increase the capacity of DA by 8. The resulting network is shown in Fig. 13-12(*a*).

Another path from source to sink that can accommodate positive flow is $\{AC, CB, BD\}$. The maximum amount of material that can be sent along this path is 4 units, the capacity of BD. Making such a shipment, we increase the supply at D by 4 units to $8 + 4 = 12$. Simultaneously, we decrease the capacities of AC, CB, and BD by 4 units and increase by this same amount the capacities of CA, BC, and DB. Figure 13-12(*a*) then becomes Fig. 13-12(*b*).

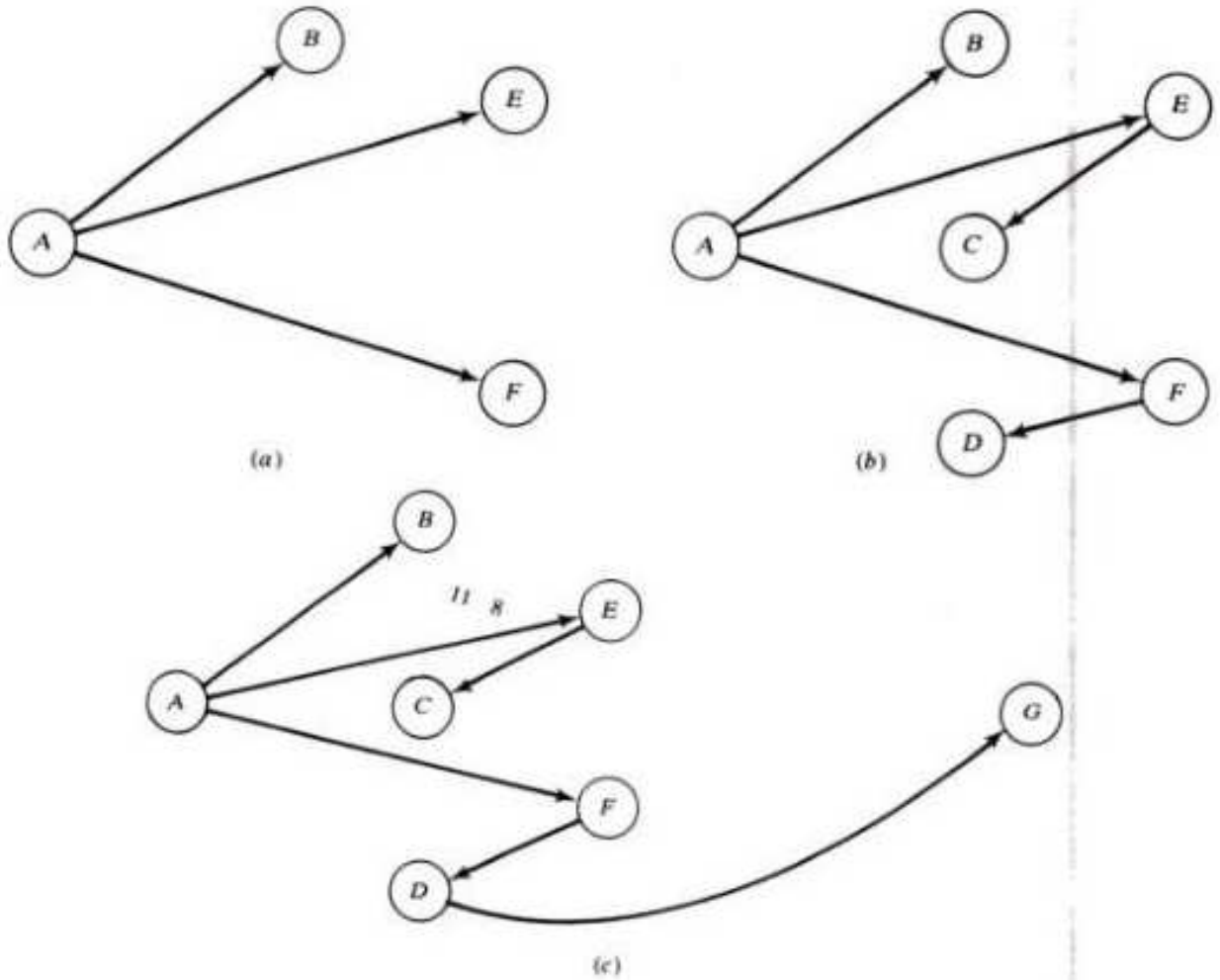

Fig. 13-11

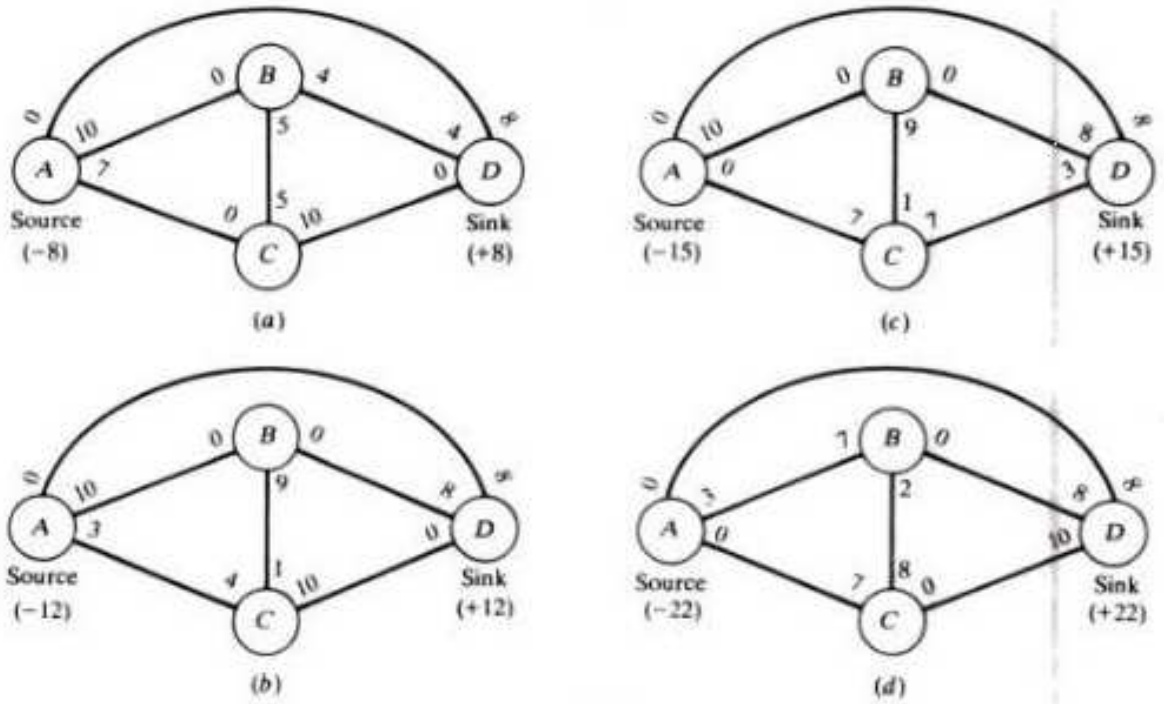

Fig. 13-12

Path $\{AC, CD\}$ in Fig. 13-12(b) can accommodate 3 units from A to D. Making this shipment, we increase the supply at D by 3 units to $12 + 3 = 15$, and decrease the capacities of AC and CD by 3. We also increase by 3 units the capacities of CA and DC. The new network is Fig. 13-12(c).

Path $\{AB, BC, CD\}$ in Fig. 13-12(c) can accommodate 7 units from source to sink. Making this shipment, we increase the supply at D to $15 + 7 = 22$ units, and decrease the capacities of AB, BC, and CD by 7. We also increase by 7 units the capacities of BA, CB, and DC. The result is Fig. 13-12(d).

There is no path from source to sink in Fig. 13-12(d) that permits positive flow. Therefore, the maximum amount of material that can be sent from A to D is 22 units. To determine the optimal shipping schedule, we compare Fig. 13-12(d) with Fig. 13-2. We note the following reductions in capacity: 7 units from A to B, 8 units from A to D, 7 units from A to C, 4 units from B to D, 3 units from B to C, and 10 units from C to D. These reductions, considered as shipments, constitute the optimal shipping schedule.

13.7 Explain the significance of increasing the reverse capacities, as stipulated in Step 3 of the maximal-flow algorithm.

Increasing these capacities allows for flows in the reverse directions at a later stage in the algorithm. Such potential flows are necessary to correct a previously designated flow which proves to be nonoptimal.

An example is given by Problem 13.6. In the second iteration, it was determined that path $\{AC, CB, BD\}$ could accommodate a direct flow of 4 units. Using this path, however, is not optimal; it was found that the optimal schedule ships 3 units from B to C and *nothing* from C to B. Nonetheless, shipping 4 units from C to B and then increasing the capacity from B to C by 4 units allowed one to correct this error later in the algorithm. Indeed, the last step in the iterative solution called for a shipment of 7 units along $\{AB, BC, CD\}$. But this shipment could not have been made had the capacity of BC not been increased from its original value of 5. Effectively, this 7-unit flow from B to C corrects the previous nonoptimal flow of 4 units from C to B, leaving a net flow of 3 units along BC in the direction of C.

Supplementary Problems

13.8 Solve the minimum-span problem for the network shown in Fig. 13-13.

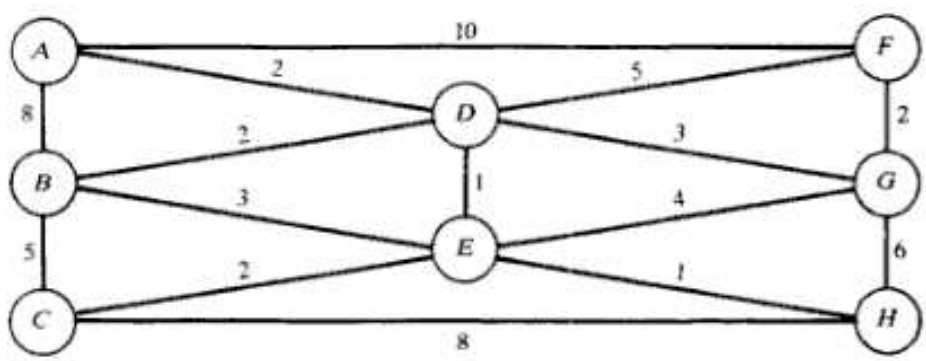

Fig. 13-13

13.9 Solve the minimum-span problem for the network shown in Fig. 13-14.

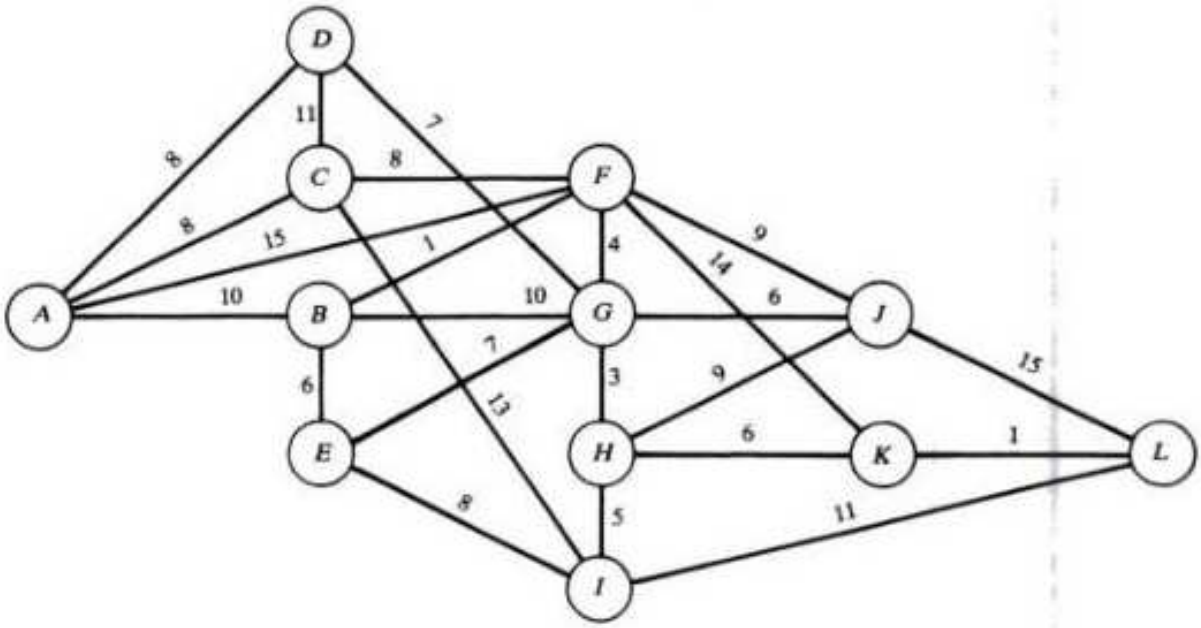

Fig. 13-14

13.10 Find the minimum-cost path connecting A and L in the network of Fig. 13-14.

13.11 Determine the maximum amount of material that can be shipped from H to A through the network shown in Fig. 13-13, assuming that the numbers on the branches represent the flow capacities in both directions.

13.12 Determine the maximum amount of material that can be shipped from A to K through the network shown in Fig. 13-14, assuming that the numbers on the branches represent the flow capacities in both directions.

13.13 Solve the maximal-flow problem for the network shown in Fig. 13-15 if A is the source and J is the sink.

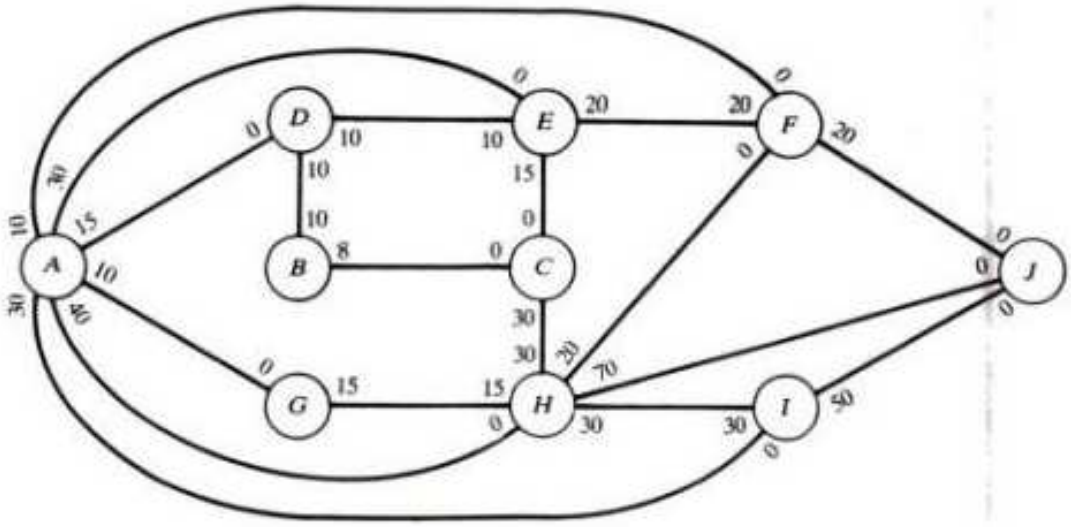

Fig. 13-15

13.14 Resolve Problem 13.11 if, in addition to H, node D is a source.

13.15 A shipping company must move 50 units of a product from Los Angeles to New York. Table 13-4 gives transportation costs (in dollars per unit) between the company's various depots; blank entries in the table signify that shipments cannot be made directly between corresponding depots. Find the cheapest shipping schedule. Solve first as a shortest-route problem, then, as a check, solve as a transshipment problem.

Table 13-4

	Los Angeles	San Francisco	Phoenix	Laramie	St. Louis	Chicago	New York
Los Angeles	...	7	8	...	39	...	95
San Francisco	7	...	22	17	...	36	85
Phoenix	8	22	...	14	25	27	...
Laramie	...	17	14	...	31	19	...
St. Louis	39	...	25	31	...	14	20
Chicago	...	36	27	19	14	...	13
New York	95	85	...	...	20	13	...

13.16 A construction firm has collected data on dump trucks, as shown in Table 13-5 (dollar amounts).

Table 13-5

	Age in Years				
	0–1	1–2	2–3	3–4	4–5
Maintenance Cost	7000	7500	9700	7700	9000
Lost Revenue for Down Time	500	800	1200	800	1000
Year-End Trade-In Value	16000	6000	9000	3500	2500

No dump truck is kept more than 5 years. Determine a replacement policy for a dump truck currently 2 years old, that will minimize the total operating cost over the next 9 years. Assume that new trucks cost \$21000 and only new trucks are purchased as replacements. Solve first as a shortest-route problem, then check your solution with dynamic programming. (*Hint*: Take Y_0 as the beginning of the period. Then Y_1 through Y_9 are the beginning of the next 9 years, and Y_{-2} represents the day the current truck was purchased. Y_{-1} is not needed.)

13.17 A *cut* through a network having a source and a sink is any set of oriented branches that contains at least one branch from every path from source to sink. The *cut value* is the sum of the flow capacities in the specified directions of the branches comprising the cut. For the network of Fig. 13-16, which of the three indicated sets of branches are cuts, and what are the cut values?

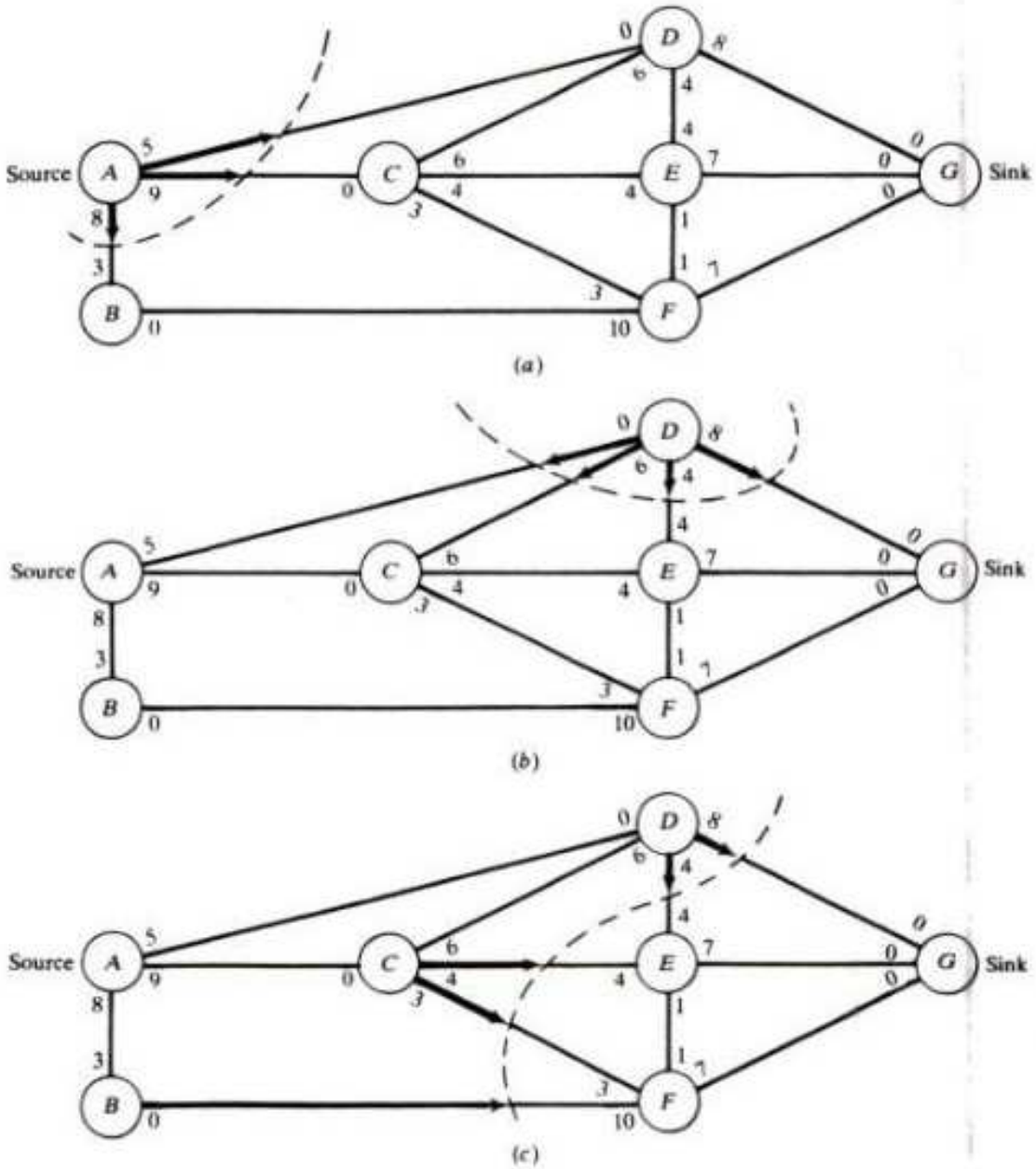

Fig. 13-16

13.18 The *max-flow, min-cut theorem* states that for any network with a single source and a single sink the maximum flow through the network equals the minimum cut value in the network. Using this theorem and the results of Problem 13.17, determine an upper bound on the *flow* through the network of Fig. 13-16.

13.19 Find a cut through Fig. 13-10 that has value 1. Using the max-flow, min-cut theorem and the result of Problem 13-5, conclude that the maximum flow through the network is 1 unit.

Chapter 14

Project Planning Using PERT/CPM

PERT/CPM

A project is a set of activities to be performed in a specific sequence to completion. An activity is a task to be executed using time and resources. The objective of project management is to minimize the total project time subject to the resource constraints. The two techniques widely used in project management are CPM (Critical Path Method) and PERT (Project/Program Evaluation and Review Technique). Although the two terms PERT and CPM are used interchangeably today, historically CPM was based on deterministic times while PERT was based on probabilistic times. In this chapter, project scheduling through PERT/CPM is discussed in the following order: Construction of the Network (Arrow) Diagram; Critical Path Computations for CPM; Critical Path Computations for PERT; and Project Time vs Project Cost.

CONSTRUCTION OF THE NETWORK (ARROW) DIAGRAM

The network diagram represents a project in that it shows the precedence relationships of the activities of the project along with activity times. The activities, which consume time and resources, are represented by "arrows." The precedence relationships of the activities are indicated through "events" (nodes). Events are just points in time, represented by circles. They do not consume any resources; they signify the beginning of some activities and the ending of some other activities.

Consider the following diagram in which an activity (i, j) with duration $D_{i,j}$ is represented by an arrow between two events or nodes i (tail) and j (head). Usually the activities are named by letters (such as A, B, etc.), while the events are denoted by numbers (such as 1, 2, etc.).

Sometimes in a network diagram it is necessary to use dummy activities, which consume no time or resources, represented by dotted arrows.

The purpose of the dummy activity can be one of the following:

(*a*) to represent an activity *uniquely* as below:

Both activities A and B are represented by events (1, 2).

Activity A = events (1, 3)
Activity B = events (1, 2)

(*b*) to represent precedence relationships *exactly* as below:

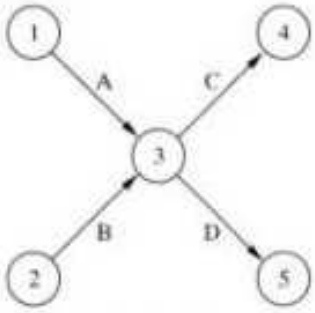

Both activities C and D are individually preceded by both activities A and B.

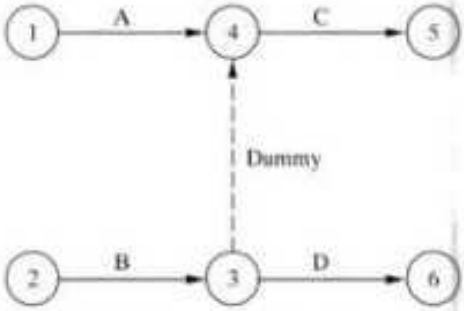

Activity C is preceded by both A and B. Activity D is preceded by B only.

Example 14.1 Construct a network diagram for a project consisting of the following activities:

Activity	Immediate Predecessor(s)
A	–
B	–
C	A, B
D	B
E	D
F	C, E
G	D

F and G are the terminal activities of the project.

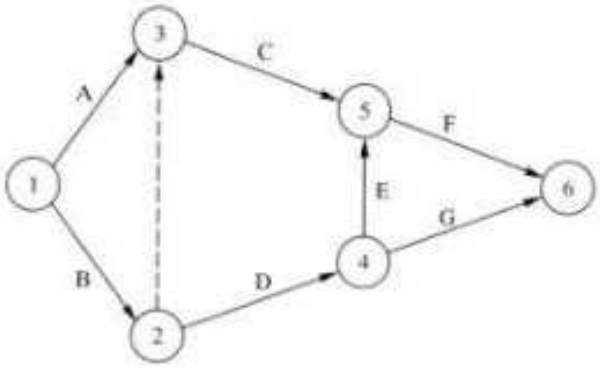

CRITICAL PATH COMPUTATIONS FOR CPM

Through computations performed on the network (arrow) diagram (chart), CPM provides the following:

(*a*) start and completion times for each event

(*b*) critical and noncritical activities

(*c*) total float and free float times for activities.

Example 14.2 Suppose the project in Example 14.1 has the following activity times:

Activity	Time (Days)
A	3
B	4
C	5
D	6
E	7
F	8
G	9

(*a*) Find the critical path.
(*b*) What is the project completion time?
(*c*) Compute the total floats (slacks) and free floats for the activities.

The critical path computations are performed in two passes—forward and backward. In the forward pass, starting with a time of 0 for the first event, the computations proceed from left to right up to the final event. The forward pass computations provide the earliest start (ES) times for the events. These times are entered in squares in the immediate vicinities of the corresponding events.

For any activity (i, j), let ES_i denote the earliest start time of event i.

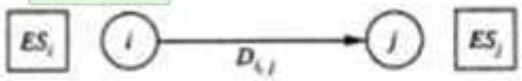

Then
$$ES_j = ES_i + D_{i,j}$$

In Example 14.2, consider activity A (1, 2).

$$ES_2 = ES_1 + D_{1,2} = 0 + 4 = 4$$

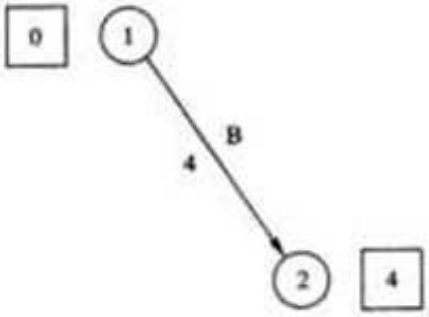

If more than one activity enters an event, the earliest start time for that event is computed as follows:

$$ES_j = \max_i \{ES_i + D_{i,j}\}, \quad \text{for all } i \text{ entering into } j.$$

This is because the event cannot start until the entering activities are completed.

In Example 14.2, consider event 3. The two entering activities into event 3 are A (1, 3) and Dummy (2, 3).

$$\begin{aligned} ES_3 &= \max_i \{ES_i + D_{i,3}\}, \quad i = 1, 2 \\ &= \max \{ES_1 + D_{1,3}, ES_2 + D_{2,3}\} \\ &= \max \{0 + 3, 4 + 0\} = 4 \end{aligned}$$

Proceeding in a similar fashion, the earliest start times for all events are computed as shown below:

$$ES_4 = ES_2 + D_{2,4} = 4 + 6 = 10$$

$$\begin{aligned} ES_5 &= \max_i \{ES_i + D_{i,5}\}, \quad i = 3, 4 \\ &= \max \{ES_3 + D_{3,5}, ES_4 + D_{4,5}\} = \max \{4 + 5, 10 + 7\} = 17 \end{aligned}$$

$$\begin{aligned} ES_6 &= \max_i \{ES_i + D_{i,6}\}, i = 4, 5 \\ &= \max \{ES_4 + D_{4,6}, ES_5 + D_{5,6}\} = \max \{10 + 9, 17 + 8\} = 25 \end{aligned}$$

This ends the forward pass computations, giving a project completion time of 25 days.

In the backward pass, starting with the final node, the computations proceed from right to left up to the beginning event. The backward pass computations provide the latest completion (LC) times for the events. These times are entered in semicircles in the immediate vicinities of the corresponding events.

For any activity (i, j), let LC_i denote the latest completion time of event i.

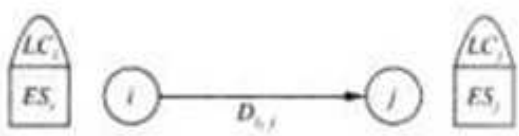

Then

$$LC_i = LC_j - D_{i,j}$$

To get started, the latest completion time of the final event in the backward pass is assumed to be the earliest start time of that event in the forward pass.

In Example 14.2, consider activity F (5, 6).

$$LC_6 = ES_6 = 25$$

$$LC_5 = LC_6 - D_{5,6} = 25 - 8 = 17$$

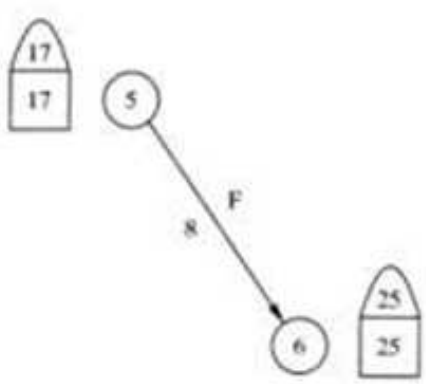

If more than one activity leaves an event, the latest completion time for that event is computed as follows:

$$LC_i = \min_j \{LC_j - D_{i,j}\}, \quad \text{for all } j \text{ leaving from } i.$$

This will ensure progress in meeting the project completion time.

In Example 14.2, consider event 4. The two leaving activities from event 4 are E (4, 5) and G (4, 6).

$$\begin{aligned} LC_4 &= \min_j \{LC_j - D_{4,j}\}, \quad j = 5, 6 \\ &= \min \{LC_5 - D_{4,5}, LC_6 - D_{4,6}\} \\ &= \min \{17 - 7, 25 - 9\} = 10 \end{aligned}$$

Proceeding in a similar fashion, the latest completion times for all events are completed as shown below:

$$LC_3 = LC_5 - D_{3,5} = 17 - 5 = 12$$

$$\begin{aligned} LC_2 &= \min_j \{LC_j - D_{2,j}\}, \quad j = 3, 4 \\ &= \min \{LC_3 - D_{2,3}, LC_4 - D_{2,4}\} \\ &= \min \{12 - 0, 10 - 6\} = 4 \end{aligned}$$

$$\begin{aligned} LC_1 &= \min_j \{LC_j - D_{1,j}\}, \quad j = 2, 3 \\ &= \min \{LC_2 - D_{1,2}, LC_3 - D_{1,3}\} \\ &= \min \{4 - 4, 12 - 3\} = 0 \end{aligned}$$

This ends the backward pass computations, confirming the project start time of 0.

After completing the critical path (forward pass and backward pass) computations, the complete network diagram appears as in Fig. 14-1. This enables us to determine the critical activities of the project. An activity (i, j) is said to be critical, if and only if it satisfies all the conditions given below:

1. $ES_i = LC_i$
2. $ES_j = LC_j$
3. $ES_j - ES_i = LC_j - LC_i = D_{i,j}$

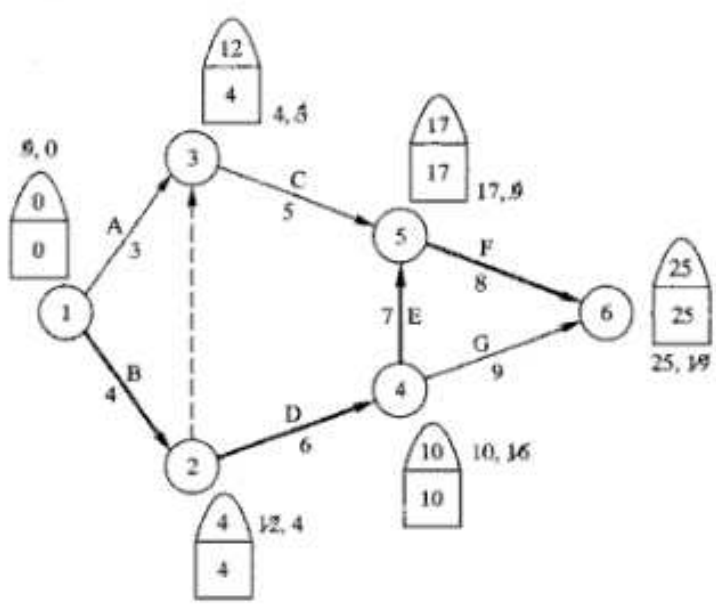

Fig. 14-1. Critical path by CPM

Application of the above conditions to Example 14.2 indicates the following activities to be critical: B, D, E, and F. In other words, activities B, D, E, and F form the critical path. In terms of events, 1-2-4-5-6 is the critical path. The project completion time is 25 days. It must be noted that a critical path is a continuous path starting with the first event and ending with the last event. It is shown in bold line. Also, in some cases, it is possible to have multiple critical paths. Now, we can define the slack or total float for an activity (i, j) as follows:

$$\text{Slack} = \text{Total Float} = TF_{i,j} = LC_j - ES_i - D_{i,j}$$

The total float for an activity is the difference between its maximum available time $(LC_j - ES_i)$ and its duration $(D_{i,j})$. It signifies the time by which an activity can be delayed without delaying the project. A zero slack for an activity indicates that it cannot be delayed without delaying the project and hence it is called a critical activity. On the other hand, a positive slack for an activity means that it can be delayed by the length of the slack without delaying the project and hence it is called a noncritical activity.

In Example 14.2, consider the total floats for activities C (3, 5) and D (2, 4):

$$\text{Activity C:} \quad TF_{3,5} = LC_5 - ES_3 - D_{3,5} = 17 - 4 - 5 = 8$$

Activity C has a positive slack indicating it is noncritical.

$$\text{Activity D:} \quad TF_{2,4} = LC_4 - ES_2 - D_{2,4} = 10 - 4 - 6 = 0$$

Activity D has a zero slack indicating it is critical.

Similarly the total floats for all the other activities in Example 14.2 can be computed.

There is yet another float called free float, which is useful in considering project time vs project cost. Free float for an activity (i, j) is the difference between its available time (based on earliest start times) and its duration. It is given as follows:

$$FF_{i,j} = ES_j - ES_i - D_{i,j}$$

In Example 14.2, consider the free floats for activities A (1, 3) and E (4, 5):

$$\text{Activity A:} \quad FF_{1,3} = ES_3 - ES_1 - D_{1,3} = 4 - 0 - 3 = 1$$

$$\text{Activity E:} \quad FF_{4,5} = ES_5 - ES_4 - D_{4,5} = 17 - 10 - 7 = 0$$

Similarly the free floats for all the other activities in Example 14.2 can be calculated.

The above calculations are summarized in Table 14-1.

Table 14-1 Critical path calculations including floats

Activity (i, j)	Duration $D_{i,j}$	ES_i	LC_j	ES_j	Total Float (Slack) $TF_{i,j} = LC_j - ES_i - D_{i,j}$	Critical	Free Float $FF_{i,j} = ES_j - ES_i - D_{i,j}$
A (1, 3)	3	0	12	4	$12 - 0 - 3 = 9$	–	$4 - 0 - 3 = 1$
B (1, 2)	4	0	4	4	$4 - 0 - 4 = 0$	Yes	$4 - 0 - 4 = 0$
C (3, 5)	5	4	17	17	$17 - 4 - 5 = 8$	–	$17 - 4 - 5 = 8$
D (2, 4)	6	4	10	10	$10 - 4 - 6 = 0$	Yes	$10 - 4 - 6 = 0$
E (4, 5)	7	10	17	17	$17 - 10 - 7 = 0$	Yes	$17 - 10 - 7 = 0$
F (5, 6)	8	17	25	25	$25 - 17 - 8 = 0$	Yes	$25 - 17 - 8 = 0$
G (4, 6)	9	10	25	25	$25 - 10 - 9 = 6$	–	$25 - 10 - 9 = 6$

CRITICAL PATH COMPUTATIONS FOR PERT

The network diagrams for PERT and CPM are identical except for the activity times. The time estimates for CPM are deterministic, while those for PERT are probabilistic. In PERT, each activity has the following three time estimates:

a = optimistic time estimate under the best of conditions
b = pessimistic time estimate under the worst of conditions
m = most likely (probable) time estimate under normal conditions

The probabilistic nature of the activity times is described by the beta distribution whose mean and variance are given below:

Mean: $$E(D_{i,j}) = (a + b + 4m)/6$$

Variance: $$\sigma^2_{i,j} = [(b - a)/6]^2$$

Example 14.3 Suppose the following estimates of activity times (days) are provided for Example 14.1.

Activity	Optimistic (a)	Most Likely (m)	Pessimistic (b)
A	1	3	5
B	3	4	5
C	4	5	6
D	3	5	7
E	5	6	13
F	4	7	10
G	6	8	10

(a) Determine the expected completion time and variance for the project.

(b) What is the probability that the project will be completed within 20 days? 25 days?

Activity (i, j)	Expected Time $E(D_{i,j})$	Variance $\sigma^2_{i,j}$
A (1, 3)	3	0.4444
B (1, 2)	4	0.1111
C (3, 5)	5	0.1111
D (2, 4)	5	0.4444
E (4, 5)	7	1.7777
F (5, 6)	7	1.0000
G (4, 6)	8	0.4444

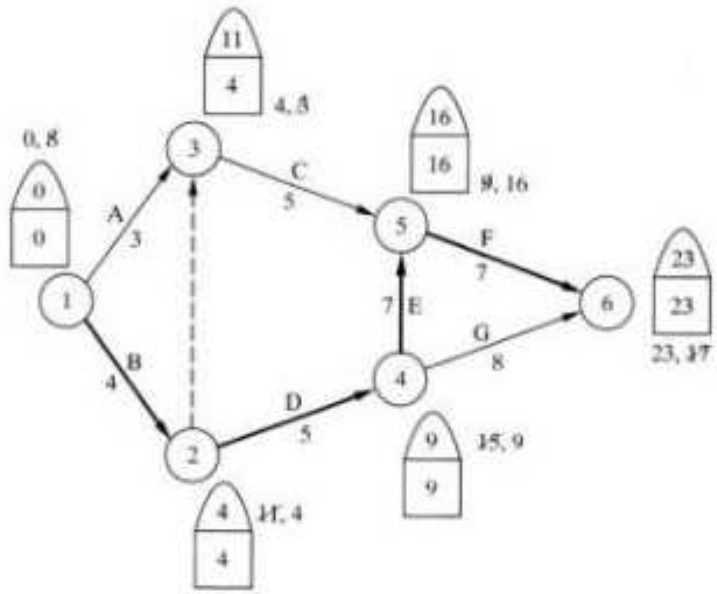

Critical path is B, D, E, F.

(*a*) Expected project completion time $= E(T) = E(T_B) + E(T_D) + E(T_E) + E(T_F) = 4 + 5 + 7 + 7 = 23$

Project variance $= \sigma^2 = \sigma_B^2 + \sigma_D^2 + \sigma_E^2 + \sigma_F^2 = 0.1111 + 0.4444 + 1.7777 + 1 = 3.3332$

(*b*) Probability that the project completion time $T \leq 20$ days:

$$K = 20$$

$$E(T) = 23$$

$$\sigma = \sqrt{3.3332} = 1.83$$

$$c = \frac{K - E(T)}{\sigma} = \frac{20 - 23}{1.83} = -1.64$$

$P(T \leq 20) = P(Z \leq C) = P(Z \leq -1.64) = 0.0505$ (from normal distribution tables)

Probability that the project completion time $T \leq 25$ days:

$$K = 25$$

$$E(T) = 23$$

$$\sigma = 1.83$$

$$C = \frac{K - E(T)}{\sigma} = \frac{25 - 23}{1.83} = 1.09$$

$P(T \leq 25) = P(Z \leq C) = P(Z \leq -1.09) = 0.8621$ (from normal distribution tables).

PROJECT TIME VS PROJECT COST

The "normal" time for an activity can be reduced by using increased resources. The limit beyond which an activity time cannot be shortened is known as the "crash limit." Let D and C represent the normal time (duration) and normal cost for an activity, while D' and C' denote the crash time (duration) and crash cost for the same activity. Then the "crash limit" for an activity is the difference between its normal time and its crash time.

$$\text{Crash Limit} = D - D'$$

Assuming a straight line cost–duration relationship,

$$\text{Slope} = (C' - C)/(D - D') = \text{Crash cost per unit time.}$$

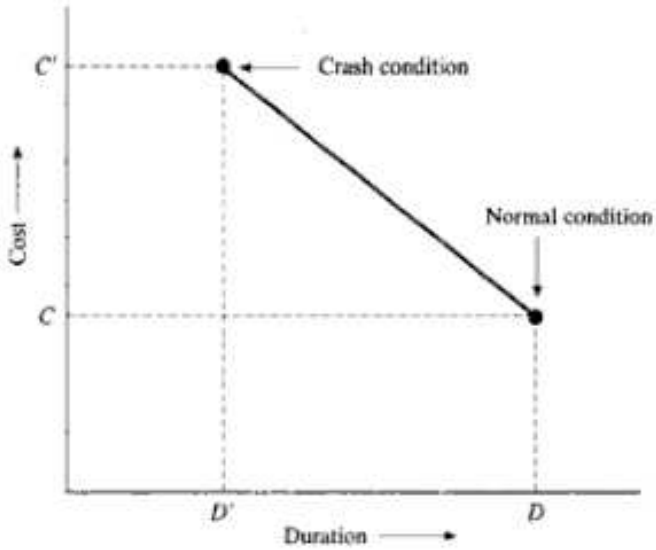

The project completion time can be reduced by reducing the normal times of critical activities. Reducing the critical activity with the minimum cost–duration slope will yield the minimum cost. This critical activity can be reduced up to the "crash limit."

This does not guarantee that the project time will also be reduced by the same length, since the above reduction may have led to a new critical path. To find whether a new critical path may occur, check whether a positive free float of any non-critical activity becomes zero. By reducing the duration of the critical activity by one time unit, compute the new free floats of the non-critical activities; check which ones have reduced their old positive free floats by one unit; of these, the one with the smallest old positive free float gives the positive free float limit. Thus for a critical activity,

$$\text{reduction limit} = \min\{\text{crash limit, positive free float limit}\}$$

Continue to proceed in the above fashion until all critical activities in the latest critical path are at their crash limits.

Example 14.4 Consider the following arrow diagram with activity times given in days:

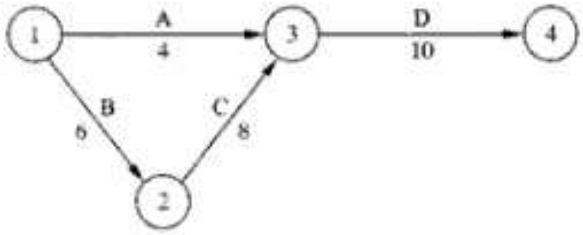

The normal and crash data for this project are as follows:

Activity	Normal Time (Days)	Crash Time (Days)	Normal Cost ($)	Crash Cost ($)
A	4	3	80	105
B	6	4	180	250
C	8	5	200	320
D	10	6	350	530

(*a*) Find the critical path.

(*b*) Find the project completion time and the corresponding cost.

(*c*) If we want to complete the project in 18 days, find the best crash time and cost.

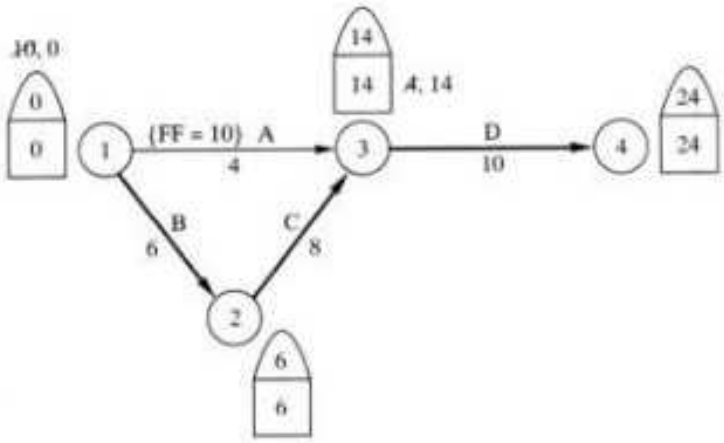

(*a*) Critical path is B, C, D.

(*b*) Project completion time = 24 days
Project cost = 80 + 180 + 200 + 350 = \$810

(*c*) From the given data, construct the following crash time–cost table.

Activity (i, j)	Crash Limit $(D - D')$	Crash Cost/Day $(C' - C)/(D - D')$
A (1, 3)	$4 - 3 = 1$	$(105 - 80)/(4 - 3) = 25$
B (1, 2)	$6 - 4 = 2$	$(250 - 180)/(6 - 4) = 35$
C (2, 3)	$8 - 5 = 3$	$(320 - 200)/(8 - 5) = 40$
D (3, 4)	$10 - 6 = 4$	$(530 - 350)/(10 - 6) = 45$

From the critical path calculations, we have the following information:

Activity (i, j)	A (1, 3)	B (1, 2)	C (2, 3)	D(3, 4)
Critical	–	yes	yes	yes
Free Float (FF)	10	–	–	–

Since the critical activity B has the lowest "crash cost per day," it becomes the first candidate for crash. The length by which B can be reduced is found as follows:

$$\text{reduction limit} = \min\{\text{crash limit, positive FF limit}\} = \min\{2, 10\} = 2$$

Hence, crash activity B by 2 days.

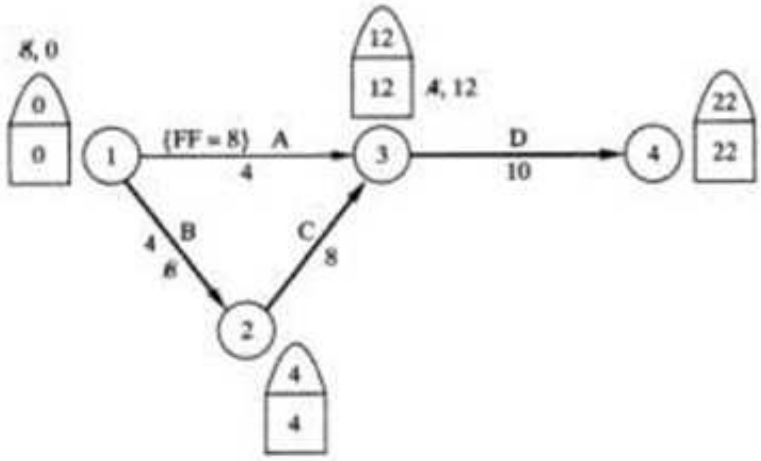

From the critical path calculations, we have the following information:

Critical path is still B, C, D

Project completion time = 22 days

Project cost = 810 + (2)(35) = \$880

Activity (i, j)	A (1, 3)	B (1, 2)	C (2, 3)	D (3, 4)
Critical	–	yes	yes	yes
Free Float (FF)	8	–	–	–

Since the crash limit for critical activity B is reached, consider critical activity C with the next lowest "crash cost per day" for crash. The length by which C can be reduced is found as follows:

reduction limit = min {crash limit, positive FF limit} = min {3, 8} = 3

Hence, crash activity C by 3 days.

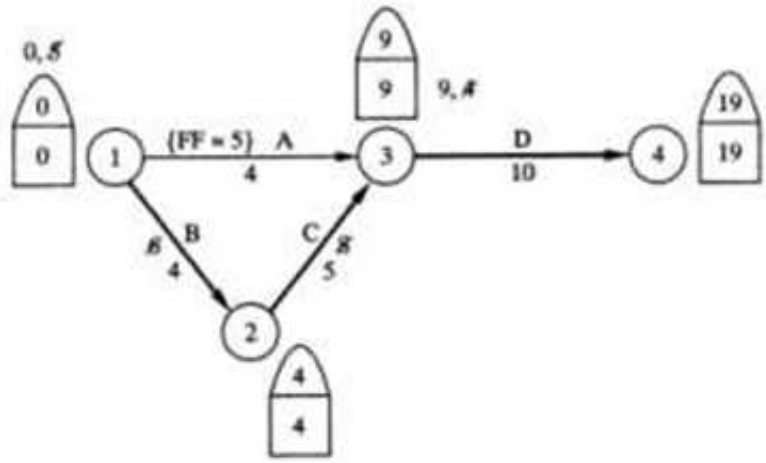

From the critical path calculations, we have the following information:

Critical path is still B, C, D

Project completion time = 19 days

Project cost = 880 + (3)(40) = \$1000

Activity (i, j)	A (1, 3)	B (1, 2)	C (2, 3)	D (3, 4)
Critical	–	yes	yes	yes
Free Float (FF)	5	–	–	–

Since the crash limit for critical activity C is reached, consider critical activity D with the next lowest "crash cost per day" for crash. The length by which D can be reduced is found as follows:

$$\text{reduction limit} = \min\{\text{crash limit, positive FF limit}\} = \min\{4, 5\} = 4$$

Although we can reduce D by 4 days, it is only necessary to reduce it by 1 day to reach our project completion goal of 18 days. (Note: the project completion time from the previous critical path calculations is 19 days.)

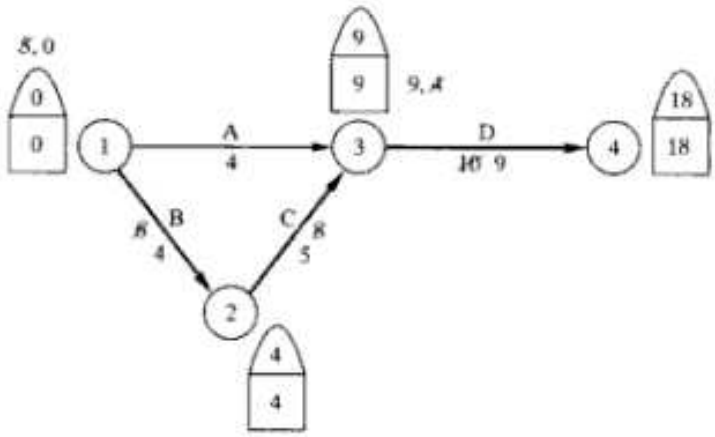

From the critical path calculations, we have the following information:

Critical path is still B, C, D
Projection completion time = 18 days
Project cost = 1000 + (1)(45) = $1045

Solved Problems

14.1 The ABC Manufacturing Company is considering the construction of a new factory building. The following list shows the project activities, precedence relationships, and time estimates:

Activity	Description	Immediate Predecessor(s)	Time
A	Problem definition	–	3
B	Preliminary study of costs and constraints	A	3
C	Analysis of problems in existing building	A	3
D	Incorporation of requirements in new building	C	5
E	Detailed drawings of new building	B, C	6
F	Contractor building a prototype	D, E	9
G	Cost analysis	E	5
H	Engineers reviewing feasibility	G	3
I	Contractor building the factory	G, F	5
J	Building inspection	I, H	6
K	Final plant layout	J	4

(*a*) Develop a CPM network for this project.

(*b*) Identify the critical path.

(*c*) Compute the total and free floats for the activities.

(*a*)

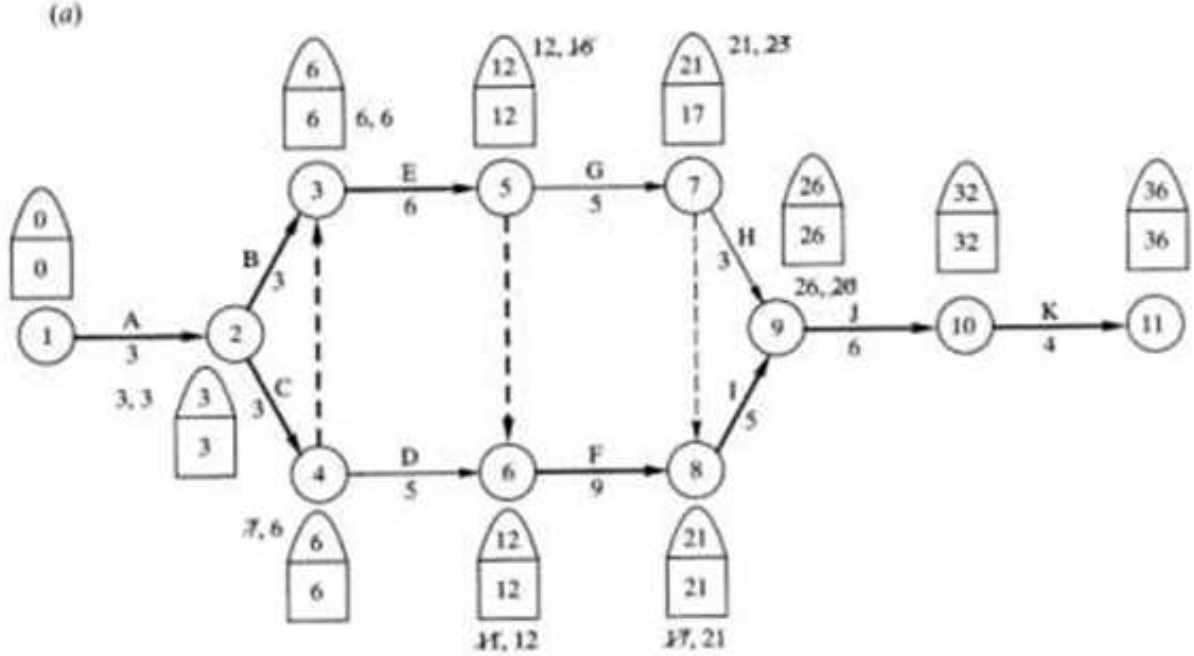

(*b*) Critical paths are A, B, E, F, I, J, K and A, C, E, F, I, J, K.

(*c*)

Activity (i, j)	Duration $D_{i,j}$	ES_i	LC_j	ES_j	Total Float (Slack) $TF_{i,j} = LC_j - ES_i - D_{i,j}$	Critical	Free Float $FF_{i,j} = ES_j - ES_i - D_{i,j}$
A (1, 2)	3	0	3	3	$3 - 0 - 3 = 0$	Yes	$3 - 0 - 3 = 0$
B (2, 3)	3	3	6	6	$6 - 3 - 3 = 0$	Yes	$6 - 3 - 3 = 0$
C (2, 4)	3	3	6	6	$6 - 3 - 3 = 0$	Yes	$6 - 3 - 3 = 0$
D (4, 6)	5	6	12	12	$12 - 6 - 5 = 1$	–	$12 - 6 - 5 = 1$
E (3, 5)	6	6	12	12	$12 - 6 - 6 = 0$	Yes	$12 - 6 - 6 = 0$
F (6, 8)	9	12	21	21	$21 - 12 - 9 = 0$	Yes	$21 - 12 - 9 = 0$
G (5, 7)	5	12	21	17	$21 - 12 - 5 = 4$	–	$17 - 12 - 5 = 0$
H (7, 9)	3	17	26	26	$26 - 17 - 3 = 6$	–	$26 - 17 - 3 = 6$
I (8, 9)	5	21	26	26	$26 - 21 - 5 = 0$	Yes	$26 - 21 - 5 = 0$
J (9, 10)	6	26	32	32	$32 - 26 - 6 = 0$	Yes	$32 - 26 - 6 = 0$
K (10, 11)	4	32	36	36	$36 - 32 - 4 = 0$	Yes	$36 - 32 - 4 = 0$

14.2 An industrial project has the following data:

Activity	Immediate Predecessor(s)	Duration (Weeks)
A	–	5
B	–	5
C	B	2
D	A, C	2
E	A, C	3
F	A, C	1
G	B	2
H	B	7
I	E	13
J	E, D	6
K	F, G, H	4
L	H	5
M	J, K, L	5

I and M are the terminal activities of the project.

(*a*) Develop a network diagram and find the critical path.

(*b*) Compute the total and free floats for the activities.

(*a*)

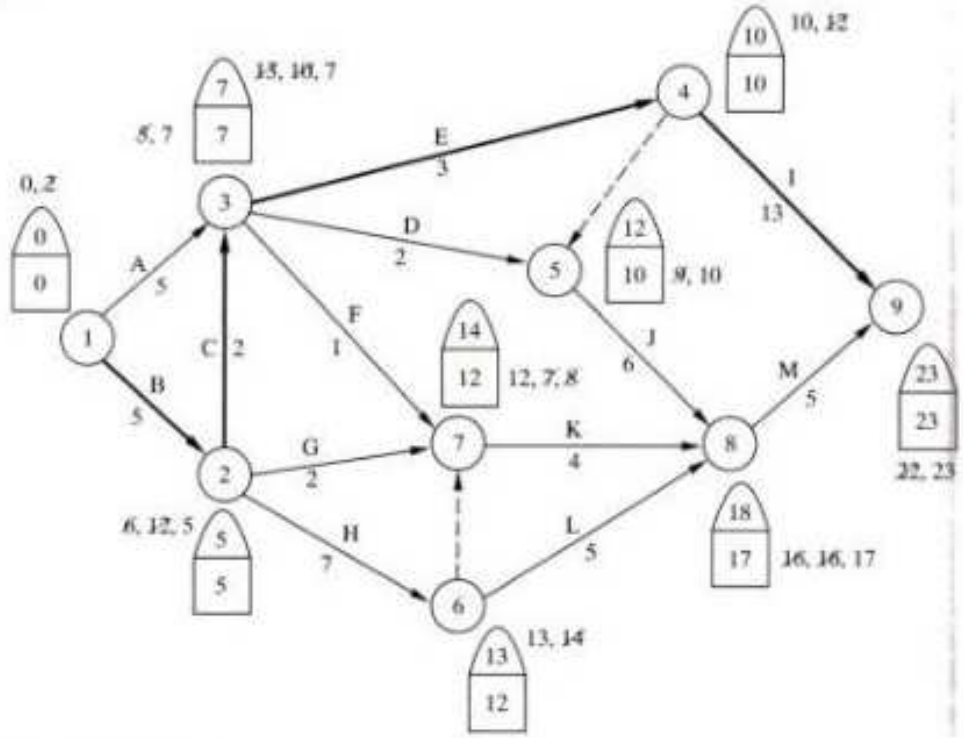

Critical path is B, C, E, I.

(b)

Activity (i, j)	Duration $D_{i,j}$	ES_i	LC_j	ES_j	Total Float (Slack) $TF_{i,j} = LC_j - ES_i - D_{i,j}$	Critical	Free Float $FF_{i,j} = ES_j - ES_i - D_{i,j}$
A (1, 3)	5	0	7	7	$7 - 0 - 5 = 2$	–	$7 - 0 - 5 = 2$
B (1, 2)	5	0	5	5	$5 - 0 - 5 = 0$	Yes	$5 - 0 - 5 = 0$
C (2, 3)	2	5	7	7	$7 - 5 - 2 = 0$	Yes	$7 - 5 - 2 = 0$
D (3, 5)	2	7	12	10	$12 - 7 - 2 = 3$	–	$10 - 7 - 2 = 1$
E (3, 4)	3	7	10	10	$10 - 7 - 3 = 0$	Yes	$10 - 7 - 3 = 0$
F (3, 7)	1	7	14	12	$14 - 7 - 1 = 6$	–	$12 - 7 - 1 = 4$
G (2, 7)	2	5	14	12	$14 - 5 - 2 = 7$	–	$12 - 5 - 2 = 5$
H (2, 6)	7	5	13	12	$13 - 5 - 7 = 1$	–	$12 - 5 - 7 = 0$
I (4, 9)	13	10	23	23	$23 - 10 - 13 = 0$	Yes	$23 - 10 - 13 = 0$
J (5, 8)	6	10	18	17	$18 - 10 - 6 = 2$	–	$17 - 10 - 6 = 1$
K (7, 8)	4	12	18	17	$18 - 12 - 4 = 2$	–	$17 - 12 - 4 = 1$
L (6, 8)	5	12	18	17	$18 - 12 - 5 = 1$	–	$17 - 12 - 5 = 0$
M (8, 9)	5	17	23	23	$23 - 17 - 5 = 1$	–	$23 - 17 - 5 = 1$

14.3 Draw a PERT network diagram for a construction project with the activity information given below:

		Duration (Weeks)		
Activity	Immediate Predecessor(s)	Optimistic (a)	Most Likely (m)	Pessimistic (b)
A	–	7	16	28
B	A	4	19	25
C	A	10	16	37
D	B	7	13	37
E	B, C	13	19	33
F	B	19	22	33
G	D, E	4	7	19
H	F, G	13	19	49
I	B, C	13	25	37
J	I, H	7	13	19

(*a*) Identify the critical path.

(*b*) Determine the probability of completing the project in two years (104 weeks).

(*a*)

Activity (i, j)	Expected Time $E(D_{i,j})$	Variance $\sigma^2_{i,j}$
A (1, 2)	16.5	12.25
B (2, 3)	17.5	12.25
C (2, 4)	18.5	20.25
D (3, 5)	16	25
E (4, 5)	20.33	11.11
F (3, 6)	23.33	5.44
G (5, 6)	8.5	6.25
H (6, 7)	23	36
I (4, 7)	25	16
J (7, 8)	13	4

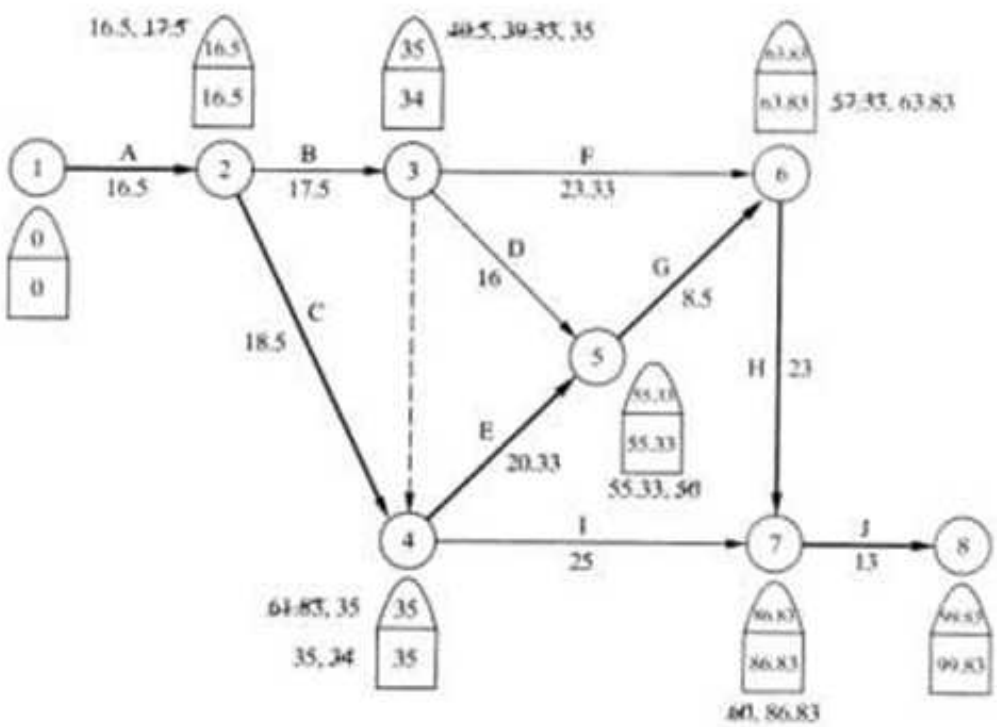

Critical path is A, C, E, G, H, J.

(*b*) Probability that the product completion time $T \leq 104$ weeks:

$$K = 104$$

$$E(T) = 99.83$$

$$\sigma^2 = \sigma_A^2 + \sigma_C^2 + \sigma_E^2 + \sigma_G^2 + \sigma_H^2 + \sigma_J^2$$

$$= 12.25 + 20.25 + 11.11 + 6.25 + 36 + 4 = 89.96$$

$$\sigma = \sqrt{89.96} = 9.48$$

$$C = \frac{K - E(T)}{\sigma} = \frac{104 - 99.83}{9.48} = 0.44$$

$$P(T \leq 33) = P(z \leq C) = P(z \leq 0.44) = 0.17 \quad \text{(from normal distribution tables)}$$

14.4 The project of constructing a small bridge in Wilmington, Pennsylvania consists of 10 major activities. Information pertaining to the project is given below:

Activity	Optimistic (a)	Most Likely (m)	Pessimistic (b)
A	2	5	8
B	4	7	10
C	4	9	14
D	6	10	20
E	1	3	5
F	3	6	9
G	4	5	12
H	6	8	10

(a) Develop a PERT network for this project.

(b) Find the critical path.

(c) Compute the probability of completing the project in 29 weeks.

(a)

Activity (i, j)	Expected Time $E(D_{i,j})$	Variance $\sigma_{i,j}^2$
A (1, 2)	5	1
B (2, 3)	7	1
C (2, 4)	9	2.78
D (3, 5)	11	5.44
E (4, 6)	3	0.44
F (4, 5)	6	1
G (5, 7)	6	1.78
H (6, 7)	8	0.44

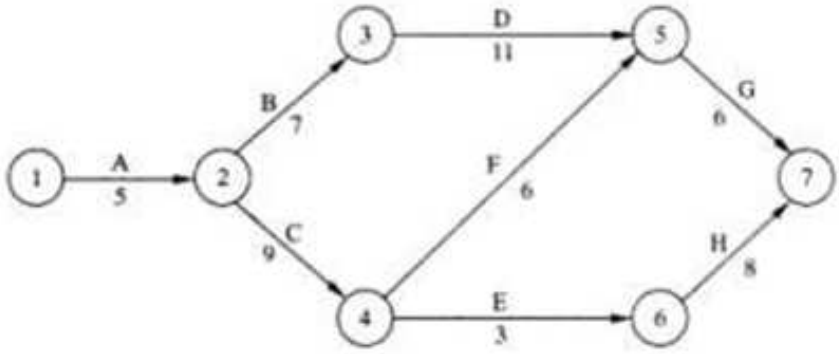

(*b*)

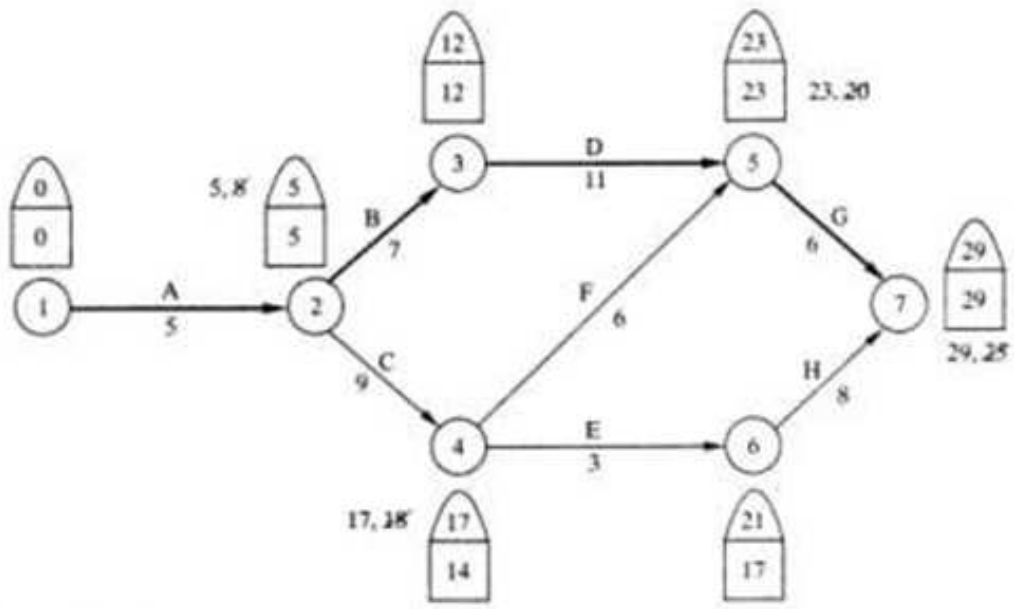

Critical path is A, B, D, G.

(*c*) Probability that the project completion time $T \leq 36$ weeks:

$$K = 36$$

$$E(T) = 29$$

$$\sigma^2 = \sigma_A^2 + \sigma_B^2 + \sigma_D^2 + \sigma_G^2 = 1 + 1 + 5.44 + 1.78 = 9.22$$

$$\sigma = \sqrt{9.22} = 3.04$$

$$C = \frac{K - E(T)}{\sigma} = \frac{36 - 29}{3.04} = 2.30$$

$P(T \leq 36) = P(z \leq C) = P(z \leq 2.30) = 0.9893$ (from normal distribution tables)

14.5 Fusion Engineering Inc. is designing a new product for welding two different alloys. The company has limited time and resources to complete the project. The following activity information is available.

Activity	Immediate Predecessor(s)	Normal Time (Days)	Normal Cost ($)	Crash Cost/Day ($)	Crash Time (Days)
A	–	4	400	125	3
B	A	5	800	200	4
C	A	4	520	150	2
D	B	3	600	225	2
E	C	3	255	100	2
F	B, E	4	600	175	2

(*a*) Draw the project network.

(*b*) Find the critical path.

(*c*) Find the project completion time and the corresponding cost.

(*d*) What is the total cost, if the project deadline is 13 days?

(*e*) Assume the project deadline to be 10 days. The company has to bear $170 for each day of delay. Find the optimal number of days to crash the project.

(*a*)

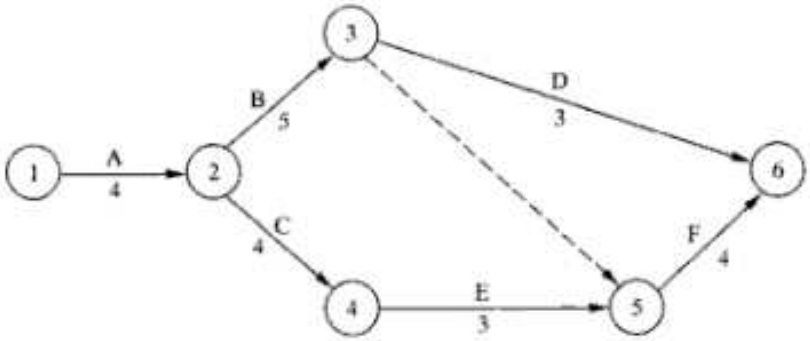

(*b*)

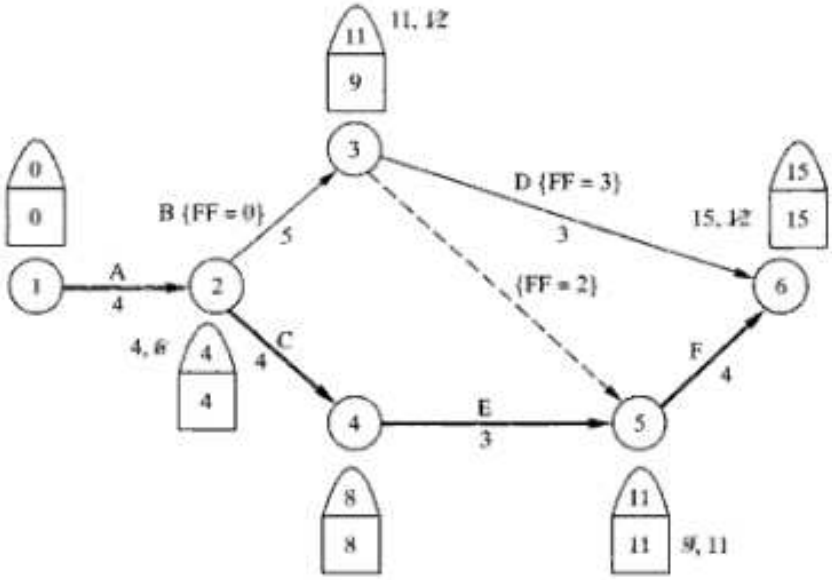

Critical path is A, C, E, F.

(c) Project completion time = 15

$$\text{Project cost} = 400 + 800 + 520 + 600 + 255 + 600 = 3175$$

(d) From the given data, construct the following crash time–cost table.

Activity (i, j)	Crash Limit $(D - D')$ Days	Crash Cost/Day (Given) \$
A (1, 2)	$4 - 3 = 1$	125
B (2, 3)	$5 - 4 = 1$	200
C (2, 4)	$4 - 2 = 2$	150
D (3, 6)	$3 - 2 = 1$	225
E (4, 5)	$3 - 2 = 1$	100
F (5, 6)	$4 - 2 = 2$	175

From the critical path calculations, we have the following information.

Activity (i, j)	A (1, 2)	B (2, 3)	C (2, 4)	D (3, 6)	E (4, 5)	F (5, 6)	Dummy (3, 5)
Critical	yes	–	yes	–	yes	yes	–
Free Float (FF)	–	0	–	3	–	–	2

Since the normal project completion time is 15 days and the required project completion time is 13 days, we have to crash one or more critical activities for a total of 2 days. The two lowest "crash cost per day" critical activities E and A have crash limits of 1 day each for a total of 2 days.

$$\text{reduction limit} = \min\{\text{crash limit, positive FF limit}\} = \min\{2, 2\} = 2$$

Hence, crash activities E and A by one day each.

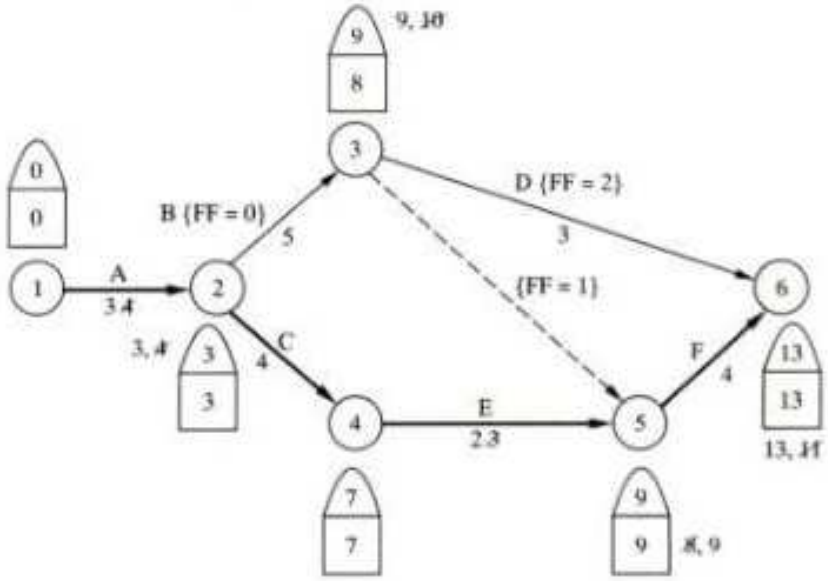

From the critical path calculations, we have the following information.

Critical path is still A, C, E, F.

Project completion time = 13 days

Project cost = 3175 + (1)(100) + (1)(125) = \$3400

Activity (i, j)	A (1, 2)	B (2, 3)	C (2, 4)	D (3, 6)	E (4, 5)	F (5, 6)	Dummy (3, 5)
Critical	yes	–	yes	–	yes	yes	–
Free Float (FF)	–	0	–	2	–	–	1

(*e*) Since the above project completion time is 13 days and the new project deadline is 10 days, we will try to crash the project for a total of 3 days. Since the crash limits for critical activities E and A are reached, consider critical activity C with the next lowest "crash cost per day" for crash. The length by which C can be reached is found as follows:

$$\text{reduction limit} = \min\{\text{crash limit, positive FF limit}\} = \min\{2, 1\} = 1$$

Hence, crash activity C by one day.

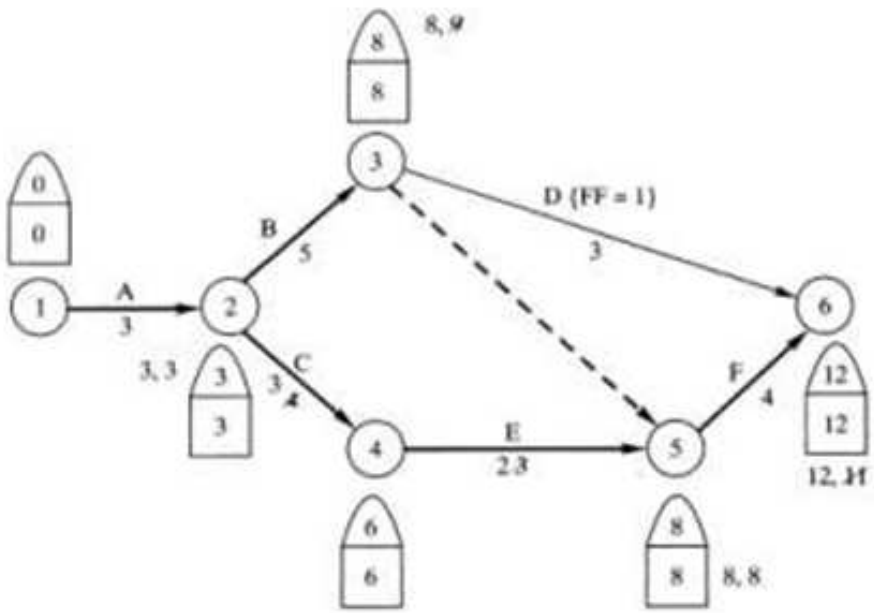

From the critical path calculations, we have the following information.

There are two critical paths: A, C, E, F (old) and A, B, F (new)

Project completion time = 12 days

Project cost = 3400 + (1)(150) = \$3550

Activity (i, j)	A (1, 2)	B (2, 3)	C (2, 4)	D (3, 6)	E (4, 5)	F (5, 6)	Dummy (3, 5)
Critical	yes	yes	yes	–	yes	yes	yes
Free Float (FF)	–	–	–	1	–	–	–

Note that after the previous step, A and E have reached their crash limits while C has 1 day remaining. As there are two critical paths, the possible crashes are shown below:

Activity	B, C	F
Crash Cost/Day (\$)	200, 150	200
Remaining Crash Limit (Days)	1, 1	1

Hence, one alternative is to reduce B and C.

$$\text{reduction limit} = \min\{\text{crash limit, positive FF limit}\} = \min\{1, 1\} = 1$$

Thus we can reduce B and C by 1 day each. However, the additional cost per day due to the crashing of B (\$200) and C (\$150) is \$350, which is more than the cost of delay, \$170.

The other alternative is to reduce F.

$$\text{reduction limit} = \min\{\text{crash limit, positive FF limit}\} = \min\{1, 1\} = 1$$

Thus we can reduce F by 1 day. However, the additional cost per day due to the crashing of F is \$200, which is more than the cost of delay, \$170.

Hence, the previous step provides the optimal crashing solution.

Project completion time = 12 days

Cost of delay = (delay time) × (cost of delay/day) = (12 − 10) × 170 = \$340.

Project cost = 3550 + 340 = \$3890.

14.6 An electrical engineering project has the following activity information:

Activity	Immediate Predecessor(s)	Normal Time (Days)	Normal Cost (\$)	Crash Time (Days)	Crash Cost (\$)
A	–	14	1000	10	1400
B	–	16	1200	11	1650
C	–	20	2000	14	2720
D	A, B, C	15	3000	10	4250

(*a*) Draw the network diagram. Find the critical path, total cost, and total time.

(*b*) If the budget limit is \$200 per day for any additional cost due to crashing, find the optimal project completion time and the corresponding cost.

(*c*) If the total budget for this project is \$8000 with no limit on daily spending, what is the shortest possible project time?

(*a*)

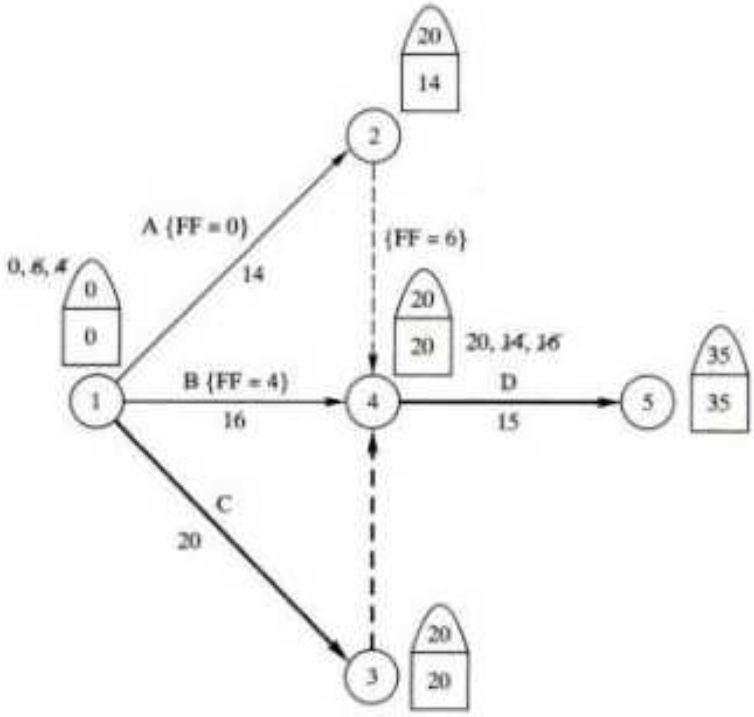

Critical path is C, D.
Project completion time = 35 days
Project cost = \$7200

(*b*) From the given data, construct the following crash time–cost table.

Activity (i, j)	Crash Limit (Days) $= (D - D')$	Crash Cost/Day (\$) $= (C' - C)/(D - D')$
A (1, 2)	$14 - 10 = 4$	$(1400 - 1000)/4 = 100$
B (1, 4)	$16 - 11 = 5$	$(1650 - 1200)/5 = 90$
C (1, 3)	$20 - 14 = 6$	$(2720 - 2000)/6 = 120$
D (4, 5)	$15 - 10 = 5$	$(4250 - 3000)/5 = 250$

From the critical path calculations, we have the following information.

Activity (i, j)	A (1, 2)	B (1, 4)	C (1, 3)	D (4, 5)	Dummy (2, 4)	Dummy (3, 4)
Critical	–	–	yes	yes	–	yes
Free Float (FF)	0	4	–	–	6	–

Since the critical activity C has the lowest "crash cost per day," it becomes the first candidate for crash. Note that the crash cost per day for C is \$120, which is less than the budget limit of \$200 per day for any additional cost due to crashing. The length by which C can be reduced is found as follows:

$$\text{reduction limit} = \min\{\text{crash limit, positive FF limit}\} = \min\{6, 4\} = 4$$

Hence, crash activity C by 4 days.

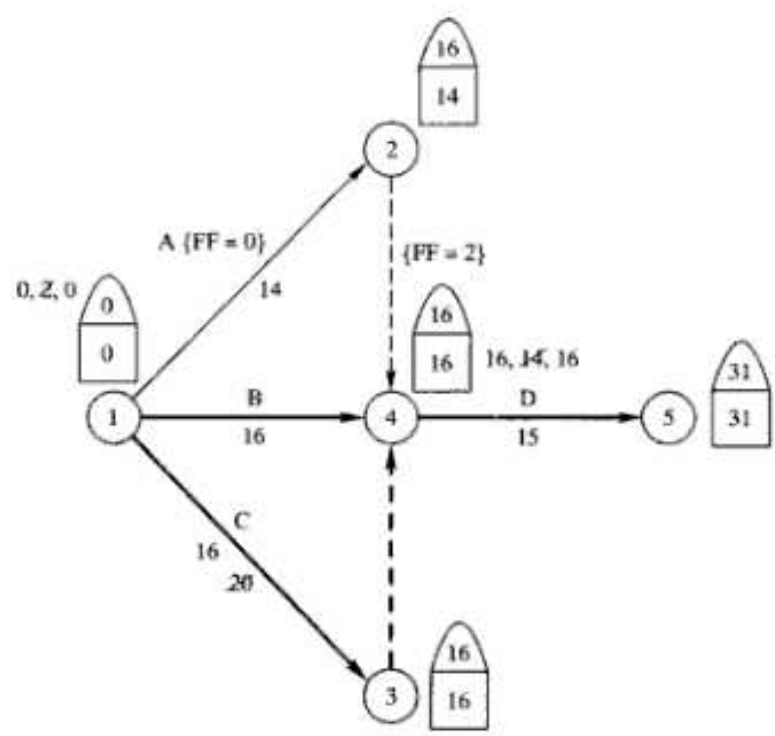

From the critical path calculations, we have the following information.

There are two critical paths: C, D (old) and B, D (new)
Project completion time = 31 days
Project cost = 7200 + (4)(120) = \$7680

Activity (i, j)	A (1, 2)	B (1, 4)	C (1, 3)	D (4, 5)	Dummy (2, 4)	Dummy (3, 4)
Critical	–	yes	yes	yes	–	yes
Free Float (FF)	0	–	–	–	2	–

Note that after the previous step, the remaining crash limit for C is 2 days. As there are two critical paths, the possible crashes are shown below:

Activity	B, C	D
Crash Cost/Day (\$)	90, 120	250
Remaining Crash Limit (Days)	5, 2	5

Hence one alternative is to reduce B and C.

Reduction limit = min {crash limit, positive FF limit} = min {2, 2} = 2

Thus we can reduce B and C by 2 days each. However, the additional cost per day due to the crashing of B (\$90) and C (\$120) is \$210 which exceeds the budget limit of \$200 per day for any additional cost due to crashing.

The other alternative is to reduce D.

Reduction limit = min {crash limit, positive FF limit} = min {5, 2} = 2

Thus, we can reduce D by 2 days. However, the additional cost per day due to the crashing of D is \$250 which exceeds the budget limit of \$200 per day for any additional cost due to crashing. Hence, the previous step provides the optimal crashing solution.

Project completion time = 31 days

Project cost = \$7680

(*c*)

Alternative 1a:
Crash activities B and C by 2 days each.
Project completion time = 29 days
Project cost = 7680 + (2)(210) = \$8100 > \$8000
Thus, Alternative 1a is infeasible.

Alternative 1b:
Crash activities B and C by one day each.
Project completion time = 30 days
Project cost = 7680 + (1)(210) = \$7890 < \$8000
Thus, Alternative 1b is feasible.

Alternative 2a:
Crash activity D by 2 days.
Project completion time = 29 days
Project cost = 7680 + (2)(250) = \$8180 > \$8000
Thus, Alternative 2a is infeasible.

Alternative 2b:
Crash activity D by one day.
Project completion time = 30 days
Project cost = 7680 + (1)(250) = \$7930 < 8000
Thus, Alternative 2b is feasible.

Of the two feasible alternatives 1b and 2b, alternative 1b is optimal, since it has lower project cost. The results of Part (c) are summarized in the following table.

Alternative	1a	1b	2a	2b
Crash Activity (Activities)	B and C	B and C	D	D
Crash Time (Days)	2 days each	1 day each	2 days	1 day
Project Completion Time (Days)	29	30	29	30
Project Cost (\$)	7680 + (1)(210) = 8100 > 8000	7680 + (2)(210) = 7890 < 8000	7680 + (2)(250) = 8180 > 8000	7680 + (1)(250) = 7930 < 8000
Feasible	–	yes	–	yes
Optimal	–	yes	–	–

Supplementary Problems

14.7 Develop a network diagram for a project having the following precedence relationships:

Activity	A	B	C	D	E	F	G	H	I	J	K
Immediate Predecessor(s)	–	–	A	A, B	C, D	D	E	E, F	G	H	I, J

14.8 Construct a network diagram for the project consisting of activities A, B, C, . . . , L described below:

Concurrent activities A and B begin the project;
Concurrent activities C and D succeed A;
Concurrent activities E and G succeed B;
Activity F succeeds both C and E;
Activity H succeeds both C and D;
Activities I and J succeed G;
Activity K succeeds H and F;
Activity L succeeds I and J;
Activities L and K complete the project.

14.9 Consider the project in Problem 14.7 with the following activity durations:

Activity	A	B	C	D	E	F	G	H	I	J	K
Duration (Days)	3	2	5	7	3	4	8	13	6	1	10

(*a*) Draw a CPM network diagram and find the critical path.

(*b*) The project must be completed in 30 days. Do you anticipate difficulty in meeting the deadline? Explain.

(*c*) Can activity H be delayed without delaying the project?

(*d*) Can activity E be delayed without delaying the project?

14.10 For the following arrow diagram identify the critical path and calculate the total and free floats for each activity.

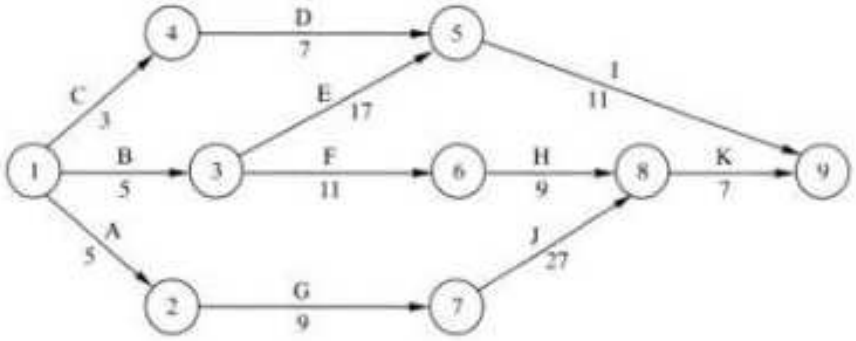

14.11 The software solution division at Mastek Inc. has been working on an application which on development would have a large market. In order to remain market leaders and innovators of new products, they have to complete this project as soon as possible. The division manager resorts to the use of PERT in the scheduling of the project activities. The following table depicts the information on the activities:

		Duration (Days)		
Activity	Immediate Predecessor(s)	Optimistic (*a*)	Most Likely (*m*)	Pessimistic (*b*)
A	–	2	3	4
B	A	2	4	6
C	A	4	5	12
D	A	1	3	5
E	B	2	2	2
F	B	3	6	9
G	C	5	7	15
H	E, G, D	4	8	12
I	D	6	15	18
J	E, F, G, D	3	4	5

(*a*) Find the critical path and the expected project completion time through a PERT network diagram.

(*b*) What is the probability that the project will be completed within 30 days?

14.12 Consider Problem 14.7. Suppose the activity durations are probabilistic as given in the table below:

Activity	Optimistic (a)	Most Likely (m)	Pessimistic (b)
A	1	3	5
B	1	2	3
C	3	5	13
D	4	7	10
E	2	3	4
F	1	4	13
G	4	8	12
H	6	13	14
I	2	6	10
J	1	1	1
K	9	10	17

(*a*) Calculate the expected time and variance for each activity.

(*b*) Find the critical path.

(*c*) Determine the expected project completion time.

(*d*) The scheduled completion date for the project is Feb. 5. If you plan to start the project on Jan. 1, find the probability that you will complete the project by then. Should you start the project earlier?

14.13 Consider a construction project with the following data on precedence relationships, durations, and costs:

Activity	Immediate Predecessor(s)	Normal Time (Days)	Normal Cost ($)	Crash Time (Days)	Crash Cost ($)
A	–	6	120	4	170
B	–	4	120	2	220
C	A	3	195	2	270
D	A	4	320	2	520
E	B, C	7	700	4	1075
F	D, E	5	650	2	1100
G	E	10	1600	6	2300

F and G are the terminal activities of the project.

(*a*) Find the critical path.

(*b*) Find the project completion time and the corresponding cost.

(*c*) Suppose it is required to complete the project in 22 days. Find which activities to crash and by how much, to yield the minimum project cost.

14.14 Consider the following information for a manufacturing systems project:

Activity	Immediate Predecessor(s)	Normal Time (Weeks)	Crash Time (Weeks)	Normal Cost ($)	Crash Cost ($)
A	–	12	10	50000	90000
B	A	10	8	140000	170000
C	B	12	9	120000	180000
D	A	9	8	60000	70000
E	D	12	10	70000	95000
F	C, E	5	5	80000	80000
G	F	6	6	60000	60000

(*a*) Draw the network diagram and find the critical path.

(*b*) Find the project completion time and the corresponding cost.

(*c*) If the company wants to complete the project in 41 weeks, find the optimal crash time and cost.

Chapter 15

Inventory Models

INVENTORY

Inventory is an idle stock of items for future use. The two key issues in inventory models are the quantity (how much) and the timing (when) of the orders. The objective is to minimize the total inventory cost consisting of carrying (holding) cost and ordering cost.

An inventory model may be of independent demand or dependent demand. In an independent demand model, the demand for an item is independent of the demands for other items in inventory. In a dependent demand model, the demand for an item is dependent upon the demands for other items in inventory. Usually end-products (finished goods) are examples of independent demand inventories while assembly-components are examples of dependent demand inventories. In this chapter, we will deal with independent demand inventory systems.

FIXED ORDER QUANTITY MODELS

In this type of model, the quantity (how much) of the order is fixed while the timing (when) of the order varies.

Determination of fixed order quantities

We will consider optimal order quantities, known as economic order quantities (EOQ), for the following three cases:

(i) EOQ for purchasing
(ii) EOQ for production
(iii) EOQ for quantity discounts

(i) *Economic order quantity (EOQ) for purchasing*
In this model, *total annual inventory cost* (TC) is determined as

$$TC = \text{annual carrying cost} + \text{annual ordering cost} = (Q/2)C + (D/Q)S$$

where D = annual demand (units per year)

Q = quantity ordered (units per order)

C = unit carrying cost per year

= holding rate (R) × unit acquisition cost or unit price (P)

S = ordering cost (dollars per order)

TC = total annual inventory cost (dollars per year)

To find EOQ, set the derivative of TC with respect to Q, equal to zero and solve for Q:

$$EOQ = Q^* = \sqrt{(2DS)/C} \tag{1}$$

Number of orders per year (frequency of ordering) $= F = D/Q^*$.

Example 15.1 Given demand $D = 420$ items per year; ordering cost $S = \$45$; and carrying cost $C = \$15$ per unit; find EOQ and F.

$$Q^* = \sqrt{(2DS)/C} = \sqrt{[2(420)(45)]/15} = 50.20 \text{ units}$$

$$F = D/Q^* = 420/50.11 = 8.37$$

(ii) *Economic order quantity (EOQ) for production*
In this model, the *annual total inventory cost* is determined as

$$TC = \text{annual carrying cost} + \text{annual setup cost} = (Q/2)[(p-d)/p]C + (D/Q)S$$

where d = demand rate (units per time period)

p = production rate (units per time period)

S = setup cost (\$)

$(Q/2)[(p-d)/p]$ = average inventory level (units)

To determine EOQ, set the derivative of TC with respect to Q, equal to zero and solve for Q

$$EOQ = Q^* = \sqrt{[(2DS)/C][p/(p-d)]} \tag{2}$$

Example 15.2 Given annual demand $D = 20\,000$ units; daily production rate $p = 160$ units; daily usage rate $d = 80$ units; setup cost $S = \$120$; unit holding cost per year $C = 20\%$ of unit manufacturing cost per year \$4.00; find EOQ:

$$Q^* = \sqrt{[2(20\,000)(120)/(0.20)(4.00)][160/(160-80)]} = 3464.10 \text{ units}$$

Assuming the production rate p is larger than the demand rate d, *maximum inventory* I_m is computed as follows:

$$I_m = (p-d)\frac{Q^*}{p} = \sqrt{\frac{2DS}{C}\frac{p-d}{p}},$$

where Q/p = length of production run or production run time.

Then annual total inventory cost is determined as

$$TC = \frac{I_m}{2}C + \frac{D}{Q^*}S$$

(iii) *Economic order quantity (EOQ) for quantity discounts*

In the previous two cases, the unit purchasing cost or the unit production cost (P) is constant and hence is not considered. However, if quantity discounts or price breaks are offered for large order quantities, P will depend upon order quantity. Thus in this model, P should also be considered in the total cost equation as follows:

$$\text{TC} = \text{annual carrying cost} + \text{annual ordering cost} + \text{annual acquisition cost}$$

For instantaneous delivery, TC is given by

$$TC = (Q/2)C + (D/Q)S + (D)P$$

and the EOQ is determined by formula (1).

For gradual delivery, TC is given by

$$TC = (Q/2)[(p - d)/p]C + (D/Q)S + (D)P$$

and the EOQ is determined by formula (2).

The price reductions are usually offered in a series of ranges, as illustrated in the price list of the following example.

Example 15.3

Order quantity	Price per unit (P)
1 to 119	\$42
120 to 169	41
170+	40

The following approach is recommended in determining the order quantity with the lowest annual total cost:

STEP 1: Compute the EOQ using each of the unit prices.

STEP 2: Determine which EOQs of Step 1 are feasible.

STEP 3: The feasible EOQ corresponding to the lowest unit price is the admissible EOQ.

STEP 4: Compute TCs for the admissible EOQ and for quantities at lower unit price breaks.

STEP 5: The quantity with the lowest TC is the optimum.

Determination of order points (OP)

The above EOQ models dealt with one key issue of inventory models, namely "how much" to order. The other issue of "when" to order will be handled by the OP models. It is time to order when the inventory level falls to OP, which is determined by

$$\text{OP} = \text{EDDLT} + \text{SS}$$

where

EDDLT = expected demand during lead time

Lead time = time between points of order and receipt

SS = Safety Stock = Buffer stock to prevent stockouts, when actual demand exceeds expected demand

Since it is difficult to evaluate the stockout cost, we will set the order point at some specified customer service level, which is the probability that a stockout will not occur.

There are two types of demand during lead time (DDLT) distributions: a discrete DDLT distribution for a small number of units and a continuous DDLT distribution for a large number of units. Solved Problem 15.11 exemplifies the simple method of finding the order point and safety stock for a discrete DDLT distribution, based on sufficient past data. Also, a Poisson distribution may be assumed to describe a discrete DDLT distribution, as illustrated in the Solved Problem 15.12.

On the other hand, for a continuous DDLT random variable, we assume a normal distribution. The order point is given by

$$\text{OP} = \text{EDDLT} + Z\sigma_{dl}$$

where EDDLT = mean of demand during lead time

Z = number of standard deviations from the mean

$\sigma_{d\ell}$ = standard deviation of demand during lead time

In developing OP models, we assume the lead time to be *stable* without *seasonal* patterns. There are three cases which contribute to variability of demand during lead time: variable demand (with constant lead time); variable lead time (with constant periodic demand); variable demand and variable lead time.

Case 1: Demand is variable and lead time is constant:

$$\text{OP} = \bar{d}\ell + Z\sigma_d\sqrt{\ell}$$

where

$\bar{d}$ = average periodic demand

ℓ = lead time duration

σ_d = standard deviation of periodic demand

$\sigma_d\sqrt{\ell} = \sigma_{d\ell}$, since the standard deviation of demand during lead time is the square root of $\sigma_d^2(\ell)$ which is the sum of ℓ periodic demand variances.

Case 2: Demand is constant and lead time is variable:

$$\text{OP} = d\bar{\ell} + Zd\sigma_\ell$$

where $\bar{\ell}$ = average lead time

σ_ℓ = standard deviation of the lead time

d = periodic demand

Case 3: Both demand and lead time are variable:

$$\text{OP} = \bar{d}\bar{\ell} + Z\sqrt{\sigma_d^2\bar{\ell} + \bar{d}^2\sigma_\ell^2}$$

Inventory shortage

Since shortage cost is a function of the shortage amount, it is necessary to know the average number of units short. Assume that the demand during lead time has a normal distribution. Then,

$$E(n) = E(Z)\sigma_{d\ell}$$

where $E(n)$ = average number of units short during lead time

$E(Z)$ = standardized number of units short (from unit normal loss function tables)

$\sigma_{d\ell}$ = standard deviation of demand during lead time.

Average number of units short per year $E(N)$ is determined as follows:

$$E(N) = E(n)(D/Q)$$

FIXED ORDER PERIOD MODELS

So far we dealt with fixed order quantity models based on EOQ and OP concepts, that is, to order the amount of EOQ when the inventory level hits the amount of OP. In such models, the order quantity

is fixed while the order interval varies. However, the fixed order period models deal with ordering varied amounts at fixed intervals of time. Consider the case where demand is variable and lead time is constant. Assume that the demand follows a normal distribution. Then the order quantity is given by

$$Q^* = \bar{d}(T + \ell) + Z\sigma_d\sqrt{T + \ell} - I$$

where σ_d = standard deviation of demand

T = fixed order period

ℓ = lead time duration

I = amount of inventory on hand

SINGLE PERIOD MODELS

The above fixed order quantity models and fixed order period models are useful when the remaining inventory of one order cycle can be forwarded to the next order cycle. However, some items such as perishable commodities and dated materials cannot be forwarded to the next order cycle or face a penalty for carryover. The objective of the single period model is to minimize the costs of overstock and understock. This is achieved when the order quantity satisfies the following optimum service level equation:

$$\text{Service level} = C_U/(C_U + C_O)$$

where C_U = understock cost = revenue/unit − cost/unit

C_O = overstock cost = cost/unit + carrying cost/unit − salvage value/unit

Solved Problems

15.1 Consider an inventory system with the following data: annual demand for a particular item is 1500 units; carrying cost of one unit is \$0.15; ordering cost is \$15. Determine: (*a*) economic order quantity; (*b*) number of orders per year; (*c*) total inventory cost per year.

Given: $D = 1500$; $S = \$15$; and $C = \$0.15$.

(*a*) Economic order quantity:

$$Q^* = \sqrt{\frac{2DS}{C}} = \sqrt{\frac{2(1500)15}{0.15}} = 547.72 \text{ units}$$

(*b*) Number of orders per year:

$$F = D/Q^* = 1500/547.72 = 2.74$$

(*c*) Total inventory cost per year:

$$TC = \frac{Q^*}{2}C + \frac{D}{Q^*}S = \frac{547.72}{2}0.15 + \frac{1500}{547.72}15 = 41.08 + 41.08 = \$82.16$$

15.2 The ABC Retail Company has the following data available for one of its items: $D = 10\,000$ units; $S = \$20.00$; $C = 25\%$ of the acquisition cost \$25.00. Find: (*a*) economic order quantity; (*b*) number of orders per year; (*c*) total inventory cost.

Given: $D = 10\,000$; $S = \$20.00$; $C = (0.25 \times 25) = \$6.25$.

(*a*) Economic order quantity:

$$Q^* = \sqrt{\frac{2DS}{C}} = \sqrt{\frac{2(10\,000)20}{6.25}} = 252.98 \text{ units}$$

(*b*) Number of orders per year: $F = D/Q^* = 10\,000/252.98 = 39.53$

(*c*) Total inventory cost:

$$TC = \frac{Q^*}{2}C + \frac{D}{Q^*}S = \frac{252.98}{2}6.25 + \frac{10\,000}{252.98}20 = 790.56 + 790.58 = \$1581.14$$

15.3 Americhem Corporation supplies West Engineering Company with a chemical at the rate of 5500 barrels per day and a price of \$19.10 per barrel. West Engineering uses the chemical at the rate of 2200 barrels per day and 550 000 barrels per year. The ordering cost is \$3250 per year and the holding cost is 25% of the price per barrel per year. Find: (*a*) EOQ; (*b*) TC at EOQ; (*c*) number of production days per order; (*d*) maximum storage capacity for the chemical.

Given: $D = 550\,000$; $S = \$3250$; $C = (0.25)(19.10)$; $p = 5500$; $d = 2200$.

(*a*) Economic order quantity:

$$Q^* = \sqrt{\frac{2DS}{C}\frac{p}{p-d}} = \sqrt{\frac{2(550\,000)3250}{(0.25)(19.10)}\frac{5500}{(5500-2200)}} = 35\,324.47 \text{ barrels}$$

(*b*) Annual total inventory cost:

$$\begin{aligned} TC &= \frac{Q^*}{2}\frac{p-d}{p}C + \frac{D}{Q^*}S \\ &= \frac{35\,324.47}{2}\frac{(5500-2200)}{5500}(0.25)(19.10) + \frac{550\,000}{35\,324.47}3250 \\ &= 50\,602.30 + 50\,602.30 = \$101\,204.60 \end{aligned}$$

(*c*) Number of production days per order: $Q^*/d = (35\,324.47)/(2200) = 16.1$ days

(*d*) Maximum storage capacity:

$$I_m = (p-d)(Q^*/p) = (5500-2200)(35\,324.47/5500) = 21\,194.68$$

15.4 Lincoln Electronics produces 300 transistors per day, which go into inventory. It supplies 150 transistors per day to Murphy Radios. The annual demand is 37 500. The inventory holding cost is \$0.25 per transistor per year and the setup cost per production run is \$200. Find: (*a*) EOQ; (*b*) production run length; (*c*) number of production runs per year; (*d*) maximum inventory level.

Given: $D = 37\,500$; $p = 300$; $d = 150$; $S = \$200$; $C = \$0.25$.

(*a*) Economic production quantity:

$$Q^* = \sqrt{\frac{2DS}{C}\frac{p}{p-d}} = \sqrt{\frac{2(37\,500)200}{0.25}\frac{300}{(300-150)}} = 10\,954.45 \text{ units}$$

(*b*) Run length: $Q^*/p = 10\,954.45/300 = 36.51$ days

(*c*) Number of runs per year: $D/Q^* = 37\,500/10\,954.45 = 3.42$

(*d*) Maximum inventory level:

$$I_m = \sqrt{\frac{2DS}{C}\frac{p-d}{p}} = \sqrt{\frac{2(37\,500)(200)}{0.25}\frac{(300-150)}{300}} = 5477.23 \text{ units}$$

15.5 Precision Tools Inc. sells pistons to Best Motor Co. as per following price list:

Order quantity	Price per unit (P)
1–299	\$2.50
300–619	2.30
620+	2.00

The annual demand is estimated to be 15 000 pistons per year. The carrying costs are 25% of the unit price and the ordering costs are \$6.50. Assume instantaneous delivery. Find: (*a*) EOQ; (*b*) optimum TC; (*c*) time between orders.

Given: $D = 15\,000$; $S = \$6.50$; $C = (0.25)(P)$.
The EOQ is computed for each unit price:

$$Q^*_{(2.50)} = \sqrt{\frac{2DS}{C}} = \sqrt{\frac{2(15\,000)6.50}{(0.25)(2.50)}} = 558.57 \text{ pistons (infeasible)}$$

$$Q^*_{(2.30)} = \sqrt{\frac{2DS}{C}} = \sqrt{\frac{2(15\,000)6.50}{(0.25)(2.30)}} = 582.35 \text{ pistons (feasible)}$$

$$Q^*_{(2.00)} = \sqrt{\frac{2DS}{C}} = \sqrt{\frac{2(15\,000)6.50}{(0.25)(2.00)}} = 624.50 \text{ pistons (feasible)}$$

(*a*) The feasible EOQ of 624.50, corresponding to the lowest unit price of \$2.00, is the admissible EOQ. Since there is no lower unit price break, the optimal quantity is 624.50.

(*b*) The corresponding optimum TC is found as follows:

$$TC = \frac{Q^*}{2}C + \frac{D}{Q^*}S + (D)P$$

$$TC_{(2.00)} = \frac{624.50}{2}(0.25)(2.00) + \frac{15\,000}{624.50}6.50 + (15\,000)2.00 = \$30\,312.25$$

(*c*) Time between orders $= Q^*/D = 624.49/15\,000 = 0.0416$ year $\approx$ 15 days.

15.6 The Princeton Soup Company buys 90 000 containers each year from the Trenton Can Company. The ordering cost is \$90. The carrying cost per container per year is assumed to be 20% of the unit price. The discount price schedule is as follows:

Order quantity	Price per unit (P)
1 to 10 000	\$0.45
10 000 to 20 000	0.38
20 000+	0.35

Assuming instantaneous delivery, find: (*a*) EOQ; (*b*) optimum TC; (*c*) number of orders per year; (*d*) time between orders.

Given: $D = 90\,000$; $S = \$90.00$; $C = (0.20)(P)$.
The EOQ is computed for each unit price:

$$Q^*_{(0.45)} = \sqrt{\frac{2DS}{C}} = \sqrt{\frac{2(90\,000)90}{(0.20)(0.45)}} = 13\,416.41 \text{ containers (infeasible)}$$

$$Q^*_{(0.38)} = \sqrt{\frac{2DS}{C}} = \sqrt{\frac{2(90\,000)90}{(0.20)(0.38)}} = 14\,599.93 \text{ containers (feasible)}$$

$$Q^*_{(0.35)} = \sqrt{\frac{2DS}{C}} = \sqrt{\frac{2(90\,000)90}{(0.20)(0.35)}} = 15\,212.78 \text{ containers (infeasible)}$$

The key quantities to examine are 14 599.93 and 20 000.

$$TC = \frac{Q^*}{2}C + \frac{D}{Q^*}S + (D)P$$

$$TC_{(0.38)} = \frac{14\,599.93}{2}(0.2)(0.38) + \frac{90\,000}{14\,599.93}90 + (90\,000)0.38 = \$35\,309.60$$

$$TC_{(0.35)} = \frac{20\,000}{2}(0.2)(0.35) + \frac{90\,000}{20\,000}90 + (90\,000)0.35 = \$32\,605.00$$

The lowest TC is \$32 605.00 corresponding to the unit price of \$0.35.

(*a*) EOQ = 20 000
(*b*) Optinum TC = \$32 605.00
(*c*) Number of orders = $D/Q^* = 90\,000/20\,000 = 4.5$
(*d*) Time between orders = $Q^*/D = 20\,000/90\,000 = 0.22$ year ≈ 80 days.

15.7 The Wizard Computers, Inc. purchases 5000 hard drives per year for use in its computers. Each order costs \$70.00. The inventory holding cost is 25% of the unit price. The supplier has provided the following price list:

Order quantity	Price per unit (P)
1 to 499	\$50.00
500 to 649	45.00
650+	42.50

Assuming instantaneous delivery, find (*a*) optimal order quantity; (*b*) optimal TC.

Given: $D = 5000$; $S = \$70.00$; $C = (0.25)(P)$.
The EOQ is computed for each unit price:

$$Q^*_{(50.00)} = \sqrt{\frac{2DS}{C}} = \sqrt{\frac{2(5000)70}{(0.25)(50.00)}} = 236.64 \text{ units (feasible)}$$

$$Q^*_{(45.00)} = \sqrt{\frac{2DS}{C}} = \sqrt{\frac{2(5000)70}{(0.25)(45.00)}} = 249.44 \text{ units (infeasible)}$$

$$Q^*_{(42.50)} = \sqrt{\frac{2DS}{C}} = \sqrt{\frac{2(5000)70}{(0.25)(42.50)}} = 256.68 \text{ units (infeasible)}$$

The key quantities to examine are 236.64, 500, and 650, at unit prices of \$50, \$45, and \$42.50 respectively.

$$TC = \frac{Q^*}{2}C + \frac{D}{Q^*}S + (D)P$$

$$TC_{(50.00)} = \frac{236.64}{2}(0.25)(50) + \frac{5000}{236.64}70 + (5000)(50) = \$252\,958.04$$

$$TC_{(45.00)} = \frac{500}{2}(0.25)(45) + \frac{5000}{500}70 + (5000)(45) = \$228\,512.50$$

$$TC_{(42.50)} = \frac{650}{2}(0.25)(42.50) + \frac{5000}{650}70 + (5000)(42.50) = \$216\,491.59$$

The lowest TC is \$216 491.59 corresponding to the unit price of \$42.50.

(*a*) Optimal order quantity = 650 units
(*b*) Optimum TC = \$216 491.59.

15.8 The Edison Electronics Warehouse stocks tool kits for personal computers. One of the popular kits, "Basic," has an annual demand of 10 000. The ordering costs are \$150.00 and the carrying costs are 25% of the unit price. The price quotation from the supplier is given below:

Order quantity	Price per unit (P)
1 to 899	\$15.50
900 to 1499	14.00
1500 +	13.50

Find (*a*) EOQ; (*b*) optimal TC.

Given: $D = 10\,000$; $S = \$150.00$; $C = (0.25)(P)$.
The EOQ is computed for each unit price:

$$Q^* = \sqrt{\frac{2DS}{C}}$$

$$Q^*_{(15.50)} = \sqrt{\frac{2(10\,000)150}{(0.25)(15.50)}} = 879.88 \text{ (feasible)}$$

$$Q^*_{(14)} = \sqrt{\frac{2(10\,000)150}{(0.25)(14)}} = 925.82 \text{ (feasible)}$$

$$Q^*_{(13.50)} = \sqrt{\frac{2(10\,000)150}{(0.25)(13.50)}} = 942.81 \text{ (infeasible)}$$

The key quantities to examine are 925.82 and 1500, at unit prices of \$14.00 and \$13.50.

$$TC = \frac{Q^*}{2}C + \frac{D}{Q^*}S + (D)P$$

$$TC_{(14)} = \frac{925.82}{2}(0.25)(14) + \frac{10\,000}{925.82}(150) + (10\,000)(14) = \$143\,240.37$$

$$TC_{(13.50)} = \frac{1500}{2}(0.25)(13.5) + \frac{10\,000}{1500}(150) + (10\,000)(13.50) = \$138\,531.25$$

The lowest TC is \$138 531.25 corresponding to the unit price of \$13.50.

(*a*) EOQ = 1500 units
(*b*) Optimal TC = \$138 531.25.

15.9 Pertech Computers Inc. needs 50 000 CPUs for its computers annually, and uses them at the rate of 350 per day. The ordering costs are \$550 and the carrying costs are 40% of the unit price. Hilda Business Machines supplies the CPUs at the rate of 650 per day as per the following price list:

Order quantity	Price per unit (P)
1 to 2999	\$20.00
3000 to 3999	19.60
4000+	19.40

Assuming gradual delivery, find: (*a*) EOQ; (*b*) optimum TC; (*c*) number of orders per year; (*d*) time between orders; (*e*) maximum inventory level.

Given: $D = 50\,000$; $S = \$550$; $C = (0.40)(P)$; $p = 650$; $d = 350$.
The EOQ is computed for each unit price:

$$Q^* = \sqrt{\frac{2DS}{C}\frac{p}{p-d}}$$

$$Q^*_{(20.00)} = \sqrt{\frac{2(50\,000)550}{(0.40)(20.00)}\frac{650}{(650-350)}} = 3859.51 \text{ CPUs (infeasible)}$$

$$Q^*_{(19.60)} = \sqrt{\frac{2(50\,000)550}{(0.40)(19.60)}\frac{650}{(650-350)}} = 3898.70 \text{ CPUs (feasible)}$$

$$Q^*_{(19.40)} = \sqrt{\frac{2(50\,000)550}{(0.40)(19.40)}\frac{650}{(650-350)}} = 3918.74 \text{ CPUs (infeasible)}$$

The key quantities to examine are: 3898.70 and 4000.

$$TC = \frac{Q^*}{2}\frac{p-d}{p}C + \frac{D}{Q^*}S + (D)P$$

$$TC_{(19.60)} = \frac{3898.70}{2}\frac{(650-350)}{650}(0.40)(19.60) + \frac{50\,000}{3898.70}550 + (50\,000)19.60$$

$$= \$994\,107.28$$

$$TC_{(19.40)} = \frac{4000}{2}\frac{(650-350)}{650}(0.40)(19.40) + \frac{50\,000}{4000}550 + (50\,000)19.40$$

$$= \$984\,038.07$$

The lowest TC is \$984 038.07 corresponding to the unit price of \$19.40.

(*a*) EOQ = 4000 CPUs
(*b*) Minimum TC = \$984 038.07.

(*c*) Number of orders per year:

$$D/Q^* = 50\,000/4000 = 12.5 \text{ orders/year}$$

(*d*) Time between orders:

$$Q^*/D = 4000/50\,000 = 0.08 \text{ year} \approx 29 \text{ days}$$

(*e*) Maximum inventory level:

$$I_m = \sqrt{\frac{2DS}{C}\frac{p-d}{p}} = \sqrt{\frac{2(50\,000)550}{(0.40)(19.40)}\frac{(650-350)}{650}} = 1808.65 \text{ CPUs}$$

The lowest TC is \$32 605.00 corresponding to the unit price of \$0.35.

15.10 In Problem 15.7, assume gradual delivery. If daily supply and usage rates are 30 and 20 respectively, find (*a*) optimal order quantity; (*b*) optimal TC.

Given: $D = 5000$; $S = \$70$; $C = (0.25)(P)$; $p = 30$; $d = 20$.
The EOQ is computed for each unit price:

$$Q^* = \sqrt{\frac{2DS}{C}\frac{p}{p-d}}$$

$$Q^*_{(50.00)} = \sqrt{\frac{2(5000)70}{(0.25)(50.00)}\frac{30}{(30-20)}} = 409.88 \text{ (feasible)}$$

$$Q^*_{(45.00)} = \sqrt{\frac{2(5000)70}{(0.25)(45)}\frac{30}{(30-20)}} = 432.05 \text{ (infeasible)}$$

$$Q^*_{(42.50)} = \sqrt{\frac{2(5000)70}{(0.25)(42.50)}\frac{30}{(30-20)}} = 444.58 \text{ (infeasible)}$$

The key quantities to examine are: 409.88, 500, and 650 at unit prices of \$50, \$45, and \$42.50 respectively.

$$TC = \frac{Q^*}{2}\frac{p-d}{p}C + \frac{D}{Q^*}S + (D)P$$

$$TC_{(50.00)} = \frac{409.88}{2}\frac{(30-20)}{30}(0.25)(50) + \frac{5000}{409.88}(70) + (5000)(50) = \$251\,707.83$$

$$TC_{(45.00)} = \frac{500}{2}\frac{(30-20)}{30}(0.25)(45.00) + \frac{5000}{500}(70) + (5000)(45) = \$226\,637.50$$

$$TC_{(42.50)} = \frac{650}{2}\frac{(30-20)}{30}(0.25)(42.50) + \frac{5000}{650}(70) + (5000)(42.50) = \$214\,189.50$$

The lowest TC is \$214 189.50 corresponding to the unit price of \$42.50.

(*a*) Optimal order quantity = 650 units
(*b*) Optimal TC = \$214 189.50.

15.11 The CDM Manufacturing Company produces and stocks item XYZ to satisfy future customer demands. The following historical data are available: average demand per day is 16.4 units, average production lead time is 6 days, and the frequency distribution of actual DDLT is given below.

Adult DDLT	Frequency
61–70	0
71–80	9
81–90	11
91–100	7
101–110	5
111–120	4
121–130	3

The company desires a 90% service level during lead time. Find: (*a*) order point; (*b*) safety stock.

(i) Construct the cumulative probability table:

Actual DDLT	Probability	Service Level (Cumulative Probability)
61–70	0	0
71–80	9/39 = .231	.231
81–90	11/39 = .282	.513
91–100	7/39 = .179	.692
101–110	5/39 = .128	.820
111–120	4/39 = .103	.923
121–130	3/39 = .077	1.000

(ii) Draw the cumulative probability graph (Fig. 15-1).

(*a*) From the graph, OP = 113 units (corresponding to a 90% service level)

(*b*) SS = OP − EDDLT = OP − (average daily demand) (average lead time)
= 113 − (16.0)(6) = 17 units

15.12 The demand during lead time (DDLT) for automobile bearings at the Madison Manufacturing Company follows a Poisson distribution with a mean of 3.2. Find the order point for a service level of 99%.

From Poisson distribution tables, the cumulative probabilities for a mean of 3.2 are given below:

	DDLT										
	0	1	2	3	4	5	6	7	8	9	10
Mean 3.2	0.041	0.171	0.380	0.603	0.781	0.895	0.955	0.983	0.994	0.998	1.00

To assure a service level of 99%, OP = 8 (which gives an actual service level of 99.4%).

15.13 Based on past experience, the management of Star Sports Stadium uses the normal distribution (mean = 100; standard deviation = 20) to describe the lead-time demand for a new brand of beverage bottles. Find the order point for a service level of 90%.

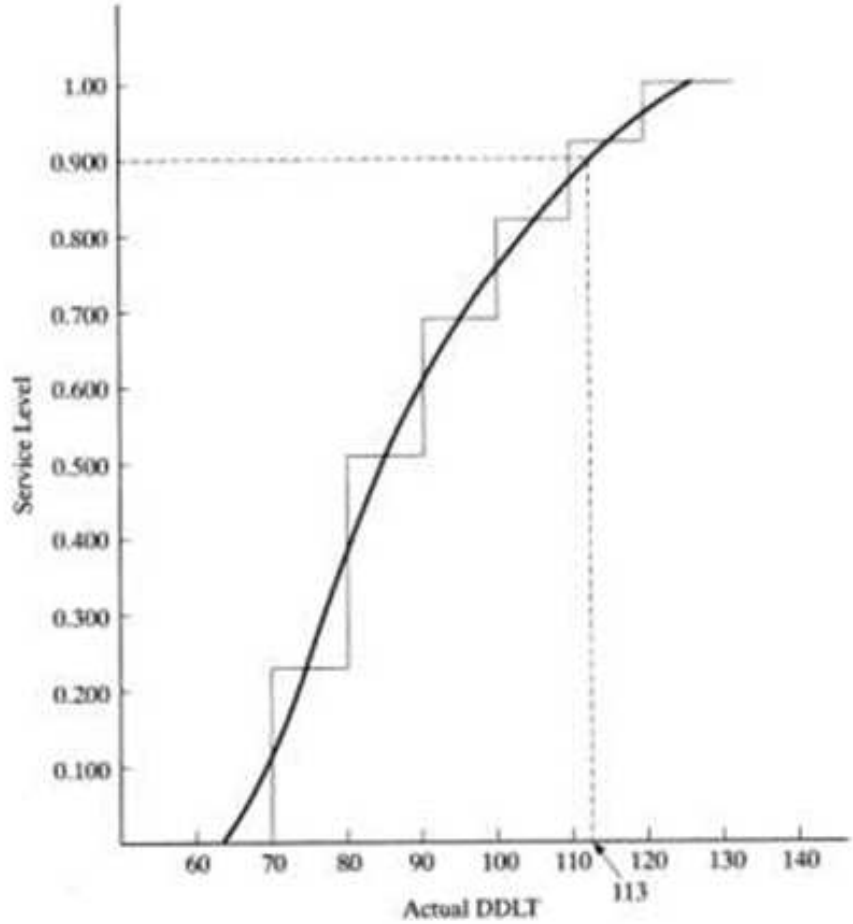

Fig. 15-1

Given: EDDLT = 100 bottles; $\sigma_{d\ell}$ = 20 bottles

Z = 1.28 for a service level of 0.90 (from unit normal distribution tables)

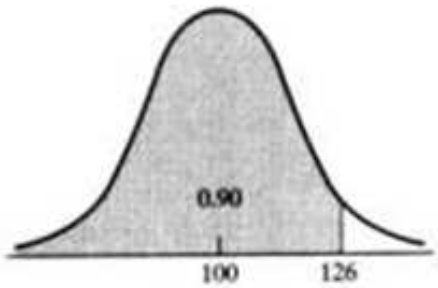

Fig. 15-2

$$\text{OP} = \text{EDDLT} + Z\sigma_{d\ell} = 100 + 1.28(20) = 126 \text{ bottles (Fig. 15-2)}$$

15.14 The daily demand for beer at the Brown Bottle Pub follows a normal distribution with a mean of 50 liters and a standard deviation of 15 liters. The lead time is 10 days. For a desired service level of 95%, find: (*a*) order point; (*b*) safety stock.

Given: $\bar{d}$ = 50; σ_d = 15; and ℓ = 10; Z = 1.65 for a service level of 0.95 (from unit normal distribution tables)

In this problem, demand is variable and lead time is constant.

$$OP = \bar{d}\bar{\ell} + Z\sigma_d\sqrt{\ell} = (50)(10) + (1.65)(15)(\sqrt{10}) = 578.27 \text{ liters (Fig. 15-3)}$$

$$SS = Z\sigma_d\sqrt{\ell} = 78.27 \text{ liters}$$

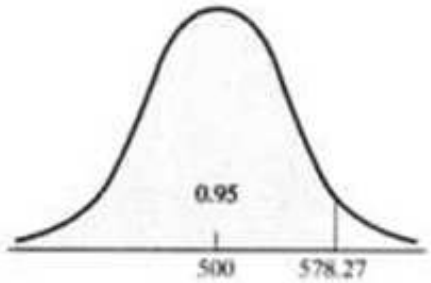

Fig. 15-3

15.15 The daily demand for a plumbing part follows a normal distribution with a mean of 20 units and a standard deviation of 5 units. If the lead time is a constant 1 week and the OP is 160 units, find the stockout probability during lead time.

Given: $OP = 160$; $\bar{d} = 20$; $\sigma_d = 5$; $\ell = 7$ days.
In this problem, demand is variable and lead time is constant.

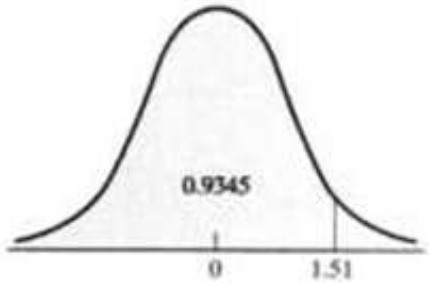

Fig. 15-4

$$OP = \bar{d}\ell + Z\sigma_d\sqrt{\ell}$$

Substituting, $160 = (20)(7) + (Z)(5)(\sqrt{7})$, we obtain $Z = 1.51$.
From unit normal distribution tables, the service level $= 0.9345$ for $Z = 1.51$ (Fig. 15-4).
Hence, the stockout probability during lead time $= 1 - 0.9345 = 0.0655$.

15.16 The daily demand for raw material for an automatic machine is a constant 50 units. The lead time follows a normal distribution with a mean of 8 days and a standard deviation of 2 days. Find the OP for a service level of 95%.

Given: $d = 50$; $\bar{\ell} = 8$; $\sigma_\ell = 2$; and $Z = 1.65$ for a service level of 0.95 (from unit normal distribution tables).
In this problem, demand is constant and lead time is variable.

$$OP = d\bar{\ell} + Zd\sigma_\ell$$

$$= 50(8) + 1.65(50)2 = 565 \text{ units (Fig. 15-5)}$$

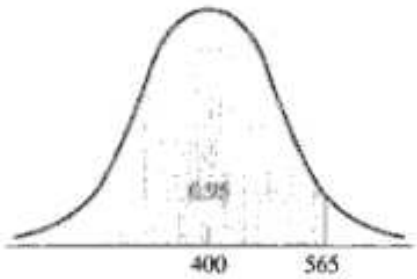

Fig. 15-5

15.17 The daily demand for cheeseburgers at Burger Barn follows a normal distribution with a mean of 1000 and a standard deviation of 100. The lead time is also described by a normal distribution with a mean of 8 days and a standard deviation of 2 days. Find the OP for a service level of 96%.

Given: $\bar{d} = 1000$; $\sigma_d = 100$; $\bar{\ell} = 8$; $\sigma_\ell = 2$; $Z = 1.75$ for a service level of 0.96 (from unit normal distribution tables).
In this problem, both demand and lead time are variable.

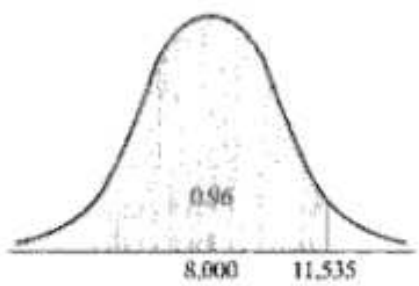

Fig. 15-6

$$OP = \bar{d}\bar{\ell} + Z\sqrt{\sigma_d^2\bar{\ell} + \bar{d}^2\sigma_\ell^2}$$
$$= (1000)(8) + 1.75\sqrt{(100)^2(8) + (1000)^2(2)^2} = 11\,535 \text{ units (Fig. 15-6)}$$

15.18 The annual demand for an automobile spare part is 1500 units and the order quantity is 150 units. The lead time demand follows a normal distribution with a standard deviation of 20 units. If the desired service level is 90%, find: (*a*) the expected number of units short per cycle; (*b*) the expected number of units short per year.

Given: $D = 1500$; $Q = 150$; $\sigma_{d\ell} = 20$; $Z = 1.28$ for a service level of 0.90 (from unit normal distribution tables)

$E(Z) = 0.048$ for $Z = 1.28$ (from unit normal loss function tables) (See Table 15-1)

(*a*) $E(n) = E(Z)\sigma_{d\ell} = (0.048)(20) = 0.96$
(*b*) $E(N) = E(n)(D/Q) = 0.96(1500/150) = 9.6$ units

15.19 The Big and Tall Apparel Shop estimates the annual demand for one of its name brand jeans to be 1800. The order quantity is 100 jeans at a time. The lead time demand is described by a normal distribution with a standard deviation of 12 jeans. The expected number of jeans short per year is 18. Find the lead time service level and the safety stock associated with this shortage.

Given: $D = 1800$; $Q = 100$; $E(N) = 18$; $\sigma_{d\ell} = 12$.

Table 15-1 Unit Normal Loss Function Values and Service Levels

Z	E(Z)	Service Level	Z	E(Z)	Service Level	Z	E(Z)	Service Level
−2.50	2.5020	0.0062	1.15	0.0621	0.8749	1.65	0.0206	0.9505
−2.00	2.0085	0.0228	1.20	0.0561	0.8849	1.70	0.0183	0.9554
−1.50	1.5293	0.0668	1.25	0.0506	0.8944	1.75	0.0162	0.9599
−1.00	1.0833	0.1587	1.30	0.0455	0.9032	1.80	0.0143	0.9641
−0.50	0.6978	0.3085	1.35	0.0409	0.9115	1.85	0.0126	0.9678
0	0.3989	0.5000	1.40	0.0367	0.9192	1.90	0.0111	0.9713
0.50	0.1978	0.6915	1.45	0.0328	0.9265	1.95	0.0097	0.9744
1.00	0.0833	0.8413	1.50	0.0293	0.9332	2.00	0.0085	0.9773
1.05	0.0757	0.8531	1.55	0.0261	0.9394	2.50	0.0020	0.9938
1.10	0.0686	0.8643	1.60	0.0232	0.9452	3.00	0.0004	0.9987

Expected number of units short per year will be determined as follows:

$$E(N) = E(n)(D/Q)$$

Substituting, $18 = E(n)(1800/100)$, we obtain $E(n) = 1$

We know, $E(n) = E(Z)\sigma_{d'}$

Substituting, $1 = E(Z)(12)$, we obtain $E(Z) = 0.083$

Using unit normal loss function tables, for $E(Z) = 0.083$, the service level is 0.8413, or 84.13%. The corresponding Z, which represents the number of standard deviations between the OP and the mean of the lead time demand distribution, is 1.00 (from the same tables). (See Table 15-1.)

$$\text{Safety stock} = Z\sigma_{d'} = 1.00(12) = 12 \text{ jeans}$$

15.20 The McDonald Dairy Farm believes the daily demand for its milk follows a normal distribution with a mean of 100 gallons and a standard deviation of 10 gallons. If the lead time is a constant 1 day and the desired service level is 95%, find: (*a*) safety stock; (*b*) order point; (*c*) average amount of stockout; (*d*) probability of a stockout.

Given: $\bar{d} = 100$; $\sigma_d = 10$; $\ell = 1$ day.
In this problem, demand is variable and lead time is constant.

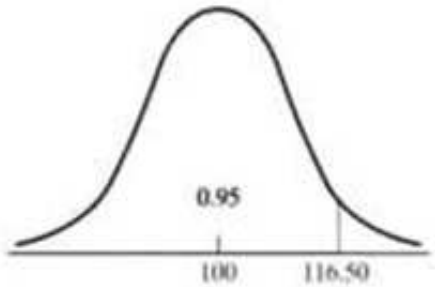

Fig. 15-7

(*a*) $SS = Z\sigma_d\sqrt{\ell}$, where $Z = 1.65$ (from unit normal distribution tables) corresponding to the service level of 0.95.

Hence safety stock $= 1.65(10)(\sqrt{1}) = 16.5$ gallons.

(*b*) $OP = \bar{d}\ell + Z\sigma_d\sqrt{\ell} = (100)(1) + (1.65)(10)(\sqrt{1}) = 116.5$ gallons (Fig. 15-7).

(*c*) Average amount of stockout:

$$E(n) = E(Z)\sigma_{d'} = E(Z)\sigma_d\sqrt{\ell} \text{ (for constant lead time)}$$

where $E(Z) = 0.021$ from unit normal loss function tables, corresponding to the service level of 0.95 or Z of 1.65. (See Table 15-1.)

Hence, $$E(n) = (0.021)(10)(\sqrt{1}) = 0.21 \text{ gallons}$$

(*d*) Probability of a stockout: 1 − service level = 1 − 0.95 = 0.05.

15.21 The daily usage of stationery at the Bank of Teaneck follows a normal distribution with a mean of 8 boxes and a standard deviation of 3 boxes. The bank places orders at fixed time intervals of 8 days with a lead time of 3 days. If the inventory on hand is 15 boxes and the desired service level is 99%, find: (*a*) order quantity; (*b*) safety stock.

Given: $\bar{d} = 8$; $\sigma_d = 3$; $T = 8$; $\ell = 3$; $I = 15$; $Z = 2.33$ for a service level of 0.99 (from unit normal distribution tables).
This is a fixed interval order problem.

(*a*) Order quantity:

$$Q^* = \bar{d}(T + \ell) + Z\sigma_d\sqrt{T + \ell} - I = 8(8 + 3) + 2.33(3)\sqrt{8 + 3} - 15 = 96.18 \text{ boxes}$$

(*b*) Safety stock: $$Z\sigma_d\sqrt{T + \ell} = 23.18 \text{ boxes}$$

15.22 The daily consumption of ground beef at the Burger Palace fast food restaurant for its burgers follows a normal distribution with a mean of 250 pounds and a standard deviation of 20 pounds. The restaurant places orders of 2000 pounds for ground beef at fixed intervals of 7 days with a lead time of 2 days. If the amount on hand is 355 pounds, find the stockout probability.

Given: $\bar{d} = 250$; $\sigma_d = 20$; $Q = 2000$; $I = 355$; $T = 7$; $\ell = 2$.
This is a fixed interval order problem.

$$Q^* = \bar{d}(T + \ell) + Z\sigma_d\sqrt{T + \ell} - I$$

$$2000 = 250(7 + 2) + Z(20)\sqrt{7 + 2} - 355$$

$$Z = 1.75$$

From unit normal distribution tables, for $Z = 1.75$, the service level = 0.96. Hence, stockout probability = 1 − 0.96 = 0.04.

15.23 A small rural store buys freshly made cookies at a cost of \$2.75 per pound and sells them at a price of \$4.00 per pound. The unsold cookies are salvaged at \$1.00 per pound. The daily demand follows a normal distribution with a mean of 95 pounds and a standard deviation of 15 pounds. If the order is placed once a day, find the order quantity. Ignore the carrying costs.

Given: $$\mu = 95;\ \sigma_d = 15$$

Understock cost: C_U = revenue − cost = \$4.00 − \$2.75 = \$1.25 per pound

Overstock cost: C_O = cost − salvage value = \$2.75 − \$1.00 = \$1.75 per pound

$$\text{Service level} = C_U/(C_U + C_O) = 1.25/(1.25 + 1.75) = 0.4166$$

The corresponding $Z = -0.21$ (from unit normal distribution tables).

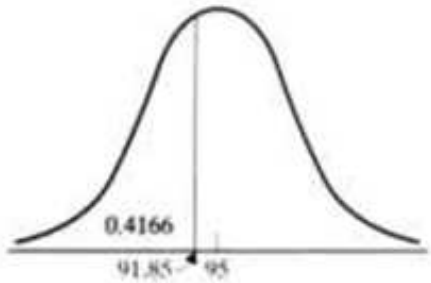

Fig. 15-8

Order quantity: $Q = \mu + Z\sigma_d = 95 + (-0.21)(15) = 91.85$ pounds (Fig. 15-8)

15.24 The daily demand for a specialty flower bouquet at a florist is given by the frequency distribution below:

Demand	0	1	2	3	4	5	6	7
Frequency	8	13	19	24	22	15	7	2

The revenue and cost per unit are \$10.00 and \$5.00 respectively. The carrying cost and salvage value per unit are \$0.25 and \$4.00 respectively. Find the daily stocking level.

C_U = revenue − cost = 10.00 − 5.00 = \$5.00
C_O = cost + carrying cost − salvage value = 5.00 + 0.25 − 4.00 = \$1.25
Service level = $C_U/(C_U + C_O)$ = 5.00/(5.00 + 1.25) = 0.80

Demand	0	1	2	3	4	5	6	7
Frequency	8	13	19	24	22	15	7	2
Probability	(8/110) 0.0727	(13/110) 0.1182	(19/110) 0.1727	(24/110) 0.2182	(22/110) 0.2	(15/110) 0.1364	(7/110) 0.0636	(2/110) 0.0182
Cumulative probability	0.0727	0.1909	0.3636	0.5818	0.7818	0.9182	0.9818	1.000

In order to assure a service level of 80%, the daily stocking should be 5 (which gives an actual service level of 91.82%).

15.25 A small mom and pop restaurant desires a daily service level of 80% for its steaks. If the demand during lead time (DDLT) for steaks follows a Poisson distribution with a mean of 8, find the order point.

Given: Service level = 80%
From Poisson distribution tables, the cumulative probabilities for a mean of 8 are given below:

	Demand												
	0	1	2	3	4	5	6	7	8	9	10	11	12
Mean 8	.000	.003	.014	.042	.100	.191	.313	.453	.593	.717	.816	.888	.936

In order to assure a service level of 80%, the order point level should be 10 (which gives an actual service of 81.6%).

Supplementary Problems

15.26 The Fun Bicycle Shop estimates the annual demand for its ZX bicycles to be 384. The carrying cost per bike is \$20 for a year. The ordering cost is \$60 per order. Determine: (*a*) EOQ; (*b*) annual carrying and ordering costs; (*c*) number of orders per year.

15.27 The Royal Liquor Store has an annual demand of 10 000 cases for Red Star beer. A case of beer costs the store \$5.00. The ordering cost is \$25.00 per order and the carrying cost is 20% of the cost of beer. Determine the following: (*a*) economic order quantity; (*b*) number of orders per year; (*c*) annual total cost.

15.28 A distributor of office equipment has been using EOQ policies for its items. The carrying cost for one of its items has been 25% of its cost and the corresponding EOQ = 100. If the carrying cost increases to 30% of its cost, find the new EOQ.

15.29 Thomas Electric company produces 650 sockets per day, which go into inventory. The demand for the sockets averages 200 sockets per day and about 50 000 sockets per year. The setup cost for production is \$25 and the holding cost per year for each socket is \$0.75. Find: (*a*) economic production lot size; (*b*) TC at EOQ; (*c*) number of production runs per year; (*d*) run time.

15.30 The Midwest Tire Manufacturing Company produces 1200 tires per day, which go into inventory. The average daily demand is 400 tires and the annual demand is about 100 000 tires. The unit cost of production is \$10, the carrying cost is 2% of the production cost and the setup cost is \$100.00. Find: (*a*) economic production lot size; (*b*) TC at EOQ; (*c*) number of production runs per year; (*d*) production run time; (*e*) maximum inventory level.

15.31 For Problem 15.30, find the optimal production lot sizes and corresponding total costs for the following daily production rates: (*a*) 800; (*b*) 1600.

15.32 The General Machine Company produces component K for vacuum cleaners at the rate of 1000 units per day. The average daily and annual demands are 800 and 200 000 units respectively. The cost per unit is \$1.00; annual carrying cost is 20% of the item cost; production setup cost is \$150.00. Determine the following: (*a*) optimal production lot size; (*b*) number of production runs per year; (*c*) length of production run; (*d*) maximum inventory level; (*e*) annual total cost.

15.33 Assuming instantaneous delivery for Problem 15.9, find (*a*) EOQ; (*b*) minimum TC.

15.34 The David's Grocery Store buys 900 units of a particular item from the Goliath's Wholesale Company. The ordering costs are \$12.00 and the carrying costs are 25% of the unit price. The discount price structure is

as follows:

Order quantity	Price per unit (P)
1 to 99	\$8.00
100 to 899	7.30
900+	7.00

Assuming instantaneous delivery, find (*a*) EOQ; (*b*) optimum TC.

15.35 The Eat'n Go Fast Food Restaurant uses 5200 packages of mustard per year. The ordering cost is \$26. The carrying cost per package per year is 25% of the unit price. The discount price is given below:

Order quantity	Price per unit (P)
1 to 100	\$8.50
101 to 300	\$8.20
301 to 750	\$8.00
751+	\$7.50

Assuming instantaneous delivery, find: (*a*) EOQ; (*b*) optimum TC.

15.36 For Problem 15.5 assume gradual delivery. Let the daily production and demand rates be 500 and 50 respectively. Find: (*a*) EOQ; (*b*) optimum TC.

15.37 For Problem 15.6 assume gradual delivery. Let the daily production and demand rates be 3000 and 300 respectively. Find (*a*) EOQ; (*b*) optimum TC; (*c*) number of orders per year; (*d*) time between orders; (*e*) maximum inventory level.

15.38 For Problem 15.34 assume gradual delivery. Let the daily production and demand rates be 10 and 6 respectively. Find (*a*) EOQ; (*b*) optimum TC.

15.39 For Problem 15.8 assume a gradual delivery. Let the daily production and demand rates be 210 and 70 respectively. Find (*a*) EOQ; (*b*) optimum TC.

15.40 In order to satisfy future customer demands, the Morristown Manufacturing Company produces and stocks component ABC. The past data are as follows: average demand per day is 130 units, average production lead time is 5 days, and the frequency distribution of actual DDLT is given below:

Actual DDLT	Frequency
300–399	0
400–499	16
500–599	20
600–699	25
700–799	14
800–899	8
900–999	3

The company desires an 85% service level during lead time. Find: (*a*) order point; (*b*) safety stock.

15.41 The demand during lead time (DDLT) for automobile mufflers at the Superior Auto Repair Shop is described by a Poisson distribution with a mean of 1.3. Find the order point for a service level of 95%.

15.42 Based on past data, the Baltimore Bottling Co. uses the normal distribution (mean = 5000; standard deviation = 500) to describe the leadtime demand for its medium size beverage bottles. Find the order point for a service level of 90%.

15.43 The daily demand for chocolate ice cream at the Sweet & Cool Store has a normal distribution with a mean of 80 gallons and a standard deviation of 10 gallons. The store uses an OP of 440 gallons. Assuming a constant lead time of 5 days, find the risk of a stockout during lead time.

15.44 Consider Problem 15.43. If the desired service level is 96%, find: (*a*) order point; (*b*) safety stock.

15.45 The daily demand for one-inch diameter steel bar for the Metuchan Machine Shop is a constant 250 feet. The lead time follows a normal distribution with a mean of 10 days and a standard deviation of 3 days. Find the order point for a service level of 90%.

15.46 The daily demand for tacos at Taco King follows a normal distribution with a mean of 400 and a standard deviation of 40. The lead time also follows a normal distribution with a mean of 10 days and a standard deviation of 2.5 days. Find the order point for a service level of 85%.

15.47 The annual demand for a vacuum cleaner component is 500 units and the order quantity is 50 units. The lead time demand is described by a normal distribution with a standard deviation of 7 units. If the desired service level is 85%, find: (*a*) the expected number of units short per cycle; (*b*) the expected number of units short per year.

15.48 The TNR Retail Outlet has an annual demand of 3900 units for its Hero T-shirts. Orders are placed for 150 units at a time. The expected number of units short per year is 40. Assume the lead time demand is described by a normal distribution with a standard deviation of 20. Find: (*a*) lead time service level; (*b*) the safety stock.

15.49 The Tasty Ice Cream Co. believes the daily demand for the vanilla flavor follows a normal distribution with a mean of 70 gallons and a standard deviation of 8 gallons. If the lead time is a constant 1 day and the desired service level is 96%, find: (*a*) safety stock; (*b*) reorder point; (*c*) average amount of stockout; (*d*) probability of a stockout.

15.50 A small publishing company places orders for its printing ink in fixed intervals of 6 days. The daily consumption of ink follows a normal distribution with a mean of 20 gallons and a standard deviation of 2 gallons. The current inventory on hand is 3 gallons. The lead time is 3 days. If the desired risk of a stockout is 1%, find: (*a*) order size; (*b*) safety stock.

15.51 The All News newspaper company places orders for blue ink at fixed time intervals of 9 days with a lead time of 3 days. The daily consumption follows a normal distribution with a mean of 10 and a standard deviation of 5 blue ink containers. If the on-hand inventory is 36 containers and the desired service level is 98%, find: (*a*) order quantity; (*b*) safety stock.

15.52 In Problem 15.50, find the risk of a stockout if the inventory on hand at the time of order is 2 and the order size is 185.

15.53 In Problem 15.51, assume the order quantity and on-hand inventory are 120 and 20 containers respectively. Find the stockout probability.

15.54 The Fresh Bake Shop makes cakes at a unit cost of \$6 at the beginning of each week and sells them at a unit price of \$12 during the week. The unsold cakes are salvaged at \$2 per unit at the end of the week. The weekly demand is described by a normal distribution with a mean of 125 and a standard deviation of 16. Find the order quantity, ignoring the carrying costs.

15.55 The historical data for the daily demand for boxes of freshly made chocolate chip cookies at the Beverly Bakery are as follows:

Demand (Boxes)	1	2	3	4	5	6	7	8	9	10
Frequency	2	3	4	6	8	7	5	3	1	1

The understock and overstock costs are \$4 and \$1 respectively per box.
Find the optimal daily stocking level.

15.56 Consider problem 15.55. If the shortage and excess costs are \$6 and \$2 respectively per box, find the optimal daily stocking level.

15.57 The daily demand for smoked salmon at the local deli is given by the frequency distribution below:

Demand	0	1	2	3	4	5	6	7	8
Frequency	5	8	10	12	13	11	9	6	3

The revenue and cost per unit are \$20 and \$10 respectively. The carrying cost and salvage value per unit are \$0.50 and \$7 respectively. Find: (*a*) service level; (*b*) daily stocking level.

15.58 The New Deli prepares fresh salads every day at a unit cost of \$2.25 and sells them at a unit price of \$4.75. Fifty percent of the unsold salads are salvaged at a local restaurant for \$2.50 and the remaining ones are scrapped. The carrying costs are \$0.15 per salad. The frequency distribution of daily demand is given below:

Demand	0	1	2	3	4	5	6	7
Frequency	.10	.20	.25	.17	.10	.08	.06	.04

Find the optimum daily stocking level.

15.59 Assume the same revenue and cost data as in Problem 15.57. Find the daily stocking level for smoked salmon, if demand is described by the Poisson distribution with a mean of 5.0 pounds per day.

15.60 The Mount St. Anne Ski Store has 5 snowboards for rental. The probability distribution of daily demand is given below:

Demand	0	1	2	3	4	5	6	7	8	9
Frequency	.03	.07	.10	.15	.20	.15	.08	.07	.10	.05

The understock cost is \$40. Find the upper and lower bounds of the overstock cost for the present inventory level to be optimum.

Chapter 16

Forecasting

FORECASTING

Forecasting is predicting or estimating the future value of a variable. Quantitative forecasting techniques such as regression methods and smoothing methods will be discussed in this chapter.

REGRESSION METHODS

Regression methods deal with establishing a mathematical relationship between independent and dependent variables. The variable that is to be estimated is called the dependent variable while the variable that helps in the estimation is called the independent variable. Simple regression deals with a linear relationship between one dependent and one independent variable. Multiple regression deals with one dependent variable and two or more independent variables.

SIMPLE LINEAR REGRESSION

Consider the linear regression equation $Y = a + bX$, where Y is the dependent variable, X is the independent variable, a is the vertical axis intercept, and b is the slope of the straight line. The values of constants a and b are obtained as follows:

$$a = \frac{\sum x^2 \sum y - \sum x \sum xy}{n \sum x^2 - (\sum x)^2}; \qquad b = \frac{n \sum xy - \sum x \sum y}{n \sum x^2 - (\sum x)^2}$$

where x is the independent variable data, y is the dependent variable data, and n is the total number of observations. Using the above values of a and b in the linear regression equation $Y = a + bX$, Y can be estimated for a future value of X. This simple linear regression is also called causal linear regression.

If the data are a time series, the independent variable is the time period and the dependent variable is the variable to be forecasted, such as sales. Such a relationship, known as time series linear regression or trend line, is expressed as $Y = a + bT$, where T is the time period.

COEFFICIENTS OF CORRELATION AND DETERMINATION

The coefficient of correlation (r) is a relative measure of the relationship between the dependent variable y and the independent variable x. It is computed as follows:

$$r = \frac{n \sum xy - \sum x \sum y}{\sqrt{[n \sum x^2 - (\sum x)^2][n \sum y^2 - (\sum y)^2]}}$$

where $-1 \leq r \leq +1$. A perfect relationship exists, when $r = \pm 1$.

The coefficient of determination is the square of the coefficient of correlation. This is a measure of the proportion of variance in the dependent variable y that can be explained by the independent variable x. Note that $0 \leq r^2 \leq 1$. For example, if $r^2 = 0.9$, the independent variable explains 90% of the variation in the dependent variable.

STANDARD ERROR OF ESTIMATE

The standard error (deviation) of estimate (forecast) is a measure of the dispersion or scatter of the past data around the trend (regression) line.

It is given by the following equation:

$$S_E = \sqrt{\frac{\sum y^2 - a\sum y - b\sum xy}{n-2}}$$

SPECIAL CASE: LOGARITHMIC (EXPONENTIAL) MODELS

The logarithmic or exponential models are used for data depicting growth with no sign of leveling off. Nonlinear functions of the exponential models can be transformed into linear functions as follows:

(1) $W = AB^X$
Taking common logarithms on both sides, $\log W = \log A + (\log B)X$
Substituting $Y = \log W$, $a = \log A$, and $b = \log B$, $Y = a + bX$

(2) $W = e^{a+bX}$
Taking natural logarithms on both sides, $\log_e W = (a + bX)\log_e e = a + bX$
Substituting $Y = \log_e W$, $Y = a + bX$

After determining a and b in the usual manner, the parameters A and B can be found through antilogarithms.

MULTIPLE REGRESSION

Consider the multiple regression equation $Y = b_0 + b_1X_1 + b_2X_2 + \cdots + b_kX_k$, where Y is the dependent variable, $X_1, X_2, X_3, \ldots, X_k$ are the independent variables, and $b_0, b_1, b_2, \ldots, b_k$ are the coefficients.

SMOOTHING METHODS

One way of removing random variations in a time series is to smooth it. Two commonly used smoothing methods are moving averages and exponential smoothing.

MOVING AVERAGES

The moving average method finds the forecast for a particular time period by averaging the data values of the most recent n periods in the time series. Mathematically, the moving average is calculated as follows:

$$\text{MA}(n) = \frac{\sum(\text{latest } n \text{ data values})}{n}$$

For example, MA(3) would imply a three-period moving average.

WEIGHTED MOVING AVERAGES

The weighted moving averages method uses different weights for the most recent n data values.

EXPONENTIAL SMOOTHING

Exponential smoothing finds the new forecast by taking the weighted average of the immediately preceding actual and forecast values. The basic exponential model is as follows:

$$F_t = \alpha A_{t-1} + (1-\alpha)F_{t-1} \qquad \text{or} \qquad F_t = F_{t-1} + \alpha(A_{t-1} - F_{t-1})$$

where F_t = forecast value for period t
F_{t-1} = forecast value for period $t-1$
A_{t-1} = actual value for period $t-1$
α = smooth constant $(0 \le \alpha \le 1)$

EXPONENTIAL SMOOTHING WITH TREND (TREND-ADJUSTED EXPONENTIAL SMOOTHING)

Trend-adjusted exponential smoothing makes use of both an exponentially smoothed component (S_t) and a trend component (T_t). The new forecast is obtained through the following equations:

$$S_t = \alpha A_t + (1-\alpha)(S_{t-1} + T_{t-1})$$
$$T_t = \beta(S_t - S_{t-1}) + (1-\beta)T_{t-1}$$
$$F_{t+1} = S_t + T_t; \qquad F_{t+k} = S_t + kT_t$$

where S_t is the smoothed forecast value in period t, T_t is the trend estimate value in period t, A_t is the actual value in period t, α is the exponential smoothing constant $(0 \le \alpha \le 1)$, β is the trend smoothing constant $(0 \le \beta \le 1)$, F_{t+1} is the forecast value in period $t+1$, and F_{t+k} is the forecast value in period $t+k$.

Since the calculation of the first estimate of trend T_2 needs the first two actual values, the computational procedure starts with $t = 2$ (not with $t = 1$) as follows:

$$S_2 = A_2$$
$$T_2 = A_2 - A_1$$

$$S_3 = \alpha A_3 + (1-\alpha)(S_2 + T_2)$$
$$T_3 = \beta(S_3 - S_2) + (1-\beta)T_2$$
$$\vdots$$
$$S_t = \alpha A_t + (1-\alpha)(S_{t-1} + T_{t-1})$$
$$T_t = \beta(S_t - S_{t-1}) + (1-\beta)T_{t-1}$$

FORECAST ACCURACY

The three most commonly used measures of forecast accuracy are the mean absolute deviation (MAD), the sum of squared errors (SSE), and the mean squared error (MSE). These are defined as follows:

$$\text{MAD} = \sum |A_t - F_t|/n$$
$$\text{SSE} = \sum (A_t - F_t)^2$$
$$\text{MSE} = \sum (A_t - F_t)^2/n$$

where A_t is the actual value of time t and F_t is the forecast value at time t. The difference between actual value and forecast value $(A_t - F_t)$ is called forecast error.

FORECASTING TIME SERIES WITH MULTIPLICATIVE MODEL

The underlying data patterns of a time series consist of trend, cyclical, seasonal, and random components. A trend exhibits the long-range upward or downward direction of the time series data. A cycle shows a long-term wavelike data pattern that repeats itself. Seasonality is a short-term repetitive data pattern. The random component accounts for the irregular changes due to many different factors that cannot be explained.

The multiplicative model is given below:

$$y_t = T_t \times C_t \times S_t \times R_t$$

where

y_t = actual time series value

T_t = trend component

C_t = cyclical component

S_t = seasonal component

R_t = random component

Procedure to develop time series forecast for data with seasonality:

1. Compute seasonal indices, to measure the degree of differences among seasons, as follows:

   (*a*) Isolate the trend-cycle of the data by calculating moving averages, where number of periods equals number of seasons. The resulting moving averages, with no seasonal and almost no random variations, are as follows:

   $$\mathrm{MA}_t = T_t \times C_t$$

   (*b*) Calculate the ratio of the time series to the moving average as below:

   $$\frac{y_t}{\mathrm{MA}_t} = \frac{T_t \times C_t \times S_t \times R_t}{T_t \times C_t} = S_t \times R_t$$

   (*c*) Calculate the average of the above ratios for each season, which is a measure of seasonal differences with almost no random variations.

   (*d*) Adjust the above average ratios to obtain seasonal indices (SI), where the average seasonal index is 1. For example, for quarterly data, multiply each seasonal index by 4 (sum of the unadjusted seasonal indices).

   Note: If the time series contains no discernible cyclical component, use regression analysis instead of moving averages in step (*a*).

   The multiplicative model without the cyclical component is as follows:

   $$y_t = T_t \times S_t \times R_t$$

   Since linear regression gives the trend of the data, calculate the ratio of the time series to the regression line as follows:

   $$\frac{y_t}{Y_t} = \frac{T_t \times S_t \times R_t}{T_t} = S_t \times R_t$$

   Continue with steps (*c*) and (*d*).

2. Use the seasonal indices to deseasonalize the data. That is, remove the effect of season from the time series, by dividing each time series value by the corresponding seasonal index.

3. Obtain a linear regression equation of the form $T_t = a + bt$ for the deseasonalized data. This will represent the trend component of the multiplicative model.

4. Use the above trend equation to predict future trend values.
5. Multiply the above trend values by the corresponding seasonal indices to obtain the forecasts as follows:

$$F_t = T_t \times \mathrm{SI}_t$$

Note: In the multiplicative model, estimating trend and seasonality components poses no problems. However, estimating the cyclical component is a judgment call, since it is based on the economic or industry activity level.

Solved Problems

16.1 The following data represent the relationship between the dependent variable—Sales Revenue in millions of dollars (y)—and the independent variables—Number of Sales Representatives (x_1) and Product Price \$ (x_2):

Year	Sales Revenue (\$ millions)	Number of Sales Representatives	Product Price (\$)
1	1.2	25	0.95
2	1.5	25	0.93
3	2.0	25	0.92
4	3.5	26	0.90
5	4.1	28	0.87
6	5.6	28	0.85

(*a*) If the Company intends to increase the number of sales representatives to 30, use causal linear regression to forecast next year's sales revenue. (*b*) If the Company plans to decrease the product price to \$0.82 next year, forecast next year's sales revenue using causal linear regression. (*c*) Compare the results of parts (*a*) and (*b*) using the coefficient of determination.

(*a*) Causal linear regression based on number of sales representatives:

Number of Sales Representatives (x_1)	Sales Revenue (y) (millions of dollars)	x_1^2	y^2	$x_1 y$
25	1.2	625	1.44	30.0
25	1.5	625	2.25	37.5
25	2.0	625	4.00	50.0
26	3.5	676	12.25	91.0
28	4.1	784	16.81	114.8
28	5.6	784	31.36	156.8
Sum 157	17.9	4119	68.11	480.1

$$a = \frac{\sum x_1^2 \sum y - \sum x_1 \sum x_1 y}{n \sum x_1^2 - (\sum x_1)^2} = \frac{4119(17.9) - 157(480.1)}{6(4119) - 157^2} = -25.3169$$

$$b = \frac{n\sum x_1 y - \sum x_1 \sum y}{n\sum x_1^2 - (\sum x_1)^2} = \frac{6(480.1) - 157(17.9)}{6(4119) - 157^2} = 1.0815$$

$$Y = a + bX = -25.3169 + 1.0185X$$

If $$X = 30, \quad Y = -25.3169 + 1.0815(30) = \mathbf{\$7.128} \text{ millions}$$

(*b*) Causal linear regression based on product price:

Product Price \$ (x_2)	Sales Revenue (y) (millions of dollars)	x_2^2	y^2	$x_2 y$
0.95	1.2	0.9025	1.44	1.140
0.93	1.5	0.8649	2.25	1.395
0.92	2.0	0.8464	4.00	1.840
0.90	3.5	0.81	12.25	3.150
0.87	4.1	0.7569	16.81	3.567
0.85	5.6	0.7225	31.36	4.760
Sum 5.42	17.9	4.9032	68.11	15.852

$$a = \frac{\sum x_2^2 \sum y - \sum x_2 \sum x_2 y}{n\sum x_2^2 - (\sum x_2)^2} = \frac{4.9032(17.9) - 5.42(15.852)}{6(4.9032) - 5.42^2} = 43.2112$$

$$b = \frac{n\sum x_2 y - \sum x_2 \sum y}{n\sum x_2^2 - (\sum x_2)^2} = \frac{6(15.852) - 5.42(17.9)}{6(4.9032) - 5.42^2} = -44.5327$$

$$Y = a + bX = 43.2112 - 44.5327X$$

If $$X_2 = 0.82, \quad Y = 43.2112 - 44.5327(0.82) = \mathbf{\$6.694} \text{ millions}$$

(*c*) If the coefficient of determination for Parts (*a*) and (*b*) are r_1^2 and r_2^2 respectively, then:

$$r_1 = \frac{n\sum x_1 y - \sum x_1 \sum y}{\sqrt{[n\sum x_1^2 - (\sum x_1)^2][n\sum y^2 - (\sum y)^2]}}$$

$$r_1 = \frac{6(480.1) - 157(17.9)}{\sqrt{[6(4119) - 157^2][6(68.11) - 17.9^2]}} = 0.9282$$

$$r_1^2 = (0.9282)^2 = \mathbf{0.8616}$$

$$r_2 = \frac{n\sum x_2 y - \sum x_2 \sum y}{\sqrt{[n\sum x_2^2 - (\sum x_2)^2][n\sum y^2 - (\sum y)^2]}}$$

$$r_2^2 = (-0.9807)^2 = \mathbf{0.9618}$$

Since $r_2^2 > r_1^2$, the model of Part (*b*) is more reliable.

16.2 The following data represent the industry sales (x) and Corporation ABC's annual sales (y) of toddler clothes:

Year	Industry Sales (x) ($ millions)	ABC's Sales (y) ($ millions)
1	1103	105
2	1250	117
3	1097	110
4	955	101
5	945	97
6	903	92
7	1025	104
8	1170	116

(*a*) If the industry estimate of next year's sales is $1300 millions, forecast ABC's annual sales for next year using causal linear regression. (*b*) Compute the correlation coefficient and interpret its meaning. (*c*) How much of the variation in ABC's sales is explained by industry sales? (*d*) Find a 95% confidence interval estimate for next year's sales.

(*a*) Causal linear regression:

Industry Sales (x)	ABC's Sales (y)	x^2	y^2	xy
1103	105	1 216 609	11 025	115 815
1250	117	1 562 500	13 689	146 250
1097	110	1 203 409	12 100	120 670
955	101	912 025	10 201	96 455
945	97	893 025	9 409	91 665
903	92	815 409	8 464	83 076
1025	104	1 050 625	10 816	106 600
1170	116	1 368 900	13 456	135 720
Sum 8448	842	9 022 502	89 160	896 251

$$a = \frac{\sum x^2 \sum y - \sum x \sum xy}{n \sum x^2 - (\sum x)^2} = \frac{9\,022\,502(842) - 8448(896\,251)}{8(9\,022\,502) - (8448)^2} = 31.3298$$

$$b = \frac{n \sum xy - \sum x \sum y}{n \sum x^2 - (\sum x)^2} = \frac{8(896\,251) - 8448(842)}{8(9\,022\,502) - (8448)^2} = 0.07$$

$$Y = a + bX = \mathbf{31.3298 + 0.07}X$$

If $X = 1300, \quad Y_q = 31.3298 + 0.07(1300) = \mathbf{\$122.33}$ millions

(*b*) Coefficient of correlation:

$$r = \frac{n \sum xy - \sum x \sum y}{\sqrt{[n \sum x^2 - (\sum x)^2][n \sum y^2 - (\sum y)^2]}}$$

$$r = \frac{8(896\,251) - 8448(842)}{\sqrt{[8(9\,022\,502) - 8448^2][8(89\,160) - 842]^2}} = 0.9597$$

A correlation coefficient of 0.9597 indicates a very strong and positive relationship between industry sales and ABC's sales.

(*c*) Coefficient of determination:

$$r^2 = (0.9597)^2 = \mathbf{0.9210} \quad \text{or} \quad \mathbf{92.1\%}$$

The above determination coefficient indicates that 92.1% of the variation in ABC's sales is explained by industry sales.

(*d*) Confidence interval:

$$\text{interval estimate} = Y_{\text{next}} \pm t(S_E),$$

where

$$Y_{\text{next}} = Y_9 = \$122.33$$

From tables, for 6 $(n-2)$ degrees of freedom and 95% confidence interval, $t = 2.447$.

$$S_E = \sqrt{\frac{\sum y^2 - a\sum y - b\sum xy}{n-2}} = \sqrt{\frac{89\,160 - 31.3298(842) - 0.07(896\,251)}{8-2}} = 2.669$$

$$\text{interval estimate} = Y_{\text{next}} \pm t(S_E) = 122.33 \pm 2.447(2.669) = \mathbf{\$115.799, \$128.861} \text{ millions}$$

16.3 The following data are available on the relationship between interest rate and ABC's bond price:

Time Period	Interest Rate % (x)	ABC's Bond Price per Share \$ (y)
1	3.02	998.5
2	3.03	996.4
3	2.97	1014.3
4	2.96	1017.2
5	2.99	1013.2
6	3.03	1002.6

(*a*) Find a causal linear regression equation to predict ABC's bond price per share based on interest rate. (*b*) Calculate the correlation coefficient and interpret its value. (*c*) If the interest rate is expected to be about 3.2% next period, find a 99% confidence interval estimate for ABC's bond price per share. (*d*) Compute the determination coefficient and interpret its value.

(*a*) Causal linear regression equation:

Time Period	Interest Rate % (x)	Bond Price/Share \$ (y)	x^2	y^2	xy
1	3.02	998.5	9.1204	997 002.25	3 015.470
2	3.03	996.4	9.1809	992 812.96	3 019.092
3	2.97	1014.3	8.8209	1 028 804.49	3 012.471
4	2.96	1017.2	8.7616	1 034 695.84	3 010.912
5	2.99	1013.2	8.9401	1 026 574.24	3 029.468
6	3.03	1002.6	9.1809	1 005 206.76	3 037.878
Sum	18	6042.2	54.0048	6 085 096.54	18 125.291

$$a = \frac{54.0048(6042.2) - 18(18\,125.291)}{6(54.0048) - (18)^2} = 1825.158$$

$$b = \frac{6(18\,125.291) - 18(6042.2)}{6(54.0048) - (18)^2} = -272.708$$

$$Y = a + bX = 1825.158 - 272.708X$$

(*b*) Correlation coefficient:

$$r = \frac{6(18\,125.291) - 18(6042.2)}{\sqrt{[6(54.0048) - (18)^2][6(6\,085\,096.54) - (6042.2)^2]}} = -0.945$$

The correlation coefficient (-0.945) gives both the strength and the direction of relationship between independent (interest rates) and dependent (bond price per share) variables. The strength of the relationship is indicated by the absolute value of r ($|-0.945| = 0.945$). The direction of the relationship is given by the sign of r (negative). Hence, in this problem $r = -0.945$ shows a strong negative relationship between interest rate and bond price per share. As interest rate increases/decreases, the bond price per share decreases/increases.

(*c*) Confidence interval:

$$\text{interval estimate} = Y_{\text{next}} \pm t(S_E),$$

where $$Y_{\text{next}} = Y_7 = 1825.158 - 272.708(3.1) = \$979.76$$

From tables, for 4 ($n - 2$) degrees of freedom and 99% confidence interval (1% significance level), $t = 4.604$

$$S_E = \sqrt{\frac{6\,085\,096.54 - 1825.158(6042.2) + 272.708(18\,125.281)}{6 - 2}} = 3.112$$

$$\text{interval estimate} = Y_{\text{next}} \pm t(S_E) = 979.76 \pm 4.604(3.112) = \mathbf{\$965.43, \$994.09}$$

(*d*) Determination coefficient:

$$r^2 = (-0.945)^2 = 0.893 \quad \text{or} \quad 89.3\%$$

The coefficient of determination gives the amount (89.3%) of variation in y that is explained by x. Hence, in this problem the interest rate explains 89.3% of the variation in bond price per share.

16.4 (*a*) Using the data of Problem 16.1, forecast next year's sales revenue using time series linear regression with time as the independent variable. (*b*) Find the coefficient of determination.

(*a*) Time series linear regression:

Year (x)	Sales (y)	x^2	y^2	xy
1	1.2	1	1.44	1.2
2	1.5	4	2.25	3.0
3	2	9	4.00	6.0
4	3.5	16	12.25	14.0
5	4.1	25	16.81	20.5
6	5.6	36	31.36	33.6
Sum 21	17.9	91	68.11	78.3

$$a = \frac{\sum x^2 \sum y - \sum x \sum xy}{n \sum x^2 - (\sum x)^2} = \frac{91(17.9) - 21(78.3)}{6(91) - 21^2} = -0.147$$

$$b = \frac{n \sum xy - \sum x \sum y}{n \sum x^2 - (\sum x)^2} = \frac{6(78.3) - 21(17.9)}{6(91) - 21^2} = 0.894$$

$$Y = a + bX = \mathbf{-0.147 + 0.894X}$$

Next year's sales forecast (Y_7):

$$Y_7 = -0.147 + 0.894(7) = \mathbf{\$6.111} \text{ millions}$$

(*b*) Coefficient of determination:

$$r^2 = \left(\frac{n\sum xy - \sum x \sum y}{\sqrt{[n\sum x^2 - (\sum x)^2][n\sum y^2 - (\sum y)^2]}}\right)^2$$

$$r^2 = \left(\frac{6(78.3) - 21(17.9)}{\sqrt{[6(91) - 21]^2[6(68.11) - 17.9^2]}}\right)^2 = 0.952$$

16.5 The following are the data from the Predicasts Basebook on computer services employment (in thousands):

Year	1	2	3	4	5	6	7	8	9	10	11	12	13
Employ	271	304	337	365	416	476	542	589	631	676	740	775	792

(*a*) Find the time series linear regression equation and the forecast for next year's computer services employment. (*b*) Compute the coefficient of correlation and the coefficient of determination. (*c*) Find a 95% confidence interval estimate for next year's forecast.

(*a*) Time series linear regression:

	x	y	x^2	y^2	xy
	1	271	1	73 441	271
	2	304	4	92 146	608
	3	337	9	113 569	1 011
	4	365	16	133 225	1 460
	5	416	25	173 056	2 080
	6	476	36	226 576	2 856
	7	542	49	293 764	3 794
	8	589	64	346 921	4 712
	9	631	81	398 161	5 679
	10	676	100	456 976	6 760
	11	740	121	547 600	8 140
	12	775	144	600 625	9 300
	13	792	169	627 264	10 296
Sum	91	6914	821	4 083 596	56 967

$$a = \frac{\sum x^2 \sum y - \sum x \sum (xy)}{n\sum x^2 - (\sum x)^2} = \frac{819(6914) - 91(56\,967)}{13(819) - 91^2} = 202.269$$

$$b = \frac{n\sum xy - \sum x \sum y}{n\sum x^2 - (\sum x)^2} = \frac{13(56\,967) - 91(6914)}{13(819) - 91^2} = 47.0824$$

$$Y = a + bX = \mathbf{202.269 + 47.0824}X$$

$$Y_{\text{next}} = Y_{14} = 202.269 + 47.0824(14) = \mathbf{861.423} \text{ (in thousands)}$$

(*b*) Coefficient of correlation (r) and coefficient of determination (r^2):

$$r = \frac{n\sum xy - \sum x \sum y}{\sqrt{[n\sum x^2 - (\sum x)^2][n\sum y^2 - (\sum y)^2]}} = \frac{13(56\,967) - 91(6914)}{\sqrt{[13(819) - 91^2][13(4\,083\,594) + 6914^2]}} = 0.993$$

$$r^2 = (0.993)^2 = 0.986$$

(*c*) Confidence interval:

$$\text{interval estimate} = Y_{\text{next}} \pm t(S_E),$$

where

$$Y_{\text{next}} = Y_{14} = 861.423$$

From tables, for $11(n-2)$ degrees of freedom and 95% confidence interval (5% significance level), $t = 2.201$.

$$S_E = \sqrt{\frac{\sum y^2 - a\sum y - b\sum xy}{n-2}} = \sqrt{\frac{4\,083\,596 - 202.269(6914) - 47.0824(56\,967)}{13-2}} = 16.418$$

$$\text{interval estimate} = Y_{\text{next}} \pm t(S_E) = 861.423 \pm 2.201(16.418) = \mathbf{825.287,\ 897.559} \text{ thousands}$$

16.6 Find next year's forecast using time series linear regression for the following data on yearly arrivals by foreigners (in millions) from the Predicasts Basebook:

1	2	3	4	5	6	7	8	9	10	11
9.94	11.25	11.98	10.91	8.83	10.40	8.90	10.26	11.64	13.80	15.10

	Time (x)	Arrivals by Foreigners (y)	x^2	y^2	xy
	1	9.94	1	98.8036	9.94
	2	11.25	4	126.5625	22.50
	3	11.98	9	143.5204	35.94
	4	10.91	16	119.0281	43.64
	5	8.83	25	77.9689	44.15
	6	10.40	36	108.1600	62.40
	7	8.90	49	79.2100	62.30
	8	10.26	64	105.2676	82.08
	9	11.64	81	135.4896	104.76
	10	13.80	100	190.4400	138.00
	11	15.10	121	228.0100	166.1
Sum	66	123.01	506	1412.4607	771.81

$$a = \frac{\sum x^2 \sum y - \sum x \sum (xy)}{n\sum x^2 - (\sum x)^2} = \frac{506(123.01) - 66(771.81)}{11(506) - 66^2} = 9.342$$

$$b = \frac{n\sum xy - \sum x \sum y}{n\sum x^2 - (\sum x)^2} = \frac{11(771.81) - 66(123.01)}{11(506) - 66^2} = 0.307$$

$$Y = a + bX = 9.342 + 0.307X$$

Next year's forecast (Y_{12}): $Y_{12} = 9.342 + 0.307(12) = \mathbf{13.026}$ *(in millions)*

16.7 (*a*) Find the time series log-linear regression equation for the following data in the form: $\ln(Y) = a + bX$. (*b*) Find the coefficient of correlation. (*c*) Find the next period's forecast.

Period (x)	1	2	3	4	5	6
Demand in \$ thousands (y)	45	48	50	53	57	62

(*a*) Time series linear regression:

Period (x)	Demand (y)	$y' = \ln(y)$	x^2	$(y')^2$	xy'
1	45	3.807	1	14.493	3.807
2	48	3.871	4	14.985	7.742
3	50	3.912	9	15.304	11.736
4	53	3.970	16	15.761	15.880
5	57	4.043	25	16.346	20.215
6	62	4.127	36	17.032	24.762
Sum 21		23.73	91	93.921	84.142

$$a = \frac{\sum x^2 \sum y' - \sum x \sum (xy')}{n \sum x^2 - (\sum x)^2} = \frac{91(23.73) - 21(84.142)}{6(91) - 21^2} = 3.738$$

$$b = \frac{n \sum xy' - \sum x \sum y'}{n \sum x^2 - (\sum x)^2} = \frac{6(84.142) - 21(23.73)}{6(91) - 21^2} = 0.062$$

$$Y' = \ln(Y) = 3.738 + 0.062X$$

Taking antilogarithms of both sides, $Y = e^{3.738 + 0.062X}$

(*b*) Coefficient of correlation:

$$r = \frac{n \sum xy' - \sum x \sum y'}{\sqrt{[n \sum x^2 - (\sum x)^2][n \sum (y')^2 - (\sum y')^2]}} = \frac{6(84.142) - 21(23.73)}{\sqrt{[6(91) + 21^2][6(93.921) - 23.73^2]}} = 0.99$$

(*c*) Next period's forecast (Y_7):

$$Y_7 = e^{3.738 + 0.062(7)} = e^{4.172} = \mathbf{\$64.845} \text{ thousands}$$

16.8 (*a*) Using the data of Problem 16.5, find the time series log-linear regression equation in the form: $\log Y = a + bX$. (*b*) Find the coefficient of determination. (*c*) Find next year's forecast.

(*a*) Time series log-linear regression:

x	y	$y' = \log(y)$	x^2	$(y')^2$	xy'
1	271	2.433	1	5.919	2.433
2	304	2.483	4	6.165	4.966
3	337	2.528	9	6.389	7.583
4	365	2.562	16	6.565	10.249
5	416	2.619	25	6.860	13.095
6	476	2.678	36	7.170	16.066
7	542	2.734	49	7.475	19.138
8	589	2.770	64	7.674	22.161
9	631	2.800	81	7.840	25.200
10	676	2.830	100	8.009	28.299
11	740	2.869	121	8.232	31.562
12	775	2.889	144	8.348	34.672
13	792	2.899	169	8.403	37.683
Sum 91	6914	35.094	819	95.048	253.107

$$a = \frac{\sum x^2 \sum y' - \sum x \sum (xy')}{n \sum x^2 - (\sum x)^2} = \frac{819(35.094) - 91(253.107)}{13(819) - 91^2} = 2.413$$

$$b = \frac{n \sum xy' - \sum x \sum y'}{n \sum x^2 - (\sum x)^2} = \frac{13(253.107) - 91(35.094)}{13(819) - 91^2} = 0.0409$$

$$Y' = \log(Y) = \mathbf{2.413 + 0.0409}X$$

Taking antilogarithms of both sides,

$$Y = 10^{2.413}(10^{0.0409x}) = \mathbf{258.821(1.0988)^x}$$

(*b*) Coefficient of determination (r^2):

$$r = \frac{n \sum xy' - \sum x \sum y'}{\sqrt{[n \sum x^2 - (\sum x)^2][n \sum (y')^2 - (\sum y')^2]}} = \frac{13(253.107) - 91(35.094)}{\sqrt{[13(819) - 91^2][13(95.048) - 35.094^2]}} = 0.991$$

$r^2 = 0.982$

$$Y_{next} = Y_{14} = 258.821(1.0988)^{14} = \mathbf{\$967.967} \text{ thousands}$$

16.9 Company XYZ's annual sales are represented by the following multiple regression model:

$$Y = 35.0 + 0.09X_1 + 0.15X_2 + 0.7X_3$$

where Y = Company XYZ's sales in millions of dollars
X_1 = industry sales in millions of dollars
X_2 = advertising expenditures in thousands of dollars
X_3 = disposable income per household in thousands of dollars
$r^2 = 0.85$

(*a*) Determine next year's sales in millions of dollars, if $X_1 = 1200$, $X_2 = 216$, and $X_3 = 29$.

(*b*) Interpret the meaning of r^2.

(*a*) $Y = 35.0 + 0.09X_1 + 0.15X_2 + 0.7X_3$
$Y = 35 + 0.09(1200) + 0.15(216) + 0.7(29)$
$Y = \mathbf{\$195.7}$ millions

(*b*) The independent variables X_1, X_2, and X_3 explain 85% of the variation in the annual sales Y of Company XYZ.

16.10 A hypothetical stock pricing model is given as follows:

$$Y = 16.5 + 26.7X_1 + 0.03X_2 - 0.5X_3$$

where Y = stock price
X_1 = dividends
X_2 = S&P 500 index
X_3 = interest rate

Forecast the stock price Y, if $X_1 = \$1$, $X_2 = 720$, and $X_3 = 8.3\%$.

$$Y = 16.5 + 26.7X_1 + 0.03X_2 - 0.5X_3$$

$$Y = 16.5 + 26.7(1) + 0.03(720) + 0.5(8.3) = \mathbf{\$60.65}$$

16.11 The total cost (in thousands of dollars) of a manufacturing company is given by

$$Y = 15 + 1.2X + 0.4X^2$$

where Y is cost in thousands of dollars per period and X is production in thousands of units per period. Find the total cost, if the production plan is 15 000 units for the next period.

$$Y = 15 + 1.2X + 0.4X^2$$

If $X = 15\,000$, $Y = 15 + 1.2(15) + 0.4(15)^2 =$ **\$123** thousands

16.12 Company XYZ's multiple regression model is as follows:

$$S_t = 35.864 - 34.943P_t + 0.195t$$

where S_t is annual sales revenue in millions of dollars, P_t is the price of the product, and t is time in years. Forecast the sales revenue for the seventh year (S_7), if $P_7 = \$0.82$.

$$S_t = 35.864 - 34.943P_t + 0.195t$$

If $P_7 = \$0.82$ and $t = 7$, $S_7 = 35.864 - 34.943(0.82) + 0.195(7) =$ **\$8.576** millions

16.13 Consider the data of Problem 16.1. A firm has formulated a new regression model to estimate sales revenue. The new model has a 1-year lag between sales revenue and the number of sales representatives, as follows:

$$S_t = -5.708 + 0.24R_{t-1} + 0.737t$$

where S_t is annual sales revenue in millions of dollars, R_{t-1} is the number of sales representatives at $t - 1$ time period, and t is time in years. Forecast sales revenue at $t = 7$.

If $t = 7$, $R_{7-1} = R_6 = 28$,

$$S_t = -5.708 + 0.24R_{t-1} + 0.737t$$

$$S_7 = -5.708 + 0.24(28) + 0.737(7) = \textbf{\$6.171} \text{ millions}$$

16.14 Consider the data of Problem 16.1. Find the 95% confidence interval estimates for next year's sales revenue based on (*a*) number of sales representatives; (*b*) product price.

(*a*) Confidence interval for sales revenue based on number of sales representatives:

From tables, for 4 ($n - 2$) degrees of freedom and 95% confidence interval (5% significance level), $t = 2.776$.

$$S_E = \sqrt{\frac{\sum y^2 - a\sum y - b\sum x_1 y}{n-2}}$$

where $\sum y = 17.9, \sum y^2 = 68.11, \sum x_1 y = 480.1, a = -25.3169, b = 1.0815$

$$S_E = \sqrt{\frac{68.11 + 25.3169(17.9) - 1.0815(480.1)}{6-2}} = 0.717$$

From Part (*a*) of Problem 16.1, we have

$$Y_{\text{next}} = Y_7 = 7.128$$

$$\text{interval estimate} = Y_{\text{next}} \pm t(S_E) = 7.129 \pm 2.776(1.717) = \textbf{\$5.139, \$9.119} \text{ millions}$$

(*b*) Confidence interval for sales revenue based on product price:

$$\text{interval estimate} = Y_{\text{next}} \pm t(S_E)$$

From tables, for 4 ($n - 2$) degrees of freedom and 95% confidence interval (5% significance level), $t = 2.776$

$$S_E = \sqrt{\frac{\sum y^2 - a\sum y - b\sum xy}{n-2}}$$

where $\sum y = 17.9, \sum y^2 = 68.11, \sum xy = 15.852, a = 43.2112, b = -44.5327$

$$S_E = \sqrt{\frac{68.11 - 43.2112(17.9) + 44.5327(15.852)}{6-2}} = 0.750$$

From Part (*b*) of Problem 16.1, we have

$$Y_{next} = Y_7 = 6.694$$

$$\text{interval estimate} = Y_{next} \pm t(S_E) = 6.694 \pm 2.776(0.75) = \mathbf{\$4.612, \$8.776} \text{ millions}$$

16.15 For Problem 16.2, estimate the upper and lower limits for next year's annual sales, given 99% confidence interval.

$$\text{interval estimate} = Y_{next} \pm t(S_E)$$

From tables, for 6 ($n-2$) degrees of freedom and 99% confidence interval, $t = 3.707$.

$$S_E = \sqrt{\frac{\sum y^2 - a\sum y - b\sum xy}{n-2}}$$

where $\sum y = 842, \sum y^2 = 89\,160, \sum xy = 896\,251, a = 31.3298, b = 0.07$

$$S_E = \sqrt{\frac{89\,160 - 31.3298(842) - 0.07(896\,251)}{8-2}} = 2.669$$

From Part (*a*) of Problem 16.2, we have

$$Y_{next} = Y_9 = 122.33$$

$$\text{interval estimate} = y_{next} \pm t(S_E) = 122.33 \pm 3.707(2.669) = \mathbf{\$112.44, \$132.22} \text{ millions}$$

16.16 Consider the following data for the demand of cotton shirts (in thousands of units) over the past 5 periods.

Period:	1	2	3	4	5
Demand:	9	11	10	12	13

Compute the 3- and 5-period moving average forecasts for the sixth period.

The 3-period moving average forecast (F_6):

$$F_6 = \frac{A_3 + A_4 + A_5}{3} = \frac{10 + 12 + 13}{3} = 11.7 \quad \text{(in thousands)}$$

The 5-period moving average forecast (F_6):

$$F_6 = \frac{A_1 + A_2 + A_3 + A_4 + A_5}{5} = \frac{9 + 11 + 10 + 12 + 13}{5} = 11 \quad \text{(in thousands)}$$

16.17 The following time series shows the weekly sales (number of units) of a product over the past 8 weeks.

Week:	1	2	3	4	5	6	7	8
Sales:	32	34	35	33	36	35	37	35

(*a*) Compute the 2- and 4-period moving average forecasts. (*b*) Which averaging period results in the least MAD (Mean Absolute Deviation). (*c*) Forecast for the next week based on the answer to Part (*b*).

(*a*)

Week	Actual Value	MA(2)		MA(4)	
		Forecast (F_t)	Absolute Error	Forecast (F_t)	Absolute Error
1	32				
2	34				
3	35	33.0(1)	2.0		
4	33	34.5	1.5		
5	36	34.0	2.0	33.50(2)	2.50
6	35	34.5	0.5	34.50	0.50
7	37	35.5	1.5	34.75	2.25
8	35	36.0	1.0	35.25	0.25
Sum			8.5		5.50

(1): $F_3 = (32 + 34)/2 = 33$
(2): $F_5 = (32 + 34 + 35 + 33)/4 = 33.5$

(*b*) MAD(2-period) = 8.5/6 = 1.42; MAD(4-period) = 5.5/4 = **1.38**
MA(4) provides the least MAD.

(*c*) $F_9 = (36 + 35 + 37 + 35)/4 =$ **35.75**

16.18 Consider the following two time series data sets A and B:

Period	1	2	3	4	5	6	7	8	9	10
Set A	10	12	9	10	11	20	19	23	20	21
Set B	15	13	15	16	16	14	16	15	17	16

(*a*) Compute the 3-, 5-, and 7-period moving averages for time series A and B and find the respective forecasts for the eleventh period. (*b*) Which one of the above averaging periods provides the most accurate forecasts for each time series? (Use MSE.)

(*a*)

Period	Actual Value Set A	Forecasts (F_t): Set A			Actual Value Set B	Forecasts (F_t): Set B		
		MA(3)	MA(5)	MA(7)		MA(3)	MA(5)	MA(7)
1	10				15			
2	12				13			
3	9				15			
4	10	10.33			16	14.33		
5	11	10.33			16	14.67		
6	20	10.00	10.40		14	15.67	15.00	
7	19	13.67	12.40		16	15.33	14.80	
8	23	16.67	13.80	13.00	15	15.33	15.40	15.00
9	20	20.67	16.60	14.86	17	15.00	15.40	15.00
10	21	20.67	18.60	16.00	16	16.00	15.60	15.57
	F_{11}:	**21.33**	**20.60**	**17.71**	F_{11}:	**16.00**	**15.60**	**15.71**

Set A: using MA(3), $F_{11} = (23 + 20 + 21)/3 = \mathbf{21.33}$
using MA(5), $F_{11} = (20 + 19 + 23 + 20 + 21)/5 = \mathbf{20.60}$
using MA(7), $F_{11} = (10 + 11 + 20 + 19 + 23 + 20 + 21)/7 = \mathbf{17.71}$

Set B: using MA(3), $F_{11} = (15 + 17 + 16)/3 = \mathbf{16.00}$
using MA(5), $F_{11} = (14 + 16 + 15 + 17 + 16)/5 = \mathbf{15.60}$
using MA(7), $F_{11} = (16 + 16 + 14 + 16 + 15 + 17 + 16)/7 = \mathbf{15.71}$

(*b*) Time Series A:

Period	Actual Value	MA(3)			MA(5)			MA(6)		
		Forecast	Error	(Error)^2	Forecast	Error	(Error)^2	Forecast	Error	(Error)^2
1	10									
2	12									
3	9									
4	10	10.33	−0.33	0.11						
5	11	10.33	0.67	0.44						
6	20	10.00	10.00	100.00	10.4	9.6	92.16			
7	19	13.67	5.33	28.44	12.4	6.6	43.56			
8	23	16.67	6.33	40.11	13.8	9.2	84.64	13.00	10.00	100.00
9	20	20.67	−0.67	0.44	16.6	3.4	11.56	14.90	5.14	26.45
10	21	20.67	0.33	0.11	18.6	2.4	5.76	16.00	5.00	25.00
Sum				169.67			237.68			151.45

MSE(3-period) = 169.67/7 = **24.24**
MSE(5-period) = 237.68/5 = 47.54
MSE(7-period) = 151.45/3 = 50.48

For time series A, the averaging period of 3 results in the least MSE.

Time series B:

Period	Actual Value	MA(3)			MA(5)			MA(7)		
		Forecast	Error	(Error)^2	Forecast	Error	(Error)^2	Forecast	Error	(Error)^2
1	15									
2	13									
3	15									
4	16	14.33	1.67	2.78						
5	16	14.67	1.33	1.78						
6	14	15.67	−1.67	2.78	15.00	−1.00	1.00			
7	16	15.33	0.67	0.44	14.80	1.20	1.44			
8	15	15.33	−0.33	0.11	15.40	−0.40	0.16	15.00	0.00	0.00
9	17	15.00	2.00	4.00	15.40	1.60	2.56	15.00	2.00	4.00
10	16	16.00	0.00	0.00	15.60	0.40	0.16	15.57	0.43	0.18
Sum				11.89			5.32			4.18

MSE(3-period) = 11.89/7 = 1.70
MSE(5-period) = 5.32/5 = **1.06**
MSE(7-period) = 4.18/3 = 1.39

For time series B, the averaging period of 5 results in the least MSE.

16.19 Use the data in Problem 16.16 to compute a 3-period weighted moving average forecast for the next period, if the chronological weighting factors are 1/6, 2/6, and 3/6.

$$F_t = A_{t-3}(1/6) + A_{t-2}(2/6) + A_{t-1}(3/6)$$

$$F_6 = A_3(1/6) + A_4(2/6) + A_5(3/6) = 10(1/6) + 12(2/6) + 13(3/6) = \mathbf{12.17}$$

16.20 Refer to the data of Problem 16.5. (*a*) Find a 3-period weighted moving average forecast for the next year using the same weighting factors of 1/3 each. (*b*) Compute a 5-period weighted moving average forecast for the next year, if the chronological weighting factors are 1/9, 2/9, 3/9, 2/9, and 1/9.

(*a*) $F_t = A_{t-3}(1/3) + A_{t-2}(1/3) + A_{t-1}(1/3)$

$F_{14} = A_{11}(1/3) + A_{12}(1/3) + A_{13}(1/3)$

$= (A_{11} + A_{12} + A_{13})/3 = (740 + 775 + 792)/3 = \mathbf{769}$ (in thousands)

(*b*) $F_t = A_{t-5}(1/9) + A_{t-4}(2/9) + A_{t-3}(3/9) + A_{t-2}(2/9) + A_{t-1}(1/9)$

$F_{14} = A_9(1/9) + A_{10}(2/9) + A_{11}(3/9) + A_{12}(2/9) + A_{13}(1/9)$

$= 631(1/9) + 676(2/9) + 740(3/9) + 775(2/9) + 792(1/9) = \mathbf{727.22}$ (in thousands)

16.21 Use again the data of Problem 16.5 to find a 5-period weighted moving average forecast for the next year, if the chronological weighting factors are $-2/9$, $-4/9$, 3/9, 5/9, and 7/9.

$F_t = A_{t-5}(-2/9) + A_{t-4}(-4/9) + A_{t-3}(3/9) + A_{t-2}(5/9) + A_{t-1}(7/9)$

$F_{14} = A_9(-2/9) + A_{10}(-4/9) + A_{11}(3/9) + A_{12}(5/9) + A_{13}(7/9)$

$= 61(-2/9) + 676(-4/9) + 740(3/9) + 775(5/9) + 792(7/9) = \mathbf{852.56}$ (in thousands)

16.22 Refer to the data of Problem 16.7. Use the exponential smoothing technique to forecast next month's demand for $\alpha = 0.1$ and $\alpha = 0.3$. (Assume the first month's forecast equals 45.)

Month	Demand (A_t)	Forecasts ($\alpha = 0.1$)	Forecasts ($\alpha = 0.3$)
1	45		
2	48	45.00	45.00
3	50	45.30	45.90
4	53	45.77	47.13
5	57	46.49	48.89
6	62	47.54	51.32

Forecasts for seventh month:

$$F_t = F_{t-1} + \alpha(A_{t-1} - F_{t-1})$$

Given $\alpha = 0.1$: $F_7 = F_6 + 0.1(A_6 - F_6) = 47.54 + 0.1(62 - 47.54) = \mathbf{\$48.99}$ thousands

Given $\alpha = 0.3$: $F_7 = F_6 + 0.3(A_6 - F_6) = 51.32 + 0.3(62 - 51.32) = \mathbf{\$54.52}$ thousands

16.23 Consider the following sales data:

Period	1	2	3	4	5
Sales	360	327	375	405	396

(*a*) Compute the exponent smoothing values for the above data using $\alpha = 0.1$, 0.3, 0.5, 0.7, and 0.9; and find the respective forecasts for the sixth period. (*b*) Which α has the lowest MAD (Mean Absolute Deviation)?

(*a*)

Period	Sales (A_t)	Forecasts (F_t)				
		$\alpha = 0.1$	$\alpha = 0.3$	$\alpha = 0.5$	$\alpha = 0.7$	$\alpha = 0.9$
1	360					
2	327	360.00	360.00	360.00	360.00	360.00
3	375	356.70	350.10	343.50	336.90	330.30
4	405	358.53	357.57	359.25	363.57	370.53
5	396	363.18	371.80	382.13	392.57	401.55
	F_6	**366.46**	**379.06**	**389.07**	**394.97**	**396.56**

Forecasts for the sixth period:

$$F_t = F_{t-1} + \alpha(A_{t-1} - F_{t-1})$$

Given $\alpha = 0.1$: $F_6 = F_5 + 0.1(A_5 - F_5) = 363.18 + 0.1(396 - 363.18) = \mathbf{366.46}$

Given $\alpha = 0.3$: $F_6 = F_5 + 0.3(A_5 - F_5) = 371.80 + 0.3(396 - 371.80) = \mathbf{379.06}$

Given $\alpha = 0.5$: $F_6 = F_5 + 0.5(A_5 - F_5) = 382.13 + 0.5(396 - 382.13) = \mathbf{389.07}$

Given $\alpha = 0.7$: $F_6 = F_5 + 0.7(A_5 - F_5) = 392.57 + 0.7(396 - 392.57) = \mathbf{394.97}$

Given $\alpha = 0.9$: $F_6 = F_5 + 0.9(A_5 - F_5) = 401.55 + 0.9(396 - 401.55) = \mathbf{396.56}$

(*b*)

Period	Sales	$\alpha = 0.1$		$\alpha = 0.3$		$\alpha = 0.5$		$\alpha = 0.7$		$\alpha = 0.9$	
		F_t	Absolute Error	F_t	Absolute Error	F_t	Absolute Error	F_t	Absolute Error	F_t	Absolute Error
1	360										
2	327	360.00	33.00	360.00	33.00	360.00	33.00	360.00	33.00	360.00	33.00
3	375	356.70	18.30	350.10	24.90	343.50	31.50	336.90	38.10	330.30	44.70
4	405	358.53	46.47	357.57	47.43	359.25	45.75	363.57	41.43	370.53	34.47
5	396	363.18	32.82	371.80	24.20	382.13	13.87	392.57	3.43	401.55	5.55
Sum			130.59		129.53		124.12		115.96		117.72

MAD($\alpha = 0.1$) = 130.59/4 = 32.65 MAD($\alpha = 0.3$) = 129.53/4 = 32.38

MAD($\alpha = 0.5$) = 124.12/4 = 31.03 MAD($\alpha = 0.7$) = 115.96/4 = **28.99**

MAD($\alpha = 0.9$) = 117.72/4 = 29.43

The α value of 0.7 has the lowest mean absolute deviation (MAD = 28.99).

16.24 Refer to the data of Problem 16.18. (*a*) Compute the exponential smoothing values for time series A and B using $\alpha = 0.1$ and 0.9; and find the respective forecasts for the eleventh period. (*b*) Which α provides the most accurate forecasts for each time series? (Use MSE.)

(*a*)

Period	Actual Value (A_t) Set A	Forecasts (F_t): Set A		Actual Value (A_t) Set B	Forecasts (F_t): Set B	
		$\alpha = 0.1$	$\alpha = 0.9$		$\alpha = 0.1$	$\alpha = 0.9$
1	10			15		
2	12	10.00	10.00	13	15.00	15.00
3	9	10.20	11.80	15	14.80	13.20
4	10	10.08	9.28	16	14.82	14.82
5	11	10.07	9.93	16	14.94	15.88
6	20	10.16	10.89	14	15.05	15.99
7	19	11.14	19.09	16	14.95	14.20
8	23	11.93	19.01	15	15.06	15.82
9	20	13.04	22.60	17	15.05	15.08
10	21	13.74	20.26	16	15.25	16.81
	F_{11}:	**14.47**	**20.93**	F_{11}:	**15.33**	**16.08**

Forecasts for eleventh period—Set A:

$$F_t = F_{t-1} + \alpha(A_{t-1} - F_{t-1})$$

Given $\alpha = 0.1$: $F_{11} = F_{10} + 0.1(A_{10} - F_{10}) = 13.74 + 0.1(21 - 13.74) = \mathbf{14.47}$

Given $\alpha = 0.9$: $F_{11} = F_{10} + 0.9(A_{10} - F_{10}) = 20.26 + 0.9(21 - 20.26) = \mathbf{20.93}$

Forecasts for eleventh period—Set B:

Given $\alpha = 0.1$: $F_{11} = F_{10} + 0.1(A_{10} - F_{10}) = 15.25 + 0.1(16 - 15.25) = \mathbf{15.33}$

Given $\alpha = 0.9$: $F_{11} = F_{10} + 0.9(A_{10} - F_{10}) = 16.81 + 0.9(16 - 16.81) = \mathbf{16.08}$

(*b*) Time Series A:

Period	Actual Value	$\alpha = 0.1$			$\alpha = 0.9$		
		Forecast	Error	(Error)^2	Forecast	Error	(Error)^2
1	10						
2	12	10.00	2.00	4.00	10.00	2.00	4.00
3	9	10.20	−1.20	1.44	11.80	−2.80	7.84
4	10	10.08	−0.08	0.01	9.28	0.72	0.52
5	11	10.07	0.93	0.86	9.93	1.07	1.14
6	20	10.16	9.84	96.83	10.89	9.11	82.99
7	19	11.14	7.86	61.78	19.09	−0.09	0.01
8	23	11.93	11.07	122.54	19.01	3.99	15.92
9	20	13.04	6.96	48.44	22.60	−2.60	6.76
10	21	13.74	7.26	52.71	20.26	0.74	0.55
Sum				388.61			115.74

MSE($\alpha = 0.1$) = 388.61/9 = 43.18; MSE($\alpha = 0.9$) = 115.74/9 = **12.86**

Since the MSE for $\alpha = 0.9$ is smaller than the MSE for $\alpha = 0.1$, $\alpha = 0.9$ provides better forecasts than $\alpha = 0.1$ for time series A.

Time Series B:

Period	Actual Value	$\alpha = 0.1$			$\alpha = 0.9$		
		Forecast	Error	(Error)^2	Forecast	Error	(Error)^2
1	15						
2	13	15.00	−2.00	4.00	15.00	−2.00	4.00
3	15	14.80	0.20	0.04	13.20	1.80	3.24
4	16	14.82	16.00	1.39	14.82	1.18	1.39
5	16	14.94	1.06	1.12	15.88	0.12	0.01
6	14	15.05	−1.05	1.10	15.99	−1.99	3.96
7	16	14.95	1.05	1.10	14.20	1.80	3.24
8	15	15.06	−0.06	0.00	15.82	−0.82	0.67
9	17	15.05	1.95	3.80	15.08	1.92	3.69
10	16	15.25	0.75	0.56	16.81	−0.81	0.66
Sum				13.11			20.86

MSE($\alpha = 0.1$) = 13.11/9 = **1.46**; MSE($\alpha = 0.9$) = 20.86/9 = 2.32

Since the MSE for $\alpha = 0.1$ is smaller than the MSE for $\alpha = 0.9$, $\alpha = 0.1$ provides better forecasts than $\alpha = 0.9$ for time series B.

16.25 Company PQR has accumulated the following historical sales data with some missing information, as shown below:

	Dec.	Jan.	Feb.	Mar.	Apr.	May	Jun.
Actual (in thousands)	320		360			350	
Forecast (in thousands)			380		350	340	

Use exponential smoothing with $\alpha = 0.5$ for answering the following questions. (*a*) Find the sales forecasts for March and June. (*b*) Find the actual values for March and April. (*c*) It has been found that the actual sales in December was wrongly entered as 320 instead of the correct 384. Find the forecast for June.

(*a*) If forecast in December is F_1 and actual value in December is A_1,

$$F_{\text{March}} = F_4 = F_3 + \alpha(A_3 - F_3) + 380 + 0.5(360 - 380) = \mathbf{\$370} \text{ thousands}$$

$$F_{\text{June}} = F_7 = F_6 + \alpha(A_6 - F_6) = 340 + 0.5(350 - 340) = \mathbf{\$345} \text{ thousands}$$

(*b*) The actual value in March (A_4) can be determined as follows:

$$F_5 = F_4 + \alpha(A_4 - F_4) = F_4 + \alpha A_4 - \alpha F_4 = \alpha A_4 + (1 - \alpha)F_4$$

(or) $$\alpha A_4 = F_5 - (1 - \alpha)F_4$$

(or) $$A_4 = [F_5 - (1 - \alpha)F_4]/\alpha = [350 - 0.5(370)]/0.5 = \mathbf{\$330} \text{ thousands}$$

Similarly, actual value in April (A_5) is given by:

$$A_5 = [F_6 - (1 - \alpha)F_5]/\alpha = [340 - 0.5(350)]/0.5 = \mathbf{\$330} \text{ thousands}$$

(*c*) The exponential smoothing model is given by

$$F_{t+1} = F_t + \alpha(A_t - F_t) = \alpha A_t + (1 - \alpha)F_t$$

Substituting $t + 1 = 7$ for June,

$$\begin{aligned} F_{\text{June}} = F_7 &= \alpha A_6 + (1 - \alpha)F_6 \\ &= \alpha A_6 + (1 - \alpha)[\alpha A_5 + (1 - \alpha)F_5] \\ &= \alpha A_6 + \alpha(1 - \alpha)A_5 + (1 - \alpha)^2 F_5 \\ &= \alpha A_6 + \alpha(1 - \alpha)A_5 + (1 - \alpha)^2[\alpha A_4 + (1 - \alpha)F_4] \\ &= \alpha A_6 + \alpha(1 - \alpha)A_5 + \alpha(1 - \alpha)^2 A_4 + (1 - \alpha)^3 F_4 \end{aligned}$$

and so on. As a result,

$$F_7 = \alpha A_6 + \alpha(1 - \alpha)A_5 + \alpha(1 - \alpha)^2 A_4 + \alpha(1 - \alpha)^3 A_3 + \alpha(1 - \alpha)^4 A_2 + \alpha(1 - \alpha)^5 A_1 + \alpha(1 - \alpha)^6 F_1$$

Using the data from the table (with actual sales in December = 320), sales forecast for June:

$$F_7 = 0.5(350) + 0.5^2(330) + 0.5^3(330) + 0.5^4(360) + 0.5^5 A_2 + 0.5^6(320) + 0.5^6 F_1$$

Using the data from the table (with actual sales in December = 384), corrected sales forecast for June:

$$F'_7 = 0.5(350) + 0.5^2(330) + 0.5^3(330) + 0.5^4(360) + 0.5^5 A_2 + 0.5^6(384) + 0.5^6 F_1$$

$$F'_7 - F_7 = 0.5^6(384) - 0.5^6(320) = 0.5^6(384 - 320) = 1$$

$$F_7 = F'_7 + 1$$

From Part (*a*), $F_7 = \$345$

Thus, $F'_7 = 345 + 1 =$ **\$346** thousands

16.26 Refer to Problem 16.25. Suppose the company uses a 5-month moving average technique to forecast sales. What is the new forecast for June?

The 5-month moving average for May (F_6):

$$F_6 = (A_1 + A_2 + A_3 + A_4 + A_5)/5$$

where $A_1 = 320$, $A_3 = 360$, and $F_6 = 340$

$$340 = (320 + A_2 + 360 + A_4 + A_5)/5$$

(or) $$A_2 + 360 + A_4 + A_5 = 5(340) - 320 = 1380$$

Thus, $A_2 + A_3 + A_4 + A_5 = 1380$

The 5-month moving average for June (F_7):

$$F_7 = (A_2 + A_3 + A_4 + A_5 + A_6)/5$$

where $A_2 + A_3 + A_4 + A_5 = 1380$ and $A_6 = 350$

$$F_7 = (1380 + 350)/5 = \textbf{\$346} \text{ thousands}$$

16.27 Refer to the data of Problem 16.6. (*a*) Compare a 3-point moving average forecast and an exponential smoothing forecast with $\alpha = 0.7$. Using MSE over the past 8 periods, find which one provides better forecasts. (*b*) What is the forecast for next year?

(*a*)

Time	Actual Value (A_t)	Moving Average AP = 3			Exponential Smoothing $\alpha = 0.7$		
		Forecast (F_t)	Error	Squared Error	Forecast (F_t)	Error	Squared Error
1	9.94						
2	11.25				**9.940**		
3	11.98				**10.857**		
4	10.91	**11.057**	0.147	0.022	**11.643**	0.733	0.537
5	8.83	**11.380**	2.550	6.503	**11.130**	2.300	5.290
6	10.40	**10.573**	0.173	0.030	**9.520**	0.880	0.774
7	8.90	**10.047**	1.147	1.316	**10.136**	1.236	1.528
8	10.26	**9.377**	0.883	0.780	**9.271**	0.989	0.978
9	11.64	**9.853**	1.787	3.193	**9.963**	1.677	2.812
10	13.80	**10.267**	3.533	12.482	**11.137**	2.663	7.092
11	15.10	**11.900**	3.100	9.160	**13.001**	2.099	4.406
Sum of squared errors (SSE)				33.936			23.417
Mean squared errors (MSE = SSE/8)				4.242			**2.927**

Exponential smoothing ($\alpha = 0.7$) provides better forecasts because it has the least MSE.

(*b*) $F_{12} = F_{11} + \alpha(A_{11} - F_{11}) = 13.001 + 0.7(15.1 - 13.001) = \mathbf{14.47}$ millions

16.28 Refer to the data of Problem 16.23. Use the exponential smoothing with trend model with $\alpha = 0.7$ and $\beta = 0.3$ to forecast sales for the next three periods. (Start the analysis from period 2 and assume $S_2 = 327$ and $T_2 = -33$.)

Period	Actual Value (A_t)	S_t ($\alpha = 0.7$)	T_t ($\beta = 0.3$)	F_t
1	360			
2	327	327.00(1)	−33.00(2)	
3	375	350.70(3)	−15.99(4)	294.00(5)
4	405	383.91	−1.23	334.71
5	396	392.00	1.57	382.68

(1): $S_2 = A_2 = 327$
(2): $T_2 = A_2 - A_1 = 327 - 360 = -33$
(3): $S_3 = 0.7A_3 + (1 - 0.7)(S_2 + T_2) = 0.7(375) + 0.3(327 - 33) = 350.7$
(4): $T_3 = 0.3(S_3 - S_2) + (1 - 0.3)T_2 = 0.3(350.7 - 327) + 0.7(-33) = -15.99$
(5): $F_3 = S_2 + T_2 = 327 - 33 = 294$

$$F_6 = S_5 + T_5 = 392 + 1.57 = \mathbf{393.57}$$

$$F_7 = S_5 + 2(T_5) = 392 + 2(1.57) = \mathbf{395.14}$$

$$F_8 = S_5 + 3(T_5) = 392 + 3(1.57) = \mathbf{396.71}$$

16.29 Refer to Problem 16.28. (*a*) Repeat the procedure with $\alpha = 0.3$ and $\beta = 0.7$. (*b*) Compare the results with those of Problem 16.28, with respect to forecast errors (mean absolute deviations).

(a)

Period	Actual Value (A_t)	S_t ($\alpha = 0.3$)	T_t ($\beta = 0.7$)	F_t
1	360			
2	327	327.00(1)	−33.00(2)	
3	375	318.30(3)	−15.99(4)	294.00(5)
4	405	333.12	5.58	302.31
5	396	355.89	17.61	338.70

(1): $S_2 = A_2 = 327$
(2): $T_2 = A_2 - A_1 = 327 - 360 = -33$
(3): $S_3 = 0.3A_3 + (1 - 0.3)(S_2 + T_2) = 0.3(375) + 0.7(327 - 33) = 318.3$
(4): $T_3 = 0.7(S_3 - S_2) + (1 - 0.7)T_2 = 0.7(318.3 - 327) + 0.3(-33) = -15.99$
(5): $F_3 = S_2 + T_2 = 327 - 33 = 294$

$$F_6 = S_5 + T_5 = 355.89 + 17.61 = \mathbf{393.57}$$
$$F_7 = S_5 + 2(T_5) = 355.89 + 2(17.61) = \mathbf{395.14}$$
$$F_8 = S_5 + 3(T_5) = 392 + 3(1.57) = \mathbf{396.71}$$

(b)

Period	Actual Value (A_t)	F_t ($\alpha = 0.7, \beta = 0.3$)	Absolute Error	F_t ($\alpha = 0.3, \beta = 0.7$)	Absolute Error
1	360	–	–	–	–
2	327	–	–	–	–
3	375	294.00	81.00	294.00	81.00
4	405	334.71	70.29	302.31	102.69
5	396	382.68	13.32	338.70	57.30

Mean Absolute Deviation (MAD), given $\alpha = 0.7$ and $\beta = 0.3$:

$$(81 + 70.29 + 13.32)/3 = \mathbf{54.87}$$

Mean Absolute Deviation (MAD), given $\alpha = 0.3$ and $\beta = 0.7$:

$$(81 + 102.69 + 57.3)/3 = \mathbf{80.33}$$

Thus the model with $\alpha = 0.7$ and $\beta = 0.3$ provides better forecasts than the model with $\alpha = 0.3$ and $\beta = 0.7$.

16.30 Refer to the data of Problem 16.7. Use exponential smoothing with trend to forecast next month's demand for $\alpha = 0.1$ and $\beta = 0.1$ and 0.5. (Start the analysis from period 2 and assume $S_2 = A_2$ and $T_2 = A_2 - A_1$.) What role does β play?

Month	Demand (A_t)	S_t ($\alpha = 0.1$)	T_t ($\beta = 0.1$)	F_t
1	45			
2	48	48.00(1)	3.00(2)	
3	50	50.90(3)	2.99(4)	51.00(5)
4	53	53.80	2.98	53.89
5	57	56.80	2.98	56.78
6	62	60.00	3.00	59.78

(1): $S_2 = A_2 = 48$
(2): $T_2 = A_2 - A_1 = 3$
(3): $S_3 = 0.1A_3 + (1 - 0.1)(S_2 + T_2) = 0.1(50) + 0.9(48 + 3) = 50.9$
(4): $T_3 = 0.1(S_3 - S_2) + (1 - 0.1)T_2 = 0.1(50.9 - 48) + 0.9(3) = 2.99$
(5): $F_3 = S_2 + T_2 = 48 + 3 = 51$

Forecast for next month's demand:

$$F_7 = S_6 + T_6 = 60 + 3 = \mathbf{\$63} \text{ thousands}$$

Month	Demand (A_t)	S_t ($\alpha = 0.1$)	T_t ($\beta = 0.1$)	F_t
1	45			
2	48	48.00(1)	3.00(2)	
3	50	50.90(3)	2.95(4)	51.00
4	53	53.77	2.91	53.85(5)
5	57	56.71	2.93	56.68
6	62	59.88	3.05	59.64

(1): $S_2 = A_2 = 48$
(2): $T_2 = A_2 - A_1 = 3$
(3): $S_3 = 0.1A_3 + (1 - 0.1)(S_2 + T_2) = 0.1(50) + 0.9(48 + 3) = 50.9$
(4): $T_3 = 0.5(S_3 - S_2) + (1 - 0.5)T_2 = 0.5(50.9 - 48) + 0.5(3) = 2.95$
(5): $F_4 = S_3 + T_3 = 50.9 + 2.95 = 53.85$

Forecast for next month's demand:

$$F_7 = S_6 + T_6 = 59.88 + 3.05 = \mathbf{\$62.93} \text{ thousands}$$

Large values of β give more weight to recent changes (short-term) and less weight to past changes (long-term) in trend.

16.31 The following table shows the forecasts by three models for the data of Problem 16.23. Which models would you prefer based on SSE and MAD?

Actual Value	Forecast Values		
	Model 1	Model 2	Model 3
360	353	343	357
327	331	358	345
375	369	330	379
405	395	371	407
396	391	403	401

Consider Model 1:

$$\text{MAD} = (|360 - 353| + |327 - 331| + |375 - 369| + |405 - 395| + |396 - 391|)/5 = \mathbf{6.4}$$

$$\text{SSE} = (360 - 353)^2 + (327 - 331)^2 + (375 - 369)^2 + (405 - 395)^2 + (396 - 391)^2 = \mathbf{226}$$

Consider Model 2:

$$\text{MAD} = (|360 - 343| + |327 - 358| + |375 - 330| + |405 - 371| + |396 - 403|)/5 = \mathbf{26.8}$$

$$\text{SSE} = 17^2 + 31^2 + 45^2 + 34^2 + 7^2 = \mathbf{4480}$$

Consider Model 3:

$$\text{MAD} = (|360 - 357| + |327 - 345| + |375 - 379| + |405 - 407| + |396 - 401|)/5 = \mathbf{6}$$

$$\text{SSE} = (360 - 357)^2 + (327 - 345)^2 + (375 - 379)^2 + (405 - 407)^2 + (396 - 401)^2 = \mathbf{366}$$

We would prefer Model 1 based on SSE and Model 3 based on MAD.

16.32 Consider the following time series data on quarterly sales for a corporation from the Valueline Publication:

Year	Quarterly Sales (in millions of dollars)			
	Q_1	Q_2	Q_3	Q_4
1	25.8	33.4	38.6	34.1
2	25.1	40.6	43.1	42.6
3	37.7	54.5	56.1	47.2

(*a*) Find the 4-quarter centered moving average values for the above data. (*b*) Calculate seasonal indexes for the 4 quarters.

(*a*)

Time Period	Sales ($ millions)	4-Quarter Moving Average	4-Quarter Centered Moving Average
1 Q_1	25.8		
1 Q_2	33.4		
		32.975(1)	
1 Q_3	38.6		32.888(2)
		32.800	
1 Q_4	34.1		33.700
		34.600	
2 Q_1	25.1		35.163
		35.725	
2 Q_2	40.6		36.788
		37.850	
2 Q_3	43.1		39.425
		41.000	
2 Q_4	42.6		42.738
		44.475	
3 Q_1	37.7		46.100
		47.725	
3 Q_2	54.5		48.300
		48.875	
3 Q_3	56.1		
3 Q_4	47.2		

(1): $(25.8 + 33.4 + 38.6 + 34.1)/4 = 32.975$
(2): $(32.975 + 32.8)/2 = 32.888$

(*b*)

Time Period	t	Sales (y)	4-Quarter Centered Moving Average (MA)	y/MA
1 Q_1	1	25.8		
1 Q_2	2	33.4		
1 Q_3	3	38.6	32.888	1.174
1 Q_4	4	34.1	33.700	1.102
2 Q_1	5	25.1	35.163	0.714
2 Q_2	6	40.6	36.788	1.104
2 Q_3	7	43.1	39.425	1.093
2 Q_4	8	42.6	42.738	0.997
3 Q_1	9	37.7	46.100	0.818
3 Q_2	10	54.5	48.300	1.128
3 Q_3	11	56.1		
3 Q_4	12	47.2		

Year	Quarter 1	Quarter 2	Quarter 3	Quarter 4	Total
1			1.174	1.012	
2	0.714	1.104	1.093	0.997	
3	0.818	1.128			
Quarterly average	0.766	1.116	1.1335	1.0045	4.02
Seasonal Index (SI)	**0.7622**(1)	**1.1104**	**1.1279**	**0.9995**	4

(1): $0.766 \times (4/4.02) = 0.7622$

16.33 Refer to Problem 16.32. (*a*) Using the seasonal indexes, compute the deseasonalized values for year 3. (*b*) If the trend line for deseasonalized time series is $T_t = 27.672 + 1.872t$, find a quarterly forecast for next year based on the trend. (*c*) Assuming the data set has no cyclical pattern, what are the forecasts for year 4? (*d*) If the cyclical values for year 4 are assumed to be 1.012, 0.984, 0.979, and 0.941 respectively, what are the forecasts for year 4?

(*a*) Deseasonalized Value = Actual Value/Seasonal Index = y/SI.

Time Period	Sales (y)	SI	Deseasonalized Values (y/SI)
3 Q_1	37.7	0.7622	**49.46** (in millions of dollars)
3 Q_2	54.5	1.1104	**49.08** (in millions of dollars)
3 Q_3	56.1	1.1279	**49.74** (in millions of dollars)
3 Q_4	47.2	0.9995	**47.22** (in millions of dollars)

(*b*) Deseasonalized Trend Forecast: $T_t = 27.672 + 1.872t$

4 Q_1: $F_{13} = 27.672 + 1.872(13) =$ **52.01** (in millions of dollars)
4 Q_2: $F_{14} = 27.672 + 1.872(14) =$ **53.88** (in millions of dollars)
4 Q_3: $F_{15} = 27.672 + 1.872(15) =$ **55.75** (in millions of dollars)
4 Q_4: $F_{16} = 27.672 + 1.872(16) =$ **57.62** (in millions of dollars)

(*c*) If no cyclical patterns exist; Forecast = Deseasonalized Trend Forecast × Seasonal Index

4 Q_1: $F_{13} = 52.01 \times 0.7622 =$ **39.64** (in millions of dollars)
4 Q_2: $F_{14} = 53.88 \times 1.1104 =$ **59.83** (in millions of dollars)
4 Q_3: $F_{15} = 55.75 \times 1.1279 =$ **62.88** (in millions of dollars)
4 Q_4: $F_{16} = 57.62 \times 0.9995 =$ **57.59** (in millions of dollars)

(*d*) Forecast = Trend × Seasonal Index × Cyclical Factor

4 Q_1: $F_{13} = 52.01 \times 0.7622 \times 1.012 =$ **40.12** (in millions of dollars)
4 Q_2: $F_{14} = 53.88 \times 1.1104 \times 0.984 =$ **58.87** (in millions of dollars)
4 Q_3: $F_{15} = 55.75 \times 1.1279 \times 0.979 =$ **61.56** (in millions of dollars)
4 Q_4: $F_{16} = 57.62 \times 0.9995 \times 0.941 =$ **54.19** (in millions of dollars)

16.34 The ABC Video Store wants to forecast the number of video rentals each day, based on the previous three-week data given below:

Day	Week 1	Week 2	Week 3
Sunday	310	321	315
Monday	105	132	117
Tuesday	121	125	130
Wednesday	136	129	135
Thursday	188	205	196
Friday	303	292	313
Saturday	422	414	403

(*a*) If the linear trend line from regression analysis for the above data is $Y = 195.3142 + 3.075X$, compute the seasonal indexes. (*b*) Assuming the data set has no cyclical pattern, forecast the number of daily rentals for the next 3 days. (Use the above regression equation for the deseasonalized trend forecast.)

(*a*)

Week	Day	Number of Video Rentals (y)	Trend Line (Y)	y/Y
1	Sun	310	198.39(1)	1.563(2)
	Mon	105	201.46	0.521
	Tue	121	204.54	0.592
	Wed	136	207.62	0.655
	Thu	188	210.69	0.892
	Fri	303	213.77	1.417
	Sat	422	216.84	1.946
2	Sun	321	219.92	1.46
	Mon	132	222.99	0.592
	Tue	125	226.07	0.553
	Wed	129	229.14	0.563
	Thu	205	232.22	0.883
	Fri	292	235.29	1.241
	Sat	414	238.37	1.737
3	Sun	315	241.44	1.305
	Mon	117	244.52	0.478
	Tue	130	247.59	0.525
	Wed	135	250.67	0.539
	Thu	196	253.75	0.772
	Fri	313	256.82	1.219
	Sat	403	259.9	1.551

(1): $195.3142 + 3.075(1) = 198.39$ (2): $310/198.39 = 1.563$

Week	Sun	Mon	Tue	Wed	Thu	Fri	Sat	Sum
1	1.563	0.521	0.592	0.655	0.892	1.417	1.946	
2	1.46	0.592	0.553	0.563	0.883	1.241	1.737	
3	1.305	0.478	0.525	0.539	0.772	1.219	1.551	
Weekly average	1.443(3)	0.53	0.557	0.586	0.849	1.292	1.745	7.0013
Seasonal Index (SI)	**1.442(4)**	**0.53**	**0.557**	**0.586**	**0.849**	**1.292**	**1.744**	7

(3): $(1.563 + 1.460 + 1.305)/3 = 1.443$
(4): $1.443 \times (7/7.001333) = 1.442$

(*b*) If no cyclical patterns exist, Forecast = Trend Forecast × Seasonal Index

$$F_{4,\text{sun}} = [195.3142 + 3.075(22)] \times (1.442) = \mathbf{379.19}$$
$$F_{4,\text{mon}} = [195.3142 + 3.075(23)] \times (0.530) = \mathbf{141.00}$$
$$F_{4,\text{tue}} = [195.3142 + 3.075(24)] \times (0.557) = \mathbf{149.90}$$

16.35 The deseasonalized sales forecasts (in thousands of units) and the seasonal indexes for the 4 quarters of the next year are as follows:

	Q_1	Q_2	Q_3	Q_4
Deseasonalized Sales	792	801	796	787
Seasonal Index	0.842	1.134	1.211	0.813

Find the corresponding seasonalized quarterly sales forecasts.

Seasonalized Forecast = Seasonal Index × Deseasonalized Forecast

$F_{Q1} = 0.842 \times 792 = \mathbf{666.864}$ (in thousands of units)
$F_{Q2} = 1.134 \times 801 = \mathbf{908.334}$ (in thousands of units)
$F_{Q3} = 1.211 \times 796 = \mathbf{963.956}$ (in thousands of units)
$F_{Q4} = 0.813 \times 787 = \mathbf{639.831}$ (in thousands of units)

16.36 Refer to Problem 16.33. If cyclical factors exist and their values for the next 4 quarters are 0.982, 0.992, 0.989, and 1.015, respectively, forecast next year's quarterly sales.

If cyclical factors exist, Forecast = Seasonal Index × Cyclical Factor × Deseasonalized Forecast

$F_{Q1} = 0.842 \times 0.982 \times 792 = \mathbf{654.860}$ (in thousands of units)
$F_{Q2} = 1.134 \times 0.992 \times 801 = \mathbf{901.067}$ (in thousands of units)
$F_{Q3} = 1.211 \times 0.989 \times 796 = \mathbf{953.352}$ (in thousands of units)
$F_{Q4} = 0.813 \times 1.015 \times 787 = \mathbf{649.428}$ (in thousands of units)

Supplementary Problems

16.37 Refer to the data of Problem 16.7. The marketing manager of the company finds the advertising expenses to be closely related to the demand. The advertising expenses are as follows:

Period	1	2	3	4	5	6
Advertising Expenses (thousands of \$)	20	22	22	24	25	28

(*a*) Forecast next period's demand using simple linear regression, if the company plans to increase its advertising expenses to \$30 000 next period. (*b*) Find the coefficient of correlation and the coefficient of determination.

16.38 Refer to the data of Problem 16.7. (*a*) Find the time series linear equation and the forecast for next period's demand. (*b*) Calculate the coefficient of determination.

16.39 Compare the results of Problems 16.7, 16.37, and 16.38. Which model would you choose? Why?

16.40 Refer to the data of Problem 16.18. (*a*) Find the time series linear regression equation and the next period forecast for each time series A and B. (*b*) Calculate the coefficient of determination for each time series.

16.41 Refer to the data of Problem 16.32. Find the time series linear regression equation and the forecasts for next 4 quarters' sales.

16.42 In Problem 16.37, find a 95% confidence interval estimate for next period's demand.

16.43 In Problem 16.38, find a 95% confidence interval estimate for next period's demand.

16.44 In Problem 16.41, find a 99% confidence interval estimate for next quarter's sales.

16.45 For the data of Problem 16.5, develop the time series log-linear regression equation in the form $\ln(Y) = a + bX$ and find the coefficient of determination.

16.46 Compare the results of Problems 16.5, 16.8, and 16.45. Which model would you prefer? Why?

16.47 For the data of Problem 16.7, find the time series log-linear regression equation in the form $\log Y = a + bX$ and find the coefficient of determination. What is the forecast for the next period?

16.48 Refer to the data of Problem 16.5. The quadratic regression model for the data is as follows:

$$Y = 207.53 + 44.98T + 0.15T^2$$

where Y is the computer services employment in thousands and T is the time in years. Forecast next year's computer services employment.

16.49 Refer to the data of Problem 16.16. Compare a 3-period moving average forecast and an exponential smoothing forecast with $\alpha = 0.9$. Using MAD, find which one provides better forecasts. What is the forecast for next period?

16.50 Consider the data of Problem 16.34. (*a*) Compare the moving average forecasts for the last 10 days, using averaging periods of 3, 5, and 7 days. Which one of the above three averaging periods has the least MAD? (*b*) Estimate the number of video rentals for the next day, using the averaging period from Part (*a*).

16.51 Consider the data of Problem 16.34. (*a*) Compare the exponential smoothing forecasts for the last 10 days, using $\alpha = 0.1$, 0.5, and 0.9. (Assume the forecast for Wednesday of week 2 to be 129.) Which α value gives the least MAD over the last 10 days? (*b*) Find the forecast for the next day, using the α from Part (*a*).

16.52 Compare the results of Problem 16.50 with those of Problem 16.51. Which method would you choose? Why?

16.53 Refer to the data of Problem 16.17. Compare the exponential smoothing forecasts for $\alpha = 0.2$, 0.4, and 0.6. Which α has the lowest MAD?

16.54 Refer to the data of Problem 16.17. Compute a 3-period weighted moving averages forecast for next week, if the chronological weighting factors are 1/6, 2/6, and 3/6.

16.55 Refer to the data of Problem 16.30. Use exponential smoothing with trend to forecast next month's demand for $\alpha = 0.1$ and $\beta = 0.3$.

16.56 Compare the demand forecasts of Problems 16.30 and 16.55, with respect to MSE (Mean Squared Error).

16.57 For Problem 16.41, calculate the seasonal indexes, using the regression equation.

Chapter 17

Game Theory

GAMES

A *game* is a competitive situation among N persons or groups, called *players*, that is conducted under a prescribed set of rules with known payoffs. The rules define the elementary activities, or *moves*, of the game. Different players may be allowed different moves, but each player knows the moves available to the other players.

If one player wins what another player loses, the game is called a *zero-sum* game. A *two-person* game is a game having only two players. Two-person, zero-sum games, also called *matrix games*, will be the only type of games considered in this chapter.

STRATEGIES

A *pure strategy* is a predetermined plan that prescribes for a player the sequence of moves and countermoves he will make during a complete game. In a matrix game, either player has a finite set of pure strategies, although their number may be enormous. Player I (II) knows player II's (I's) set, but he does not know for sure which element of the set II (I) has picked at the commencement of a given play of the game. Thus, a complete characterization of the game is provided by its *payoff matrix*, Table 17-1, which gives the amount g_{ij} won by player I from player II when I plays his ith pure strategy, A_i, and II plays his jth pure strategy, B_j. (The matrix of payoffs to player II is the negative of the above matrix.)

Table 17-1

		Player II			
		B_1	B_2	$\cdots$	B_n
Player I	A_1	g_{11}	g_{12}	$\cdots$	g_{1n}
	A_2	g_{21}	g_{22}	$\cdots$	g_{2n}
	$\cdots$	$\cdots$	$\cdots$	$\cdots$	$\cdots$
	A_m	g_{m1}	g_{m2}	$\cdots$	g_{mn}

Table 17-2

		Player II		
		1	2	3
Player I	1	2	−3	4
	2	−3	4	−5
	3	4	−5	6

Example 17.1 Consider the game in which two players simultaneously reveal 1, 2, or 3 fingers each. If the sum of the revealed fingers is even, player II pays to player I the sum in dollars; if the sum is odd, player I pays to player II the sum in dollars.

For this very simple two-person, zero-sum game, the pure strategies can be identified with the individual moves. (This could not be done for, say, ticktacktoe, in which a single pure strategy might run: "If he moves first to the center, I will move to the upper right-hand corner; if he then moves to the lower right-hand corner, I will . . . .") Furthermore, both players have the same set of pure strategies, $\{1, 2, 3\}$. The payoff matrix is given in Table 17-2.

The objective in game theory is to determine a "best" strategy for a given player under the assumption that the opponent is rational and will make intelligent countermoves. Consequently, if one player always chooses the same pure strategy or chooses pure strategies in a fixed order, his opponent will in time

Copyrighted Material

recognize the pattern and will move to defeat it, if possible. Generally, therefore, the most effective strategy is a *mixed strategy*, defined by a probability distribution over the set of pure strategies. For the game of Table 17-1, a mixed strategy for player I will be specified by a probability vector

$$\mathbf{X} \equiv [x_1, x_2, \ldots, x_m]^T$$

where x_i $(i = 1, \ldots, m)$ is the proportion of time (i.e., the relative frequency or probability) that A_i is chosen. Similarly, a mixed strategy for player II will be designated by

$$\mathbf{Y} \equiv [y_1, y_2, \ldots, y_n]^T$$

where y_j $(j = 1, \ldots, n)$ is the probability that B_j is chosen. As probabilities, the x_i and y_j are nonnegative, with

$$\sum_{i=1}^{m} x_i = \sum_{j=1}^{n} y_j = 1$$

Example 17.2 In the game of Example 17.1, if player I always shows 3 fingers, player II can defeat that pure strategy by always showing 2 fingers. If player I adopts the set sequence of pure strategies 3, 3, 2, 3, 3, 2, 3, 3, 2, ..., player II can defeat it with the sequence 2, 2, 3, 2, 2, 3, 2, 2, 3, ...

If player I adopts the mixed strategy $\mathbf{X} = [1/6, 1/3, 1/2]^T$, then player I plans to show 1 finger one-sixth of the time, 2 fingers one-third of the time, and 3 fingers one-half of the time. To implement the strategy, player I could roll one die before each play. If the die showed a 1 (having probability 1/6), he would show 1 finger; if the die showed a 2 or 3 (having probability $2/6 = 1/3$), he would show 2 fingers; if the die showed 4, 5, or 6 (having probability $3/6 = 1/2$), he would show 3 fingers.

STABLE GAMES

Suppose that the players of the game defined by Table 17-1 are restricted to using pure strategies. Write:

$$\begin{aligned} m_I &\equiv \text{maximum value of the minimum gain to player I} \\ &\equiv \underset{i=1,\ldots,m}{\text{maximum}} \left(\underset{j=1,\ldots,n}{\text{minimum}} \{g_{ij}\}\right) \end{aligned} \tag{17.1}$$

$$\begin{aligned} m_{II} &\equiv \text{minimum value of the maximum loss to player II} \\ &\equiv \underset{j=1,\ldots,n}{\text{minimum}} \left(\underset{i=1,\ldots,m}{\text{maximum}} \{g_{ij}\}\right) \end{aligned} \tag{17.2}$$

If player I plays the row that yields the maximum in (*17.1*)—the *maximin strategy*—he is assured of winning an amount m_I *at worst*; whereas, by playing another row, he could win less than m_I. (Equivalently, under the maximin strategy, player *I* loses $-m_I$ *at worst*.) Analogously, if player II plays the column that yields the minimum in (*17.2*)—the *minimax strategy*—his assured loss (which is I's gain) will be m_{II} *at worst*. We shall say that these two strategies satisfy the *minimax criterion*.

Now, by their definitions,

$$m_I \leq m_{II} \tag{17.3}$$

for any matrix game. If $m_I = m_{II}$, then player I would only worsen his position by departing from the maximin strategy, and player II would only worsen his position by departing from the minimax strategy. Such a game is *stable*, and the strategies prescribed by the minimax criterion are *optimal* for the two players. Furthermore, both players can agree as to what a play of the game is worth (to player I); namely,

$$G^* = m_I = m_{II}$$

The number G^* is called the *value* of the game; it is the amount paid by player II to player I when both players have used their optimal strategies.

In summary: Every stable game has a unique value, and an optimal (pure) strategy for either player. (Note that the optimal strategies need not be unique.)

UNSTABLE GAMES

When the inequality holds in (*17.3*), the game is *unstable*, and the pure strategies dictated by the minimax criterion are no longer optimal. The fundamental result in the theory of matrix games is that, when *mixed* strategies are admitted, unstable games also have a solution—i.e., optimal strategies and a value—provided that the random payoff is replaced by its *expected value*.

Under mixed strategies (defined by the probability vectors **X** for player I and **Y** for player II, the payoff from II to I is a random variable having expected value

$$E(\mathbf{X}, \mathbf{Y}) \equiv \sum_{i=1}^{m} \sum_{j=1}^{n} g_{ij} x_i y_j \tag{17.4}$$

Analogous to (*17.1*) and (*17.2*), write:

$$\begin{aligned} M_I &\equiv \text{maximum value of minimum expected gain to player I} \\ &\equiv \max_{\mathbf{X}} (\min_{\mathbf{Y}} E(\mathbf{X}, \mathbf{Y})) \end{aligned} \tag{17.5}$$

$$\begin{aligned} M_{II} &\equiv \text{minimum value of maximum expected loss to player II} \\ &\equiv \min_{\mathbf{Y}} (\max_{\mathbf{X}} E(\mathbf{X}, \mathbf{Y})) \end{aligned} \tag{17.6}$$

in which **X** and **Y** run through all m-dimensional and all n-dimensional probability vectors, respectively. Then we have the

Minimax theorem: For any game matrix, there exist optimal strategies $\mathbf{X}^*$ and $\mathbf{Y}^*$ such that

$$E(\mathbf{X}^*, \mathbf{Y}^*) = M_I = M_{II} = G^*$$

In other words, any matrix game has a value. Observe that stable games are also covered by the minimax theorem, since a pure strategy is a special mixed strategy that has a single nonzero component (equal to 1).

SOLUTION BY LINEAR PROGRAMMING

The optimal strategies guaranteed by the minimax theorem, as well as the value of the game, can be calculated via linear programming. The optimal strategy for player II is incorporated in the solution of the following linear program:

$$\begin{aligned} \text{maximize:}\quad & z = -y_{n+1} \\ \text{subject to:}\quad & g_{11}y_1 + g_{12}y_2 + \cdots + g_{1n}y_n - y_{n+1} \le 0 \\ & g_{21}y_1 + g_{22}y_2 + \cdots + g_{2n}y_n - y_{n+1} \le 0 \\ & \cdots\cdots\cdots\cdots\cdots\cdots\cdots\cdots\cdots\cdots \\ & g_{m1}y_1 + g_{m2}y_2 + \cdots + g_{mn}y_n - y_{n+1} \le 0 \\ & \quad y_1 + \quad y_2 + \cdots + \quad y_n \qquad = 1 \\ \text{with:}\quad & y_1, y_2, \ldots, y_n \text{ nonnegative} \end{aligned} \tag{17.7}$$

Here $G^* = y^*_{n+1}$ and $\mathbf{Y}^* = [y^*_1, y^*_2, \ldots, y^*_n]^T$. By initially increasing each g_{ij} by the same positive amount (this leaves unchanged the nature of the game), we can force $g_{ij} \geq 0$. Then the expected gain to player I is also nonnegative. Since this quantity is represented by y_{n+1} in program (*17.7*), it follows that all variables can be restricted to nonnegative values under such circumstances. Equivalently, y_{n+1} can be replaced by the difference of two, new, nonnegative variables. The optimal strategy for player I is the probability vector whose components are the solution to the duel of program (*17.7*). (See Problem 17.9.)

Whenever a player has only two pure strategies, the optimal strategy for that player can be determined graphically. (See Problem 17.10.) If both players have exactly two pure strategies, then the optimal strategies are

$$x_1^* = \frac{g_{22} - g_{21}}{g_{11} + g_{22} - g_{12} - g_{21}} \qquad x_2^* = \frac{g_{11} - g_{12}}{g_{11} + g_{22} - g_{12} - g_{21}} \tag{17.8}$$

$$y_1^* = \frac{g_{22} - g_{12}}{g_{11} + g_{22} - g_{12} - g_{21}} \qquad y_2^* = \frac{g_{11} - g_{21}}{g_{11} + g_{22} - g_{12} - g_{21}} \tag{17.9}$$

with

$$G^* = \frac{g_{11}g_{22} - g_{12}g_{21}}{g_{11} + g_{22} - g_{12} - g_{21}} \tag{17.10}$$

(See Problem 17.7.)

DOMINANCE

A pure strategy P is *dominated* by a pure strategy Q if, for each pure strategy of the opponent's, the payoff associated with P is no better than the payoff associated with Q. Since a dominated pure strategy can never be part of an optimal strategy, the corresponding row or column of the game matrix may be deleted *a priori*.

Solved Problems

17.1 *Construct a payoff matrix for the following game.* Each of two supermarket chains proposes to build a store in a rural region that is served by three towns. The distances between towns are shown in Fig. 17-1. Approximately 45 percent of the region's population live near town A, 35 percent live near town B, and 20 percent live near town C. Because chain I is larger and has developed a better reputation than chain II, chain I will control a majority of the business whenever their situations are comparable. Both chains are aware of the other's interest in the

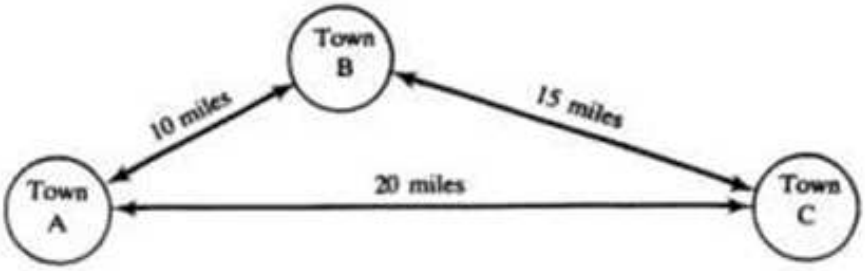

Fig. 17-1

region and both have completed marketing surveys that give identical projections. If both chains locate in the same town or equidistant from a town, chain I will control 65 percent of the business in that town. If chain I is closer to a town than chain II, chain I will control 90 percent of that town's business. If chain I is farther from a town than chain II, it will still draw 40 percent of that town's business. The remaining business under all circumstances will go to chain II. Furthermore, both chains know that it is the policy of chain I not to locate in towns that are too small, and town C falls into this category.

There are two players of this game, chain I and chain II. Player I has two pure strategies: A_1 (locate in town A) and A_2 (locate in town B); Player II has three pure strategies: B_1 (locate in town A), B_2 (locate in town B), and B_3 (locate in town C). We take the payoffs to chain I to be the percentages of business in the region that will fall to chain I, according to the marketing surveys. Since each percentage point increase or decrease presents an identical decrease or increase, respectively, for chain II, this is a two-person, zero-sum game.

If both chains locate in the same town, then player I will receive 65 percent of the business from the entire region. Thus, $g_{11} = g_{22} = 65$. If chain I locates in town A while chain II locates in town B, then player I is closer to town A than player II, but player II is closer to both towns B and C than player I. Consequently, player I will capture

$$(0.90)(0.45) + (0.40)(0.35) + (0.40)(0.20) = 0.625$$

or 62.5 percent of the region's business. Therefore, $g_{12} = 62.5$. If chain I locates in town B and chain II locates in town C, then player I is closer to towns A and B, while player II is closer to town C. Consequently, player I will have

$$(0.90)(0.45) + (0.90)(0.35) + (0.40)(0.20) = 0.80$$

or 80 percent of the region's business. Therefore, $g_{23} = 80$. Similarly, $g_{13} = 80$ and $g_{21} = 67.5$. These results are collected in Table 17-3, which is the payoff matrix for this game.

Table 17-3

		Player II		
		B_1	B_2	B_3
Player I	A_1	65	62.5	80
	A_2	67.5	65	80

17.2 *Construct a payoff matrix for the following game.* A barrel contains equal numbers of red and green marbles. Player I randomly selects one marble and inspects it for color without showing it to player II. If the marble is red, player I says, "I have a red marble," and demands \$1 from player II. If the marble is green, either player I says, "The marble is green," and pays player II \$1, or player I bluffs by saying, "The marble is red," and demands \$1 from player II. Whenever player I demands \$1, player II either can pay or can challenge player I's claim that the selected marble is red. Once challenged, player I must show the marble to player II. If it is indeed red, player II pays player I \$2; if it is not red, player I pays player II \$2.

Player I has only two pure strategies; namely,

A_1: To claim the marble's actual color.

A_2: To claim the marble red whether or not it is red.

[Note that I's pure strategies are not identical with his *moves*, which are (i) to claim red and (ii) to claim green.] Player II also has just two pure strategies; these are

B_1: To believe player I.

B_2: To believe if the claim is green and to challenge if the claim is red.

Since each person wins what the other loses, this is a two-person, zero-sum game.

In this game, the payoffs associated with the *pure* strategies are random variables; we replace them by their expected values. Thus, g_{11} is the expected gain to player I if player I claims the true color of the chosen marble and player II believes. Since half the time the marble is red and half the time it is green,

$$g_{11} = \tfrac{1}{2}(1) + \tfrac{1}{2}(-1) = 0$$

The payoff g_{12} is the expected gain to player I when player I claims the true color of the marble and player II challenges if red is claimed. Since the marble has probability 1/2 of being either color, half the time there will be no challenge, and half the time player II will challenge and lose. Therefore,

$$g_{12} = \tfrac{1}{2}(-1) + \tfrac{1}{2}(2) = \tfrac{1}{2}$$

Similarly,

$$g_{21} = 1 \qquad g_{22} = \tfrac{1}{2}(-2) + \tfrac{1}{2}(2) = 0$$

These results are collected in Table 17-4, which is the payoff matrix for the game.

Table 17-4

		Player II	
		B_1	B_2
Player I	A_1	0	1/2
	A_2	1	0

17.3 Determine whether any pure strategies in the game of Table 17-3 can be discarded through dominance.

Player I can discard A_1 (locating in town A), since the payoffs from this strategy are always less than or equal to the corresponding payoffs from A_2. Player II can discard both B_1 and B_3 as inferior to B_2 (note that the payoffs to player II are the negatives of those given in Table 17-3 for player I). With the first row and the first and third columns deleted, the payoff matrix consists of a single entry. Thus A_2 and B_2 are optimal strategies. Both supermarket chains should locate in town B. Chain I will control 65 percent of the region's business, with the remaining 35 percent going to chain II.

17.4 Let $\mathbf{G}'$ denote the game matrix obtained from matrix $\mathbf{G}$ by eliminating dominated rows and columns. Show that $\mathbf{G}$ is stable if and only if $\mathbf{G}'$ is stable.

It suffices to consider the case in which the first row of $\mathbf{G}$ is dominated by the second row. If g_{1p} and g_{2q} are the two row minima (indicated by circles below),

$$\begin{bmatrix} g_{11} & g_{12} & \cdots & g_{1p} & \cdots & g_{1q} & \cdots & g_{1n} \\ g_{21} & g_{22} & \cdots & g_{2p} & \cdots & g_{2q} & \cdots & g_{2n} \\ \cdots & \cdots & \cdots & \cdots & \cdots & \cdots & \cdots & \cdots \end{bmatrix}$$

then $g_{1p} \le g_{1q}$. Also, $g_{1q} \le g_{2q}$ (by dominance). Hence,

$$g_{1p} \le g_{2q}$$

This means that the maximum of the row minima in $\mathbf{G}$ is the same as the maximum of the row minima in $\mathbf{G}'$, i.e., $m_I = m_I'$.

Further, if row 1 contains a column maximum of $\mathbf{G}$—say, g_{1s}—it follows from dominance that $g_{2s} = g_{1s}$ is also a column maximum. Consequently, the minimum of the column maxima in $\mathbf{G}$ is the same as the minimum of the column maxima in $\mathbf{G}'$, i.e., $m_{II} = m_{II}'$. We conclude that

$$m_I = m_{II} \qquad \text{if and only if} \qquad m_I' = m_{II}'$$

17.5 Is the game of Table 17-3 stable?

Yes, by Problems 17.3 and 17.4.

17.6 Is the game of Table 17-4 stable?

Here, $m_I = 0 < 1/2 = m_{II}$; the game is unstable.

17.7 Find the optimal strategies for both players of the game of Table 17-4.

As determined in Problem 17.6, the game is unstable and hence not solvable in pure strategies. Since this game involves exactly two pure strategies for each player, the optimal (mixed) strategies are given by (*17.8*) and (*17.9*) as

$$x_1^* = \frac{0-1}{0+0-(1/2)-1} = \frac{2}{3} \qquad x_2^* = 1 - x_1^* = \frac{1}{3}$$

$$y_1^* = \frac{0-(1/2)}{0+0-(1/2)-1} = \frac{1}{3} \qquad y_2^* = 1 - y_1^* = \frac{2}{3}$$

Accordingly, player II should believe player I one-third of the time, while challenging player I the other two-thirds of the time if player I claims a red marble. Player I should claim the true color of the marble two-thirds of the time, while bluffing the other third of the time if the marble is green. The net result will be, by (*17.10*), an expected gain of

$$G^* = \frac{(0)(0)-(1/2)(1)}{0+0-(1/2)-1} = \frac{1}{3}\text{ dollar}$$

to player I each time the game is played. The expected payoff to player II is the negative of this amount.

17.8 Find optimal strategies for both players of the game defined by the payoffs given in Table 17-5.

Table 17-5

Player I \ Player II	B_1	B_2	B_3	B_4	B_5
A_1	3	−2	−4	0	6
A_2	−4	2	−1	7	−8
A_3	2	−5	−4	1	−1
A_4	0	−3	−2	−1	−1

Table 17-6

Player I \ Player II	B_1	B_2	B_3	B_5
A_1	3	−2	−4	6
A_2	−4	2	−1	−8
A_4	0	−3	−2	−1

Pure strategy B_4 is dominated by B_3 (and by B_2), so it can be eliminated. Once it is, then A_3 is dominated by A_1; hence A_3 also can be discarded. The resulting payoff matrix is Table 17-6, for which

$$m_I = -3 < -1 = m_{II}$$

As the game is not stable, the optimal strategies for both players are mixed strategies incorporated in the solution of program (*17.7*). For the payoffs in Table 17-6, this program becomes

$$\begin{aligned}
&\text{maximize:} && z = -y_6 \\
&\text{subject to:} && 3y_1 - 2y_2 - 4y_3 + 6y_5 - y_6 \le 0 \\
& && -4y_1 + 2y_2 - y_3 - 8y_5 - y_6 \le 0 \\
& && -3y_2 - 2y_3 - y_5 - y_6 \le 0 \\
& && y_1 + y_2 + y_3 + y_5 = 1 \\
&\text{with:} && y_1, y_2, y_3, \text{ and } y_5 \text{ nonnegative}
\end{aligned} \tag{I}$$

Since y_6 is unrestricted, we set $y_6 \equiv y_7 - y_8$, where both y_7 and y_8 are nonnegative variables (see Chapter 2). The initial simplex tableau is Tableau 1, with slack variables y_9, y_{10}, and y_{11}, and artificial variable y_{12}. Five iterations of the simplex algorithm yield Tableau 6. It follows that the optimal strategy for player II (with $y_4^* = 0$ because B_4 is not used) is

$$\mathbf{Y}^* = [y_1^*, y_2^*, y_3^*, y_4^*, y_5^*]^T = [0, 7/60, 7/10, 0, 11/60]^T$$

The optimal strategy for player I (with $x_3^* = 0$ because A_3 is not used) is given in terms of the dual solution (see Chapter 4) as

$$\mathbf{X}^* = [x_1^*, x_2^*, x_3^*, x_4^*]^T = [1/15, 1/5, 0, 11/15]^T$$

The value of the game is

$$G^* = y_6^* = y_7^* - y_8^* = 0 - \frac{29}{15} = -\frac{29}{15}$$

that is, player I can expect to lose 29/15 units to player II at each play, provided both players use their optimal strategies.

		y_1	y_2	y_3	y_5	y_7	y_8	y_9	y_{10}	y_{11}	y_{12}	
		0	0	0	0	−1	1	0	0	0	$-M$	
y_9	0	3	−2	−4	6	−1	1	1	0	0	0	0
y_{10}	0	−4	2	−1	−8	−1	1	0	1	0	0	0
y_{11}	0	0	−3	−2	−1	−1	1	0	0	1	0	0
y_{12}	$-M$	1	1	1	1	0	0	0	0	0	1	1
$(z_j - c_j)$:		0	0	0	0	1	−1	0	0	0	0	0
		−1	−1	−1	−1	0	0	0	0	0	0	−1

Tableau 1

	y_1	y_2	y_3	y_5	y_7	y_8	y_9	y_{10}	y_{11}	
y_5	7/12	0	0	1	0	0	1/15	−1/20	−1/60	11/60
y_2	−1/12	1	0	0	0	0	4/15	3/20	−17/20	7/60
y_8	4/3	0	0	0	−1	1	1/15	1/5	11/15	29/15
y_3	1/2	0	1	0	0	0	−1/5	−1/10	3/10	7/10
	4/3	0	0	0	0	0	1/15	1/5	11/15	29/15

Tableau 6

17.9 (*a*) Derive a linear program for the optimal strategy for player I in the matrix game defined by Table 17-1. (*b*) Show that this program is the symmetric dual of (*17.7*), the program for player II's optimal strategy.

(*a*) Let $\mathbf{X}^*$ denote the maximizing $\mathbf{X}$ in (*17.5*). Then (*17.5*) is equivalent to the following two conditions:

(i) $E(\mathbf{X}^*, \mathbf{Y}) \geq M_I$ for all probability vectors $\mathbf{Y}$.

(ii) If $x_{m+1} > M_I$, there is no probability vector $\mathbf{X}$ that satisfies

$$E(\mathbf{X}, \mathbf{Y}) \geq x_{m+1}$$

for all probability vectors $\mathbf{Y}$.

Condition (i) says that player I is guaranteed an expected return of at least M_I if he plays $\mathbf{X}^*$; condition (ii) says that no other strategy gives player I a larger minimum expected return. From (i) and (ii), it follows that the program

$$\begin{aligned} &\text{maximize:} \quad z = x_{m+1} \\ &\text{subject to:} \quad E(\mathbf{X}, \mathbf{Y}) \geq x_{m+1} \qquad (\mathbf{Y} \text{ arbitrary}) \end{aligned} \tag{1}$$

in the variables $x_1, \ldots, x_m, x_{m+1}$ has the solution $[x_1^*, \ldots, x_m^*, M_I]^T$. However,

$$E(\mathbf{X}, \mathbf{Y}) \equiv \sum_{j=1}^{n} \left(\sum_{i=1}^{m} g_{ij} x_i \right) y_j \geq x_{m+1} \qquad (y_j \geq 0, \quad \sum y_j = 1) \tag{2}$$

If and only if

$$\sum_{i=1}^{m} g_{ij} x_i \geq x_{m+1} \qquad (j = 1, 2, \ldots, n) \tag{3}$$

Indeed, relation (*2*) is just the convex combination (Chapter 2), with weights y_j, of relations (*3*). Consequently, program (*1*) may be rewritten as

$$\begin{aligned} &\text{minimize:} \quad z = -x_{m+1} \\ &\text{subject to:} \quad g_{11}x_1 + g_{21}x_2 + \cdots + g_{m1}x_m - x_{m-1} \geq 0 \\ &\qquad\qquad\quad g_{12}x_1 + g_{22}x_2 + \cdots + g_{m2}x_m - x_{m+1} \geq 0 \\ &\qquad\qquad\quad \cdots\cdots\cdots\cdots\cdots\cdots\cdots\cdots\cdots\cdots \\ &\qquad\qquad\quad g_{1n}x_1 + g_{2n}x_2 + \cdots + g_{mn}x_m - x_{m+1} \geq 0 \\ &\qquad\qquad\quad x_1 + \quad x_2 + \cdots + \quad x_m \qquad\qquad = 1 \\ &\text{with:} \quad x_1, x_2, \ldots, x_m \text{ nonnegative} \end{aligned} \tag{4}$$

where we have changed the maximization to a minimization and have included the restrictions on the probabilities x_i.

(*b*) In program (*4*) above, replace x_{m+1} by $x_{m+1} - x_{m+2}$, where the new x_{m+1} and x_{m+2} are nonnegative variables. Also, replace the equality constraint by

$$\begin{aligned} -x_1 - x_2 - \cdots - x_m &\geq -1 \\ x_1 + x_2 + \cdots + x_m &\geq \quad 1 \end{aligned}$$

Make the analogous replacements in program (*17.7*). Then program (*4*) falls into form (*4.1*) and program (*17.7*) falls into form (*4.2*), wherein

$$\mathbf{X} \equiv [x_1, x_2, \ldots, x_{m+1}, x_{m+2}]^T \qquad \mathbf{W} \equiv [y_1, y_2, \ldots, y_{n+1}, y_{n+2}]^T$$

$$\mathbf{A} \equiv \begin{bmatrix} g_{11} & g_{21} & \cdots & g_{m1} & -1 & +1 \\ g_{12} & g_{22} & \cdots & g_{m2} & -1 & +1 \\ \cdots & \cdots & \cdots & \cdots & \cdots & \cdots \\ g_{1n} & g_{2n} & \cdots & g_{mn} & -1 & +1 \\ -1 & -1 & \cdots & -1 & 0 & 0 \\ +1 & +1 & \cdots & +1 & 0 & 0 \end{bmatrix} \qquad \mathbf{B} \equiv \begin{bmatrix} 0 \\ 0 \\ \cdots \\ 0 \\ -1 \\ +1 \end{bmatrix} \qquad \mathbf{C} \equiv \begin{bmatrix} 0 \\ 0 \\ \vdots \\ 0 \\ -1 \\ +1 \end{bmatrix}$$

17.10 Use a graphical method to determine an optimal strategy for player I in the game defined by Table 17-7.

Table 17-7

		Player II		
		B_1	B_2	B_3
Player I	A_1	2	−3	−4
	A_2	−6	−1	1

For this game, program (*4*) of Problem 17.9(*a*) becomes

$$\begin{aligned} \text{minimize:}\quad & z = -x_3 \\ \text{subject to:}\quad & 2x_1 - 6x_2 - x_3 \geq 0 \\ & -3x_1 - x_2 - x_3 \geq 0 \\ & -4x_1 + x_2 - x_3 \geq 0 \\ & x_1 + x_2 = 1 \\ \text{with:}\quad & x_1 \text{ and } x_2 \text{ nonnegative} \end{aligned} \tag{1}$$

Before this program can be solved graphically, it must be reduced to a system involving just two variables.

The equality constraint can be rewritten as

$$x_2 = 1 - x_1 \tag{2}$$

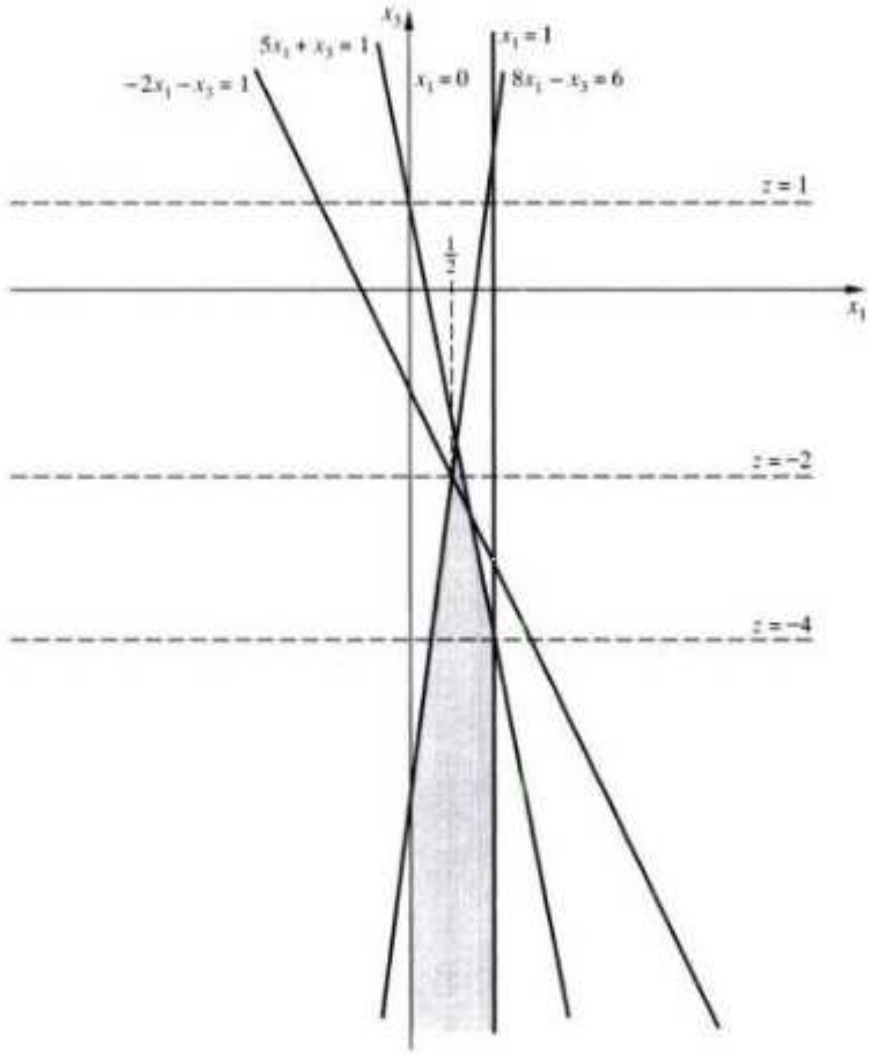

Fig. 17-2

Then the nonnegativity of x_2 is guaranteed by requiring

$$x_1 \le 1 \tag{3}$$

Substituting (2) into the constraints of system (1), replacing the nonnegativity condition on x_2 by the new constraint (3), and going over to a maximization program, we obtain:

$$\begin{aligned} \text{maximize:} \quad & z = x_3 \\ \text{subject to:} \quad & 8x_1 - x_3 \ge 6 \\ & -2x_1 - x_3 \ge 1 \\ & 5x_1 + x_3 \le 1 \\ & x_1 \le 1 \\ \text{with:} \quad & x_1 \ge 0 \end{aligned} \tag{4}$$

The graphical solution to program (4) is shown in Fig. 17-2.

$$x_1^* = 1/2 \qquad x_2^* = 1 - x_1^* = 1/2$$

The value of the game is $z^* = x_3^* = -2$.

Supplementary Problems

17.11 Determine whether each matrix game, as defined below by the payoffs to the row player, is stable. Then find both optimal strategies and the value of the game.

	B_1	B_2	B_3	B_4
A_1	1	−1	−2	−1
A_2	0	−2	8	6

(a)

	B_1	B_2	B_3	B_4
A_1	1	−1	1	0
A_2	−1	1	0	1

(b)

	B_1	B_2	B_3	B_4
A_1	−2	−1	−2	8
A_2	1	0	−1	−1
A_3	−3	1	−3	1

(c)

	B_1	B_2	B_3
A_1	1	0	−6
A_2	−1	−1	2
A_3	−2	0	0

(d)

	B_1	B_2	B_3
A_1	2	6	1
A_2	8	4	6
A_3	1	2	1

(e)

	B_1	B_2
A_1	−1	−2
A_2	0	2
A_3	−1	−5
A_4	−2	1

(f)

17.12 Solve Problem 17.1 if chain I controls 70 percent of a town's business whenever both chains locate in the same town or are equidistant from a town.

17.13 Solve Problem 17.1 if the region is served by four towns situated along a straight highway as shown in Fig. 17-3. Approximately 15 percent of the population live near town A, 30 percent near town B, 20 percent near town C, and 35 percent near town D; each town is large enough for both chains to consider locating in it.

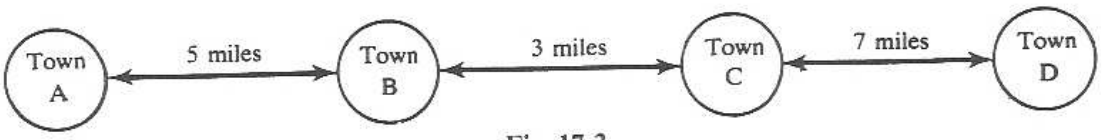

Fig. 17-3

17.14 Devise a method for implementing strategy $\mathbf{X}^*$ of Problem 17.8.

17.15 Army A wishes to truck supplies to a border outpost which is expecting an attack by army B within hours. The nearest supply depot is connected to the outpost by two separate roads, one running through forests and the other over flatlands. A supply convoy moves faster over the flatlands route but enjoys better camouflage on the forest route. The convoy must take one route or the other.

Army B anticipates a supply effort along one of the routes, and plans to hinder it with air strikes. It has available a single squadron of airplanes, which cannot be divided. If army B sends its airplanes above the forest route and finds army A there, army B will have time for four strikes against the convoy. If army B sends its planes above the flatlands route and army A is using that route, army B will have time for three strikes. If army B sends its planes over the wrong route, valuable time is lost. Once it realizes its error and locates the convoy on the other route, army B will have time for two strikes on the flatlands route, but time for only one strike on the forest route (because of the added difficulty in finding the convoy through the trees). Determine the optimal strategies of the two armies.

17.16 A Blue Army and a Red Army are contesting two airfields, valued at 20 and 8 million dollars, which are both under the control of the Red Army. The Blue Army is charged with attacking either or both airfields and inflicting maximum damage (measured in dollars) to the facilities. It is the task of the Red Army to minimize this damage. To achieve their respective objectives, each army can assign its full force to one of the two airfields or it can divide its force in half and cover both airfields with reduced capacity.

A facility will experience 25 percent damage if it is attacked and defended at full force, but only 10 percent damage if it is attacked and defended at half force. If a facility is attacked at full force but defended at half force, it will experience 50 percent damage. Any facility attacked either at half force or full force but not defended will experience complete destruction. A facility that is not attacked, or one that is attacked at half force but defended at full force, will experience no damage. Determine optimal strategies for both armies.

17.17 Two ranchers have brought a dispute over a 6-yard-wide strip of land that separates their properties to a referee. Both claim the strip as entirely their own. Both ranchers are aware that the referee will ask each party to submit a confidential proposal for settling the dispute fairly and will then accept that proposal which gives the most. If both proposals give equally or not at all, the referee will split the difference, setting the boundary in the middle of the 6-yard width. Determine the ranchers's best proposals, if proposals are restricted to integral amounts.

17.18 Cigarette bootleggers use two routes for moving cigarettes out of North Carolina, Interstate 95 or back roads. Both routes are known to the police, but because of personnel limitations they can patrol only one of these routes sufficiently at any one time—a fact well known to the bootleggers.

Police estimate that the average load of contraband traveling on Interstate 95 is worth \$1000 to the bootlegger if it reaches New York. The back roads limit the size of vehicles somewhat, so the average load of contraband traveling this route is worth only \$800 if it reaches its destination. Any contraband discovered by the police is confiscated and the bootlegger is fined. For cigarettes traveling I-95, the loss to the bootlegger averages \$700; the loss on cargo traveling the back roads averages \$600. Furthermore, the police estimate that they intercept only 40 percent of the contraband traffic traveling I-95 when they are patrolling

the highway, and 25 percent of the traffic traveling the back roads when they patrol there. Determine an optimal patrol strategy for the police if its objective is to minimize the bootleggers' gains.

17.19 With one day left before elections, both candiates for Governor have targeted the same three cities as crucial and potentially worth a last visit. Since no visit is useful unless sufficient advance work has been completed by the candidate's staff, plans must be made by each candidate prior to knowing the opposition's choice. Polls commissioned by both sides show identical projections. Table 17-8 gives the estimated gain (in thousands of votes) for candidate I resulting from each combination of last-day visits. Which city should each candidate choose to visit?

Table 17-8

		Candidate II		
		To City 1	To City 2	To City 3
Candidate I	To City 1	12	−9	14
	To City 2	−8	7	12
	To City 3	11	−10	10

17.20 A game is *fair* if $G^* = 0$. A game is *symmetric* if both players have the same number of pure strategies and if, for all i and j, the gain to player I from his ith pure strategy and II's jth pure strategy is equal to the gain to player II from *his* ith pure strategy and *I*'s jth pure strategy. Prove that any symmetric game is fair.

17.21 In a well-known gambling game, player I holds a red ace and a black deuce, while player II holds a red deuce and a black three. Simultaneously, both players show one card of their choice. If the two cards match in color, player I wins; otherwise player II wins. The payoffs are determined by the following formula: If player I shows the ace, the players exchange the difference (in dollars) of the amounts shown on the two cards (ace counts as one); if player I shows the deuce, the players exchange the sum (in dollars) of the amounts shown on the two cards. Player I, noting that he can win either \$1 or \$5 or lose either \$2 or \$4, reasons that the game is fair. Is it?

Chapter 18

Decision Theory

DECISION PROCESSES

A *decision process* is a process requiring either a single or sequential set of decisions for its completion. Each allowable decision has a gain or loss associated with it which is codetermined by *external* circumstances surrounding the process, a feature which distinguishes these processes from the processes treated in Chapter 19. The set of possible circumstances, known as the *states of nature*, and a probability distribution governing the occurrence of each state are presumed known. Both the set of allowable decisions and the set of states of nature will be assumed finite (an assumption not made in the more elaborate theory).

We denote the allowable decisions by $D_1, D_2, \ldots, D_m$; the states of nature by $S_1, S_2, \ldots, S_n$; and the return associated with decision D_i and state S_j by g_{ij} $(i = 1, 2, \ldots, m; j = 1, 2, \ldots, n)$. A process requiring the implementation of just one decision is defined completely by Table 18-1. This payoff table is known as a *gain matrix* whenever the entries g_{ij} are in terms of gains to the decision maker. Losses are then represented as negative gains.

Table 18-1

Decisions	States of Nature: S_1	S_2	$\cdots$	S_n
D_1	g_{11}	g_{12}	$\cdots$	g_{1n}
D_2	g_{21}	g_{22}	$\cdots$	g_{2n}
$\cdots$	$\cdots$	$\cdots$	$\cdots$	$\cdots$
D_m	g_{m1}	g_{m2}	$\cdots$	g_{mn}

Table 18-2

Decisions	States of Nature: S_1	S_2
D_1	60	660
D_2	-100	2000

Example 18.1 A major energy company offers a landowner \$60 000 for the exploration rights to natural gas on a certain site and the option for future development. The option, if exercised, is worth an additional \$600 000 to the landowner, but this will occur only if natural gas is discovered during the exploration phase. The landowner, believing that the energy company's interest is a good indication that gas is present, is tempted to develop the field herself. To do so, she must contract with local outfits with expertise in exploration and development. The initial cost is \$100 000, which is lost if no gas is found. If gas is discovered, however, the landowner estimates a net profit of 2 million dollars.

The decisions for the landowner are D_1 (to accept the energy company's offer) and D_2 (to explore and develop on her own). The states of nature are S_1 (there is no gas on the land) and S_2 (there is gas on the land). The gains (in thousands of dollars) to the landowner for each combination of events are given in Table 18-2.

It remains to specify or estimate the probabilities attached to the two states of nature, $P(S_1)$ and $P(S_2)$.

Although Table 18-1 is identical in form to Table 17-1, there are significant differences between decision processes and matrix games. In a decision process, only the decision maker is capable of making rational decisions; nature is not. The actual state of nature in existence at any given time is a random event, but the underlying probability distribution cannot be considered a "mixed strategy," designed to inflict losses on the decision maker. Furthermore, we generally rule out any randomness in the decision

maker's choice; he or she is restricted to one or another "pure strategy" $D_1, \ldots, D_m$. Because of these differences, optimal game strategies tend, for decision processes, to be too conservative.

NAIVE DECISION CRITERIA

The *minimax* (or *pessimistic*) *criterion* is to select the decision that minimizes the maximum possible loss to the decision maker. In terms of a gain matrix, it is the decision that maximizes the minimum possible gain. The *optimistic criterion* is to choose the decision that maximizes the possible gain. The *middle-of-the road criterion* is to select that decision for which the average of the maximum and minimum gains is greatest. (See Problems 18.1 and 18.2.) As none of these three criteria is based on the *probable* state of nature, they are considered inferior to other criteria that are so based. Two probabilistic criteria will now be given.

A PRIORI CRITERION

The *a priori* (or *Bayes'*) *criterion* is to select the decision that maximizes the expected gain. (See Problems 18.3 and 18.4.)

A POSTERIORI CRITERION

If an imperfect experiment can be conducted that provides information on the true state of nature, then data from this experiment may be combined with the initial probabilities of the various states to yield an updated probability distribution. Designate the outcome of the experiment by θ and assume that the reliability of the experiment is given by the conditional probabilities $P(\theta|S_1)$, $P(\theta|S_2), \ldots, P(\theta|S_n)$. The updated (or *a posteriori*) probabilities of the states—$P(S_1|\theta), P(S_2|\theta), \ldots, P(S_n|\theta)$—are determined from Bayes' theorem (Problem 18.5). The *a posteriori* criterion is to select the decision that maximizes the expected gain with respect to the updated probability distribution. (See Problems 18.6 and 18.7.)

DECISION TREES

A *decision tree* is an oriented tree (see Chapter 13) that represents a decision process. The nodes designate points in time where (i) one or another decision must be made by the decision maker, or (ii) the decision maker is faced with one or another state of nature, or (iii) the process terminates. Directed out of a node (i) is a branch for each possible decision; directed out of a node (ii) is a branch for each possible state of nature. Under each branch the probability of the corresponding event is written, when defined. (See Problems 18.3 and 18.6.)

Decision trees are useful in determining optimal decisions for complicated processes. The technique is to begin with the terminal nodes and sequentially to move backwards through the network, calculating the expected gains at the intermediate nodes. Each gain is written above its corresponding node. A recommended decision is one that leads to a maximum expected gain. Decisions that turn out to be nonrecommended have their corresponding branches crossed out. (See Problems 18.8 and 18.9.)

UTILITY

The *utility* of a payoff is its numerical value to a decision maker. Since no decision criterion is applicable unless all payoffs are quantified in identical units, the first step in analyzing any decision process is to determine the utility of all nonnumeric payoffs. (See Problem 18.12.)

A common utility is monetary worth, whereby each payoff (e.g., a new house) is replaced in the gain matrix by its dollar value. Monetary worth, however, is not always appropriate. A payoff of 2 million dollars is twice that of 1 million dollars, yet the former may not be worth twice the latter to a decision maker. The first million may be more valuable than the second million. In cases where dollars do not reflect the true worth of one payoff relative to another payoff, or where dollars are not a convenient quantification unit, other utilities must be used.

LOTTERIES

A *lottery* $\mathscr{L}(A, B; p)$ is a random event having two outcomes, A and B, occurring with probabilities p and $1 - p$, respectively.

VON NEUMANN UTILITIES

The following four-step procedure is used to determine *von Neumann utilities* for a finite number of payoffs.

STEP 1: List the payoffs in decreasing order of desirability: $e_1, e_2, \ldots, e_p$. Here, e_i is at least as desirable as e_j if $i < j$.

STEP 2: Arbitrarily assign finite numerical values $u(e_1)$ and $u(e_p)$ to payoffs e_1 and e_p, respectively, such that $u(e_1) > u(e_p)$.

STEP 3: For each payoff e_j ranked between e_1 and e_p in desirability, determine an *equivalence probability* p_j having the property that the decision maker is indifferent between obtaining e_j with certainty and participating in the lottery $\mathscr{L}(e_1, e_p; p_j)$.

STEP 4: Let $u(e_j) \equiv p_j u(e_1) + (1 - p_j)u(e_p)$ be the utility of payoff e_j.

Step 3 is highly subjective. The value of p_j for each payoff e_j ($j = 2, 3, \ldots, p - 1$) is an individual determination that may change drastically from one person to another or even for the same person at two different times. The resulting utilities, therefore, quantify the relative worths of payoffs to a particular decision maker at a particular moment. However, for a rational individual, it may always be expected that the *order* of the p's, and therefore of the u's, will be the same as the order of the e's. (See Problems 18.10 and 18.12.)

A utility is *normalized* if $u(e_1) = 1$ and $u(e_p) = 0$, making the utilities identical to the equivalence probabilities.

Solved Problems

18.1 Determine recommended decisions under each naive criterion for the process described in Example 18.1.

The gain matrix for this process is Table 18-2. The minimum gain for decision D_1 is 60, while that for D_2 is -100. Since $\max\{60, -100\} = 60$ is the gain associated with D_1, D_1 is the recommended decision under the minimax criterion.

The largest entry in the matrix is 2000, the gain associated with D_2. Therefore D_2 is the recommended decision under the optimistic criterion.

The averages of the maximum and minimum gains for D_1 and D_2 are, respectively,

$$\frac{660 + 60}{2} = 360 \qquad \text{and} \qquad \frac{2000 + (-100)}{2} = 950$$

Since max $\{360, 950\} = 950$ is associated with D_2, D_2 is the recommended decision under the middle-of-the-road criterion.

18.2 *Determine recommended decisions under each naive criterion for the following decision process.* A dress buyer for a large department store must place orders with a dress manufacturer 9 months before the dresses are needed. One decision is as to the number of knee-length dresses to stock. The ultimate gain to the department store depends both on this decision and on the fashion prevailing 9 months later. The buyer's estimates of the gains (in thousands of dollars) are given in Table 18-3.

Table 18-3

	S_1: Knee lengths are high fashion	S_2: Knee lengths are acceptable	S_3: Knee lengths are not acceptable
D_1: Order none	−50	0	80
D_2: Order a little	−10	30	35
D_3: Order moderately	60	45	−30
D_4: Order a lot	80	40	−45

The minimum gains for decisions D_1 through D_4 are, respectively, -50, -10, -30, and -45. Since the maximum of these four amounts is -10, a gain associated with D_2, D_2 is the recommended decision under the minimax criterion.

The maximum gain is 80, associated with both D_1 and D_4. Hence, either D_1 or D_4 is the recommended decision under the optimistic criterion.

The averages of the maximum and minimum gains for D_1 through D_4, respectively, are 15, 12.5, 15, and 17.5. Since the maximum of these averages is associated with D_4, D_4 is the recommended decision under the middle-of-the-road criterion.

18.3 Determine the recommended decision under the *a priori* criterion for the process of Example 18.1, if the landowner estimates the probability of finding gas as 0.6.

With $P(S_2) = 0.6$, it follows that $P(S_1) = 1 - 0.6 = 0.4$. Using the data in Table 18-2, we calculate the expected gain from D_1 as

$$E(G_1) = (60)(0.4) + (660)(0.6) = 420$$

and the expected gain from D_2 as

$$E(G_2) = (-100)(0.4) + (2000)(0.6) = 1160$$

Since the maximum of these two amounts, 1160, is associated with D_2, D_2 is the recommended decision under the *a priori* criterion.

This decision process is represented by the decision tree in Fig. 18-1. The expected gain of the process, 1160 at node B, is carried back from node D.

18.4 Determine the recommended decision under the *a priori* criterion for the decision process described in Problem 18.2, if the buyer estimates $P(S_1) = 0.25$, $P(S_2) = 0.40$, and $P(S_3) = 0.35$.

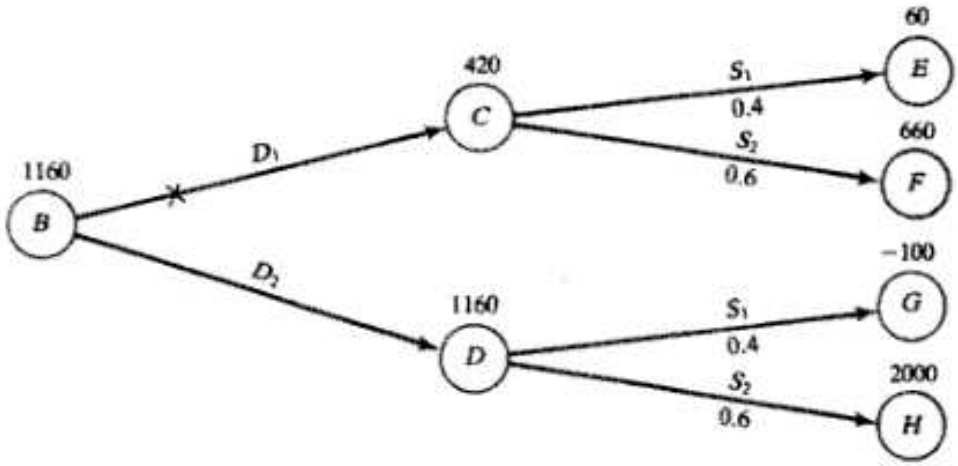

Fig. 18-1

Using the data from Table 18-3, we calculate the expected gains for decisions D_1 through D_4, respectively, as

$$E(G_1) = (-50)(0.25) + (0)(0.40) + (80)(0.35) = 15.5$$
$$E(G_2) = (-10)(0.25) + (30)(0.40) + (35)(0.35) = 21.75$$
$$E(G_3) = (60)(0.25) + (45)(0.40) + (-30)(0.35) = 22.5$$
$$E(G_4) = (80)(0.25) + (40)(0.40) + (-45)(0.35) = 20.25$$

Since the maximum of these expected gains, 22.5, is associated with D_3, D_3 is the recommended decision under the *a priori* criterion.

The process is represented by the decision tree in Fig. 18-2.

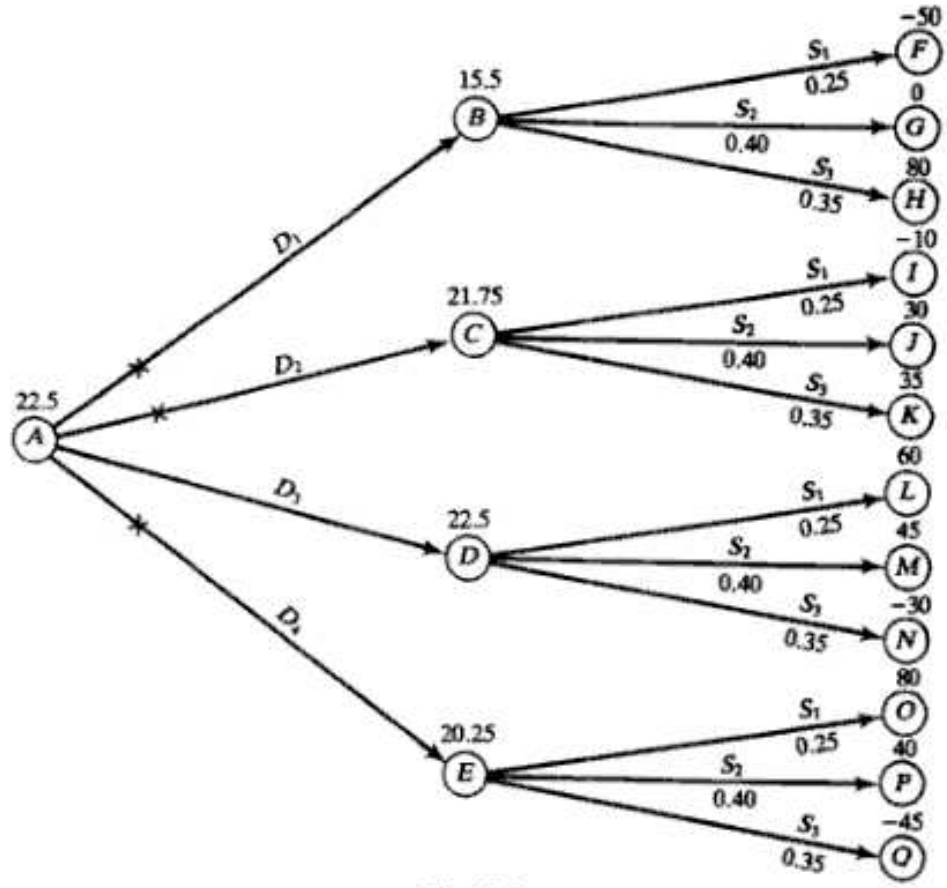

Fig. 18-2

18.5 State and prove Bayes' theorem.

Consider a sample space $\mathscr{S}$ consisting of all possible outcomes of a conceptual experiment (e.g., predicting the state of nature at a particular time). If A and B are two events (subsets) of $\mathscr{S}$, then the conditional probability of A given that B has occurred and the conditional probability of B given that A has occurred are defined by

$$P(A \cap B) = P(B)P(A|B) = P(A)P(B|A) \tag{1}$$

where $A \cap B$ is the intersection of A and B. Solving (1), we obtain

$$P(B|A) = \frac{P(A|B)P(B)}{P(A)} \tag{2}$$

in which it is assumed that $P(A) > 0$. Equation (2) is the simple form of Bayes' theorem.

The more usual form is obtained by introducing a set of mutually exclusive events, $\{H_1, H_2, \ldots, H_s\}$, whose union is $\mathscr{S}$. Then

$$\begin{aligned} P(A) &= P(A \cap H_1) + P(A \cap H_2) + \cdots + P(A \cap H_s) \\ &= P(A|H_1)P(H_1) + P(A|H_2)P(H_2) + \cdots + P(A|H_s)P(H_s) \end{aligned} \tag{3}$$

Substituting (3) into (2) and choosing $B = H_i$, we have

$$P(H_i|A) = \frac{P(A|H_i)P(H_i)}{\sum_{j=1}^{s} P(A|H_j)P(H_j)} \tag{4}$$

Loosely speaking, Bayes' theorem, (4), evaluates the probability of the "cause" H_i given the "effect" A.

18.6 The landowner in Example 18.1 has soundings taken on the site where natural gas is suspected, at a cost of \$30 000. The soundings indicate that gas is not present, but the test is not a perfect one. The company conducting the soundings concedes that 30 percent of the time the test will indicate no gas when gas in fact exists. When gas does not exist, the test is accurate 90 percent of the time. Using these data, update the landowner's initial estimate that the probability of finding gas is 0.6 and then determine the recommended decision under the *a posteriori* criterion.

Initially, $P(S_2) = 0.6$, $P(S_1) = 0.4$. Let θ_1 designate the event that soundings indicate no gas. Then the reliability of the test is given by the conditional probabilities $P(\theta_1|S_1) = 0.90$ and $P(\theta_1|S_2) = 0.30$. Bayes' theorem, (4) of Problem 18.4, gives the updated probabilities as

$$P(S_1|\theta_1) = \frac{P(\theta_1|S_1)P(S_1)}{P(\theta_1|S_1)P(S_1) + P(\theta_1|S_2)P(S_2)} = \frac{(0.90)(0.4)}{(0.90)(0.4) + (0.30)(0.6)} = \frac{2}{3}$$

$$P(S_2|\theta_1) = 1 - P(S_1|\theta_1) = \frac{1}{3}$$

The *a posteriori* gain matrix is obtained from Table 18-2 by subtracting 30 (thousand dollars) from each entry, thereby reflecting the cost of the test. The expected gains (in thousands of dollars) for decisions D_1 and D_2, respectively, in terms of the updated probabilities are

$$E(G_1|\theta_1) = (60 - 30)(\tfrac{2}{3}) + (660 - 30)(\tfrac{1}{3}) = 230$$

$$E(G_2|\theta_1) = (-100 - 30)(\tfrac{2}{3}) + (2000 - 30)(\tfrac{1}{3}) = 570$$

Since the maximum expected gain is associated with D_2, D_2 is the recommended decision under the *a posteriori* criterion.

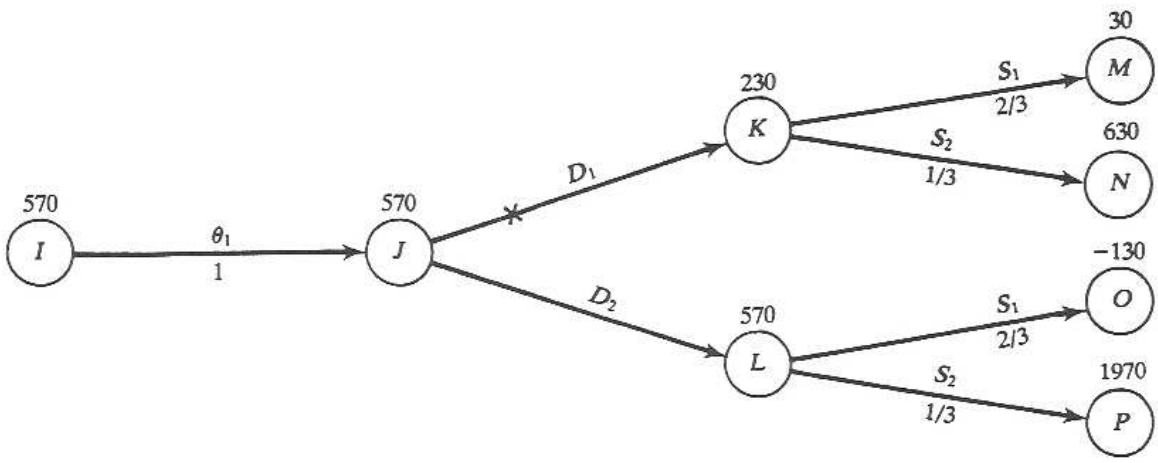

Fig. 18-3

Figure 18-3 is the decision tree for this process. The probability that the soundings indicate no gas, $P(\theta_1)$, is unity, since the result of the experiment is known.

18.7 Solve Problem 18.6 if the soundings had indicated that gas was present.

Designate the event that soundings indicate gas by θ_2. From the data of Problem 18.6,

$$P(\theta_2|S_1) = 0.10 \qquad P(\theta_2|S_2) = 0.70$$

The initial probabilities are $P(S_1) = 0.4$, $P(S_2) = 0.6$; therefore, the updated probability distribution is

$$P(S_1|\theta_2) = \frac{P(\theta_2|S_1)P(S_1)}{P(\theta_2|S_1)P(S_1) + P(\theta_2|S_2)P(S_2)} = \frac{(0.10)(0.4)}{(0.10)(0.4) + (0.70)(0.6)} = 0.087$$

$$P(S_2|\theta_2) = 1 - P(S_1|\theta_2) = 0.913$$

Again each entry in the original gain matrix, Table 18-2, must be reduced by 30 (thousand dollars) to reflect the cost of the test. Then the expected gains (in thousands of dollars) for decisions D_1 and D_2 with respect to the latest probability distribution are

$$E(G_1|\theta_2) = (60 - 30)(0.087) + (660 - 30)(0.913) = 577.8$$

$$E(G_2|\theta_2) = (-100 - 30)(0.087) + (2000 - 30)(0.913) = 1787.3$$

Since the maximum expected gain is associated with D_2, D_2 is the recommended decision under the *a posteriori* criterion.

Figure 18-4 is the decision tree for this process. The probability that the soundings indicate gas is present, $P(\theta_2)$, is unity, since the result of the experiment is known.

18.8 What is the recommended decision if the soundings discussed in Problems 18.6 and 18.7 have not been taken but are only being considered.

This is now a two-stage decision process. First the landowner must decide whether to conduct soundings, and then she must decide whether to accept the energy company's offer. Write

$D_I \equiv$ the decision to conduct soundings
$D_{II} \equiv$ the decision not to conduct soundings
$\theta_1 \equiv$ the event that soundings indicate no gas
$\theta_2 \equiv$ the event that soundings indicate gas

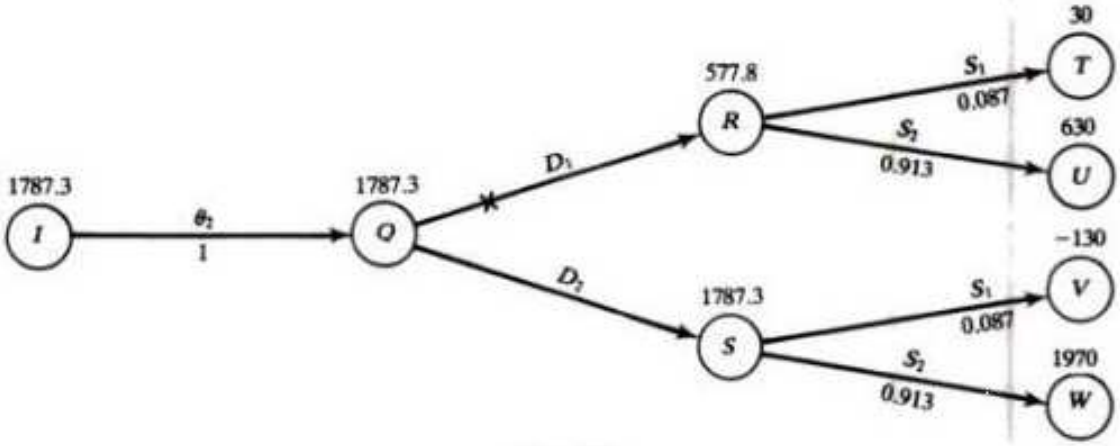

Fig. 18-4

The decision tree for the process is Fig. 18-5, which is essentially a composite of Figs. 18-1, 18-3, and 18-4. The main differences are in $P(\theta_1)$ and $P(\theta_2)$. These probabilities are no longer 1, as they were in Figs. 18-3 and 18-4, because the result of the soundings is unknown. The states S_1 and S_2 are, however, a disjoint, exhaustive set of outcomes; hence, from (3) of Problem 18.5 and the data provided in Problems 18.6 and 18.7,

$$P(\theta_1) = P(\theta_1|S_1)P(S_1) + P(\theta_1|S_2)P(S_2) = (0.90)(0.4) + (0.30)(0.6) = 0.54$$

$$P(\theta_2) = P(\theta_2|S_1)P(S_1) + P(\theta_2|S_2)P(S_2) = (0.10)(0.4) + (0.70)(0.6) = 0.46$$

With these probabilities, the expected gain at node I is

$$(570)(0.54) + (1787.3)(0.46) = 1130$$

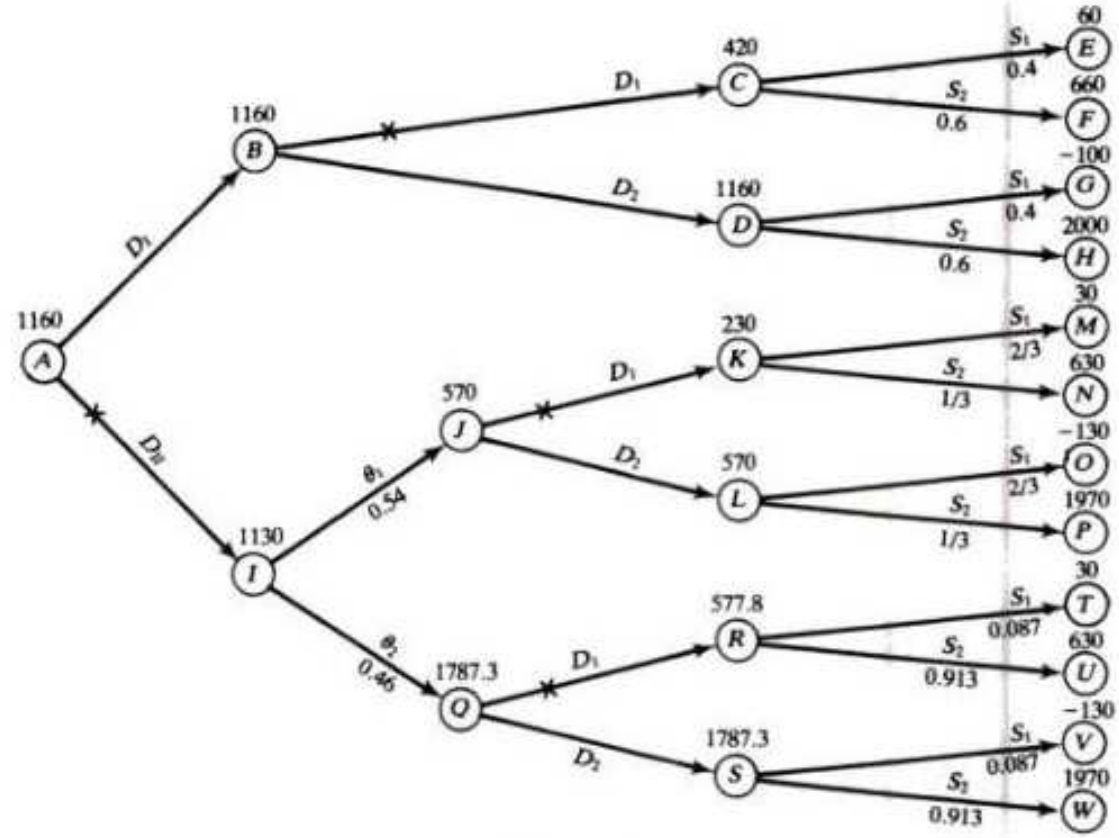

Fig. 18-5

Copyrighted

Since node B has a larger expected gain than node I, D_I is recommended over D_{II}. The recommended decisions, therefore, are not to conduct soundings and not to accept the offer of the energy company. Instead the landowner should begin exploring the land on her own immediately.

Observe that the recommended decision is D_2 regardless of whether soundings are taken and regardless of the outcome of the soundings if they are conducted. Thus, the soundings have no effect on the final decision and represent only an expense. This is reflected in the fact that the difference between the expected gains at nodes B and I in Fig. 18-5 is precisely the cost of the test.

18.9 A city is considering replacing its fleet of municipally owned, gasoline-powered automobiles by electric cars. The manufacturer of the electric cars claims that the city will experience significant savings over the life of the fleet if it converts, but the city has its doubts. If the manufacturer is correct, the city will save 1 million dollars. If the new technology is faulty, as some critics suggest, the conversion will cost the city \$450 000. A third possibility is that neither situation will occur and the city will break even with the conversion. According to a recently completed consultant's report, the respective probabilities of these three events are 0.25, 0.45, and 0.30.

The city has before it a pilot program that if implemented would indicate the potential cost or savings in a conversion to electric cars. The program involves renting three electric cars for 3 months and running them under normal conditions. The cost to the city of this pilot program would be \$50 000. The city's consultant believes that the results of the pilot program would be significant but not conclusive; she submits Table 18-4, a compilation of probabilities based on the experience of other cities, to support her contention. What actions should the city take if it wants to maximize expected savings?

Table 18-4

		A pilot program will indicate		
		Savings	No Change	A Loss
Given that a conversion	Saves Money	0.6	0.3	0.1
	Breaks Even	0.4	0.4	0.2
	Loses Money	0.1	0.5	0.4

This is a two-stage process. First the city must decide whether to conduct the pilot program, and then it must decide whether to convert its fleet to electric cars. Set

$D_I \equiv$ the decision not to conduct the pilot program
$D_{II} \equiv$ the decision to conduct the pilot program
$\theta_1 \equiv$ the event that the pilot program indicates a savings
$\theta_2 \equiv$ the event that the pilot program indicates neither a savings nor a loss
$\theta_3 \equiv$ the event that the pilot program indicates a loss
$D_1 \equiv$ the decision to convert to electric cars
$D_2 \equiv$ the decision not to convert to electric cars
$S_1 \equiv$ the state that electric cars are cheaper to run than gasoline models
$S_2 \equiv$ the state that electric cars cost the same to run as gasoline models
$S_3 \equiv$ the state that electric cars are more expensive to run than gasoline models

The gain matrix (in thousands of dollars) is

	S_1	S_2	S_3
D_1	1000	0	−450
D_2	0	0	0

The initial probability distribution for the states has $P(S_1) = 0.25$, $P(S_2) = 0.30$, and $P(S_3) = 0.45$.

If the pilot program is not conducted, the initial probability distribution is not updated, and the expected gains for D_1 and D_2 are, respectively,

$$E(G_1) = (1000)(0.25) + (0)(0.30) + (-450)(0.45) = 47.5$$

$$E(G_2) = (0)(0.25) + (0)(0.30) + (0)(0.45) = 0$$

Since the maximum expected gain is associated with D_1, D_1 is the recommended decision under the *a priori* criterion.

If the pilot program is conducted, all entries in the gain matrix must be reduced by 50 to reflect the cost of the test. It follows from Table 18-4 that

$$\begin{array}{lll} P(\theta_1|S_1) = 0.6 & P(\theta_1|S_2) = 0.4 & P(\theta_1|S_3) = 0.1 \\ P(\theta_2|S_1) = 0.3 & P(\theta_2|S_2) = 0.4 & P(\theta_2|S_3) = 0.5 \\ P(\theta_3|S_1) = 0.1 & P(\theta_3|S_2) = 0.2 & P(\theta_3|S_3) = 0.4 \end{array}$$

Using Bayes' theorem, (*4*) of Problem 18.5, we obtain

$$P(S_1|\theta_1) = \frac{(0.6)(0.25)}{(0.6)(0.25) + (0.4)(0.30) + (0.1)(0.45)} = 0.4762 \qquad (1)$$

$$P(S_2|\theta_1) = \frac{(0.4)(0.30)}{(0.6)(0.25) + (0.4)(0.30) + (0.1)(0.45)} = 0.3810 \qquad (2)$$

$$P(S_3|\theta_1) = \frac{(0.1)(0.45)}{(0.6)(0.25) + (0.4)(0.30) + (0.1)(0.45)} = 0.1429 \qquad (3)$$

$$P(S_1|\theta_2) = \frac{(0.3)(0.25)}{(0.3)(0.25) + (0.4)(0.30) + (0.5)(0.45)} = 0.1786 \qquad (4)$$

$$P(S_2|\theta_2) = \frac{(0.4)(0.30)}{(0.3)(0.25) + (0.4)(0.30) + (0.5)(0.45)} = 0.2857 \qquad (5)$$

$$P(S_3|\theta_2) = \frac{(0.5)(0.45)}{(0.3)(0.25) + (0.4)(0.30) + (0.5)(0.45)} = 0.5357 \qquad (6)$$

$$P(S_1|\theta_3) = \frac{(0.1)(0.25)}{(0.1)(0.25) + (0.2)(0.30) + (0.4)(0.45)} = 0.0943 \qquad (7)$$

$$P(S_2|\theta_3) = \frac{(0.2)(0.30)}{(0.1)(0.25) + (0.2)(0.30) + (0.4)(0.45)} = 0.2264 \qquad (8)$$

$$P(S_3|\theta_3) = \frac{(0.4)(0.45)}{(0.1)(0.25) + (0.2)(0.30) + (0.4)(0.45)} = 0.6792 \qquad (9)$$

To within roundoff errors, each set of three probabilities sums to 1.

If the result of the pilot program is θ_1, the updated probabilities are given by (*1*) through (*3*), and the expected gains for decisions D_1 and D_2 are, respectively,

$$E(G_1|\theta_1) = (950)(0.4762) + (-50)(0.3810) + (-500)(0.1429) = 361.9 \qquad E(G_2|\theta_1) = -50$$

The recommended decision under the *a posteriori* criterion is D_1.

If the result of the pilot program is θ_2, the updated probabilities are given by (*4*) through (*6*), and the expected gains for decisions D_1 and D_2 are, respectively,

$$E(G_1|\theta_2) = (950)(0.1786) + (-50)(0.2857) + (-500)(0.5357) = -112.5 \qquad E(G_2|\theta_2) = -50$$

The recommended decision under the *a posteriori* criterion is D_2.

If the result of the pilot program is θ_3, the updated probabilities are given by (7) through (9), and the expected gains for D_1 and D_2 are, respectively,

$$E(G_1|\theta_3) = (950)(0.0943) + (-50)(0.2264) + (-500)(0.6792) = -261.3 \qquad E(G_2|\theta_3) = -50$$

The recommended decision under the *a posteriori* criterion is D_2.

The decision tree for this process is Fig. 18-6, wherein the results obtained so far appear on the unlettered nodes and the branches leading to and from those nodes. The expected gains at nodes B, E, F, and G are the gains associated with the succeeding nodes if the recommended decisions are taken.

It follows from (3) of Problem 18.5 that

$$\begin{aligned} P(\theta_1) &= P(\theta_1|S_1)P(S_1) + P(\theta_1|S_2)P(S_2) + P(\theta_1|S_3)P(S_3) \\ &= (0.6)(0.25) + (0.4)(0.30) + (0.1)(0.45) = 0.315 \end{aligned}$$

$$\begin{aligned} P(\theta_2) &= P(\theta_2|S_1)P(S_1) + P(\theta_2|S_2)P(S_2) + P(\theta_2|S_3)P(S_3) \\ &= (0.3)(0.25) + (0.4)(0.30) + (0.5)(0.45) = 0.420 \end{aligned}$$

$$\begin{aligned} P(\theta_3) &= P(\theta_3|S_1)P(S_1) + P(\theta_3|S_2)P(S_2) + P(\theta_3|S_3)P(S_3) \\ &= (0.1)(0.25) + (0.2)(0.30) + (0.4)(0.45) = 0.265 \end{aligned}$$

Then the expected gain at node C is

$$(361.9)(0.315) + (-50)(0.420) + (-50)(0.265) = 79.75$$

Since this value is greater than the expected gain at node B, the decision leading to node C, namely D_{11}, is the recommended one. The city should conduct the pilot program and then convert to electrically powered vehicles only if the pilot program has indicated a savings. This solution to the problem is represented in Fig. 18-6 by the subtree made up of all paths from node A that are not blocked by a cross.

18.10 Devise a situation in which the gains listed in Table 18-2 do not realistically reflect the actual worth of the payoffs to the landowner in Example 18.1. Show how the von Neumann utility function can be used to correct the inequities.

The payoffs in descending order of preference are

$$e_1 = \$2\,000\,000 \qquad e_2 = \$660\,000 \qquad e_3 = \$60\,000 \qquad e_4 = -\$100\,000$$

If \$100 000 represents the entire life savings of the landowner, then losing it would be catastrophic. Avoiding such a loss might be more important to the landowner than winning \$2 000 000, yet this preference is not reflected in the raw dollar figures of the payoffs. Furthermore, \$660 000 might be enough money to satisfy all the landowner's earthly wants. Two million dollars is obviously better; but it might not be three times as valuable, as suggested by the raw numbers.

The landowner might set the utility of e_1 at 100 and that of e_4 at -1000 to reflect the fear of losing her life savings. After much introspection, she might find that she is indifferent between receiving e_2 with certainty and participating in the lottery $\mathscr{L}(e_1, e_4; 0.999)$. Then the utility of e_2 would be

$$u(e_2) = (0.999)u(e_1) + (1 - 0.999)u(e_4) = (0.999)(100) + (0.001)(-1000) = 98.9$$

The landowner might also find that she is indifferent between receiving e_3 with certainty and participating in the lottery $\mathscr{L}(e_1, e_4; 0.95)$. Then the utility of e_3 is

$$u(e_3) = (0.95)u(e_1) + (1 - 0.95)u(e_4) = (0.95)(100) + (0.05)(-1000) = 45$$

The gain matrix for the decision process in terms of these utilities is Table 18-5.

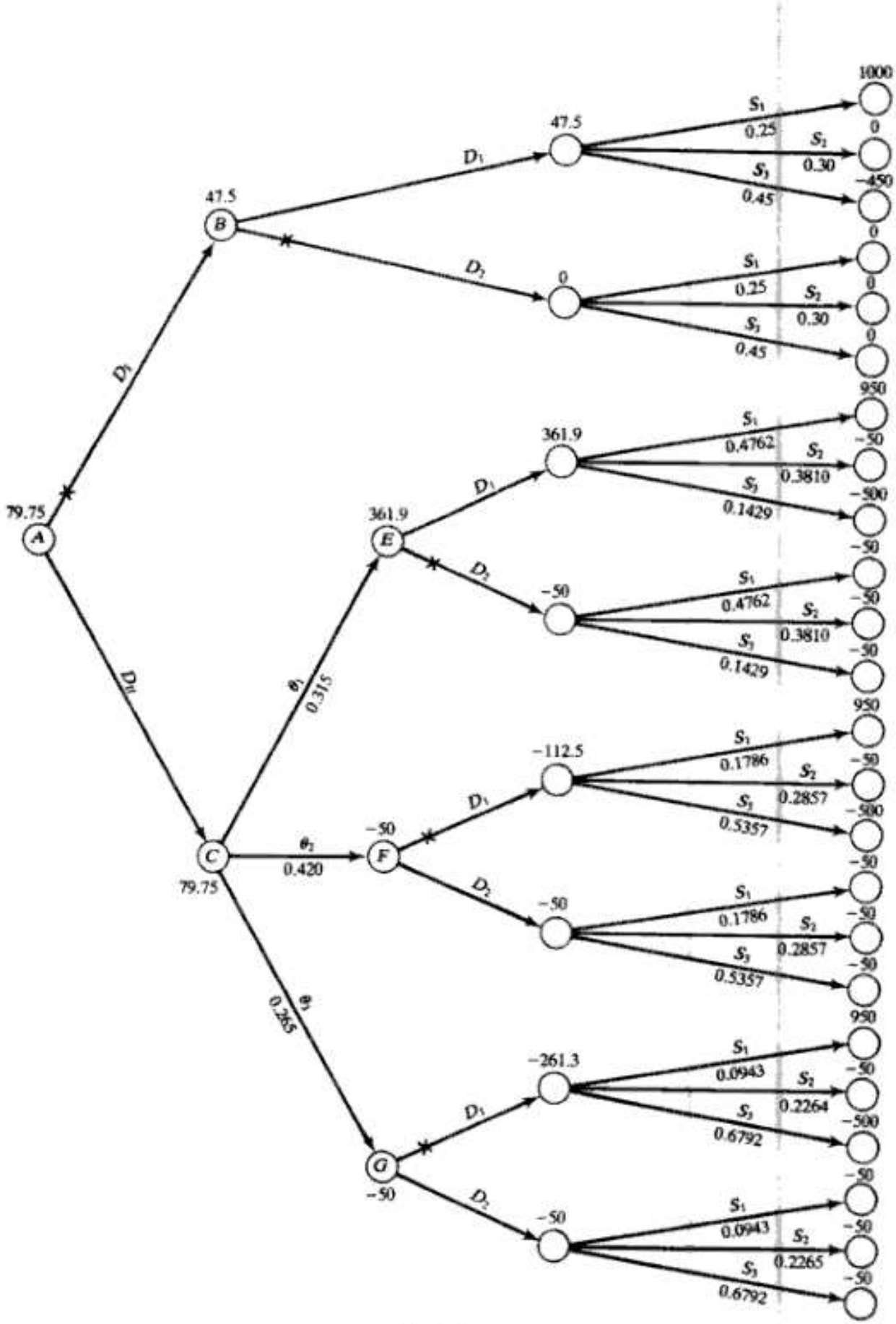
79.75
A
D_1
D_2
47.5
B
D_1
D_2
47.5
0
S_1 0.25
S_2 0.30
S_3 0.45
1000
0
−450
0
0
0
0
79.75
C
θ_1 0.315
θ_2 0.420
θ_3 0.265
361.9
E
361.9
−50
S_1 0.4762
S_2 0.3810
S_3 0.1429
950
−50
−500
−50
−50
−50
−50
−112.5
−50
S_1 0.1786
S_2 0.2857
S_3 0.5357
950
−50
−500
−50
−50
−50
−50
−261.3
−50
S_1 0.0943
S_2 0.2264
S_3 0.6792
950
−50
−500
−50
−50
−50
−50
S_1 0.0943
S_2 0.2265
S_3 0.6792
−50
−50
−50
−50

Fig. 18-6

Table 18-5

	S_1	S_2
D_1	45	98.9
D_2	−1000	100

18.11 Determine the recommended decision under the *a priori* criterion for the landowner in Example 18.1, if the gain matrix is given by the utilities in Table 18-5 and if the landowner estimates the probability of gas being present as 0.6.

With $P(S_1) = 0.4$ and $P(S_2) = 0.6$, the expected gains for D_1 and D_2 are, respectively,

$$E(G_1) = (45)(0.4) + (98.9)(0.6) = 77.34 \qquad E(G_2) = (-1000)(0.4) + (100)(0.6) = -340$$

The recommended decision is D_1. Contrast this result with the result of Problem 18.3.

18.12 A woman has a ticket to a football game on a day for which the weather bureau predicts rain with a likelihood of 40 percent. She can stay home and watch the game on television, the preferable choice under rainy conditions, or she can go to the stadium, the preferable choice under dry conditions. Which decision should she make?

Designate the decision to go to the stadium by D_1 and the decision to stay home by D_2. The states of nature are S_1 (it will rain) and S_2 (it will not rain), with $P(S_1) = 0.4$, $P(S_2) = 0.6$. The four possible combinations of events, listed in descending order of desirability to the woman, are

e_1: Goes to the stadium and it does not rain.
e_2: Stays home and it rains.
e_3: Stays home and it does not rain.
e_4: Goes to the stadium and it rains.

The individual quantifies her levels of satisfaction for e_1 and e_4 at 100 and 0, respectively. After careful consideration, she feels that she would be indifferent to having e_2 occur with certainty or participating in the lottery $\mathscr{L}(e_1, e_4; 0.85)$. She sets the equivalence probability for e_3 at $p_3 = 0.5$. Therefore,

$$u(e_2) = (0.85)(100) + (0.15)(0) = 85 \qquad u(e_3) = (0.5)(100) + (0.5)(0) = 50$$

The gain matrix in terms of utilities for this process becomes

	S_1	S_2
D_1	0	100
D_2	85	50

The expected gains for decisions D_1 and D_2 are, respectively,

$$E(G_1) = (0)(0.4) + (100)(0.6) = 60$$

$$E(G_2) = (85)(0.4) + (50)(0.6) = 64$$

Since $E(G_2)$ is greater than $E(G_1)$, the recommended decision under the *a priori* criterion is D_2; the woman should stay home.

18.13 Solve Problem 18.4 if the department store's utility for money is given by Fig. 18-7.

Since the monetary amounts in Table 18-3 do not reflect the relative worth to the store of the various payoffs, we replace each amount by its utility, obtaining Table 18-6.

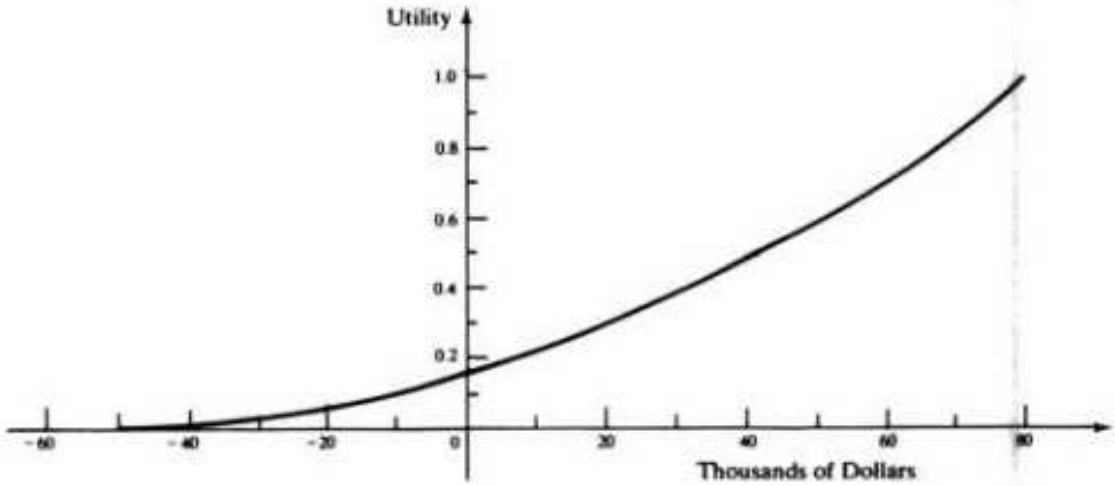

Fig. 18-7

Table 18-6

	S_1	S_2	S_3
D_1	0	0.15	1
D_2	0.09	0.38	0.43
D_3	0.72	0.53	0.02
D_4	1	0.48	0

With $P(S_1) = 0.25$, $P(S_2) = 0.4$, $P(S_3) = 0.35$, the expected gains are

$$E(G_1) = (0)(0.25) + (0.15)(0.4) + (1)(0.35) = 0.410$$
$$E(G_2) = (0.09)(0.25) + (0.38)(0.4) + (0.43)(0.35) = 0.325$$
$$E(G_3) = (0.72)(0.25) + (0.53)(0.4) + (0.02)(0.35) = 0.399$$
$$E(G_4) = (1)(0.25) + (0.48)(0.4) + (0)(0.35) = 0.442$$

The recommended decision under the *a priori* criterion is now D_4.

18.14 The *certainty equivalent* of a decision with monetary payoffs is a dollar amount C having a utility equal to the expected utility of that decision. Determine the certainty equivalents for each of the decisions in Problem 18.13.

The expected utility for D_1 was determined in Problem 18.13 to be 0.410. Using Fig. 18-7, we estimate $u(33\,000) = 0.410$; hence $C_1 = \$33\,000$.

Similarly, we estimate the certainty equivalents of D_2, D_3, and D_4 as $C_2 = \$24\,000$, $C_3 = \$32\,000$, and $C_4 = \$36\,000$, respectively.

18.15 The *risk premium* for a decision with monetary payoffs is the amount R by which the expected dollar gain from that decision exceeds the certainty equivalent of the decision. Determine the risk premiums for each of the decisions in Problem 18.13.

The expected dollar gains for D_1 through D_4 were obtained in Problem 18.4 as \$15 500, \$21 750, \$22 500, and \$20 250, respectively. Taking the differences between these amounts and their corresponding certainty

equivalents as determined in Problem 18.14, we find that

$$R_1 = 15\,500 - 33\,000 = -\$17\,500$$
$$R_2 = 21\,750 - 24\,000 = -\$2250$$
$$R_3 = 22\,500 - 32\,000 = -\$9500$$
$$R_4 = 20\,250 - 36\,000 = -\$15\,750$$

Supplementary Problems

18.16 *Determine recommended decisions under each naive criterion for the following decision process.* In the fall, a farmer is offered \$50 000 for his orange crop, which will be harvested in the beginning of the following year. If the farmer accepts the offer, the money is his, regardless of the quality or quantity of the harvest. If the farmer does not accept the offer, he must sell his oranges on the open market after they are harvested. Under normal growing conditions, the farmer can anticipate receiving \$70 000 on the open market for his harvest. If he experiences a frost, however, then much of his harvest will be ruined, and he can anticipate receiving only \$15 000 on the open market.

18.17 A manufacturer must decide whether to extend credit to a retailer wishing to open an account with the firm. Past experience with new accounts shows that 50 percent are poor risks, 30 percent are average risks, and 20 percent are good risks. If credit is extended, the manufacturer can expect to lose \$30 000 with a poor risk, make \$25 000 with an average risk, and make \$50 000 with a good risk. If credit is not extended, the manufacturer neither makes nor loses money, since no business is transacted with the retailer. Determine the recommended decision under the *a priori* criterion.

18.18 A corporation is considering a new production process that, if efficient, will save the corporation \$350 000 a year for the next 5 years. If it is not efficient, the amount of lost sales plus the expense of converting to the new process and then reconverting to the old will come to \$925 000. Determine the recommended decision under the *a priori* criterion if the company feels that the new process has an 80 percent chance of being efficient.

18.19 Determine the recommended decision under the *a priori* criterion for the process of Problem 18.16 if, in the past, the farmer has lost much of his harvest to frost one out of every 7 years.

18.20 Assume that prior to making a decision, the manufacturer described in Problem 18.17 pays \$1000 for a credit rating report on the retailer. The report rates the retailer as a poor risk, but the manufacturer knows that the rating procedure is not totally reliable. The credit bureau concedes that it will rate an average risk as a poor risk 30 percent of the time, and it will rate a good risk as a poor risk 5 percent of the time. It will rate a poor risk correctly 90 percent of the time. Based on these data, determine the recommended decision for the manufacturer under the *a posteriori* criterion.

18.21 The corporation of Problem 18.18 has a third option available to it; namely, to integrate one stand-alone phase of the new process into its current process and test its efficiency before deciding whether to convert. The cost of testing the stand-alone phase is \$125 000, of which \$75 000 is recoverable if the new process is adopted. If the stand-alone phase is not efficient, then an additional \$25 000 in sales is lost during the test.

If the entire new process is efficient, then the stand-alone phase should operate efficiently with probability 0.99. If the entire new process is not efficient, the stand-alone phase could still operate efficiently, and the company estimates this would happen with probability 0.6. Construct a decision tree for the entire decision process and determine the recommended actions.

18.22 The president of a firm in a highly competitive industry believes that an employee of the company is providing confidential information to the competition. She is 90 percent certain that this informer is the treasurer of the firm, whose contacts have been extremely valuable in obtaining financing for the company. If she fires him and he is the informer, the company gains \$100 000. If he is fired but is not the informer, the company loses his expertise and still has an informer on the staff, for a net loss to the company of \$500 000. If the president does not fire the treasurer, the company loses \$300 000 whether or not he is the informer, since in either case the informer is still with the company.

Before deciding the fate of the treasurer, the president could order lie detector tests. To avoid possible lawsuits, such tests would have to be administered to all company employees, at a total cost of \$30 000. Another problem is that lie detector tests are not definitive. If a person is lying, the test will reveal it 90 percent of the time; but if a person is not lying, the test will indicate it only 70 percent of the time. What actions should the president take?

18.23 A food processor is considering the introduction of a new line of instant lunches. On a national basis, the company estimates a net profit of 50 million dollars if the product is highly successful, a net profit of 20 million dollars if it is moderately successful, and a loss of 14 million dollars if it is not successful. If the company does not introduce the line, its research and development costs totaling 3 million dollars must be written off as a loss. Current estimates place the probability of high success at 0.1 and the probability of moderate success at 0.4.

Prior to introducing it on a national level, the company could test market the line on a regional basis. The cost of such a test would be one million dollars. Although the test results would be significant, they would not be conclusive; the reliability of such a test is given by the conditional probabilities in Table 18-7. What should be the processor's decisions?

Table 18-7

		Test results will indicate		
		High Success	Moderate Success	No Success
Given that a product is	Highly Successful	0.6	0.4	0
	Moderately Successful	0.2	0.6	0.2
	Not Successful	0.1	0.3	0.6

18.24 Determine the maximum amount of money the city in Problem 18.9 should be willing to pay for the pilot program. (*Hint*: The *value* of a test is the difference between the expected gain of the process if the test is conducted *at no cost* and the expected gain of the process if no testing is conducted.)

18.25 Determine the maximum amount of money that the president in Problem 18.22 should be willing to pay for lie detector tests. Construct a tree for the process.

18.26 Solve Problem 18.23 if the processor's utility for money is given by Fig. 18-8.

18.27 Derive utilities for the dollar outcomes $e_1 = \$5000$, $e_2 = \$4000$, $e_3 = \$3000$, $e_4 = \$2000$, and $e_5 = \$1000$ if $u(e_1) = 100$, $u(e_5) = -50$, and the equivalence probabilities are $p_2 = 0.9$, $p_3 = 0.7$, and $p_4 = 0.2$.

18.28 Determine the certainty equivalent and the risk premium for the recommended decisions in Problem 18.26.

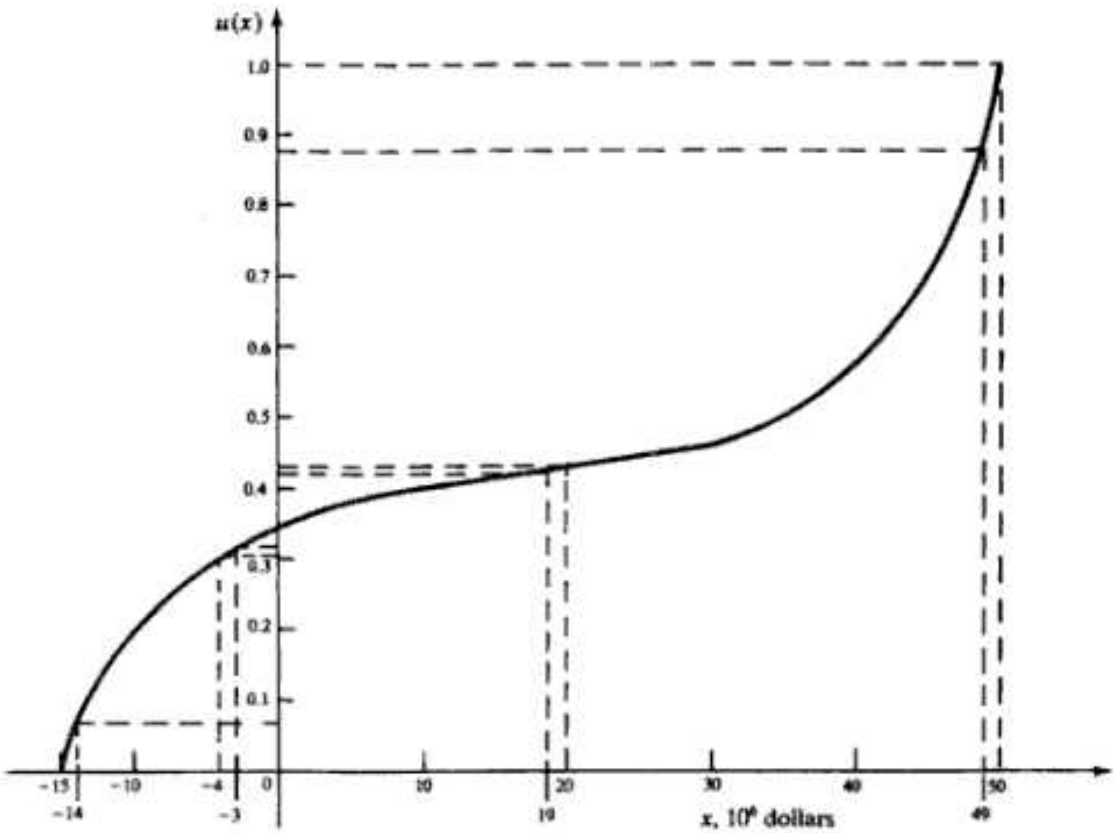

Fig. 18-8

18.29 A decision maker is *risk-seeking* with respect to a decision process over a specified range of payoffs if his or her utility function $u(x)$ is strictly convex (i.e., $u''(x) > 0$) over that range. The decision maker is *risk-averse* if $u(x)$ is strictly concave (i.e., $u''(x) < 0$) over that range. If $u(x)$ is a straight line (i.e., $u''(x) = 0$) on that range, the decision maker is *risk-indifferent* there. Determine the risk attitudes of the processor in Problem 18.26.

18.30 From the definitions of concave and convex functions given in Chapter 11 and the fact that utility functions increase monotonically, show that risk premiums are positive for a risk-averse decision maker and negative for a risk-seeking decision maker.

18.31 A *regret matrix* is a gain matrix in which the elements of each column have been diminished by the largest element of that column. Give the regret matrix corresponding to Table 18-3.

18.32 Solve Problems 18.1 and 18.3 using the regret matrix instead of Table 18-2. Thereby verify that recommended decisions with a regret matrix need not be the same as those with a gain matrix under naive criteria, but the two matrices always yield the same recommended decision under the *a priori* criterion.

Chapter 19

Dynamic Programming

MULTISTAGE DECISION PROCESSES

A *multistage decision process* is a process that can be separated into a number of sequential steps, or *stages*, which may be completed in one or more ways. The options for completing the stages are called *decisions*. A *policy* is a sequence of decisions, one for each stage of the process.

The condition of the process at a given stage is called the *state* at that stage; each decision effects a transition from the current state to a state associated with the next stage. A multistage decision process is *finite* if there are only a finite number of stages in the process and a finite number of states associated with each stage.

Many multistage decision processes have returns (costs or benefits) associated with each decision, and these returns may vary with both the stage and state of the process. The objective in analyzing such processes is to determine an *optimal policy*, one that results in the best total return.

Example 19.1 In Problem 1.15, the process of determining how much to invest in each opportunity in order to maximize the total return is a three-stage decision process. Consideration of opportunity i constitutes stage i ($i = 1, 2, 3$). The state of the process at stage i is the amount of funds still available for investment at stage i. For stage 1, the beginning of the process, there are 4 units of money available; hence the state is 4. For stages 2 and 3, the states can be 0, 1, 2, 3, or 4, depending on the allocations (decisions) at previous stages. The decision at stage i is represented by the variable x_i; the possible values of x_i are the integers from 0 to the state at stage i, inclusive.

An optimal policy for the process is determined in Problem 19.1.

A multistage decision process is *deterministic* if the outcome of each decision (in particular, the state produced by the decision) is known exactly.

A MATHEMATICAL PROGRAM

The mathematical program

$$\begin{aligned} \text{optimize:} \quad & z = f_1(x_1) + f_2(x_2) + \cdots + f_n(x_n) \\ \text{subject to:} \quad & x_1 + x_2 + \cdots + x_n \le b \\ \text{with:} \quad & \text{all variables nonnegative and integral} \end{aligned} \tag{19.1}$$

in which $f_1(x_1), f_2(x_2), \ldots, f_n(x_n)$ are known (nonlinear) functions of a single variable and b is a known nonnegative integer, models an important class of multistage decision processes. Here the number of stages is n. Stage 1 involves the specification of decision variable x_1, with a resulting contribution $f_1(x_1)$ to the total return; etc. The states are $0, 1, 2, \ldots, b$, representing possible values for the number of units available for allocation. All stages after the first have these same states associated with them; stage 1 has the single state b.

Example 19.2 Program (*19.1*), with $n = 3$ and $b = 4$, models Problem 1.15.

DYNAMIC PROGRAMMING

Dynamic programming is an approach for optimizing multistage decision processes. It is based on Bellman's principle of optimality:

Principle of optimality. An optimal policy has the property that, regardless of the decisions taken to enter a particular state in a particular stage, the remaining decisions must constitute an optimal policy for leaving that state.

To implement this principle, begin with the last stage of an n-stage process and determine for each state the *best policy for leaving that state and completing the process*, assuming that all preceding stages have been completed. Then move backwards through the process, stage by stage. At each stage, determine the best policy for leaving each state and completing the process, assuming that all preceding stages have been completed and making use of the results already obtained for the succeeding stage. In doing so, the entries of Table 19-1 will be calculated, where

$u \equiv$ the state variable, whose values specify the states

$m_j(u) \equiv$ optimum return from completing the process beginning at stage j in state u

$d_j(u) \equiv$ decision taken at stage j that achieves $m_j(u)$

Table 19-1

	u					
	0	1	2	3	...	
$m_n(u)$						Last stage
$d_n(u)$						
$m_{n-1}(u)$						Next-to-last stage
$d_{n-1}(u)$						
...	...	...	...	...	...	
$m_1(u)$						First stage
$d_1(u)$						

The entries corresponding to the last stage of the process, $m_n(u)$ and $d_n(u)$, are generally straightforward to compute. (See Problems 19.1 and 19.3.) The remaining entries are obtained recursively; that is, the entries for the jth stage ($j = 1, 2, \ldots, n-1$) are determined as functions of the entries for the $(j+1)$st stage. The recursion formula is problem dependent, and must be obtained anew for each different type of multistage process. (See Problems 19.5 and 19.8.)

For simplicity, Table 19-1 has been drawn as though each stage had the same set of states. While this can always be brought about artificially (by suitably penalizing the return functions m_j), it is often more natural to use different state variables, each with its own range of values, for the different stages. Such use, of course, in no way alters the application of the principle of optimality. (See Problems 19.24 and 19.25.)

The dynamic programming approach is particularly well suited to those processes modeled by system (*19.1*)—processes in which each decision pays off separately, independent of previous decisions. For

system (*19.1*), the values of $m_n(u)$ for $u = 0, 1, \ldots, b$ are given by the formula

$$m_n(u) = \underset{0 \le x \le u}{\text{optimum}} \{f_n(x)\} \tag{19.2}$$

The recursion formula is (see Problem 19.1)

$$m_j(u) = \underset{0 \le x \le u}{\text{optimum}} \{f_j(x) + m_{j+1}(u - x)\} \tag{19.3}$$

for $j = n - 1, n - 2, \ldots, 1$. In (*19.2*), the decision variable x [which is denoted x_n in (*19.1*)] runs through integral values, as does x ($\equiv x_j$) in (*19.3*). That value of x which yields the optimum in (*19.2*) is taken as $d_n(u)$, and that value of x which yields the optimum in (*19.3*) is taken as $d_j(u)$. If more than one value of x yields either optimum, arbitrarily choose one as the optimal decision. The optimal solution to program (*19.1*) is $z^* = m_1(b)$, the optimal return from completing the process beginning at stage 1 with b units available for allocation. With z^* determined, the optimal decisions $x_1^*, x_2^*, \ldots, x_n^*$ are found sequentially from

$$\begin{aligned} x_1^* &= d_1(b) \\ x_2^* &= d_2(b - x_1^*) \\ x_3^* &= d_3(b - x_1^* - x_2^*) \\ &\cdots\cdots\cdots\cdots\cdots\cdots \\ x_n^* &= d_n(b - x_1^* - x_2^* - \cdots - x_{n-1}^*) \end{aligned} \tag{19.4}$$

DYNAMIC PROGRAMMING WITH DISCOUNTING

If money earns interest at the rate i per period, an amount $P(n)$ due n periods in the future has the *present* (or *discounted*) *value*

$$P(0) = \alpha^n P(n) \qquad \text{where} \qquad \alpha \equiv \frac{1}{1 + i} \tag{19.5}$$

Discounting, the replacement of all dollar sums in the future by their present values, is often incorporated in those multistage decision processes in which the stages represent time periods and the objective is to optimize a monetary quantity. In the solution by dynamic programming, the recurrence formula for $m_j(u)$, the best return beginning in stage j and state u, involves terms of the form $m_{j+c}(y)$, the best return beginning in stage $j + c$ (c time periods after stage j) and state y. [See, for example, (*19.3*).] If $m_{j+c}(y)$ is multiplied by α^c, where α is the above-defined *discount factor*, then $m_{j+c}(y)$ is discounted to its present value at the beginning of stage j. It follows that $m_1(u)$ will be discounted to the beginning of stage 1, which is the start of the process. (See Problem 19.10.)

STOCHASTIC MULTISTAGE DECISION PROCESSES

A multistage decision process is *stochastic* if the return associated with at least one decision in the process is random. This randomness generally enters in one of two ways: either the states are uniquely determined by the decisions but the returns associated with one or more states are uncertain (see Problem 19.11) or the returns are uniquely determined by the states but the states arising from one or more decisions are uncertain (see Problem 19.12).

If the probability distributions governing the random events are known and if the number of stages and the number of states are finite, then the dynamic programming approach introduced earlier in the chapter is useful for optimizing a stochastic multistage decision process. The general procedure is to

optimize the expected value of the return. (For an exception, see Problem 19.13.) In those cases where the randomness occurs exclusively in the returns associated with the states and not in the states arising from the decisions, this procedure has the effect of transforming a stochastic process into a deterministic one.

POLICY TABLES

For processes in which randomness exists in the states associated with the decisions, a policy—in particular, an optimal policy—may be exhibited as a *policy table*, similar to Table 19-2. Here, $d_j(a_k)$ ($j = 1, 2, \ldots, n$; $k = 1, 2, \ldots, r$) denotes the decision at stage j if the process finds itself in state a_k. (See Problem 19.13.)

Table 19-2

Stages	States: a_1	a_2	$\cdots$	a_r
1	$d_1(a_1)$	$d_1(a_2)$	$\cdots$	$d_1(a_r)$
2	$d_2(a_1)$	$d_2(a_2)$	$\cdots$	$d_2(a_r)$
$\cdots$	$\cdots$	$\cdots$	$\cdots$	$\cdots$
n	$d_n(a_1)$	$d_n(a_2)$	$\cdots$	$d_n(a_r)$

Solved Problems

19.1 Determine an optimal policy for Problem 1.15 (see Example 19.1).

We begin by considering the last stage of the process, stage 3, under the assumption that all previous stages, stages 1 and 2, have been completed. That is, allocations to investments 1 and 2 have been made (although, at this time, we do not know what they are), and we are to complete the process by allocating units of money to investment 3. Since we do not know how many units were allocated to the first two investments, we do not know how many units are available for investment 3; we must therefore consider all possibilities. There will be either 0, 1, 2, 3, or 4 units available.

No matter how many units of money are available at stage 3, it is clear from the definition of $f_3(x)$ in Table 1-2 that the best way to complete the process is to allocate all the available units to investment 3. The same conclusion follows from applying (*19.2*). Thus,

$$m_3(4) = \max\{f_3(0), f_3(1), f_3(2), f_3(3), f_3(4)\}$$
$$= \max\{0, 1, 4, 5, 8\} = 8 \qquad \text{with} \qquad d_3(4) = 4$$
$$m_3(3) = \max\{f_3(0), f_3(1)\, f_3(2), f_3(3)\}$$
$$= \max\{0, 1, 4, 5\} = 5 \qquad \text{with} \qquad d_3(3) = 3$$
$$m_3(2) = \max\{f_3(0), f_3(1), f_3(2)\}$$
$$= \max\{0, 1, 4\} = 4 \qquad \text{with} \qquad d_3(2) = 2$$
$$m_3(1) = \max\{f_3(0), f_3(1)\} = \max\{0, 1\} = 1 \qquad \text{with} \qquad d_3(1) = 1$$
$$m_3(0) = \max\{f_3(0)\} = \max\{0\} = 0 \qquad \text{with} \qquad d_3(0) = 0$$

These results give us the first two rows in the tabular solution, Table 19-3.

Table 19-3

	u				
	0	1	2	3	4
$m_3(u)$	0	1	4	5	8
$d_3(u)$	0	1	2	3	4
$m_2(u)$	0	1	4	6	8
$d_2(u)$	0	1	0	3	0
$m_1(u)$	...	...	...	...	9
$d_1(u)$	...	...	...	...	2

Having completed stage 3, we next consider stage 2 under the assumption that stage 1 has been completed (although, at this time, we do not know how). Since we do not know how many units were allocated to investment 1, we do not know how many units are available for investment 2; we must therefore consider all possibilities.

One possibility is that 4 units are available at stage 2, which presupposes that no units were allocated to investment 1. Now, all or some of these 4 units can be allocated to investment 2, with the remainder available for stage 3. If x of these 4 units are allocated to investment 2, the return if $f_2(x)$, and the remaining $4 - x$ units are available for stage 3. But we have already found the best continuation from stage 3 when $4 - x$ units are at hand; namely, $m_3(4 - x)$. The total return, therefore, is $f_2(x) + m_3(4 - x)$; and the value of x ($x = 0, 1, 2, 3, 4$) that maximizes this total return represents the optimal decision at stage 2 with 4 units available. Formula (*19.3*), with $j = 2$ and $u = 4$, simply formalizes this conclusion.

$$m_2(4) = \max\{f_2(0) + m_3(4-0), f_2(1) + m_3(4-1), f_2(2) + m_3(4-2), f_2(3) + m_3(4-3), f_2(4) + m_3(4-4)\}$$
$$= \max\{0+8, 1+5, 3+4, 6+1, 7+0\} = 8 \qquad \text{with} \qquad d_2(4) = 0.$$

Similarly treating the other possibilities at stage 2, we obtain:

$$m_2(3) = \max\{f_2(0) + m_3(3-0), f_2(1) + m_3(3-1), f_2(2) + m_3(3-2), f_2(3) + m_3(3-3)\}$$
$$= \max\{0+5, 1+4, 3+1, 6+0\} = 6 \qquad \text{with} \qquad d_2(3) = 3$$
$$m_2(2) = \max\{f_2(0) + m_3(2-0), f_2(1) + m_3(2-1), f_2(2) + m_3(2-2)\}$$
$$= \max\{0+4, 1+1, 3+0\} = 4 \qquad \text{with} \qquad d_2(2) = 0$$
$$m_2(1) = \max\{f_2(0) + m_3(1-0), f_2(1) + m_3(1-1)\}$$
$$= \max\{0+1, 1+0\} = 1 \qquad \text{with} \qquad d_2(1) = 1 \text{ (breaking the tie arbitrarily)}$$
$$m_2(0) = \max\{f_2(0) + m_3(0-0)\} = \max\{0+0\} = 0 \qquad \text{with} \qquad d_2(0) = 0$$

Collecting the calculations for stage 2, we obtain the third and fourth rows of Table 19-3.

Having completed stage 2, we now turn to stage 1. There is only one state associated with this stage, $u = 4$.

$$m_1(4) = \max\{f_1(0) + m_2(4-0), f_1(1) + m_2(4-1), f_1(2) + m_2(4-2), f_1(3) + m_2(4-3), f_1(4) + m_2(4-4)\}$$
$$= \max\{0+8, 2+6, 5+4, 6+1, 7+0\} = 9 \qquad \text{with} \qquad d_1(4) = 2$$

With these data we complete Table 19-3.

The maximum return that can be realized from this three-stage investment program beginning with 4 units is $m_1(4) = 9$ units. To achieve this return, allocate $d_1(4) = 2$ units to investment 1, leaving $4 - 2 = 2$ units for stage 2. But $d_2(2) = 0$, indicating that no units should be expended at this stage if only 2 units are

available. Thus, 2 units remain for stage 3. Since $d_3(2) = 2$, both units should be allocated to investment 3. These conclusions are formalized by equations (*19.4*). The optimal policy, therefore, is to allocate 2 units to investment 1, 0 units to investment 2, and 2 units to investment 3.

19.2 An independent trucker has 8 m^3 of available space on a truck scheduled to depart for New York City. A distributor with large quantities of three different appliances, all destined for New York City, has offered the trucker the following fees to transport as many items as the truck can accommodate:

Appliance	Fee, \$/item	Volume, m^3/item
I	11	1
II	32	3
III	58	5

How many items of each appliance should the trucker accept to maximize shipping fees without exceeding the truck's available capacity?

This problem can be viewed as a three-stage process, involving allocations of space to appliances I, II, and III, respectively. It can be modeled by program (*19.1*), with $n = 3$, $b = 8$, if x_j ($j = 1, 2, 3$) is defined as the *number of cubic meters of appliance* j to be shipped, and if $f_j(x_j)$, the return from allocating x_j to stage j, is defined by Table 19-4. The state at a given stage is the number of cubic meters of space still unoccupied.

Table 19-4

f \ x	0	1	2	3	4	5	6	7	8
$f_1(x)$	0	11	22	33	44	55	66	77	88
$f_2(x)$	0	0	0	32	32	32	64	64	64
$f_3(x)$	0	0	0	0	0	58	58	58	58

The first row of Table 19-4 is straightforward, since each additional cubic meter allocated to applicance I brings an additional \$11 return. To generate the second row of the table, note that each appliance II occupies 3 m^3, so that until at least 3 m^3 of space is available, no item of this type can be shipped and no return realized. If 3, 4, or 5 m^3 is allocated to appliance II, only one item can be accommodated, for a net return of \$32. If 6, 7 or 8 m^3 is allocated, then two items can be shipped, for a net return of \$64. A similar analysis holds for appliance III. No return is realized until at least 5 m^3 is allocated to it; and if 5, 6, 7, or 8 m^3 is allocated, then only one appliance III can be shipped, for a net return of \$58.

The model, program (*19-1*), is solved by use of (*19-2*) and (*19-3*), exactly as in Problem 19.1. The results are exhibited in Table 19-5; all ties were broken by choosing the *smallest* maximizing x as $d_j(u)$. Table 19-5 shows that the best total return the trucker can obtain, starting stage 1 with 8 m^3 of available space, is $m_1(8) = \$91$. To achieve this, 3 m^3 [$d_1(8) = 3$] must be allocated to appliance I, leaving 5 m^3 for the following stages. No volume should be allocated to appliance II [$d_2(5) = 0$], leaving 5 m^3 for stage 3, all of which should be assigned to appliance III [$d_3(5) = 5$]. In terms of items, the trucker should take three items of appliance I and one item of appliance III.

Table 19-5

	u								
	0	1	2	3	4	5	6	7	8
$m_3(u)$	0	0	0	0	0	58	58	58	58
$d_3(u)$	0	0	0	0	0	5	5	5	5
$m_2(u)$	0	0	0	32	32	58	64	64	90
$d_2(u)$	0	0	0	3	3	0	6	6	3
$m_1(u)$	...	...	...	...	...	...	...	...	91
$d_1(u)$	...	...	...	...	...	...	...	...	3

19.3 Convert the following program into system (*19.1*):

$$\begin{aligned} \text{maximize:}\quad & z = 11y_1 + 32y_2 + 58y_3 \\ \text{subject to:}\quad & y_1 + 3y_2 + 5y_3 \le 8 \\ \text{with:}\quad & \text{all variables nonnegative and integral} \end{aligned} \tag{1}$$

This program is a mathematical model for Problem 19.2 if we designate y_j ($j = 1, 2, 3$) as the *number of items* (in contrast to the number of cubic meters) of appliance j to be shipped. The linear constraint models the volume limitation, the coefficient of y_j being the volume per item of appliance j. As was shown in Problem 19.2, a mathematical model for this program in the form of (*19.1*)—which has *unit coefficients* in the inequality constraint—is obtained if new variables x_j are defined to denote the number of cubic meters of each appliance to be shipped. We then have

$$\begin{aligned} \text{maximize:}\quad & z = f_1(x_1) + f_2(x_2) + f_3(x_3) \\ \text{subject to:}\quad & x_1 + x_2 + x_3 \le 8 \\ \text{with:}\quad & \text{all variables nonnegative and integral} \end{aligned} \tag{2}$$

where the return functions $f_j(x)$ are defined by Table 19-4.

Observe that (*1*) is *not* taken into the form (*19.1*) by the linear transformation

$$x_1 = y_1 \qquad x_2 = 3y_2 \qquad x_3 = 5y_3$$

Although this transformation produces the desired type of objective function and the desired type of inequality constraint, it maps the set of nonnegative integer points (y_1, y_2, y_3) into a *subset* of the nonnegative integer points (x_1, x_2, x_3). One needs precisely the functions $f_j(x)$ defined in Problem 19.2 to make possible the expansion of this subset into the whole set.

19.4 Convert the following program into system (*19.1*):

$$\begin{aligned} \text{maximize:}\quad & z = g_1(y_1) + g_2(y_2) + g_3(y_3) + g_4(y_4) \\ \text{subject to:}\quad & 2y_1 + y_2 + 6y_3 + 3y_4 \le 9 \\ \text{with:}\quad & \text{all variables nonnegative and integral} \end{aligned}$$

where the $g_j(y)$ ($j = 1, 2, 3, 4$) are defined in Table 19-6.

Table 19-6

f \ x	0	1	2	3	4	5	6	7	8	9
$g_1(y)$	0	4	8	11	14	17	19	21	22	23
$g_2(y)$	0	2	4	6	8	10	12	14	16	18
$g_3(y)$	0	1	2	3	6	11	15	20	26	26
$g_4(y)$	0	1	7	9	14	16	21	23	25	27

Mimicking the approach used in Problem 19.3, we think of y_j as the *number of items of product* j to be shipped in a certain truck. Table 19-6 then represents a schedule of shipping fees, while the linear constraint models the limitation on the total volume that can be accommodated, 9 units. The coefficient of y_j in this constraint is interpreted as the volume occupied by one item of product j (see Table 19-7).

Table 19-7

Product	1	2	3	4
Volume/Item	2	1	6	3

We now designate new variables x_j ($j = 1, 2, 3, 4$) as the *number of units of volume of product* j to be shipped. Program (*1*) is equivalent to the following program of the form (*19.1*):

$$\begin{aligned} \text{maximize:} \quad & z = f_1(x_1) + f_2(x_2) + f_3(x_3) + f_4(x_4) \\ \text{subject to:} \quad & x_1 + x_2 + x_3 + x_4 \le 9 \\ \text{with:} \quad & \text{all variables nonnegative and integral} \end{aligned} \tag{2}$$

where $f_j(x_j)$ denotes the return from allocating x_j units of volume to product j. These functions are derived from Tables 19-6 and 19-7; for example,

$f_4(7)$ = return from shipping 7 units of volume of product 4

= return from shipping 2 items of product 4, since each item of product 4 requires 3 units of volume

$= g_4(2) = 7$

Continuing in this fashion, we complete Table 19-8.

Table 19-8

f \ x	0	1	2	3	4	5	6	7	8	9
$f_1(x)$	0	0	4	4	8	8	11	11	14	14
$f_2(x)$	0	2	4	6	8	10	12	14	16	18
$f_3(x)$	0	0	0	0	0	0	1	1	1	1
$f_4(x)$	0	0	0	1	1	1	7	7	7	9

19.5 *Establish a recursion formula analogous to (19.3) for the following problem.* A small firm can manufacture up to four computers weekly, and has agreed to deliver in each of the next 4 weeks three, two, four, and two computers, respectively. Production costs are a function of the number of computers manufactured, and are given (in thousands of dollars) as follows:

Units Produced, x	0	1	2	3	4
Cost, $f(x)$	4	13	19	27	32

Computers can be delivered to customers at the end of the same week in which they are manufactured, or they can be stored for future delivery at a cost of $4000 per week. Because of limited warehouse facilities, the company can store no more than three computers at a time. Current inventory is zero, and the firm desires no inventory at the end of week 4. How many computers should the firm manufacture in each of the next 4 weeks to meet all demands at a minimum total cost?

As shown in Chapter 9, production problems of this sort are modeled as transportation problems. Such models do not have the form (*19.1*); hence (*19.3*) is not applicable. Production problems are, however, multistage decision processes that can be solved by dynamic programming.

The present production problem is a four-stage process, with stage j representing the jth week ($j = 1, 2, 3, 4$). The state u at stage j is the number of computers in inventory at the beginning of week j. Let

$m_j(u) \equiv$ the minimum cost of completing the production schedule beginning at stage j in state u

$d_j(u) \equiv$ the production schedule for stage j that achieves $m_j(u)$

$D_j \equiv$ the demand in stage j

$I_j(u) \equiv$ the inventory cost charged against stage j when the state is u

$f_j(x) \equiv$ the cost of producing x computers in stage j

Consider the case where the company enters stage j with u computers in inventory. The company may produce any number of computers up to its capacity during this stage, provided the sum of its production level and its inventory level is at least as large as the demand D_j. Any amount in excess of D_j is stored in inventory for the next stage. In particular, if x computers are produced in stage j, a production cost $f_j(x)$ is incurred. The u units in stock generate a storage cost of $I_j(u)$, for a total cost in period j of $f_j(x) + I_j(u)$. This leaves $u + x - D_j$ units in inventory for stage $j + 1$, and the minimum cost for completing the process at that point is $m_{j+1}(u + x - D_j)$. Hence the total cost for completing the process beginning at stage j with a production schedule of x units is $f_j(x) + I_j(u) + m_{j+1}(u + x - D_j)$. The best decision for stage j with u units in stock is to produce that amount x which minimizes this cost. Accordingly, for $j = 1, 2, 3$,

$$\begin{aligned} m_j(u) &= \min_x \{f_j(x) + I_j(u) + m_{j+1}(u + x - D_j)\} \\ &= I_j(u) + \min_x \{f_j(x) + m_{j+1}(u + x - D_j)\} \end{aligned} \tag{1}$$

wherein x runs through the values 0, 1, 2, 3, 4. To guarantee that

$$0 \le u + x - D_j \le 3 \quad \text{(storage capacity)}$$

we set $m_{j+1}(u)$ equal to a prohibitively large penalty cost, M, whenever $u < 0$ or $u > 3$.

For the problem at hand, both the inventory costs and the production costs are independent of the stage, and are given respectively by $I_j(u) = 4u$ (thousand-dollar units) and $f_j(x) = f(x)$, as defned in the production cost table. The demands are $D_1 = 3$, $D_2 = 2$, $D_3 = 4$, and $D_4 = 2$. Relation (*1*) simplifies to

$$m_j(u) = 4u + \min_{x=0,1,2,3,4} \{f(x) + m_{j+1}(u + x - D_j)\} \tag{2}$$

19.6 Solve the problem formulated in Problem 19.5.

There are either zero, one, two, or three computers in stock at the beginning of week 4. Since no inventory is desired at the end of week 4, the optimal decision at stage 4 is to produce only that portion of the fourth week's demand, $D_4 = 2$, that cannot be met from inventory. Difficulty arises only if the incoming inventory is three computers, which exceeds the demand. To prevent this situation in the final policy, we assign it a very high penalty cost to completion, 1000 (thousand-dollar units). The cost to completion for all other states is the holding cost of the current inventory plus the production cost of the shortfall between demand and inventory. Thus,

$$m_4(3) = 1000$$

$$m_4(2) = \text{storage cost of two computers and production cost of zero computers}$$
$$= 4(2) + 4 = 12 \qquad \text{with} \qquad d_4(2) = 0$$

$$m_4(1) = \text{storage cost of one computer and production cost of one computer}$$
$$= 4(1) + 13 = 17 \qquad \text{with} \qquad d_4(1) = 1$$

$$m_4(0) = \text{storage cost of zero computers and production cost of two computers}$$
$$= 4(0) + 19 = 19 \qquad \text{with} \qquad d_4(0) = 2$$

Collecting these results, we have the first two rows of Table 19-9. The remaining entries are obtained by stepwise application of (2) of Problem 19.5, for $j = 3, 2, 1$. Again, $M = 1000$ is used to rule out impossible inventory states.

Table 19-9

	u			
	0	1	2	3
$m_4(u)$	19	17	12	1000
$d_4(u)$	2	1	0	...
$m_3(u)$	51	50	46	44
$d_3(u)$	4	3	2	1
$m_2(u)$	70	68	63	66
$d_2(u)$	2	1	0	0
$m_1(u)$	97	...	...	...
$d_1(u)$	3	...	...	...

It follows from Table 19-9 that the minimum production cost for completing the entire process beginning at stage 1 with 0 units in inventory is

$$m_1(0) = \$97\,000$$

To achieve this, the company must produce $d_1(0) = 3$ computers in the first week, all of which are shipped immediately to customers. The company then enters week 2 with an inventory of zero, and must produce $d_2(0) = 2$ computers, which again just meets demand. The optimal production level for stage 3 with zero computers in inventory is $d_3(0) = 4$, thereby exactly meeting demand; and the optimal production level for stage 4 with zero computers in storage is $d_4(0) = 2$. Thus, the optimal policy is to produce exactly the number of computers needed to satisfy the demand and never to have any in inventory.

19.7 A manufacturer has an order from a railroad for 12 diesels to be delivered three per year for the next 4 years. Production data are displayed in Table 19-10. Diesels can be delivered at the end of the same year in which they are produced, or they can be stored by the manufacturer, at a cost of \$30 000 per diesel per year, for shipment during a later year. Currently the manufacturer has one diesel in stock and would like to build this inventory to three at the end of four years. Determine a production schedule which will meet all requirements at a minimum total cost.

Table 19-10

	Years			
	1	2	3	4
Production Capacity (regular shift)	1	2	3	4
Production Capacity (overtime shift)	2	2	3	2
Cost per Diesel (regular shift)	\$350 000	\$370 000	\$395 000	\$420 000
Cost per Diesel (overtime shift)	\$375 000	\$400 000	\$430 000	\$465 000

We solve this problem by dynamic programming, using the notation and recursion formula (*I*) developed in Problem 19.5. There are four stages (years) to consider, with the decisions being the specifications of the production levels for the stages. The production capacity at each stage is the sum of the capacities for the regular and overtime shifts for that year. Setting $f_j(x) = M$, a very large penalty cost, if a level x cannot be met in stage j, we reformulate the production data as Table 19-11, with all costs given in thousand-dollar units.

Table 19-11

f \ x	0	1	2	3	4	5	6
$f_1(x)$	0	350	725	1100	M	M	M
$f_2(x)$	0	370	740	1140	1540	M	M
$f_3(x)$	0	395	790	1185	1615	2045	2475
$f_4(x)$	0	420	840	1260	1680	2145	2610

A final inventory of three diesels is most easily ensured by increasing the demand in the last stage by three. Thus, $D_1 = D_2 = D_3 = 3$, while $D_4 = 6$. The maximum possible inventory at any stage is five diesels, achieved at the end of stage 3 under conditions of maximum production at all stages. Consequently, we take the states to be $u = 0, 1, 2, 3, 4, 5$, and define $I_j(u) \equiv 30u$ (independent of j). Also we set $m_{j+1}(u) = M$ ($j = 1, 2, 3$) whenever $u > 5$ or $u < 0$.

Stage 4 if u diesels are in stock at the beginning of this stage, there is a holding charge of $30u$ thousand dollars. Then the minimum-cost decision for completing the process is to manufacture

$$d_4(u) = D_4 - u = 6 - u$$

diesels at a cost of $f_4(6-u)$. The minimum cost to completion is

$$m_4(u) = 30u + f_4(6-u)$$

These are the entries in the first two rows of Table 19-12.

The remainder of Table 19-12 is obtained from the recursion formula, (*1*) of Problem 19.5, in which the minimization is over $x = 0, \ldots, 6$. Ties for $d_2(2)$, $d_2(1)$, and $d_2(0)$ were broken by choosing the smallest minimizing x in each case. It is seen that the minimum total cost to complete the process is $m_1(1) = \$5\,680\,000$. To achieve this cost, a production run of two diesels is required for stage 1 [$d_1(1) = 2$], leaving nothing in storage; a production run of three diesels is required for stage 2 [$d_2(0) = 3$], leaving nothing in storage; a production run of five diesels is necessary for stage 3 [$d_3(0) = 5$], leaving two diesels in inventory; and a production run of four diesels is required for the last stage [$d_4(2) = 4$].

Table 19-12

	u					
	0	1	2	3	4	5
$m_4(u)$	2610	2175	1740	1350	960	570
$d_4(u)$	6	5	4	3	2	1
$m_3(u)$	3785	3385	2985	2620	2255	1890
$d_3(u)$	5	4	3	2	1	0
$m_2(u)$	4925	4555	4185	3815	3475	3135
$d_2(u)$	3	2	2	2	1	0
$m_1(u)$	...	5680	...	...	...	...
$d_1(u)$	...	2	...	...	...	...

19.8 *Establish a recursion formula for solving the following problem by dynamic programming.* A vending machine company currently operates a 2-year-old machine at a certain location. Table 19-13 gives estimates of upkeep, replacement cost, and income (all in dollars) for any machine at this location, as functions of the age of the machine.

Table 19-13

	Age, u					
	0	1	2	3	4	5
Income, $I(u)$	10000	9500	9200	8500	7300	6100
Maintenance, $M(u)$	100	400	800	2000	2800	3300
Replacement, $R(u)$	...	3500	4200	4900	5800	5900

As a matter of policy, no machine is ever kept past its sixth anniversary and replacements are only with new machines. Determine a replacement policy that will maximize the total profit from this one location over the next 4 years.

This equipment replacement problem is a four-stage process, with each stage representing a year in the time period under consideration. The states at a given stage are the possible ages of the machine entering that stage, i.e., $u = 1, \ldots, 5$. At each stage, the decision variable has only two values, which may be denoted KEEP (retain the current machine) and BUY (replace the current machine with a new machine). Define

$$m_j(u) \equiv \text{the maximum profit to be achieved beginning at stage } j \text{ in state } u$$

$$d_j(u) \equiv \text{the decision at stage } j \text{ that achieves } m_j(u)$$

and let the functions $I(u)$, $M(u)$, and $R(u)$ be defined by Table 19-13. If the company enters stage j with a u-year-old machine and decides to KEEP the machine, it will cost the firm $M(u)$ to maintain the machine, for a yearly profit of $I(u) - M(u)$. The firm will then enter the next stage with a $(u + 1)$-year-old machine, and the best profit it can achieve with it (and its possible successors) is $m_{j+1}(u + 1)$. Thus, the overall profit to completion is

$$I(u) - M(u) + m_{j+1}(u + 1) \tag{1}$$

If instead the company decides to sell the u-year-old machine at stage j and to BUY a new machine, it incurs a replacement cost of $R(u)$. The new machine is 0 years old, so it will generate income $I(0)$ and cost $M(0)$ to maintain. The yearly profit would be $I(0) - M(0) - R(u)$. The firm then enters the next stage with a 1-year-old machine, and the best subsequent profit it can achieve is $m_{j+1}(1)$. In this case, the overall profit to completion is

$$I(0) - M(0) - R(u) + m_{j+1}(1) \tag{2}$$

The optimal decision at stage j produces the larger of the quantities (*1*) and (*2*); that is,

$$m_j(u) = \max\{I(u) - M(u) + m_{j+1}(u + 1), I(0) - M(0) - R(u) + m_{j+1}(1)\} \tag{3}$$

19.9 Solve the problem formulated in Problem 19.8.

We observe that, beginning stage 1 with a 2-year-old machine, it is impossible to enter stage j ($j = 1, \ldots, 4$) with a machine older than $j + 1$ or of age j. Therefore, we will set $m_j(u) = -M$, a very large negative return, whenever $u > j + 1$ or $u = j$.

Stage 4 Formula (*3*) of Problem 14.8 also holds for $j = 4$ if we define $m_5(u) \equiv 0$. Thus,

$$\begin{aligned}
m_4(5) &= \max\{I(5) - M(5), I(0) - M(0) - R(5)\} \\
&= \max\{6100 - 3300, 10\,000 - 100 - 5900\} = 4000 \qquad \text{with} \qquad d_4(5) = \text{BUY} \\
m_4(4) &= -M \\
m_4(3) &= \max\{I(3) - M(3), I(0) - M(0) - R(3)\} \\
&= \max\{8500 - 2000, 10\,000 - 100 - 4900\} = 6500 \qquad \text{with} \qquad d_4(3) = \text{KEEP} \\
m_4(2) &= \max\{I(2) - M(2), I(0) - M(0) - R(2)\} \\
&= \max\{9200 - 800, 10\,000 - 100 - 4200\} = 8400 \qquad \text{with} \qquad d_4(2) = \text{KEEP} \\
m_4(1) &= \max\{I(1) - M(1), I(0) - M(0) - R(1)\} \\
&= \max\{9500 - 400, 10\,000 - 100 - 3500\} = 9100 \qquad \text{with} \qquad d_4(1) = \text{KEEP}
\end{aligned}$$

These results constitute the first two rows of Table 19-14.

The remaining entries in Table 19-14 are obtained by sequential application of the recursion formula for $j = 3, 2, 1$, with returns from impossible states penalized as previously stipulated. It follows from Table 19-14 that the company can achieve a maximum total profit of \$30 900 over the next 4 years, beginning with a 2-year-old machine. To do so, it should keep the current machine for one more year, then buy a new machine and keep it for the remainder of the time period.

19.10 Solve the problem described in Problem 19.8 if the objective is to maximize the total *discounted* profit over the next 4 years under an effective interest rate of 10 percent per annum.

Table 19-14

	u				
	1	2	3	4	5
$m_4(u)$	9100	8400	6500	$-M$	4000
$d_4(u)$	KEEP	KEEP	KEEP	···	BUY
$m_3(u)$	17 500	14 900	$-M$	13 200	$-M$
$d_3(u)$	KEEP	KEEP	···	BUY	···
$m_2(u)$	24 000	$-M$	22 500	$-M$	$-M$
$d_2(u)$	KEEP	···	BUY	···	···
$m_1(u)$	···	30 900	···	···	···
$d_1(u)$	···	KEEP	···	···	···

Without discounting, the recursion formula for the optimal profit is (3) of Problem 19.8. In terms of present values for stage j, the formula becomes

$$m_j(u) = \max\{I(u) - M(u) + \alpha m_{j+1}(u+1),\ I(0) - M(0) - R(u) + \alpha m_{j+1}(1)\} \qquad (1)$$

$$\alpha = \frac{1}{1 + 0.10} = 0.909\,090\,91$$

We solve (1) by the same procedure as employed in Problem 19.9. The solution is presented in Table 19.15. Comparing with Table 19-14, we see that *in this case* discounting has not changed the optimal policy—it is still KEEP, BUY, KEEP, KEEP—but has reduced the optimal profit to \$26 777.

Table 19-15

	u				
	1	2	3	4	5
$m_4(u)$	9100	8400	6500	$-M$	4000
$d_4(u)$	KEEP	KEEP	KEEP	···	BUY
$m_3(u)$	16 736	14 309	$-M$	12 373	$-M$
$d_3(u)$	KEEP	KEEP	···	BUY	···
$m_2(u)$	22 108	$-M$	20 215	$-M$	$-M$
$d_2(u)$	KEEP	···	BUY	···	···
$m_1(u)$	···	26 777	···	···	···
$d_1(u)$	···	KEEP	···	···	···

19.11 Eight bushels of oranges are to be distributed among three stores. The demand for oranges at each store is random, according to the probability distributions shown in Table 19-16. The profit per sold bushel at stores 1, 2, and 3 is \$18, \$20, and \$21, respectively. Determine the number of bushels (constrained to be an integer) that should be allocated to each store to maximize expected total profit.

Table 19-16

	Demand Probabilities		
Bushels	Store 1	Store 2	Store 3
0	0.1	0	0.1
1	0.2	0.2	0.3
2	0.3	0.6	0.2
3	0.2	0	0.2
4	0.1	0.2	0
5	0.1	0	0.2

This is a three-stage decision process, with stage j representing a delivery of oranges to store j. The states for each stage are $u = 0, 1, \ldots, 8$, representing the numbers of bushels available for delivery to a store. There is no randomness in the state resulting from any decision—if 2 bushels are allocated to a store, then that store will stock 2 bushels—but there is randomness in the return from any state. With 2 bushels in stock, a store may sell either 0, 1, or 2 bushels, with each possibility generating a different profit. Consequently, we maximize *expected* total profit rather than total profit. We define

$$f_j(x) \equiv \text{the expected profit from allocating } x \text{ bushels to store } j$$

$$m_j(u) \equiv \text{the maximum expected total profit beginning at stage } j \text{ in state } u$$

$$d_j(u) \equiv \text{the decision taken at stage } j \text{ that achieves } m_j(u)$$

The values of the payoff functions (in dollars) are exhibited in Table 19-17. A typical calculation—say, that of $f_1(3)$—follows: With 3 bushels allocated to it, store 1 makes a profit of \$0 if 0 bushels are sold; \$18 if 1; \$36 if 2; \$54 if 3. The respective probabilities of the first three of these events are, from Table 19-16, 0.1, 0.2, and 0.3. The probability of the fourth event is the probability that the demand will equal or exceed 3 bushels, $0.2 + 0.1 + 0.1 = 0.4$. Thus,

$$f_1(3) = (0)(0.1) + (18)(0.2) + (36)(0.3) + (54)(0.4) = 36$$

In terms of these $f_j(x)$, we have a formally deterministic problem that is covered by the model (*19.1*). Applying the dynamic programming technique, we generate Table 19-18. The optimal policy is to allocate 3 bushels of oranges to store 1, 2 bushels to store 2, and 3 bushels to store 3, for an expected total profit of \$111.90.

Table 19-17

f \ x	0	1	2	3	4	5	6	7	8
$f_1(x)$	0	16.20	28.80	36.00	39.60	41.40	41.40	41.40	41.40
$f_2(x)$	0	20.00	36.00	40.00	44.00	44.00	44.00	44.00	44.00
$f_3(x)$	0	18.90	31.50	39.90	44.10	48.30	48.30	48.30	

Table 19-18

	u								
	0	1	2	3	4	5	6	7	8
$m_3(u)$	0	18.90	31.50	39.90	44.10	48.30	48.30	48.30	48.30
$d_3(u)$	0	1	2	3	4	5	5	5	5
$m_2(u)$	0	20.00	38.90	54.90	67.50	75.90	80.10	84.30	88.30
$d_2(u)$	0	1	1	2	2	2	2	2	3
$m_1(u)$	...	...	...	...	...	...	...	...	111.90
$d_1(u)$	...	...	...	...	...	...	...	...	3

19.12 A person has 3 (thousand-dollar) units of money available for investment in a business opportunity that matures in 1 year. The opportunity is risky in that the return is either double or nothing. Based on past performance, the likelihood of doubling one's money is 0.6, while the chance of losing an investment is 0.4. Determine an investment strategy for the next 4 years that will maximize expected total holdings at the end of that period, if money earned one year can be reinvested in a later year and if investments are restricted to unit amounts.

This is a four-stage process, with each stage representing a year. The states are the amounts available for investment: $u_4 = 0, 1, \ldots, 24$ (the last obtained by investing all available funds each year and having the investment double each time) for stage 4; $u_3 = 0, 1, \ldots, 12$ for stage 3; $u_2 = 0, 1, \ldots, 6$ for stage 2; $u_1 = 3$ for stage 1. Randomness here occurs in the state induced by a particular decision. For example, if one has 3 units (i.e., the present state is 3) and decides to invest 2 units, then the succeeding state is either 5 or 1, depending on whether the invested amount is doubled or is lost. Write

$m_j(u_j) \equiv$ the maximum expected holdings at the end of the process, starting in state u_j at stage j

$d_j(u_j) \equiv$ the amount invested at stage j that achieves $m_j(u_j)$

If one enters stage j with u_j units, then x units ($x = 0, 1, \ldots, u_j$) may be invested, leaving $u_j - x$ units in reserve. If the invested amount doubles, there will be

$$2x + (u_j - x) = u_j + x$$

units available for the next stage; if the invested units are lost, then only the reserve of $(u_j - x)$ units will be available for the next stage. The best return from that point is either $m_{j+1}(u_j + x)$ or $m_{j+1}(u_j - x)$, the expected value of this best return being

$$0.6m_{j+1}(u_j + x) + 0.4m_{j+1}(u_j - x)$$

The optimal choice for x is that amount which maximizes the above expression:

$$m_j(u_j) = \underset{x=0,1,\ldots,u_j}{\text{maximum}} \left[0.6m_{j+1}(u_j + x) + 0.4m_{j+1}(u_j - x)\right] \qquad (I)$$

Equation (I), the recursion formula for the process, holds for $j = 1, 2, 3$; it also holds for $j = 4$, under the end condition $m_5(u) \equiv u$. It is obvious that since m_5 is a linear, increasing function, so are $m_4, \ldots, m_1$. Indeed,

carrying out the maximization in (*1*), we readily obtain

$$m_4(u_4) = 1.2u_4 \qquad m_3(u_3) = (1.2)^2u_3 \qquad m_2(u_2) = (1.2)^3u_2 \qquad m_1(u_1) = (1.2)^4u_1$$

with $d_j(u_j) = u_j$ ($j = 4, 3, 2, 1$). Thus the optimal expected holding is

$$m_1(3) = (1.2)^4(3) = 6.2208 \text{ units}$$

obtained by investing all available units each year of the process. Note that such an optimal policy results in either 48 units or 0 units at the end of 4 years, depending on whether all investments double or one investment is completely lost. Nonetheless, the *expected* return under that policy is

$$(48)(0.6)^4 + (0)[1 - (0.6)^4] = 6.2208 \text{ units}$$

where $(0.6)^4$ is the probability that all four investments are successful and $1 - (0.6)^4$ is the probability that at least one investment fails.

19.13 Solve Problem 19.12 if the objective is to maximize the probability of accumulating holdings of at least 5 (thousand-dollar) units after 4 years.

This problem deals not with the *expected value* of the return but rather with the *probability* that the return is of a certain size. For example, if the investor adopts the policy of investing all available units at each stage, then, as was shown in Problem 19.12, the probability that he or she ends up with 5 or more units is $(0.6)^4 = 0.1296$. The question is: can that value be bettered by another choice of policy?

The states and stages are as defined in Problem 19.12. Write

E = the event of finishing the process with 5 or more units

$m_j(u_j)$ = the probability of E given that the state at stage j is u_j and an optimal policy is followed from stage j onwards

$d_j(u_j)$ = the amount invested at stage j that achieves $m_j(u_j)$

If x units ($x = 0, 1, \ldots, u_j$) are invested at stage j, then, as in Problem 19.12,

$$P(u_{j+1} = u_j + x) = 0.6 \qquad P(u_{j+1} = u_j - x) = 0.4$$

By the rules of conditional probabilities [(*3*) of Problem 18.5, with H_1 = "double" and H_2 = "nothing"], the expression

$$0.6m_{j+1}(u_j + x) + 0.4m_{j+1}(u_j - x)$$

represents the probability of E given u_j, the decision x, and an optimal continuation from stage $j + 1$. Hence,

$$m_j(u_j) = \underset{x=0,1,\ldots,u_j}{\text{maximum}} [0.6m_{j+1}(u_j + x) + 0.4m_{j+1}(u_j - x)] \tag{1}$$

for $j = 1, 2, 3$. Formally, this is identical to the difference equation obtained in Problem 19.12, however, a new end condition applies.

Conditioning on the outcome of the final investment decision, we have

$$\begin{aligned} m_4(u_4) &= \underset{x=0,1,\ldots,u_4}{\text{maximum}} [0.6P(u_4 + x \geq 5) + 0.4P(u_4 - x \geq 5)] \\ &\equiv \max_x [F + G] \end{aligned} \tag{2}$$

With the aid of Fig. 19-1, we carry out the maximization in (*2*), obtaining

$$m_4(u_4) = \begin{cases} 0 & u_4 = 0, 1, 2 \\ 0.6 & u_4 = 3, 4 \\ 1 & u_4 = 5, 6, \ldots, 24 \end{cases} \qquad \text{with} \qquad d_4(u_4) = \begin{cases} 0 & u_4 = 0, 1, 2 \\ 2 & u_4 = 3 \\ 1 & u_4 = 4 \\ 0 & u_4 = 5, 6, \ldots, 24 \end{cases} \tag{3}$$

where the *smallest* optimal investment $d_4(u_4)$ has been indicated.

Table 19-19 presents the solution of (*1*) subject to the end condition (*3*). Again, only the smallest $d_j(u_j)$ is listed in the event of a tie. It is seen that the maximum probability for accumulating at least 5 units of money in 4 years is 0.7056. A policy table, of the form of Table 19.2, for realizing this maximum probability

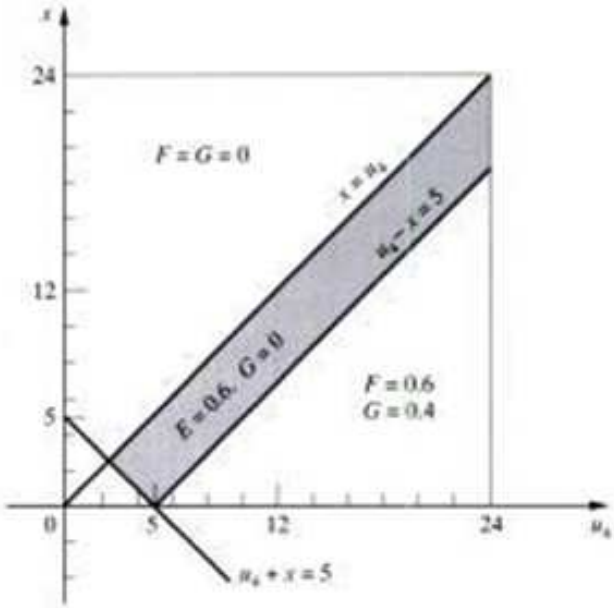

Fig. 19-1

may be composed by extracting rows 8, 4, 6, and 2 of Table 19-19. Either table shows that under this particular optimal policy the investor finishes with 0, 1, or 5 units, the probability of the last event being 0.7056. Alternative optimal policies exist which allow the investor to accumulate more than 5 units, but always with a probability of 0.7056 for 5 or more units.

Table 19-19

	0	1	2	3	4	5	6	···	12	···	24
$m_4(u_4)$	0	0	0	0.6	0.6	1	1	···	1	···	1
$d_4(u_4)$	0	0	0	2	1	0	0	···	0	···	0
$m_3(u_3)$	0	0	0.36	0.6	0.84	1	1	···	1		
$d_3(u_3)$	0	0	1	0	1	0	0	···	0		
$m_2(u_2)$	0	0.216	0.504	0.648	0.84	1	1				
$d_2(u_2)$	0	1	2	1	0	0	0				
$m_1(u_1)$	···	···	···	0.7056							
$d_1(u_1)$	···	···	···	1							

19.14 The manufacturer of a space shuttle for NASA has the capability to produce at most two shuttles each year. It takes a full year to manufacture a shuttle, but since orders are not placed by NASA until July, for delivery in December, the manufacturer must set the production schedule prior to knowing the exact demand. This demand will be for either one shuttle, with probability 0.6, or two shuttles, with probability 0.4. Any shuttle ordered but not delivered incurs a penalty cost of 1.5 million dollars and must be delivered the following year, taking priority over any new orders in the future. Production costs are a function of the number of shuttles made, with the cost of one shuttle set at 10 million dollars and the cost of two shuttles set at 19 million dollars. Overproduction can be stored for future delivery, at a cost of 1.1 million dollars per shuttle per

year, and is limited by company policy to a maximum of 1 shuttle. Determine a production schedule for the next 3 years that will minimize expected total cost, if the current inventory is zero shuttles.

We view this as a four-stage process, with stages 1, 2, and 3 representing the next 3 years in the planning horizon, respectively, and stage 4 representing the delayed production of those shuttles ordered in year 3 but not delivered. The states are the possible inventories at the beginning of a stage: they range from a low of -2 (signifying two shuttles ordered but not delivered) to a high of 1. We set

$u \equiv$ the number of shuttles in inventory ($u = -2, -1, 0, 1$)

$m_j(u) \equiv$ the minimum expected cost for completing the process beginning at stage j in state u

$d_j(u) \equiv$ the production in stage j that achieves $m_j(u)$

$D \equiv$ the yearly demand $[P(D = 1) = 0.6,\ P(D = 2) = 0.4]$

$f(x) \equiv$ the cost of producing x shuttles in 1 year

If the firm enters stage j ($j = 1, 2, 3$) with $u = 0, 1$ shuttles in inventory and decides to produce x additional shuttles ($x = 0, 1, 2$) in that stage, it incurs a carrying charge of $1.1u$ on its inventory and a production cost $f(x)$ for the new shuttles, for a yearly expenditure of

$$f(x) + 1.1u \tag{1}$$

The total number of shuttles available for delivery at the end of the year is $u + x$, which leaves $u + x - D$ shuttles in inventory for the following stage. The minimum cost of completing the process from that point is $m_{j+1}(u + x - D)$. Since $D = 1$ with probability 0.6 and $D = 2$ with probability 0.4, the minimum expected cost to completion beginning with stage $j + 1$ is

$$0.6m_{j+1}(u + x - 1) + 0.4m_{j+1}(u + x - 2) \tag{2}$$

Therefore, the minimum expected cost to completion from stage j is the minimum, with respect to x, of the sum of (1) and (2):

$$m_j(u) = 1.1u + \min_{x=0,1,2} [f(x) + 0.6m_{j+1}(u + x - 1) + 0.4m_{j+1}(u + x - 2)] \tag{3}$$

for $u = 0, 1$ and $j = 1, 2, 3$. Here we agree that $m_j(3) \equiv +M$ for all j.

If the firm enters stage j with $u = -2$ or $u = -1$, then it had a shortfall of $-u$ shuttles from the previous stage and is subject to a penalty cost of $-1.5u$. A decision to produce x shuttles, where x must be at least as great as $-u$ to satisfy the previous shortfall, results in a production cost of $f(x)$. The resulting cost to the company in stage j is

$$f(x) - 1.5u \tag{4}$$

Continuing the analysis as in the case $u = 0, 1$, we obtain the recursion formula

$$m_j(u) = -1.5u + \min_{x=-u,\ldots,2} [f(x) + 0.6m_{j+1}(u + x - 1) + 0.4m_{j+1}(u + x - 2)] \tag{5}$$

for $u = -2, -1$ and $j = 1, 2, 3$. We can replace (3) and (5) by the single relation

$$m_j(u) = g(u) + \min_{x=-u,\ldots,2} [f(x) + 0.6m_{j+1}(u + x - 1) + 0.4m_{j+1}(u + x - 2)] \tag{6}$$

for $u = -2, \ldots, 1$ and $j = 1, 2, 3$, provided we define

$$g(u) \equiv \begin{cases} 1.1u & u \geq 0 \\ -1.5u & u < 0 \end{cases} \qquad \text{and} \qquad f(-1) \equiv +M$$

The stepwise solution of (6), extended to $j = 4$ with the end condition $m_5(u) \equiv 0$, is given in Table 19-20. The minimum expected cost is 42.24 million dollars, achieved by the optimal policy shown in Table 19-21.

Table 19-20

	u			
	-2	-1	0	1
$m_4(u)$	22	11.5	0	1.1
$d_4(u)$	2	1	0	0
$m_3(u)$	37.7	25.1	14.6	5.7
$d_3(u)$	2	2	1	0
$m_2(u)$	52.14	39.3	28.26	19.9
$d_2(u)$	2	2	2	0
$m_1(u)$	...	...	42.24	...
$d_1(u)$	...	...	2	...

Table 19-21

Inventory levels

Years	-2	-1	0	1
1	...	...	2	...
2	2	2	2	0
3	2	2	1	0
4	2	1	0	0

19.15 A Presidential nominee has reduced the field of possible Vice Presidential running mates to three people. Each of these candidates has been rated on a scale from 1 (lowest) to 10 (highest); person 1 received 10 points, person 2 received 8 points, and person 3 received 5 points. The probability of person i ($i = 1, 2, 3$) accepting the jth ($j = 1, 2, 3$) offer to run for Vice President (assuming the first $j - 1$ offers, to other people, were declined) is denoted by p_{ij}, where

$$p_{11} = 0.5 \qquad p_{12} = 0.2 \qquad p_{13} = 0$$
$$p_{21} = 0.9 \qquad p_{22} = 0.5 \qquad p_{23} = 0.2$$
$$p_{31} = 1 \qquad p_{32} = 0.8 \qquad p_{33} = 0.4$$

In what order should the three potential running mates be offered the Vice Presidential nomination if the Presidential nominee wants to maximize the expected number of points?

It is assumed that no person is asked more than once, and that each time a candidate declines, another is asked, until either one candidate accepts or all have declined. We then have a three-stage process, with stage j representing the jth position in the asking order. We take the states to be the *sets of people still unasked.* Stage 1 then has the single state

$$U_{11} = \{1, 2, 3\}$$

stage 2 has the three states

$$U_{21} = \{1, 2\} \qquad U_{22} = \{1, 3\} \qquad U_{23} = \{2, 3\}$$

and stage 3 has the three states

$$U_{31} = \{1\} \qquad U_{32} = \{2\} \qquad U_{33}\{3\}$$

We set

$m_j(U_{jk}) \equiv$ the maximum expected number of points achievable starting at stage j in state U_{jk}, given that there was no acceptance in previous stages

$d_j(U_{jk}) \equiv$ the person to ask in stage j in order to achieve $m_j(U_{jk})$

$V_i \equiv$ the point-value of person i

For this problem, the recursion formula is

$$m_j(U_{jk}) = \max_{i \in U_{jk}} [V_i p_{ij} + (1 - p_{ij}) m_{j+1}(U_{jk} - \{i\})] \qquad (I)$$

that is, if in stage j person i is asked and accepts, the payoff is V_i; whereas, if that individual declines, the best continuation is from the state consisting of the remaining unasked persons. Formula (I) holds for $j = 1, 2, 3$ if we define $m_4(U) \equiv 0$. It is seen that the present problem is a stochastic version of Problem 19.25.

Stage 3

$$m_3(U_{31}) = 10(0) = 0 \qquad \text{with} \qquad d_3(U_{31}) = 1$$
$$m_3(U_{32}) = 8(0.2) = 1.6 \qquad \text{with} \qquad d_3(U_{32}) = 2$$
$$m_3(U_{33}) = 5(0.4) = 2.0 \qquad \text{with} \qquad d_3(U_{33}) = 3$$

Stage 2

$$\begin{aligned}
m_2(U_{21}) &= \max\{10(0.2) + (1 - 0.2)m_3(U_{32}), 8(0.5) + (1 - 0.5)m_3(U_{31})\} \\
&= \max\{2 + (0.8)(1.6), 4 + (0.5)(0)\} = 4 \qquad \text{with} \qquad d_2(U_{21}) = 2 \\
m_2(U_{22}) &= \max\{10(0.2) + (1 - 0.2)m_3(U_{33}), 5(0.8) + (1 - 0.8)m_3(U_{31})\} \\
&= \max\{2 + (0.8)(2.0), 4 + (0.2)(0)\} = 4 \qquad \text{with} \qquad d_2(U_{22}) = 3 \\
m_2(U_{23}) &= \max\{8(0.5) + (1 - 0.5)m_3(U_{33}), 5(0.8) + (1 - 0.8)m_3(U_{32})\} \\
&= \max\{4 + (0.5)(2), 4 + (0.2)(1.6)\} = 5 \qquad \text{with} \qquad d_2(U_{23}) = 2
\end{aligned}$$

Stage 1

$$\begin{aligned}
m_1(U_{13}) &= \max\{10(0.5) + (1 - 0.5)m_2(U_{23}), 8(0.9) + (1 - 0.9)m_2(U_{22}), 5(1) + (1 - 1)m_2(U_{21})\} \\
&= \max\{5 + (0.5)(5), 7.2 + (0.1)(4), 5 + 0(4)\} \\
&= 7.6 \qquad \text{with} \qquad d_1(U_{13}) = 2
\end{aligned}$$

The optimal policy is to ask person 2 first; if that person declines, then to ask person 3 $[d_2(U_{22}) = 3]$; and if that person declines, then to ask person 1. The expected number of points from such a policy is 7.6.

Supplementary Problems

19.16 David Jeremy, a certified public accountant, has offers from three different clients for his services. Each client would like Mr. Jeremy to work for him on a full-time basis; however, each client is willing to employ Mr. Jeremy for as many days of the week as he is prepared to give, for the fees shown in Table 19-22. How many days should Mr. Jeremy devote to each client to maximize his weekly income?

Table 19-22

Number of Days	Client 1, \$	Client 2, \$	Client 3, \$
0	0	0	0
1	100	125	150
2	250	250	300
3	400	375	400
4	525	500	550
5	600	625	650

19.17 Redo Problem 19.16 under the additional constraint that Mr. Jeremy work at least 1 day per week for each client. (*Hint*: Penalize the possibility of working 0 days for any client.)

19.18 A cargo barge capable of transporting up to 10 tons of material has requests from four companies to carry their merchandise from St. Louis to New Orleans. Each company can supply as much merchandise as the barge captain is willing to accept. The merchandise must be shipped in unit amounts; Table 19.23 gives the shipping fees.

Table 19-23

Company	Weight of Merchandise, tons/item	Shipping Fee, \$/item
I	1	10
II	2	25
III	3	45
IV	4	60

How many items of each company's merchandise should the barge captain accept to maximize the total shipping fees without exceeding the barge's capacity?

19.19 Use dynamic programming to solve Problem 1.16, under the additional constraint that games be produced in whole numbers. (*Hint*: Count time in half-hour units.)

19.20

$$\begin{aligned} \text{maximize:} \quad & z = 5x_1^2 + 5x_2^2 + 3x_3 \\ \text{subject to:} \quad & 3x_1 + 4x_2 + x_3 \le 11 \\ \text{with:} \quad & \text{all variables nonnegative and integral} \end{aligned}$$

19.21 Use dynamic programming to solve Problem 1.8.

19.22 Use dynamic programming to solve Problem 9.10.

19.23 Obtain a recursion formula for, and then solve, the problem described in Problem 19.8, if, in addition to either keeping the current machine or buying a new model, the company may also purchase a used machine younger than its current model. Take the cost of replacing a u-year-old machine by an x-year-old machine to be the difference between the costs of their replacement by a new machine. For example, the cost of replacing a 3-year-old machine by a 1-year-old machine is \$4900 − \$3500 = \$1400.

19.24 *Establish a recursion formula for, and then solve, the following problem.* A small construction company currently has a 1-year-old dump truck. Estimates of its upkeep, replacement costs, and the revenues it can be expected to generate, together with similar data for new trucks that may be purchased in the future, are given in Table 19-24; all amounts are in units of \$1000. Trucks are never kept more than 3 years, and replacements are only with new models. Determine a maximum-profit replacement policy for this company over the next 5 years.

Table 19-24

	Age	Revenue	Upkeep	Replacement
Current Model	1	20	8	18
	2	17	11	25
	3	...	...	35
New Model	0	21	1	6
	1	20	8	19
	2	17	11	26
	3	...	...	36
Next Year's Model	0	21	1	6
	1	17	7	18
	2	15	12	26
	3	...	...	36
Model Two Years Hence	0	22	2	7
	1	19	8	19
	2	17	12	24
	3	...	...	37
Model Three Years Hence	0	24	3	6
	1	18	4	12
	2	15	11	27
	3	...	...	37
Model Four Years Hence	0	25	3	6
	1	19	5	13
	2	14	10	27
	3	...	...	38

19.25 Solve the 3×3 assignment problem, with cost matrix

		Jobs		
		1	2	3
Workers	1	c_{11}	c_{12}	c_{13}
	2	c_{21}	c_{22}	c_{23}
	3	c_{31}	c_{32}	c_{33}

(see Chapter 9), by dynamic programming. For larger matrices, would this approach rival the Hungarian method?

19.26 Solve Problem 19.7 with discounting, if the effective interest rate is 7 percent per annum.

19.27 Solve Problem 19.23 with discounting, if the effective interest rate is 8 percent per annum.

19.28 Solve Problem 19.11 with the additional consideration that any unsold oranges spoil, resulting in a loss of \$15 per bushel.

19.29 A person has \$2000 available for investment and two opportunities, A and B. Both opportunities are risky; the possible yearly returns per each \$1000 invested and the probabilities of realizing these returns are given in Table 19-25.

Table 19-25

	Return, $	Probability
A	3000	0.4
	0	0.6
B	2000	0.2
	1000	0.8

Determine an investment strategy for the next 3 years that will maximize expected final holdings, if the person is restricted to either one $1000 investment or a zero investment each year.

19.30 Solve Problem 19.29 if the objective is to maximize the probability of accumulating at least $5000 after 3 years.

19.31 An oil company has 8 units of money available for exploration of three sites. If oil is present at a site, the probability of finding it is a function of the funds allocated for exploring the site, as detailed in Table 19-26.

Table 19-26

	Units Allocated								
	0	1	2	3	4	5	6	7	8
Site 1	0	0	0.1	0.2	0.3	0.5	0.7	0.9	1
Site 2	0	0.1	0.2	0.3	0.4	0.6	0.7	0.8	1
Site 3	0	0.1	0.1	0.2	0.3	0.5	0.8	0.9	1

The probabilities that oil exists at the sites are 0.4, 0.3, and 0.2, respectively. How much money should be allocated to exploration of each site to maximize the probability of discovering oil?

19.32 A department manager has 4 weeks to complete a project that requires 10 units of work. The department has six people who can be assigned to the project each week. The costs (in thousand-dollar units) and the work that can be accomplished depend on the number of people assigned to the project each week, as follows:

People Assigned	0	1	2	3	4	5	6
Work Units Completed	0	2	4	6	7	9	10
Cost	0	1	2	4	8	16	32

Once assignments are made for the week, the Vice President for Operations may transfer people to jobs outside of the department. This happens often enough that the department manager must take the possibility into account in allocating personnel. Although the vice president never pulls everyone from a project, there is a 20 percent chance of losing one person whenever two or more are assigned to the same project, and a 10 percent chance of losing two people if three or more are assigned to a project. Any person transferred from the department for the week is not charged against the department, and returns to the department at the end of the week. Detemine an optimal policy for assigning people to this one project over the next

4 weeks that will minimize expected total cost to the department yet guarantee that the project will be completed on time.

19.33 A manufacturing firm has placed an order for a new production facility that will be installed in 4 years. Until that time, it must use the current facility, which includes a particularly troublesome machine. Each year a decision is made whether to keep the existing machine in the facility or to replace it with a new model. The cost data for such machines are as follows: (1) A u-year-old machine costs $(500 + 10u^2)$ dollars to operate for one year. (2) An operable u-year-old machine has a salvage value of $(200 - 30u)$ dollars; an inoperable machine has no salvage value. (3) The cost of a new machine j years in the future is $(300 + 100j)$ dollars. (4) The probability that a machine will experience a catastrophic failure which is beyond repair is 0.75, regardless of the age of the machine. It is assumed that a catastrophe can occur only at the very end of the year.

Determine an optimal replacement policy for this piece of equipment over the next 4 years if the current machine is 1 year old.

19.34 A computer firm has the capability to manufacture as many as four computers each week. The demand for computers is variable, being governed by the probability distributions given in Table 19-27.

Table 19-27

Demand

Weeks	0	1	2	3	4	5
1	0	0.1	0.2	0.5	0.2	0
2	0	0.1	0.1	0.2	0.5	0.1
3	0.1	0.2	0.4	0.2	0.1	0

Production costs are a function of the number of computers manufactured and are given (in thousands of dollars) as follows:

Units Produced	0	1	2	3	4
Cost	0	18	30	42	56

Computers can be delivered to customers at the end of the week of manufacture, or they can be stored for future delivery at a cost of \$4000 per computer per week. Orders that are not filled during the week they are placed incur a penalty cost of \$2000 per computer per week and must be filled as soon as possible during the following weeks. How many computers should the firm produce in the next 3 weeks to minimize expected total cost of satisfying demand, if the current inventory is zero?

19.35 An electronic system consists of three components in series. The components function independently of one another, and each component must function if the system as a whole is to function. The *reliability* of the system (the probability that it will function) can be improved by installing several parallel units in one or more of the components. The probability that a component will function depends on the number of parallel units installed, according to Table 19-28.

The cost for each unit is \$100 for component 1, \$200 for component 2, and \$300 for component 3. Determine how many units of each component should be designed into the system to maximize the reliability, if the cost of the components is not to exceed \$1000. (*Hint*: This problem is deterministic, despite the fact that the return is a probability. Choose as the objective function the logarithm of the reliability, and take as the state at stage j the number of hundred-dollar cost units that may be spent for units of component j.)

Table 19-28

	Units in Parallel				
	1	2	3	4	5
Component 1	0.40	0.64	0.78	0.87	0.92
Component 2	0.50	0.75	0.88	0.94	0.97
Component 3	0.60	0.84	0.94	0.97	0.99

19.36 A contractor needs three different components to complete a project by its due date. Three subcontractors are available to manufacture each of these components. The probability that a subcontractor will deliver an ordered component by the due date is listed in Table 19-29.

Table 19-29

	Component 1	Component 2	Component 3
Subcontractor 1	0.83	0.92	0.91
Subcontractor 2	0.89	0.83	0.85
Subcontractor 3	0.91	0.93	0.93

Determine an optimal assignment policy that will maximize the probability of all components being delivered by the due date, if no subcontractor can be awarded more than one job. (*Hint*: Maximize the logarithm of the probability, proceeding as in Problem 19-25.)

19.37 *Determine a recursion formula for the following problem.* A physician wishes to raise a patient's level of a particular antibody at least 6 units over a 4-day period by prescribing pills for the patient to take each evening. The actual amount of antibody absorbed by the patient, which is a function of the number of pills taken, is limited to a maximum of 3 units per day. The absorption rates, along with the probabilities that the patient will experience a reaction severe enough to keep him from work the following day, are given in Table 19-30. Determine a dosage schedule for the patient that will achieve the prescribed level of antibody with the minimum expected number of workdays lost.

Table 19-30

Daily Dosage of Pills	0	1	2	3	4	5	6	7
Units of Antibody Absorbed	0	0.9	1.7	2.4	2.9	3.0	3.0	3.0
Probability of Missing Work the Next Day	0	0.05	0.15	0.30	0.50	0.70	0.95	1

19.38 *Determine a recursion formula for the following problem.* A contractor has two projects that must be completed in 5 days. Project 1 still requires 16 units of work and project 2 needs 23 units of work. The contractor employs five crews full-time, at a cost of \$1000 per day per crew, and, at any time, can subcontract work to outside crews at a cost of \$1500 per day per crew. The units of work accomplished on each project are a function of the number of crews assigned to the project, as shown in Table 19-31. Crew schedules are set

each evening for the next day, and always include assignments for all five of the contractor's own crews. However, 10 percent of the time, one of the contractor's crews will call in sick the following day, in which event that crew is not paid for the day. Subcontracted crews are never sick. Project 1 has priority; so that if a crew calls in sick, project 1 is still guaranteed its assignment of contractor's crews, *unless* that assignment was five. In that case, project 1 receives only four contractor's crews. No more than six crews are ever assigned to a single project on any day, and once a crew arrives at a project it stays there for the entire day. How may the contractor complete both projects in the prescribed time at minimum expected cost?

Table 19-31

Number of Crews Assigned	0	1	2	3	4	5	6
Work Completed, Project 1	0	1	1.9	2.7	3.5	4.2	5.0
Work Completed, Project 2	0	1	1.9	2.8	3.7	4.5	5.2

19.39 *Obtain the recursion formula for the following problem.* A Presidential candidate for a major-party nomination needs 100 electoral votes to clinch the nomination. There are five winner-take-all primaries remaining, and the candidate has 10 units of money available to spend on them. The probability of winning a primary is a function of the money spent on it, as shown in Table 19-32.

Table 19-32

	Units of Money Spent							
	0	1	2	3	4	5	6	7
Primary 1	0.10	0.15	0.25	0.38	0.44	0.48	0.54	0.60
Primary 2	0.15	0.21	0.27	0.40	0.45	0.51	0.56	0.61
Primary 3	0.05	0.12	0.17	0.22	0.27	0.31	0.35	0.38
Primary 4	0.20	0.25	0.31	0.38	0.45	0.52	0.59	0.67
Primary 5	0.17	0.22	0.29	0.30	0.38	0.44	0.51	0.55

The probability of winning any primary does not increase if more than 7 units of money are allocated to it. There are 89 votes at stake in primary 1, 69 votes in primary 2, 52 votes in primary 3, 38 votes in primary 4, and 21 votes in primary 5. Determine a policy for maximizing the candidate's chances of winning at least 100 votes.

Chapter 20

Finite Markov Chains

MARKOV PROCESSES

A *Markov process* consists of a set of objects and a set of states such that

(i) at any given time each object must be in a state (distinct objects need not be in distinct states);

(ii) the probability that an object moves from one state to another state (which may be the same as the first state) in one time period depends only on those two states.

The integral numbers of time periods past the moment when the process is started represent the stages of the process, which may be finite or infinite. If the number of states is finite or countably infinite, the Markov process is a *Markov chain*. A finite Markov chain is one having a finite number of states.

We denote the probability of moving from state i to state j in one time period by p_{ij}. For an N-state Markov chain (where N is a fixed positive integer), the $N \times N$ matrix $\mathbf{P} = [p_{ij}]$ is the *stochastic* or *transition matrix* associated with the process. Necessarily, the elements of each row of $\mathbf{P}$ sum to unity. Furthermore,

Theorem 20.1: Every stochastic matrix has 1 as an eigenvalue (possibly multiple), and none of the eigenvalues exceeds 1 in absolute value.

(See Problems 20.14 and 20.32.) Because of the way $\mathbf{P}$ is defined, it proves convenient in this chapter to indicate N-dimensional vectors as row vectors, with matrices operating on them from the right. According to Theorem 20.1, there exists a vector $\mathbf{X} \neq \mathbf{0}$ such that

$$\mathbf{XP} = \mathbf{X}$$

This left eigenvector is called a *fixed point* of $\mathbf{P}$.

Example 20.1 Census data divide households into economically stable and economically depressed populations. Over a 10-year period the probability of a stable household remaining stable is 0.92, while the probability of a stable household becoming depressed is 0.08. The probability of a depressed household becoming stable is 0.03, while the probability of a depressed household remaining depressed is 0.97.

If we designate economic stability as state 1 and economic depression as state 2, then we can model this process with a two-state Markov chain, having the transition matrix

$$\mathbf{P} = \begin{bmatrix} 0.92 & 0.08 \\ 0.03 & 0.97 \end{bmatrix}$$

POWERS OF STOCHASTIC MATRICES

Denote the nth power of a matrix $\mathbf{P}$ by $\mathbf{P}^n \equiv [p_{ij}^{(n)}]$. If $\mathbf{P}$ is stochastic, then $p_{ij}^{(n)}$ represents the probability that an object moves from state i to state j in n time periods. (See Problem 20.12.) It follows that $\mathbf{P}^n$ is also a stochastic matrix.

Denote the proportion of objects in state i at the end of the nth time period by $x_i^{(n)}$, and designate

$$\mathbf{X}^{(n)} \equiv [x_1^{(n)}, x_2^{(n)}, \ldots, x_N^{(n)}]$$

the *distribution vector* for the end of the nth time period. Accordingly,

$$\mathbf{X}^{(0)} = [x_1^{(0)}, x_2^{(0)}, \ldots, x_N^{(0)}]$$

represents the proportion of objects in each state at the beginning of the process. $\mathbf{X}^{(n)}$ is related to $\mathbf{X}^{(0)}$ by the equation

$$\mathbf{X}^{(n)} = \mathbf{X}^{(0)}\mathbf{P}^n \tag{20.1}$$

(See Problems 20.6 and 20.7.) In writing (*20.1*), we implicitly identify the probability p_{ij} with the proportion of objects in state i that make the transition to state j in one time period.

ERGODIC MATRICES

A stochastic matrix $\mathbf{P}$ is *ergodic* if $\lim_{n\to\infty} \mathbf{P}^n$ exists; that is, if each $p_{ij}^{(n)}$ has a limit as $n \to \infty$. We denote the limit matrix, necessarily a stochastic matrix, by $\mathbf{L}$. The components of $\mathbf{X}^{(\infty)}$, defined by the equation

$$\mathbf{X}^{(\infty)} = \mathbf{X}^{(0)}\mathbf{L} \tag{20.2}$$

are the *limiting state distributions* and represent the approximate proportions of objects in the various states of a Markov chain after a large number of time periods. (See Problems 20.6, 20.8, and 20.9.)

Theorem 20.2: A stochastic matrix is ergodic if and only if the only eigenvalue λ of magnitude 1 is 1 itself and, if $\lambda = 1$ has multiplicity k, there exist k linearly independent (left) eigenvectors associated with this eigenvalue.

(See Problem 20.5.)

Theorem 20.3: If *every* eigenvalue of a matrix $\mathbf{P}$ yields linearly independent (left) eigenvectors in number equal to its multiplicity, then there exists a nonsingular matrix $\mathbf{M}$, whose rows are left eigenvectors of $\mathbf{P}$, such that $\mathbf{D} \equiv \mathbf{MPM}^{-1}$ is a diagonal matrix. The diagonal elements of $\mathbf{D}$ are the eigenvalues of $\mathbf{P}$, repeated according to multiplicity.

(See Problem 20.33.) We adopt the convention of positioning the eigenvectors corresponding to $\lambda = 1$ above all other eigenvectors in $\mathbf{M}$. Then, for a diagonalizable, ergodic, $N \times N$ matrix $\mathbf{P}$ with $\lambda = 1$ of multiplicity k, the limit matrix $\mathbf{L}$ may be calculated as

$$\mathbf{L} = \mathbf{M}^{-1}(\lim_{n\to\infty} \mathbf{D}^n)\mathbf{M} = \mathbf{M}^{-1}\begin{bmatrix} 1 & & & & & & \\ & 1 & & & & & \\ & & \ddots & & & & \\ & & & 1 & & & \\ & & & & 0 & & \\ & & & & & \ddots & \\ & & & & & & 0 \end{bmatrix}\mathbf{M} \tag{20.3}$$

The diagonal matrix on the right has k 1's and $(N - k)$ 0's on the main diagonal. (See Problem 20.5.)

REGULAR MATRICES

A stochastic matrix is *regular* if one of its powers contains only positive elements. (See Problems 20.3 and 20.4.)

Theorem 20.4: If a stochastic matrix is regular, then 1 is an eigenvalue of multiplicity one, and all other eigenvalues λ_i satisfy $|\lambda_i| < 1$.

Theorem 20.5: A regular matrix is ergodic.

If $\mathbf{P}$ is regular, with limit matrix $\mathbf{L}$, then the rows of $\mathbf{L}$ are identical with one another, each being the unique left eigenvector of $\mathbf{P}$ associated with the eigenvalue $\lambda = 1$ and having the sum of its components equal to unity. (See Problem 20.13.) Denote this eigenvector by $\mathbf{E}_1$. It follows directly from (*20.2*) that if $\mathbf{P}$ is regular, then, regardless of the initial distribution $\mathbf{X}^{(0)}$,

$$\mathbf{X}^{(\infty)} = \mathbf{E}_1 \tag{20.4}$$

(See Problems 20.6, 20.7, and 20.11.)

Solved Problems

20.1 *Formulate the following process as a Markov chain.* The manufacturer of Hi-Glo toothpaste currently controls 60 percent of the market in a particular city. Data from the previous year show that 88 percent of Hi-Glo's customers remained loyal to Hi-Glo, while 12 percent of Hi-Glo's customers switched to rival brands. In addition, 85 percent of the competition's customers remained loyal to the competition, while the other 15 percent switched to Hi-Glo. Assuming that these trends continue, determine Hi-Glo's share of the market (*a*) in 5 years and (*b*) over the long run.

We take state 1 to be consumption of Hi-Glo toothpaste and state 2 to be consumption of a rival brand. Then p_{11}, the probability that a Hi-Glo consumer remains loyal to Hi-Glo, is 0.88; p_{12}, the probability that a Hi-Glo consumer switches to another brand, is 0.12; p_{21}, the probability that the consumer of another brand switches to Hi-Glo, is 0.15; and p_{22}, the probability that the consumer of another brand remains loyal to the competition, is 0.85. The stochastic matrix defined by these transition probabilities is

$$\mathbf{P} = \begin{bmatrix} 0.88 & 0.12 \\ 0.15 & 0.85 \end{bmatrix}$$

The initial probability distribution vector is $\mathbf{X}^{(0)} = [0.60, 0.40]$, where the components $x_1^{(0)} = 0.60$ and $x_2^{(0)} = 0.40$ represent the proportions of people initially in states 1 and 2, respectively.

20.2 *Formulate the following process as a Markov chain.* The training program for production supervisors at a particular company consists of two phases. Phase 1, which involves 3 weeks of classroom work, is followed by phase 2, which is a 3-week apprenticeship program under the direction of working supervisors. From past experience, the company expects only 60 percent of those beginning classroom training to be graduated into the apprenticeship phase, with the remaining 40 percent dropped completely from the training program. Of those who make it to the apprenticeship phase, 70 percent are graduated as supervisors, 10 percent are asked to repeat the second phase, and 20 percent are dropped completely from the program. How many supervisors can the company expect from its current training program if it has 45 people in the classroom phase and 21 people in the apprenticeship phase?

We consider one time period to be 3 weeks and define states 1 through 4 as the conditions of being dropped, a classroom trainee, an apprentice, and a supervisor, respectively. If we assume that discharged

individuals never reenter the training program and that supervisors remain supervisors, then the transition probabilities are given by the stochastic matrix

$$\mathbf{P} = \begin{bmatrix} 1 & 0 & 0 & 0 \\ 0.4 & 0 & 0.6 & 0 \\ 0.2 & 0 & 0.1 & 0.7 \\ 0 & 0 & 0 & 1 \end{bmatrix}$$

There are $45 + 21 = 66$ people in the training program currently, so the initial probability vector is

$$\mathbf{X}^{(0)} = [0, 45/66, 21/66, 0]$$

20.3 Is the stochastic matrix

$$\mathbf{P} = \begin{bmatrix} 0.88 & 0.12 \\ 0.15 & 0.85 \end{bmatrix}$$

regular? ergodic? Calculate $\mathbf{L} = \lim_{n\to\infty} \mathbf{P}^n$, if it exists.

Since each entry of the first power of $\mathbf{P}$ ($\mathbf{P}$ itself) is positive, $\mathbf{P}$ is regular and, therefore, ergodic. Hence the limit exists. The left eigenvector corresponding to $\lambda = 1$ is given by

$$[x_1, x_2]\begin{bmatrix} 0.88 & 0.12 \\ 0.15 & 0.85 \end{bmatrix} = [x_1, x_2] \qquad \text{or} \qquad 0.12x_1 - 0.15x_2 = 0$$

Adjoining the condition $x_1 + x_2 = 1$ and solving, we obtain

$$\mathbf{E}_1[\mathbf{x}_1, \mathbf{x}_2] = [5/9, 4/9]$$

It follows that

$$\mathbf{L} = \lim_{n\to\infty} \mathbf{P}^n = \begin{bmatrix} 5/9 & 4/9 \\ 5/9 & 4/9 \end{bmatrix}$$

20.4 Is the stochastic matrix

$$\mathbf{P} = \begin{bmatrix} 0 & 1 \\ 0.4 & 0.6 \end{bmatrix}$$

regular? ergodic? Calculate $\mathbf{L} = \lim_{n\to\infty} \mathbf{P}^n$, if it exists.

Since each entry of

$$\mathbf{P}^2 = \begin{bmatrix} 0.40 & 0.60 \\ 0.24 & 0.76 \end{bmatrix}$$

is positive, $\mathbf{P}$ itself is regular and, therefore, ergodic; hence $\mathbf{L}$ exists. Solving

$$[x_1, x_2]\begin{bmatrix} 0 & 1 \\ 0.4 & 0.6 \end{bmatrix} = [x_1, x_2] \qquad \text{or} \qquad x_1 - 0.4x_2 = 0$$

together with $x_1 + x_2 = 1$, we find $\mathbf{E}_1 = [2/7, 5/7]$ and

$$\mathbf{L} = \begin{bmatrix} 2/7 & 5/7 \\ 2/7 & 5/7 \end{bmatrix}$$

20.5 Is the stochastic matrix

$$\mathbf{P} = \begin{bmatrix} 1 & 0 & 0 & 0 \\ 0.4 & 0 & 0.6 & 0 \\ 0.2 & 0 & 0.1 & 0.7 \\ 0 & 0 & 0 & 1 \end{bmatrix}$$

regular? ergodic? Calculate $\mathbf{L} = \lim_{n \to \infty} \mathbf{P}^n$, if it exists.

Rather than raise $\mathbf{P}$ to successively higher powers to ascertain whether it is regular, let us instead determine its eigenvalues by solving the characteristic equation:

$$\begin{vmatrix} 1-\lambda & 0 & 0 & 0 \\ 0.4 & -\lambda & 0.6 & 0 \\ 0.2 & 0 & 0.1-\lambda & 0.7 \\ 0 & 0 & 0 & 1-\lambda \end{vmatrix} = (1-\lambda)(-\lambda)(0.1-\lambda)(1-\lambda) = 0$$

Thus, $\lambda_1 = 1$ (double root), $\lambda_2 = 0.1$, $\lambda_3 = 0$. By Theorem 20.4, $\mathbf{P}$ is not regular. However, by Theorem 20.2, $\mathbf{P}$ is ergodic, since it possesses the two linearly independent left eigenvectors

$$[1, 0, 0, 0] \quad \text{and} \quad [0, 0, 0, 1]$$

corresponding to $\lambda_1 = 1$. As an easy calculation shows, the left eigenvectors

$$[-2, 0, 9, -7] \quad \text{and} \quad [4, 5, -30, 21]$$

respectively correspond to λ_2 and λ_3.

Theorem 20.3 now tells us that $\mathbf{P}$ is diagonalizable, with

$$\mathbf{M} = \begin{bmatrix} 1 & 0 & 0 & 0 \\ 0 & 0 & 0 & 1 \\ -2 & 0 & 9 & -7 \\ 4 & 5 & -30 & 21 \end{bmatrix} \quad \text{and} \quad \mathbf{D} = \begin{bmatrix} 1 & 0 & 0 & 0 \\ 0 & 1 & 0 & 0 \\ 0 & 0 & 0.1 & 0 \\ 0 & 0 & 0 & 0 \end{bmatrix}$$

Calculating

$$\mathbf{M}^{-1} = \begin{bmatrix} 1 & 0 & 0 & 0 \\ 8/15 & 7/15 & 10/15 & 3/15 \\ 2/9 & 7/9 & 1/9 & 0 \\ 0 & 1 & 0 & 0 \end{bmatrix}$$

we obtain from (*20.3*)

$$\mathbf{L} = \begin{bmatrix} 1 & 0 & 0 & 0 \\ 8/15 & 7/15 & 10/15 & 3/15 \\ 2/9 & 7/9 & 1/9 & 0 \\ 0 & 1 & 0 & 0 \end{bmatrix} \begin{bmatrix} 1 & 0 & 0 & 0 \\ 0 & 1 & 0 & 0 \\ 0 & 0 & 0 & 0 \\ 0 & 0 & 0 & 0 \end{bmatrix} \begin{bmatrix} 1 & 0 & 0 & 0 \\ 0 & 0 & 0 & 1 \\ -2 & 0 & 9 & -7 \\ 4 & 5 & -30 & 21 \end{bmatrix} = \begin{bmatrix} 1 & 0 & 0 & 0 \\ 8/15 & 0 & 0 & 7/15 \\ 2/9 & 0 & 0 & 7/9 \\ 0 & 0 & 0 & 1 \end{bmatrix}$$

20.6 Solve the problem formulated in Problem 20.1.

(*a*)
$$\mathbf{X}^{(5)} = \mathbf{X}^{(0)}\mathbf{P}^5 = [0.60, 0.40]\begin{bmatrix} 0.6477 & 0.3523 \\ 0.4404 & 0.5596 \end{bmatrix} = [0.5648, 0.4352]$$

After 5 years, Hi-Glo's share of the market will have declined to 56.48 percent.

(*b*) It follows from the results of Problem 20.3 that **P** is ergodic, with limit matrix **L**. Hence,

$$\mathbf{X}^{(\infty)} = \mathbf{X}^{(0)}\mathbf{L} = [0.60, 0.40]\begin{bmatrix} 5/9 & 4/9 \\ 5/9 & 4/9 \end{bmatrix} = [5/9, 4/9] = \mathbf{E}_1$$

Over the long run, Hi-Glo's share of the market will stabilize at 5/9, or approximately 55.56 percent.

20.7 Solve the problem formulated in Problem 20.1, if Hi-Glo currently controls 90 percent of the market.

(*a*)
$$\mathbf{X}^{(5)} = \mathbf{X}^{(0)}\mathbf{P}^5 = [0.90, 0.10]\begin{bmatrix} 0.6477 & 0.3523 \\ 0.4404 & 0.5596 \end{bmatrix} = [0.6270, 0.3730]$$

After 5 years, Hi-Glo will control approximately 63 percent of the market.

(*b*) Since **P** is regular, the limiting distribution remains the left eigenvector of **P** associated with $\lambda = 1$,

$$\mathbf{X}^{(\infty)} = \mathbf{E}_1 = [5/9, 4/9]$$

20.8 Solve the problem formulated in Problem 20.2.

Using (*20.2*) and the results of Problems 20.2 and 20.5, we have

$$\mathbf{X}^{(\infty)} = \mathbf{X}^{(0)}\mathbf{L} = [0, 45/66, 21/66, 0]\begin{bmatrix} 1 & 0 & 0 & 0 \\ 8/15 & 0 & 0 & 7/15 \\ 2/9 & 0 & 0 & 7/9 \\ 0 & 0 & 0 & 1 \end{bmatrix} = [0.4343, 0, 0, 0.5657]$$

Therefore, eventually, 43.43 percent of those currently in training (or about 29 people) will be dropped from the program, and 56.57 percent (or about 37 people) will become supervisors.

20.9 Solve the problem formulated in Problem 20.2, if all 66 people are currently in the classroom phase of the training program.

Now $\mathbf{X}^{(0)} = [0, 1, 0, 0]$, and so

$$\mathbf{X}^{(\infty)} = \mathbf{X}^{(0)}\mathbf{L} = [0, 1, 0, 0]\begin{bmatrix} 1 & 0 & 0 & 0 \\ 8/15 & 0 & 0 & 7/15 \\ 2/9 & 0 & 0 & 7/9 \\ 0 & 0 & 0 & 1 \end{bmatrix} = [8/15, 0, 0, 7/15]$$

Therefore, 8/15 of the 66 people in training (or about 35 people) will ultimately be dropped from the program, with the remaining 31 people eventually becoming supervisors. Comparing this result with the result of Problem 19.8, we see that the limiting distributions are influenced by the initial distributions, the usual situation whenever a stochastic matrix is ergodic but not regular.

20.10 Construct the *state-transition diagram* for the Markov chain of Problem 20.2.

A state- transition diagram is an oriented network (see Chapter 13) in which the nodes represent states and the arcs represent possible transitions. Labeling the states as in Problem 20.2, we have the state-transition diagram shown in Fig. 20-1. The number on each arc is the probability of the transition.

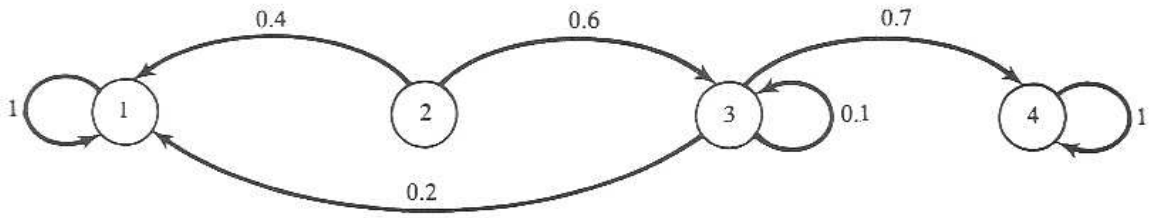

Fig. 20-1

20.11 A sewing machine operator works solely on one phase of the production process for a particular design of clothing. This phase requires exactly half an hour per garment to complete. Every 30 min a messenger arrives at the operator's table to collect all garments the operator has completed and to deliver new garments for the operator to sew. The number of new garments that the messenger carries is uncertain: 30 percent of the time the messenger has no garments for the operator; 50 percent of the time the messenger has only one garment to leave; 20 percent of the time the messenger has two garments for the operator. However, the messenger is instructed never to leave the operator with more than three unfinished garments altogether. (Unfinished garments that cannot be left with the operator, as a result of this policy, are taken to another operator for processing.) Determine the percentage of time that the operator is idle, assuming that any unfinished garments on the operator's table at the end of a work shift remain there for processing by the operator on the next business day.

We can model this process as a three-state Markov chain by letting the states be the number of unfinished garments on the operator's table *just before the messenger arrives*. We designate the states as 1, 2, and 3, respectively, representing 0, 1, and 2 unfinished garments; the stages are the half-hour interarrival intervals.

If the operator has one unfinished garment at the beginning of a stage (just before the messenger arrives) and if the messenger leaves one garment (with probability 0.5), then one garment will be completed by the beginning of the next stage, leaving the operator again with one unfinished garment; hence, $p_{22} = 0.5$. If the operator has two unfinished garments at the beginning of a stage and if the messenger arrives with either 1 or 2 new garments (with probability $0.5 + 0.2 = 0.7$), then the messenger will leave only one garment, and at the beginning of the next period the operator will have two unfinished garments remaining, since one will have been processed during the period. Therefore, $p_{33} = 0.7$. Considering all other possibilities in the same fashion, we generate the stochastic matrix

$$\mathbf{P} = \begin{bmatrix} 0.8 & 0.2 & 0 \\ 0.3 & 0.5 & 0.2 \\ 0 & 0.3 & 0.7 \end{bmatrix}$$

All the elements of $\mathbf{P}^2$ are positive, so $\mathbf{P}$ is regular. The left eigenvector associated with $\lambda_1 = 1$ and having component-sum unity is found to be

$$\mathbf{E}_1 = \left[\frac{9}{19}, \frac{6}{19}, \frac{4}{19}\right]$$

Since $\mathbf{P}$ is regular, this vector is also $\mathbf{X}^{(\infty)}$. Over the long run, the operator starts a stage in state 1 (no unfinished garments remaining) 9/19 of the time. The messenger then arrives and, with probability 0.3, leaves no new garments for processing, thereby rendering the operator idle. Thus the operator is idle

$$\frac{9}{19}(0.3) = 0.1421$$

or approximately 14 percent of the time.

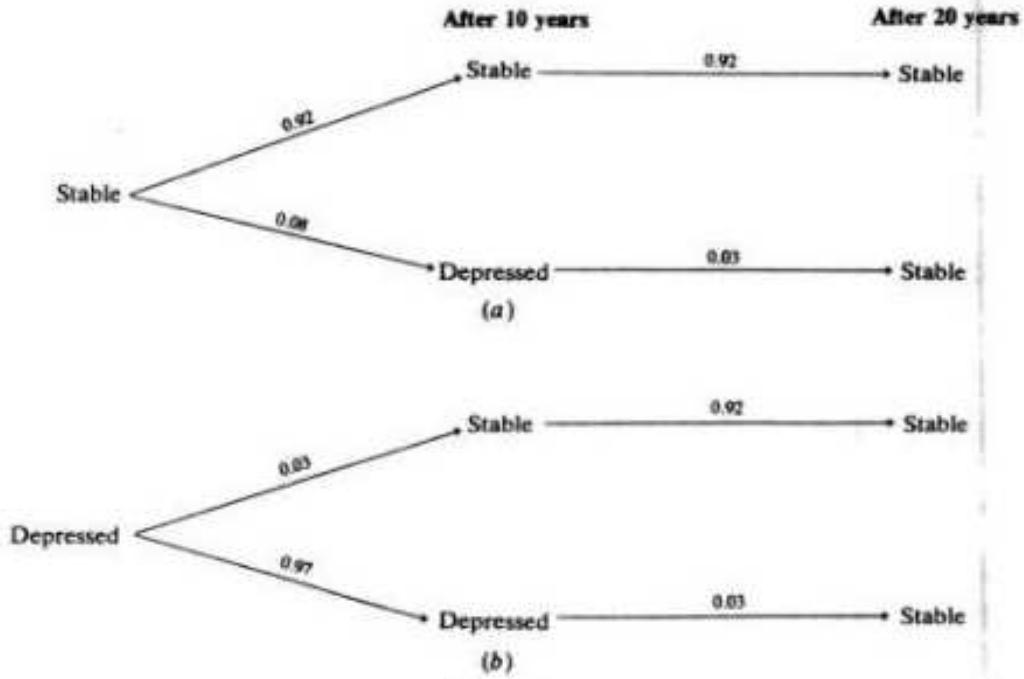

Fig. 20-2

20.12 Verify that, for the stochastic matrix defined in Example 20.1, $p_{ij}^{(2)}$ represents the probability of moving from state i to state j in two time periods.

There are two ways for a stable household to remain stable after 20 years, as shown in Fig. 20-2(a): either it remains stable throughout the first 10 years and throughout the second 10 years or it becomes depressed after 10 years and then reverts to stability after another 10 years. The probability that a stable household will remain stable over one time period is 0.92; hence the probability that it will remain stable over two time periods is (0.92)(0.92). The probability that a stable household will become depressed in 10 years is 0.08, and the probability that a depressed household will become stable over the next 10 years is 0.03; so the probability of both events happening to the same household is (0.08)(0.03). Thus, the probability that a stable household will be stable after two time periods is

$$(0.92)(0.92) + (0.08)(0.03)$$

which is exactly the (1, 1)-element of $\mathbf{P}^2$.

Figure 20-2(b) depicts the ways a depressed household can become stable over two time periods. The probability that it becomes stable over the first time period and then remains stable over the next time period is (0.03)(0.92). The probability that it remains depressed over the first time period and then becomes stable over the next time period is (0.97)(0.03). Thus, the probability that either one of these two situations occurs is

$$(0.03)(0.92) + (0.97)(0.03)$$

which is exactly the (2, 1)-element of $\mathbf{P}^2$. The other two cases are handled similarly.

20.13 Prove that if $\mathbf{P}$ is regular, then all the rows of $\mathbf{L} = \lim_{n\to\infty} \mathbf{P}^n$ are identical.

Given $\mathbf{L} = \lim_{n\to\infty} \mathbf{P}^n$, it is also true that $\mathbf{L} = \lim_{n\to\infty} \mathbf{P}^{n-1}$. Consequently,

$$\mathbf{L} = \lim_{n\to\infty} \mathbf{P}^n = \lim_{n\to\infty} (\mathbf{P}^{n-1}\mathbf{P}) = (\lim_{n\to\infty} \mathbf{P}^{n-1})\mathbf{P} = \mathbf{LP}$$

which implies that every row of $\mathbf{L}$ is a left eigenvector of $\mathbf{P}$ corresponding to $\lambda = 1$.

Now, **P** being regular, all such eigenvectors are scalar multiples of a single vector. On the other hand, **L** being stochastic, each of its rows sums to unity. It follows that all rows are identical.

20.14 Prove that if λ is an eigenvalue of a stochastic matrix **P**, then $|\lambda| \leq 1$.

Let $\mathbf{E} \equiv [e_1, e_2, \ldots, e_N]^T$ be a *right* eigenvector belonging to λ. Then $\mathbf{PE} = \lambda\mathbf{E}$, and considering the jth component of both sides of this equality, we conclude that

$$\sum_{k=1}^{N} p_{jk} e_k = \lambda e_j \tag{1}$$

Let e_i be that component of **E** having the greatest magnitude; i.e.,

$$|e_i| = \max\{|e_1|, |e_2|, \ldots, |e_N|\} \tag{2}$$

By definition, $\mathbf{E} \neq \mathbf{0}$, so that $|e_i| > 0$. It follows from (*1*), with j set equal to i, and (*2*) that

$$|\lambda|\,|e_i| = |\lambda e_i| = \left|\sum_{k=1}^{N} p_{ik} e_k\right| \leq \sum_{k=1}^{N} p_{ik}|e_k| \leq |e_i| \sum_{k=1}^{N} p_{ik} = |e_i|$$

and the result $|\lambda| \leq 1$ follows immediately.

Supplementary Problems

In Problems 20.15 through 20.21, determine whether the given matrices are stochastic. If so, determine whether they are regular or ergodic, or neither. Calculate their limiting values, if these exist.

20.15 $\begin{bmatrix} 1 & 0 \\ 0.21 & 0.79 \end{bmatrix}$

20.16 $\begin{bmatrix} 0.5 & 0.3 & 0.2 \\ 0.5 & 0.5 & 0 \\ 0 & 0 & 0 \end{bmatrix}$

20.17 $\begin{bmatrix} 1 & 0 & 0 \\ 0 & -1 & 0 \\ 0 & 0 & -1 \end{bmatrix}$

20.18 $\begin{bmatrix} 0 & 0 & 1 \\ 0.5 & 0.3 & 0.2 \\ 1 & 0 & 0 \end{bmatrix}$

20.19 $\begin{bmatrix} 1 & 0 & 0 & 0 \\ 0 & 0.5 & 0 & 0.5 \\ 0 & 0 & 1 & 0 \\ 0 & 0.3 & 0 & 0.7 \end{bmatrix}$

20.20 $\begin{bmatrix} 0.1 & 0.8 & 0.1 \\ 0.9 & 0 & 0.1 \\ 0.2 & 0.2 & 0.6 \end{bmatrix}$

20.21 $\begin{bmatrix} 1 & 0 & 0 \\ 0.21 & 0.79 & 0 \\ 0.17 & 0.35 & 0.48 \end{bmatrix}$

20.22 Find the proportion of households that ultimately are classified as economically stable, if the data in Example 20.1 remain valid over the long run.

20.23 A recently completed survey of subscribers to a travel magazine shows that 65 percent of them have at least one airline credit card. When compared with a similar survey taken 5 years ago, the data indicate that 40 percent of those individuals who did not have an airline credit card subsequently obtained one, while 10 percent of those who carried such cards 5 years ago no longer do so. Assuming that these trends continue into the future, determine the proportion of subscribers who will own airline credit cards (*a*) in 10 years, and (*b*) over the long run.

20.24 An airline with a 7:15 A.M. commuter flight between New York City and Washington, D.C., does not want the flight to depart late 2 days in a row. If the flight leaves late one day, the airline makes a special effort the next day to have the flight leave on time, and succeeds 90 percent of the time. If the flight was not late in leaving the previous day, the airline makes no special arrangements, and the flight departs as scheduled 60 percent of the time. What percentage of the time is the flight late in departing?

20.25 Grapes in the Sonoma Valley are classified as either superior, average, or poor. Following a superior harvest, the probabilities of having a superior, average, and poor harvest the next year are 0, 0.8, and 0.2, respectively. Following an average harvest, the probabilities of a superior, average, and poor harvest are 0.2, 0.6, and 0.2. Following a poor harvest, the probabilities of a superior, average, and poor harvest are 0.1, 0.8, and 0.1. Determine the probabilities of a superior harvest for each of the next 5 years, if the most recent harvest was average.

20.26 The geriatric ward of a hospital lists its patients as bedridden or ambulatory. Historical data indicate that over a 1-week period, 30 percent of all ambulatory patients are discharged, 40 percent remain ambulatory, and 30 percent are remanded to complete bed rest. During the same period, 50 percent of all bedridden patients become ambulatory, 20 percent remain bedridden, and 30 percent die. Currently the hospital has 100 patients in its geriatric ward, with 30 bedridden and 70 ambulatory. Determine the status of these patients (*a*) after 2 weeks, and (*b*) over the long run. (The status of a discharged patient does not change if the patient dies.)

20.27 The owners of a large block of rental apartments in Chicago is considering as its operating agent a real estate management firm with an excellent record in Boston. Based on ratings of good, average, and poor for the condition of buildings in Boston under the firm's control, it has been documented that 50 percent of all buildings that begin a year in good condition remain in good condition at the end of the year, with the other 50 percent deteriorating to average condition. Of all buildings that begin a year in average condition, 30 percent remain in average condition at the end of the year and 70 percent are upgraded to good condition. Of all buildings that begin a year in poor condition, 90 percent remain in poor condition after 1 year, while the other 10 percent are upgraded to good condition. Assuming that these trends will prevail for Chicago also if the firm is hired, determine the condition of apartments under the firm's management that can be expected over the long run.

20.28 A state in a Markov chain is *absorbing* if no objects can leave the state once they enter it. Find all absorbing states for the Markov chains defined by the matrices given in (*a*) Problem 20.15, (*b*) Problem 20.18, (*c*) Problem 20.19, and (*d*) Problem 20.21.

20.29 Prove that the stochastic matrix for a Markov chain that has at least one absorbing state cannot be regular.

20.30 From the definition of matrix multiplication, verify that the product of two stochastic matrices of the same order is itself stochastic.

20.31 Show that $\mathbf{U} = [1, 1, 1, \ldots, 1]$ is a left eigenvector of $\mathbf{P}^T$, the transpose of an arbitrary stochastic matrix $\mathbf{P}$.

20.32 Using the result of Problem 20.31, prove that every stochastic matrix $\mathbf{P}$ has $\lambda = 1$ as an eigenvalue.

20.33 Prove Theorem 20.3.

20.34 Show by example that the converse to Theorem 20.4 is not valid.

Chapter 21

Markovian Birth-Death Processes

POPULATION GROWTH PROCESSES

A *population* is a set of objects having a common characteristic. Examples include individuals affected with measles, automobiles waiting at a toll plaza, and inventory in a warehouse. A large number of decision processes are concerned with analyzing and controlling the growth of a population.

We designate the number of members in a given population at time t by $N(t)$. The *states* of a growth process are the various values $N(t)$ can assume; these are generally the nonnegative integers. The probability that $N(t)$ equals a specific nonnegative integer n is denoted by $p_n(t)$.

A *birth* occurs whenever a new member joins the population; a *death* occurs whenever a member leaves the population. A *pure birth process* is one that experiences only births, no deaths; a *pure death process* is one that experiences only deaths, no births.

Example 21.1 A college advertises for candidates for the position of Academic Dean, with a closing date for receiving applications specified. If no processing of applications is undertaken until the closing date and if no applications are withdrawn by the candidates themselves, then the process of receiving applications is a pure birth process up to the closing date. If no applications are accepted after the closing date, then the process of reducing the pool of applications under active consideration through evaluation and elimination is a pure death process. If applications are processed during the same period they are received, the process is a birth-death process. In all cases, the population is the set of completed applications under active consideration.

Definition: A function $f(t)$ is $o(\Delta t)$, read "little oh of Δt," if

$$\lim_{\Delta t \to 0} \frac{f(\Delta t)}{\Delta t} = 0$$

Such a function tends to zero at a faster rate than the first power of its argument. If $f(t)$ and $g(t)$ are each $o(\Delta t)$, so are $f(t) + g(t)$ and $f(t)g(t)$.

Example 21.2 The function $f(t) = t^3$ is $o(\Delta t)$, since

$$\lim_{\Delta t \to 0} \frac{(\Delta t)^3}{\Delta t} = \lim_{\Delta t \to 0} (\Delta t)^2 = 0$$

But $\sin t \neq o(\Delta t)$, because

$$\lim_{\Delta t \to 0} \frac{\sin(\Delta t)}{\Delta t} = 1 \neq 0$$

•

GENERALIZED MARKOVIAN BIRTH-DEATH PROCESSES

A population growth process is a Markov process (see Chapter 20) if the transition probabilities for moving from one state to another depend only on the current state and not on any of the past history

Copyrighted Material

experienced by the process in reaching the current state. More formally, a generalized Markovian birth-death process satisfies the following criteria:

The probability distributions governing the numbers of births and deaths in a specific time interval depend on the length of the interval but not on its starting point.

The probability of exactly one birth in a time interval of length Δt, given a population of n members at the beginning of the interval, is $\lambda_n \Delta t + o(\Delta t)$, where λ_n is a constant, possibly different for different values of n.

The probability of exactly one death in a time interval of length Δt, given a population of n members at the beginning of the interval, is $\mu_n \Delta t + o(\Delta t)$, where μ_n is a constant, possibly different for different values of n.

The probability of more than one birth and the probability of more than one death in a time interval of length Δt are both $o(\Delta t)$.

These criteria imply, in the limit as Δt approaches zero, the *Kolmogorov equations* for the state probabilities:

$$\frac{dp_n(t)}{dt} = -(\lambda_n + \mu_n)p_n(t) + \mu_{n+1}p_{n+1}(t) + \lambda_{n-1}p_{n-1}(t) \qquad (n = 1, 2, \ldots)$$

$$\frac{dp_0(t)}{dt} = -\lambda_0 p_0(t) + \mu_1 p_1(t) \tag{21.1}$$

(See Problem 21.6.)

LINEAR MARKOVIAN BIRTH PROCESSES

A *linear* Markovian birth process is a Markovian pure birth process in which the probability of a birth in a small time interval is proportional to both the current number of members in the population and the length of the interval. That is, for all n, $\mu_n = 0$ and $\lambda_n = n\lambda$. The constant of proportionality λ is the *birth rate* or *arrival rate*. The solution to (*21.1*), for an initial population of one member, is

$$p_n(t) = \begin{cases} (1 - e^{-\lambda t})^{n-1} e^{-\lambda t} & (n = 1, 2, \ldots) \\ 0 & (n = 0) \end{cases} \tag{21.2}$$

The expected size of the population at time t is $E[N(t)] = e^{\lambda t}$. If the population is initialized with $N(0)$ members, then its expected size at time t is

$$E[N(t)] = N(0)e^{\lambda t} \tag{21.3}$$

(See Problem 21.1.)

LINEAR MARKOVIAN DEATH PROCESSES

A *linear* Markovian death process is a Markovian pure death process in which the probability of a death in a small time interval is proportional to both the current size of the population and the length of the interval. That is, for all n, $\lambda_n = 0$ and $\mu_n = n\mu$. The constant of proportionality μ is the *death rate*. The solution to (*21.1*), for an initial population of $N(0)$, is

$$p_n(t) = \begin{cases} \dbinom{N(0)}{n} e^{-n\mu t}(1 - e^{-\mu t})^{N(0)-n} & [n \le N(0)] \\ 0 & [n > N(0)] \end{cases} \tag{21.4}$$

The expected size of the population at time t is

$$E[N(t)] = N(0)e^{-\mu t} \tag{21.5}$$

(See Problem 21.3.)

LINEAR MARKOVIAN BIRTH-DEATH PROCESSES

A *linear* Markovian birth-death process is a Markovian birth-death process in which, for all n, $\lambda_n = n\lambda$ and $\mu_n = n\mu$. The solution to (*21.1*), for an initial population of one member, is

$$p_n(t) = \begin{cases} [1 - r(t)][1 - s(t)][s(t)]^{n-1} & (n = 1, 2, \ldots) \\ r(t) & (n = 0) \end{cases} \tag{21.6}$$

where

$$r(t) \equiv \frac{\mu[e^{(\lambda-\mu)t} - 1]}{\lambda e^{(\lambda-\mu)t} - \mu} \qquad \text{and} \qquad s(t) \equiv \frac{\lambda[e^{(\lambda-\mu)t} - 1]}{\lambda e^{(\lambda-\mu)t} - \mu}$$

The expected size of the population at time t is $E[N(t)] = e^{(\lambda-\mu)t}$. If the population is initialized at $N(0)$ members, then its expected size at time t is

$$E[N(t)] = N(0)e^{(\lambda-\mu)t} \tag{21.7}$$

(See Problem 21.5.)

It is clear that the linear birth-death process includes the linear birth process and the linear death process as the special cases $\mu = 0$ and $\lambda = 0$, respectively. Another important property, which is suggested by (*21.7*), is contained in the following remark [see Problem 21.9(*b*)].

Remark: A linear Markovian birth-death process with parameters λ and μ and an initial population $N(0)$ is equivalent to the sum of $N(0)$ concurrent but independent processes, each with parameters λ and μ and an initial population 1.

Example 21.3 Find the state probabilities $p_n^{(2)}(t)$ for the linear Markovian birth process beginning with a population of 2.

The two independent subprocesses each have the state probabilities given by (*21.2*). The overall process will be in state n if the first subprocess is in state 0 and the second is in state n, or if the first is in state 1 and the second is in state $n - 1$, or . . . . Thus,

$$p_n^{(2)}(t) = p_0(t)p_n(t) + p_1(t)p_{n-1}(t) + \cdots + p_n(t)p_0(t) \tag{21.8}$$

Using (*21.2*) in (*21.8*), we find

$$p_n^{(2)}(t) = \begin{cases} (n-1)(1 - e^{-\lambda t})^{n-2}e^{-2\lambda t} & (n = 2, 3, \ldots) \\ 0 & (n = 0, 1) \end{cases}$$

POISSON BIRTH PROCESSES

A *Poisson birth process* is a Markovian pure birth process in which the probability of a birth in any small time interval is independent of the size of the population. That is, for all n, $\lambda_n = \lambda$ and $\mu_n = 0$. In such a process, new arrivals to the population are not created by current members; rather, they enter the population from without, as did the completed applications in Example 21.1. New members can enter the population even when the current state is 0, a marked difference from the linear Markovian birth situation.

The solution to (*21.1*), for an initial population of 0, is

$$p_n(t) = \frac{(\lambda t)^n}{n!} e^{-\lambda t} \qquad (n = 0, 1, 2, \ldots) \tag{21.9}$$

If the population is initialized at $N(0)$ members, the solution to (*21.1*) is

$$p_n(t) = \begin{cases} \dfrac{(\lambda t)^{n-N(0)} e^{-\lambda t}}{[n - N(0)]!} & [n \geq N(0)] \\ 0 & [n < N(0)] \end{cases} \tag{21.10}$$

The expected size of the population at time t is

$$E[N(t)] = N(0) + \lambda t \tag{21.11}$$

(See Problem 21.2.)

Definition: A discrete random variable N has a *Poisson distribution*, with parameter $\alpha \geq 0$, if

$$P(N = n) = \frac{\alpha^n}{n!} e^{-\alpha} \qquad (n = 0, 1, 2, \ldots) \tag{21.12}$$

The expected value of N is $E(N) = \alpha$.

Definition: A continuous random variable T has an *exponential distribution*, with parameter $\beta \geq 0$, if

$$P(T \leq t) = 1 - e^{-\beta t} \qquad (t \geq 0) \tag{21.13}$$

The expected value of T is $E(T) = 1/\beta$.

We may summarize (*21.9*) and (*21.10*) by saying that, in a Poisson birth process with birth rate λ, $N(t) - N(0)$ has a Poisson distribution, with parameter λt. Furthermore, in such a process, the *interarrival time*, which is the time between successive births, has an exponential distribution, with expected value $1/\lambda$. (See Problem 21.8.) Conversely,

Theorem 21.1: If the interarrival time is exponentially distributed, with expected value $1/\beta$, then the number of arrivals is a Poisson birth process, with birth rate $\lambda = \beta$.

POISSON DEATH PROCESSES

A *Poisson death process* is a Markovian pure death process in which the probability of a death in any small time interval is independent of the size of the population. That is, for all n, $\lambda_n = 0$ and $\mu_n = \mu$. The solution to (*21.1*), for an initial population $N(0)$, is

$$p_n(t) = \begin{cases} 0 & [n > N(0)] \\ \dfrac{(\mu t)^{N(0)-n} e^{-\mu t}}{[N(0) - n]!} & [1 \leq n \leq N(0)] \\ 1 - \displaystyle\sum_{n=1}^{N(0)} p_n(t) & (n = 0) \end{cases} \tag{21.14}$$

(See Problem 21.4.)

POISSON BIRTH-DEATH PROCESSES

A Poisson birth-death process is a Markovian birth-death process in which both the probability of a birth and the probability of a death in any small time interval are independent of the size of the population. That is, for all n, $\lambda_n = \lambda$ and $\mu_n = \mu$. Such processes form the basis of queueing theory and are developed in Chapter 23.

Solved Problems

21.1 A linear Markovian birth process initialized at one member experiences an average hourly birth rate $\lambda = 2$. Determine the probability of having a population larger than 3 after 1 h, and the expected size of the population at that time.

With $\lambda = 2$ new births per member per hour and with $t = 1$ h, (*21.2*) gives

$$p_0(1) = 0 \qquad p_2(1) = (1 - e^{-2})^1 e^{-2} = 0.117$$

$$p_1(1) = (1 - e^{-2})^0 e^{-2} = 0.135 \qquad p_3(1) = (1 - e^{-2})^2 e^{-2} = 0.101$$

The probability of having more than three members in the population after 1 h is then

$$1 - (0 + 0.135 + 0.117 + 0.101) = 0.647$$

The expected size of the population at that time is given by (*21.3*) as

$$E[N(1)] = 1e^{2(1)} = 7.389 \text{ members}$$

21.2 Solve Problem 21.1 if the process is a Poisson birth process.

With $N(0) = 1$, $t = 1$ h, and $\lambda = 2$ births per hour, (*21.10*) gives

$$p_0(1) = 0 \qquad p_2(1) = \frac{2^1}{1!} e^{-2} = 0.271$$

$$p_1(1) = \frac{2^0}{0!} e^{-2} = 0.135 \qquad p_3(1) = \frac{2^2}{2!} e^{-2} = 0.271$$

The probability of having more than three members in the population after 1 h is then

$$1 - (0 + 0.135 + 0.271 + 0.271) = 0.323$$

The expected size of the population at that time is given by Eq. (*21.11*) as

$$E[N(1)] = 1 + 2(1) = 3 \text{ members}$$

21.3 A linear Markovian death process initialized at 10 members experiences an average weekly death rate $\mu = 0.6$. Determine the probability of having a population of at least eight members after 3 days, and the expected size of the population at that time.

With $N(0) = 10$, $t = (3/7)$ week, and $\mu = 0.6$ deaths per member per week, (*21.4*) gives

$$p_8(3/7) = \binom{10}{8} e^{-8(0.6)(3/7)}(1 - e^{-(0.6)(3/7)})^{10-8} = 45(0.1278)(1 - 0.7733)^2 = 0.296$$

$$p_9(3/7) = \binom{10}{9} e^{-9(0.6)(3/7)}(1 - e^{-(0.6)(3/7)})^{10-9} = 10(0.0988)(1 - 0.7733)^1 = 0.224$$

$$p_{10}(3/7) = \binom{10}{10} e^{-10(0.6)(3/7)}(1 - e^{-(0.6)(3/7)})^{10-10} = 1(0.0764)(1 - 0.7733)^0 = 0.076$$

The probability of having eight or more members in the population after 3 days is therefore

$$0.296 + 0.224 + 0.076 = 0.596$$

The expected size of the population at that time is given by (*21.5*) as

$$E[N(3/7)] = 10e^{-(0.6)(3/7)} = 7.73 \text{ members}$$

21.4 Solve Problem 21.3 if the process is a Poisson death process.

With $N(0) = 10$, $t = (3/7)$ week, and $\mu = 0.6$ deaths per week, (*21.14*) gives

$$p_{10}(3/7) = \frac{[(0.6)(3/7)]^{10-10}}{(10-10)!} e^{-(0.6)(3/7)} = 0.7733$$

$$p_9(3/7) = \frac{[(0.6)(3/7)]^{10-9}}{(10-9)!} e^{-(0.6)(3/7)} = 0.1988$$

$$p_8(3/7) = \frac{[(0.6)(3/7)]^{10-8}}{(10-8)!} e^{-(0.6)(3/7)} = 0.0256$$

The probability of having eight or more members in the population after 3 days is then

$$0.0256 + 0.1988 + 0.7733 = 0.9977$$

To calculate the expected value of $N(3/7)$, the remaining state probabilities for $t = 3/7$ are needed. Equation (*21.14*) gives these, to four decimals, as

$$p_7(3/7) = 0.0022 \qquad p_6(3/7) = 0.0001 \qquad p_5(3/7) = p_4(3/7) = \cdots = p_0(3/7) = 0$$

Thus,

$$\begin{aligned} E[N(3/7)] &= 10(0.7733) + 9(0.1988) + 8(0.0256) + 7(0.0022) + 6(0.0001) + 5(0) + \cdots + 0(0) \\ &= 9.74 \text{ members} \end{aligned}$$

21.5 A biologist observes the growth of bacteria strands in a culture and finds that both the probability of the birth of a strand and the probability of the death of a strand are proportional to the number of strands in the culture and to elapsed time. On the average, each strand produces a new strand every 7 h and dies after 30 h. How many strands should be expected in a culture after 1 week, if the population is initialized at one strand?

Taking one day as the unit of time, we have $N(0) = 1$,

$$\lambda = \frac{1}{7}(24) = 3.428571429 \text{ births per member per day}$$

and

$$\mu = \frac{1}{30}(24) = 0.8 \text{ deaths per member per day}$$

It follows from (*21.7*) that the expected size of the population after 7 days is

$$E[N(7)] = 1e^{(3.428571429-0.8)(7)} = 97\,953\,164 \text{ strands}$$

21.6 Derive the Kolmogorov equations, (*21.1*).

The size of the population at time $t + \Delta t$, $N(t + \Delta t)$, is governed by the size at time t, $N(t)$, together with whatever changes (births and/or deaths) occur in the interval $(t, t + \Delta t]$. Thus, for $n \geq 1$,

$$\begin{aligned} P\{N(t+\Delta t) = n\} = {} & P\{N(t) = n \text{ and there are 0 births and 0 deaths in } (t, t+\Delta t]\} \\ & + \\ & P\{N(t) = n \text{ and there are 1 birth and 1 death in } (t, t+\Delta t]\} \\ & + \\ & P\{N(t) = n-1 \text{ and there are 1 birth and 0 deaths in } (t, t+\Delta t]\} \\ & + \\ & P\{N(t) = n+1 \text{ and there are 0 births and 1 death in } (t, t+\Delta t]\} \\ & + \\ & P\{\text{a combination of events involving more than 1 birth or more than 1 death in } (t, t+\Delta t]\} \end{aligned}$$

or

$$p_n(t + \Delta t) = a + b + c + d + e \tag{I}$$

Utilizing the notion of conditional probability (see Problem 18.5), we have

$$a = P\{N(t) = n\} \times P\{0 \text{ births and 0 deaths in } \Delta t \mid N(t) = n\}$$

By the fundamental assumptions, the probability of zero births in a time interval of length Δt is, to within $o(\Delta t)$, 1 minus the probability of exactly one birth; given state n at the beginning of the interval, this latter probability equals $\lambda_n \Delta t + o(\Delta t)$. Hence, the probability of zero births is

$$1 - \lambda_n \Delta t + o(\Delta t)$$

and, under the same conditions, the probability of zero deaths is

$$1 - \mu_n \Delta t + o(\Delta t)$$

Moreover, births occur independently from deaths. Therefore,

$$\begin{aligned} a &= p_n(t) \times [1 - \lambda_n \Delta t + o(\Delta t)][1 - \mu_n \Delta t + o(\Delta t)] \\ &= p_n(t)[1 - (\lambda_n + \mu_n)\Delta t] + o(\Delta t) \end{aligned}$$

Reasoning in similar fashion, we obtain

$$b = o(\Delta t)$$
$$c = p_{n-1}(t)(\lambda_{n-1}\Delta t) + o(\Delta t)$$
$$d = p_{n+1}(t)(\mu_{n+1}\Delta t) + o(\Delta t)$$
$$e = o(\Delta t)$$

and (*1*) becomes

$$p_n(t + \Delta t) = p_n(t) + [-(\lambda_n + \mu_n)p_n(t) + \lambda_{n-1}p_{n-1}(t) + \mu_{n+1}p_{n+1}(t)]\Delta t + o(\Delta t) \tag{2}$$

Transposing $p_n(t)$ to the left-hand side of (*2*), dividing through by Δt, and letting $\Delta t \to 0$, we obtain the Kolmogorov equations for $n = 1, 2, \ldots$.

The case $n = 0$ requires separate consideration, since no deaths are possible in state 0. Carrying out the analysis as above, we readily obtain the remaining Kolmogorov equation.

21.7 (*a*) Derive (*21.6*) and (*b*) generalize to the case of an arbitrary initial population $N(0)$.

(*a*) With $\lambda_n = n\lambda$ and $\mu_n = n\mu$, the Kolmogorov equations, (*21.1*), become

$$\frac{dp_n(t)}{dt} = -n(\lambda + \mu)p_n(t) + (n + 1)\mu p_{n+1}(t) + (n - 1)\lambda p_{n-1}(t) \tag{1}$$

for $n = 1, 2, \ldots$, and

$$\frac{dp_0(t)}{dt} = \mu p_1(t) \tag{2}$$

One way of solving these equations is by replacing them with a single partial differential equation for the *probability generating function*

$$F(z, t) \equiv \sum_{n=0}^{\infty} p_n(t)z^n \tag{3}$$

The procedure is as follows. Multiply (*1*) by z^n, sum over all n ($n = 1, 2, \ldots$), and add the result to (*2*), giving, after rearrangement,

$$\sum_{n=0}^{\infty} \frac{dp_n(t)}{dt} z^n = -(\lambda + \mu) \sum_{n=1}^{\infty} np_n(t)z^n + \mu \sum_{n=0}^{\infty} (n + 1)p_{n+1}(t)z^n + \lambda \sum_{n=1}^{\infty} (n - 1)p_{n-1}(t)z^n \tag{4}$$

But, from differentiation of (*3*),

$$\sum_{n=0}^{\infty} \frac{dp_n(t)}{dt} z^n = \frac{\partial F(z, t)}{\partial t}$$

$$\sum_{n=1}^{\infty} np_n(t)z^n = z\frac{\partial F(z, t)}{\partial z}$$

$$\sum_{n=0}^{\infty} (n + 1)p_{n+1}(t)z^n = \frac{\partial F(z, t)}{\partial z}$$

$$\sum_{n=1}^{\infty} (n - 1)p_{n-1}(t)z^n = z^2\frac{\partial F(z, t)}{\partial z}$$

Hence, (*4*) becomes

$$\frac{\partial F(z, t)}{\partial t} = [-(\lambda + \mu)z + \mu + \lambda z^2]\frac{\partial F(z, t)}{\partial z} \tag{5}$$

Solving this partial differential equation by separation of variables, we find that one solution is

$$e^{t}\left(\frac{z-1}{z-\delta}\right)^{1/(\lambda-\mu)} \qquad \text{where} \qquad \delta \equiv \mu/\lambda$$

The general solution to (5) is

$$F(z,t) = g\left[e^{t}\left(\frac{z-1}{z-\delta}\right)^{1/(\lambda-\mu)}\right] \tag{6}$$

where g is an arbitrary function of one variable. To determine g, we note that, for an initial population of one member, $p_1(0) = 1$ and $p_n(0) = 0$ $(n \neq 1)$; hence

$$F(z,0) = \sum_{n=0}^{\infty} p_n(0)z^n = z \tag{7}$$

Applying this initial condition to (6), we obtain

$$z = g\left[\left(\frac{z-1}{z-\delta}\right)^{1/(\lambda-\mu)}\right] \tag{8}$$

Setting

$$y = \left(\frac{z-1}{z-\delta}\right)^{1/(\lambda-\mu)}$$

we have, inversely,

$$z = \frac{\delta y^{\lambda-\mu} - 1}{y^{\lambda-\mu} - 1} \tag{9}$$

whereupon (8) may be written as

$$g(y) = \frac{\delta y^{\lambda-\mu} - 1}{y^{\lambda-\mu} - 1} \tag{10}$$

Then (6) becomes

$$F(z,t) = \frac{\delta\left[e^{t}\left(\frac{z-1}{z-\delta}\right)^{1/(\lambda-\mu)}\right]^{\lambda-\mu} - 1}{\left[e^{t}\left(\frac{z-1}{z-\delta}\right)^{1/(\lambda-\mu)}\right]^{\lambda-\mu} - 1}$$

which simplies to

$$F(z,t) = \frac{\mu[e^{t(\lambda-\mu)} - 1] + z[-\mu e^{t(\lambda-\mu)} + \lambda]}{[\lambda e^{t(\lambda-\mu)} - \mu] - z\lambda[e^{t(\lambda-\mu)} - 1]} \tag{11}$$

Finally, we need to expand $F(z,t)$ in powers of z, thereby obtaining $p_n(t)$ as the coefficient of z^n. Set

$$r(t) \equiv \frac{\mu[e^{t(\lambda-\mu)} - 1]}{\lambda e^{t(\lambda-\mu)} - \mu} \qquad s(t) \equiv \frac{\lambda[e^{t(\lambda-\mu)} - 1]}{\lambda e^{t(\lambda-\mu)} - \mu} \qquad m(t) \equiv \frac{\lambda - \mu e^{t(\lambda-\mu)}}{\lambda e^{t(\lambda-\mu)} - \mu}$$

Then

$$F(z,t) = \frac{r(t) + zm(t)}{1 - zs(t)} = [r(t) + zm(t)]\left[\frac{1}{1 - zs(t)}\right] \tag{12}$$

In view of the geometric series

$$\frac{1}{1-x} = \sum_{n=0}^{\infty} x^n \qquad (|x| < 1)$$

(*12*) gives

$$F(z,t) = r(t) + \sum_{n=1}^{\infty} [r(t)s(t) + m(t)][s(t)]^{n-1} z^n$$

It is easily verified algebraically that

$$r(t)s(t) + m(t) = [1 - r(t)][1 - s(t)]$$

Hence,

$$F(z,t) = r(t) + \sum_{n=1}^{\infty} \{[1 - r(t)][1 - s(t)][s(t)]^{n-1}\} z^n \tag{13}$$

The coefficients in (*13*) given (*21.6*).

(*b*) One readily verifies that any power of a solution to (*5*) above is itself a solution. In particular,

$$\Phi(z,t) = [F(z,t)]^{N(0)}$$

where $F(z,t)$ is given by (*11*) or (*13*), is a solution; and this solution satisfies the initial condition

$$\Phi(z,0) = [F(z,0)]^{N(0)} = z^{N(0)}$$

[see (*7*)]. Thus, $\Phi(z,t)$ is the generating function of the state probabilities for a population initialized at $N(0)$ members. The fact that Φ equals $F^{N(0)}$ implies that the random variable corresponding to Φ [i.e., the population with initial size $N(0)$] is expressible as the sum of $N(0)$ independent random variables, each corresponding to F [i.e., $N(0)$ populations with initial size 1]. This is the additivity property remarked on earlier in this chapter.

21.8 Show that the interarrival time in a Poisson birth process with birth rate λ is exponentially distributed with parameter λ.

Designate the time of the *first* birth by T, a random variable. The population will still have its initial size, $N(0)$, at time t if and only if $T > t$. Hence, by (*21.10*),

$$\begin{aligned} P(T \le t) &= 1 - P(T > t) = 1 - P[N(t) = N(0)] \\ &= 1 - p_{N(0)}(t) = 1 - e^{-\lambda t} \end{aligned}$$

i.e., T has an exponential distribution, with parameter λ. Now, the probability distribution governing births in a time interval is independent of the starting point of the interval (the first assumption of a generalized Markovian birth-death process) and independent of the state of the process (the basic Poisson assumption). Consequently, T also measures the time from *now* until the *next* birth. In particular, if *now* is *this birth*, T measures the interarrival time.

21.9 A linear Markovian birth process, with birth rate λ, begins with a population $N(0) = 1$. (*a*) Find the expected time until the population size first equals n ($n = 2, 3, \ldots$). (*b*) Is the time calculated in (*a*) the same as the time at which the expected size of the population becomes equal to n?

(*a*) The population first reaches n in the infinitesimal time interval $(t, t + dt]$ if and only if the state is $n - 1$ at time t [with probability $p_{n-1}(t)$] *and* there is exactly one birth in $(t, t + dt]$ [with probability $(n - 1)\lambda\, dt + o(dt)$]. Hence, the desired expected value is

$$\int_0^\infty t p_{n-1}(t)(n-1)\lambda\, dt = \frac{1}{\lambda}\sum_{j=1}^{n-1}\frac{1}{j}$$

(The calculation is most easily effected by multiplying the Kolmogorov equation for dp_k/dt by t, integrating by parts, using (*21.2*) with the substitution $z = 1 - e^{-\lambda t}$ to evaluate the integral of $p_k(t)$, and solving the resulting difference equation.) The result has a simple interpretation: The expected time to the first birth is $1/\lambda$. Now the population is 2, with an effective birth rate 2λ; hence, the expected additional time to the next birth is $1/2\lambda$. And so on.

(*b*) According to (*21.3*), the expected size of the population equals n when

$$e^{\lambda t} = n \qquad \text{or} \qquad t = \frac{1}{\lambda}\ln n$$

which is not the same as the expected time found in (*a*). For large n,

$$\sum_{j=1}^{n-1}\frac{1}{j} \approx \ln n + \gamma$$

where $\gamma = 0.5772157\cdots$ is *Euler's constant*. Hence, the percent difference between the two times becomes very small.

Supplementary Problems

21.10 A linear Markovian birth process initialized at one member experiences an average daily birth rate $\lambda = 0.3$. Determine the probability of having a population larger than five members after 1 week. What is the expected size of the population at that time? What would the expected size of the population be after 1 week if it began with 10 members?

21.11 Solve Problem 21.10 if $\lambda = 0.6$.

21.12 Solve Problem 21.10 if the process is a Poisson birth process.

21.13 A linear Markovian birth process initialized at 15 members has an average hourly birth rate $\lambda = 0.1$. What is the expected size of the population after 3 h?

21.14 A car company judges that, in the range 40 000 to 300 000 cars, sales for a new model follow a linear Markovian birth process. If, on the average, every 50 new cars on the road generates one new buyer each day, how many new models can the company expect to sell 60 days after it sells its 40 000th vehicle?

21.15 An advertisement for salespeople is placed in a newspaper by a department store. Based on previous experience, the store expects applications to arrive according to a Poisson distribution at an average rate of two per day, for as long as the ad runs. How many days should the ad run if the store wants to guarantee with 98 percent certainty that it will receive at least six applications?

21.16 Each Monday morning, 15 min before the scheduled opening of a local bank, patrons line up at the door to transact business. The arrival pattern appears to follow a Poisson distribution, with $\lambda = 40$ customers per hour. Determine the probability that there are fewer than five pople in line at opening time, assuming that no patron leaves the line once he or she arrives.

21.17 A linear Markovian death process initialized at five members experiences an average daily death rate $\mu = 0.1$. Determine the probability of having fewer than three members in the population after a week. What is the expected size of the population at that time?

21.18 Solve Problem 21.17 if $\mu = 0.2$.

21.19 Solve Problem 21.17 if the process is a Poisson death process.

21.20 It is the practice on election day to allow anyone to vote who is on line at the time polls are scheduled to close. At a particular polling place, the time it takes an individual to vote appears to follow an exponential distribution, with an expected value 1.5 min. What is the probability that it will take more than 12 min to accommodate those waiting to vote at the scheduled closing, if the line numbers eight people? (*Hint*: Theorem 21.1 extends to Poisson death processes.)

21.21 A linear Markovian birth-death process initialized at one member has a daily average birth rate $\lambda = 0.05$ and a daily average death rate $\mu = 0.03$. Determine the probability that the population will be extinct after 4 days.

21.22 Solve Problem 21.21 if both λ and μ are doubled.

21.23 The population growth of an endangered species appears to follow a linear Markovian birth-death process. On the average, two members of the species produce one offspring every other year. The average life span of a member of the species is $3\frac{1}{2}$ years. What is the expected size of the population in 20 years, if the current population numbers 100?

21.24 Derive (*21.9*) by first solving the Kolmogorov equations for $p_0(t)$ and then successively for $p_1(t), p_2(t), \ldots$.

21.25 Solve Problem 21.9 for a Poisson birth process. Assume an initial population of zero.

21.26 Two independent Poisson birth processes run concurrently. Show that the result is a Poisson birth process, with a birth rate that is the sum of the two birth rates.

Chapter 22

Queueing Systems

INTRODUCTION

A queueing process consists in customers arriving at a service facility, then waiting in a line (*queue*) if all servers are busy, eventually receiving service, and finally departing from the facility. A *queueing system* is a set of customers, a set of servers, and an order whereby customers arrive and are processed. Figure 22-1 depicts several queueing systems.

A queueing system is a birth-death process with a population consisting of customers either waiting for service or currently in service. A birth occurs when a customer arrives at the service facility; a death occurs when a customer departs from the facility. The state of the system is the number of customers in the facility.

QUEUE CHARACTERISTICS

Queueing systems are characterized by five components: the arrival pattern of customers, the service pattern, the number of servers, the capacity of the facility to hold customers, and the order in which customers are served.

ARRIVAL PATTERNS

The arrival pattern of customers is usually specified by the *interarrival time*, the time between successive customer arrivals to the service facility. It may be deterministic (i.e., known exactly), or it may be a random variable whose probability distribution is presumed known. It may depend on the number of customers already in the system, or it may be state-independent.

Also of interest is whether customers arrive singly or in batches and whether balking or reneging is permitted. *Balking* occurs when an arriving customer refuses to enter the service facility because the queue is too long. *Reneging* occurs when a customer already in a queue leaves the queue and the facility because the wait is too long. Unless stated to the contrary, the standard assumption will be made that all customers arrive singly and that neither balking nor reneging occurs.

SERVICE PATTERNS

The service pattern is usually specified by the *service time*, the time required by one server to serve one customer. The service time may be deterministic, or it may be a random variable whose probability distribution is presumed known. It may depend on the number of customers already in the facility, or it may be state-independent. Also of interest is whether a customer is attended completely by one server or, as in Fig. 22-1(*d*), the customer requires a sequence of servers. Unless stated to the contrary, the standard assumption will be made that one server can completely serve a customer.

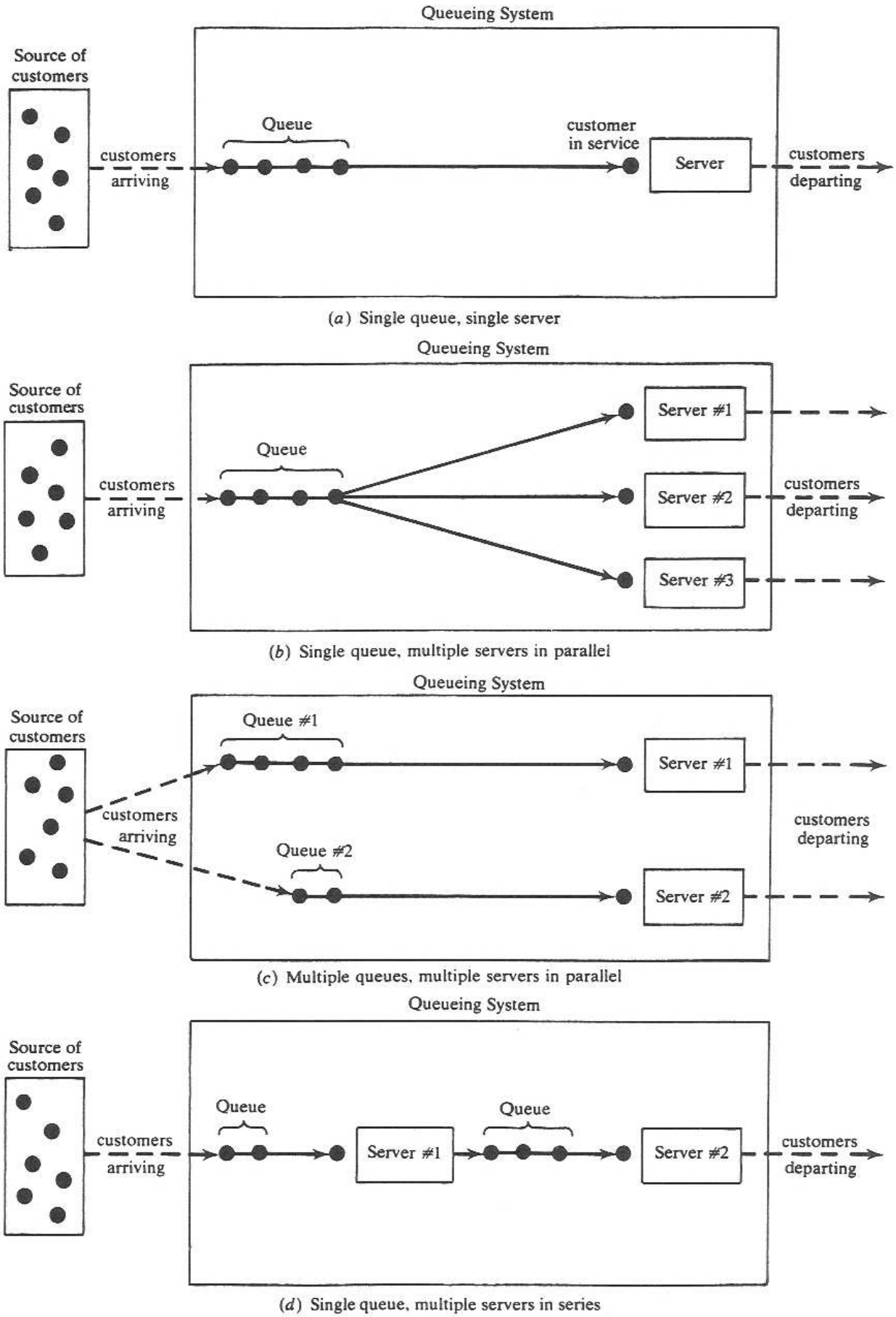

(*a*) Single queue, single server

(*b*) Single queue, multiple servers in parallel

(*c*) Multiple queues, multiple servers in parallel

(*d*) Single queue, multiple servers in series

Fig. 22-1

SYSTEM CAPACITY

The *system capacity* is the maximum number of customers, both those in service and those in the queue(s), permitted in the service facility at the same time. Whenever a customer arrives at a facility that is full, the arriving customer is denied entrance to the facility. Such a customer is not allowed to wait outside the facility (since that effectively increases the capacity) but is forced to leave without receiving service. A system that has no limit on the number of customers permitted inside the facility has *infinite capacity*; a system with a limit has *finite capacity*.

QUEUE DISCIPLINES

The *queue discipline* is the order in which customers are served. This can be on a first-in, first-out (FIFO) basis (i.e., service in order of arrival), a last-in, first-out (LIFO) basis (i.e., the customer who arrives last is the next served), a random basis, or a priority basis.

KENDALL'S NOTATION

Kendall's notation for specifying a queue's characteristics is v/w/x/y/z, where v indicates the arrival pattern, w denotes the service pattern, x signifies the number of available servers, y represents the system's capacity, and z designates the queue discipline. Various notations used for three of the components are listed in Table 22-1. If y or z is not specified, it is taken to be ∞ or FIFO, respectively.

Example 22.1 An M/D/2/5/LIFO system has exponentially distributed interarrival times, deterministic service times, two servers, and a limit of five customers allowed into the service facility at any one time, with the last customer to arrive being the next customer to go into service. A D/D/1 system has both deterministic interarrival times and deterministic service times, and only one server. Since system capacity and queue discipline are not specified, they are assumed to be infinite and FIFO, respectively.

Table 22-1

Queue Characteristic	Symbol	Meaning
Interarrival time or Service time	D	Deterministic
	M	Exponentially distributed
	E_k	Erlang-type-k ($k = 1, 2, \ldots$) distributed
	G	Any other distribution
Queue discipline	FIFO	First in, first out
	LIFO	Last in, first out
	SIRO	Service in random order
	PRI	Priority ordering
	GD	Any other specialized ordering

Solved Problems

22.1 Identify the customers, the servers, and those queue characteristics that are apparent, in a single-lane, automatic car wash establishment.

Customers are the cars entering the establishment for the purpose of being washed. A *server* is the machinery that does the cleaning, and the single lane indicates one or more servers in series.

Generally, car washes operate on a first-come, first-served basis; so the *queue discipline* is FIFO. The *system capacity* is the number of cars that can be safely handled on car wash grounds. If additional cars are allowed to wait on public streets for eventual entrance into the car wash grounds, then the system capacity is infinite.

22.2 Identify the customers, the servers, and those queue characteristics that are apparent, in the billing department of a large store.

Customers are the charges made by patrons of the store, after these charges are received by the billing department but before they are completely processed. The *servers* are the individuals in the billing department who do the processing.

Invoice processing often follows a LIFO *queue discipline* in that the last charge received by the billing department is placed on the top of the unprocessed pile and is then the first charge taken for processing by an idle server. Generally, there is no limit to the number of charges that can be forwarded to the billing department; hence the *system capacity* is infinite.

22.3 A new television set arrives for inspection every 3 min and is taken by a quality control engineer on a first-come, first-served basis. There is only one engineer on duty, and it takes exactly 4 min to inspect each new set. Determine the average number of sets waiting to be inspected over the first half-hour of a shift, if there are no sets awaiting inspection at the beginning of the shift.

This is a D/D/1 system, with television sets as customers and the engineer as the single server. The interarrival time is exactly 3 min, while the service time is exactly 4 min.

Table 22-2 charts the history of the system over the first half-hour of operation. Only those instants at which a change occurs in the state of the system (through a customer arrival or a serive completion) are surveyed. Observe that there are no customers in the queue from time 0 to 6, 7 to 9, and 11 to 12, for a total of 9 min. There is one customer in the queue from time 6 to 7, 9 to 11, 12 to 18, 19 to 21, and 23 to 24, for a total of 12 min. Similarly, there are two customers in the queue from time 18 to 19, 21 to 23,

Table 22-2

Simulated Clock, min	Customer in Service	Queue
0	...	...
3	#1	...
6	#1	#2
7	#2	...
9	#2	#3
11	#3	...
12	#3	#4
15	#4	#5
18	#4	#5, #6
19	#5	#6
21	#5	#6, #7
23	#6	#7
24	#6	#7, #8
27	#7	#8, #9
30	#7	#8, #9, #10

and 24 to 30, for a total of 9 min; and three customers in the queue from time 30 to 30, for a total of 0 min. The average length of the queue, which is the average number of sets waiting to be inspected, over the first half-hour is then

$$\frac{0(9) + 1(12) + 2(9) + 3(0)}{30} = 1 \text{ set}$$

22.4 Buses arrive for cleaning at a central depot in groups of five every hour on the hour. The buses are serviced in random order, one at a time. Each bus requires 11 min to service completely, and it leaves the depot as soon as it is clean. Determine (*a*) the average number of buses in the depot, (*b*) the average number of buses waiting to be cleaned, and (*c*) the average time a bus spends in the depot.

This is a deterministic system, with buses as customers and the cleaning crew as the single server. Arrivals occur once an hour but in batches; the service time is 11 min. A bus is in service while it is being cleaned.

Table 22-3 charts the history of the system over a 1-h period, at the epochs of arrivals and departures. Since service is provided on a random ordering basis, the particular sequence shown is one of many possible sequences for processing buses through the depot. The required statistics, however, are independent of the sequence. Furthermore, since the system renews itself each hour, the statistics that characterize the system over the first hour also are valid over the long run.

Table 22-3

Simulated Clock, min	Customer in Service	Queue
0	#4	#3, #1, #2, #5
11	#1	#3, #2, #5
22	#5	#3, #2
33	#3	#2
44	#2	...
55	...	...

(*a*) There are five customers in the facility from time 0 to 11, 4 customers from 11 to 22, 3 customers from 22 to 33, 2 customers from 33 to 44, and 1 customer from 44 to 55, each interval being 11 min. In addition, there are no customers in the facility from time 55 to 60, or 5 min. The average number of customers in the facility is then

$$\frac{5(11) + 4(11) + 3(11) + 2(11) + 1(11) + 0(5)}{60} = 2.75 \text{ buses}$$

(*b*) The average number of customers in the queue, those buses waiting for but not yet in service, is

$$\frac{4(11) + 3(11) + 2(11) + 1(11) + 0(16)}{60} = 1.83 \text{ buses}$$

(*c*) One bus, bus #4 in Table 22-3, is in the system for 11 min, since it is serviced as soon as it arrives. A second bus, bus #1 in Table 22-3, waits for 11 min before it is serviced, so it is in the system for 22 min. Similarly, the other three buses spend 33, 44, and 55 min, respectively, in the system. The average time a bus spends in the depot is therefore

$$\frac{11 + 22 + 33 + 44 + 55}{5} = 33 \text{ min}$$

Table 22-4

Simulated Clock min:sec	Customers in Service		Queue
	Server I	Server II	
00:00	···	···	···
3:54	#1	···	
6:05	#1	#2	···
7:31	#1	#2	#3
8:54	#3	#2	···
8:56	#3	#2	#4
9:01	#3	#2	#4 ← #5
13:05	#3	#4	···
13:54	···	#4	···
14:25	#6	#4	···
19:25	···	#4	···
20:05	···	···	···
20:34	#7	···	···
21:31	#7	#8	···
22:45	#7	#8	#9
25:34	#9	#8	···
28:31	#9	···	···
28:42	#9	#10	···
30:01	#9	#10	#11
30:34	#11	#10	···
32:40	#11	#10	#12
33:32	#11	#10	#12 ← #13
35:34	#12	#10	···
35:42	#12	···	···
40:34	···	···	···
42:26	#14	···	···
45:00	#14	···	···

22.5 Simulate an M/D/2/3 system over the first 45 min of operation, if the mean interarrival time is 3 min and if it takes servers I and II exactly 5 and 7 min, respectively, to serve a customer. Assume that there are no customers in the system at the beginning.

If an exponentially distributed random variable has a mean (expected value) of 3, then the distribution function, (*21.13*), has 1/3 as its parameter. Using a random number generator to create values (in minutes and seconds) obeying such a distribution, we obtain: 3:54, 2:11, 1:26, 1:25, 0:05, 5:24, 6:09, 0:57, 1:14, 5:57, 1:19, 2:39, 0:52, 8:54, 2:49. We take successive values to be the interarrival times of successive customers. Thus, customer #1 enters the system 3 min and 54 s after the process begins, customer #2 enters the system 2 min and 11 s after customer 1, and so on.

The queueing process is charted in Table 22-4 for the first 45 min of operation, with only those times at which a customer arrives or departs surveyed. Observe that, at time 9:01, customers #2 and #3 are in service, customer #4 is in the queue awaiting service, and customer #5 arrives. Since the system's capacity is 3, customer #5 is denied entrance and never receives service. A similar situation occurs at time 33:32.

Supplementary Problems

Identify (*a*) the customers, (*b*) the server(s), and (*c*) those queue characteristics that are apparent, for the systems described in Problems 22.6 through 22.13.

22.6 A one-counter cafeteria.

22.7 A barber shop with two barbers, four chairs for waiting, and a local fire ordinance that sets the maximum number of customers in the shop at seven.

22.8 A self-service gasoline station with three pumps.

22.9 Airplanes requesting permission to land at a small airport.

22.10 Automobiles at a toll plaza.

22.11 Work forwarded to a typing pool.

22.12 Combat troops awaiting transportation to a rest and recreation site.

22.13 A municipal judge hearing civil cases in court.

22.14 Patients are scheduled for a certain test at a clinic every 5 min, beginning at 9:00 A.M. The test takes exactly 8 min to complete and is normally administered by a single doctor hired for this purpose. Whenever three or more patients are in the waiting room, a second doctor at the clinic also administers the test, and continues to do so until the waiting room is empty upon his completing a test. At that point, this second doctor takes up his previous duties until his services are required again. (*a*) At what time does the second doctor first begin administering tests and when does he first stop? (*b*) What is the average number of patients in the waiting room from 9:00 to 10:00 A.M.? (*c*) What is the average number of patients in the clinic from 9:00 to 10:00 A.M.?

22.15 Jobs arrive at a work center three at a time, every 15 min. The center is staffed by one employee who takes exactly 6 min to complete each job. Jobs that are not being processed by the employee are stored at the work center and are then taken in random order. Assume that jobs begin arriving as soon as the employee reports for work and that initially there are no jobs awaiting processing from a previous shift. (*a*) What is the average number of jobs in the work center during the first 2 h of the employee's shift? (*b*) How long will the queue be after an 8-h shift?

22.16 An orthodontist schedules patients for a routine checkup every 15 min and limits the total number of patients to 10 a day. It takes 12 min to examine the first patient but, because the dentist tires quickly, each subsequent examination takes 1 min longer than the one before it. Determine the average time that a patient spends in the dentist's office, both waiting and being examined, assuming that each patient arrives precisely when scheduled.

22.17 How many customers are denied entrance to a D/D/1/3 queueing system in the first hour, if customers arrive every 4 min for a service that requires 8 min to provide? Assume that the first customer arrives as soon as the service facility is opened.

Chapter 23

M/M/1 Systems

SYSTEM CHARACTERISTICS

An M/M/1 system is a queueing system having exponentially distributed interarrival times, with parameter λ; exponentially distributed service times, with parameter μ; one server; no limit on the system capacity; and a queue discipline of first come, first served. The constant λ is the *average customer arrival rate*; the constant μ is the *average service rate* of customers. Both are in units of customers per unit time. The expected interarrival time and the expected time to serve one customer are $1/\lambda$ and $1/\mu$, respectively.

Since exponentially distributed interarrival times with mean $1/\lambda$ are equivalent, over a time interval τ, to a Poisson-distributed arrival pattern with mean $\lambda\tau$ (see Theorem 21.1), M/M/1 systems are often referred to as single-server, infinite-capacity, queueing systems having Poisson input and exponential service times.

THE MARKOVIAN MODEL

An M/M/1 system is a Poisson birth-death process (see Chapter 21). The probability, $p_n(t)$, that the system has exactly n customers, either waiting for service or in service, at time t satisfies the Kolmogorov equations, *(21.1)*, with $\lambda_n = \lambda$ and $\mu_n = \mu$, for all n. The complete solution of these equations, while possible, is largely unnecessary. As in Chapter 19, it is the limiting distribution that is of greatest interest.

STEADY-STATE SOLUTIONS

The *steady-state probabilities* for a queueing system are

$$p_n \equiv \lim_{t \to \infty} p_n(t) \qquad (n = 0, 1, 2, \ldots) \tag{23.1}$$

if the limits exist. For an M/M/1 system, we define the *utilization factor* (or *traffic intensity*) as

$$\rho \equiv \frac{\lambda}{\mu} \tag{23.2}$$

i.e., ρ is the expected number of arrivals per mean service time. If $\rho < 1$, then (Problem 23.7) steady-state probabilities exist and are given by

$$p_n = \rho^n(1 - \rho) \tag{23.3}$$

If $\rho > 1$, the arrivals come at a faster rate than the server can accommodate: the expected queue length increases without limit and a steady state does not occur. A similar situation prevails when $\rho = 1$.

MEASURES OF EFFECTIVENESS

For a queueing system in steady state, the measures of greatest interest are:

$L \equiv$ the average number of customers in the system
$L_q \equiv$ the average length of the queue

$W \equiv$ the average time a customer spends in the system
$W_q \equiv$ the average time a customer spends (or waits) in the queue
$W(t) \equiv$ the probability that a customer spends more than t units of time in the system
$W_q(t) \equiv$ the probability that a customer spends more than t units of time in the queue

The first four of these measures are related in many queueing systems by

$$W = W_q + \frac{1}{\mu} \tag{23.4}$$

and by *Little's formulas* (Problem 23.10)

$$L = \bar{\lambda} W \tag{23.5}$$

$$L_q = \bar{\lambda} W_q \tag{23.6}$$

The waiting-time formula, (*23.4*), holds whenever (as in an M/M/1 system) there is a single expected service time, $1/\mu$, for all customers. Little's formulas are valid for quite general systems, provided that $\bar{\lambda}$ denotes the average arrival rate of customers *into* the service facility.

For an M/M/1 system, $\bar{\lambda} = \lambda$, and the six measures are explicitly:

$$L = \frac{\rho}{1-\rho} \tag{23.7}$$

$$L_q = \frac{\rho^2}{1-\rho} \tag{23.8}$$

$$W = \frac{1}{\mu - \lambda} \tag{23.9}$$

$$W_q = \frac{\rho}{\mu - \lambda} \tag{23.10}$$

$$W(t) = e^{-t/W} \qquad (t \geq 0) \tag{23.11}$$

$$W_q(t) = \rho e^{-t/W} \qquad (t \geq 0) \tag{23.12}$$

Observe from (*23.12*) that although the time spent in the system has the exponential distribution (*23.11*), and the time spent in service is also exponentially distributed, the difference of these two times, which is the time spent in the queue, is *not* exponentially distributed.

Solved Problems

23.1 Show that "most of" the values of an exponentially distributed random variable are smaller than the mean value.

If T has an exponential distribution, with parameter β, the mean value of T is $1/\beta$. From (*21.13*),

$$P(T \leq 1/\beta) = 1 - e^{-1} \approx 0.632$$

$$P(T \leq 1/2\beta) = 1 - e^{-1/2} \approx 0.393$$

Thus we might say that 63 percent of the values are smaller than the mean, and, of *those* values, some 63 percent are smaller than half the mean.

23.2 Discuss the implications of having both the service times and the interarrival times exponentially distributed.

By Problem 23.1, exponentially distributed service times imply a preponderance of shorter-than-average servicings, combined with a few long ones. This would be the situation, for example, at banks where a majority of customers make simple deposits requiring very little teller time, but a few have more complicated transactions that consume a lot of time. Such distributions do not model satisfactorily situations where the service is essentially identical for each customer, as in work on an assembly line.

Exponentially distributed interarrival times imply a preponderance of interarrival times that are less than the average, with a few that are very long. The net result is that a number of customers arrive in a short period of time, thereby creating a queue, which is followed eventually by a long interval during which no new customer arrives, allowing the server to reduce the size of the queue.

As was shown in Problem 21.8, exponential distributions also possess the Markovian (or *memoryless*) property:

$$P(T \le a + b \mid T > a) = P(T \le b)$$

When T measures interarrival times, the implication is that the time to the next arrival is independent of the time since the last arrival. For service times, the implication is that the time required to complete service on a customer cannot be predicted by knowing (i.e., is independent of) the time the customer has already been in service.

23.3 The men's department of a large store employs one tailor for customer fittings. The number of customers requiring fittings appears to follow a Poisson distribution with mean arrival rate 24 per hour. Customers are fitted on a first-come, first-served basis, and they are always willing to wait for the tailor's service, because alterations are free. The time it takes to fit a customer appears to be exponentially distributed, with a mean of 2 min. (*a*) What is the average number of customers in the fitting room? (*b*) How much time should a customer expect to spend in the fitting room? (*c*) What percentage of the time is the tailor idle? (*d*) What is the probability that a customer will wait more than 10 min for the tailor's service?

This is an M/M/1 system, with $\lambda = 24\ \mathrm{h}^{-1}$,

$$\mu = \tfrac{1}{2}\ \mathrm{min}^{-1} = 30\ \mathrm{h}^{-1}$$

and $\rho = 24/30 = 0.8$.

(*a*) From (*23.7*),

$$L = \frac{0.8}{1 - 0.8} = 4 \text{ customers}$$

(*b*) From (*23.9*)

$$W = \frac{1}{30 - 24} = \tfrac{1}{6}\ \mathrm{h} = 10\ \mathrm{min}$$

The result also follows from (*23.5*):

$$W = \frac{1}{\lambda} L = \frac{1}{24}(4) = \tfrac{1}{6}\ \mathrm{h}$$

(*c*) The tailor is idle if and only if there is no customer in the fitting room. The probability of this event is given by (*23.3*) as

$$p_0 = \rho^0(1 - \rho) = 1(1 - 0.8) = 0.2$$

The tailor is idle 20 percent of the time.

(*d*) From (*23.12*), with $t = 10\ \mathrm{min} = \frac{1}{6}\ \mathrm{h} = W$,

$$W_q(\tfrac{1}{6}) = (0.8)e^{-1} = 0.2943$$

23.4 For the system of Problem 23.3, determine (*a*) the average wait for the tailor's service experienced by all customers, (*b*) the average wait for the tailor's service experienced by those customers who have to wait at all.

(*a*) From (*23.10*),

$$W_q = \frac{\rho}{\mu - \lambda} = \frac{0.8}{30 - 24} = 0.133 \text{ h} = 8 \text{ min}$$

(*b*) Denote the desired average wait as W_q'. The proportion of arriving customers that have no wait is $1 - \rho$ [this being the probability that an arriving customer finds the system empty—see Problem 23.3(*c*)]. Hence, the average wait over all arriving customers is given by

$$W_q' = (1 - \rho)(0) + \rho W_q'$$

whence

$$W_q' = \frac{1}{\rho} W_q = \frac{1}{\mu - \lambda} = W = 10 \text{ min}$$

23.5 A gourmet delicatessen is operated by one person, the owner. The arrival pattern of customers on Saturdays appears to follow a Poisson distribution, with a mean arrival rate of 10 people per hour. Customers are served on a FIFO basis, and because of the reputation of the store they are willing to wait for service once they arrive. The time it takes to serve a customer is estimated to be exponentially distributed, with an average service time of 4 min. Determine (*a*) the probability that there is a queue, (*b*) the average size of the queue, (*c*) the expected time that a customer must wait in the queue, and (*d*) the probability that a customer will spend less than 12 min in the store.

This is an M/M/1 system, with

$$\lambda = 10 \text{ h}^{-1} = \tfrac{1}{6} \text{ min}^{-1} \qquad \mu = \tfrac{1}{4} \text{ min}^{-1} \qquad \rho = \frac{1/6}{1/4} = \frac{2}{3}$$

(*a*) The probability of having a queue is the probability of having two or more customers in the system. By (*23.3*),

$$p_0 = \rho^0(1 - \rho) = 1(1 - \tfrac{2}{3}) = \tfrac{1}{3} \qquad p_1 = \rho(1 - \rho) = \tfrac{2}{3}(1 - \tfrac{2}{3}) = \tfrac{2}{9}$$

Therefore, the probability of having a queue is

$$1 - p_0 - p_1 = 1 - \frac{1}{3} - \frac{2}{9} = \frac{4}{9}$$

(*b*) From (*23.8*),

$$L_q = \frac{(2/3)^2}{1 - (2/3)} = \frac{4}{3} \text{ customers}$$

(*c*) From (*23.10*),

$$W_q = \frac{2/3}{(1/4) - (1/6)} = 8 \text{ min}$$

(*d*) From (*23.4*) and (*23.11*),

$$W = 8 + 4 = 12 \text{ min}$$

$$1 - W(12) = 1 - e^{-12/12} = 1 - 0.3679 = 0.6321$$

23.6 Simulate the process described in Problem 23.5.

Two sets of exponentially distributed random numbers, one having parameter 1/6 (interarrival times) and the second having parameter 1/4 (service times), are listed in Table 23-1, with all values converted into minutes and seconds. As expected for exponential distributions, a majority of values in each set (10 out of 16, or 62.5 percent) are smaller than the theoretical means, 6 min for the interarrival times and 4 min for the service times. The sample averages for the times shown in Table 23-1 are 6 min 10 s for the interarrival times and 4 min 12 s for the service times.

Table 23-1

Interarrival Times	Service Times
3:30	0:16
3:30	0:01
6:36	2:37
11:45	10:19
5:32	11:53
4:27	2:57
8:17	1:02
15:24	4:03
3:29	0:59
3:12	0:09
2:01	9:57
13:37	3:44
0:40	7:12
0:12	0:10
2:42	11:51
13:43	0:04

Table 23-2

Simulated Clock	Customer in Service	Queue
00:00	...	...
3:30	#1 (0:16)	...
3:46	...	...
7:00	#2 (0:01)	...
7:01	...	...
13:36	#3 (2:37)	...
16:13	...	...
25:21	#4 (10:19)	...
30:53	#4 (4:47)	#5 (11:53)
35:20	#4 (0:20)	#5 (11:53), #6 (2:57)
35:40	#5 (11:53)	#6 (2:57)
43:37	#5 (3:56)	#6 (2:57), #7 (1:02)
47:33	#6 (2:57)	#7 (1:02)
50:30	#7 (1:02)	...
51:32	...	...
59:01	#8 (4:03)	
62:30	#8 (0:34)	#9 (0:59)
63:04	#9 (0.59)	...
64:03	...	...
65:42	#10 (0.09)	...
65:51	...	...
67:43	#11 (9:57)	...
77:40	...	...
81:20	#12 (3:44)	...
82:00	#12 (3:04)	#13 (7:12)
82:12	#12 (2:52)	#13 (7:12), #14 (0:10)
84:54	#12 (0:10)	#13 (7:12), #14 (0:10), #15 (11:51)
85:04	#13 (7:12)	#14 (0:10), #15 (11.15)
92:16	#14 (0:10)	#15 (11:51)
92:26	#15 (11:51)	...
98:37	#15 (5:40)	#16 (0:04)

We assign the first interarrival time and the first service time to customer #1, the second interarrival time and the second service time to customer #2, and so on. The queueing process is then charted in Table 23-2, where the simulated clock times listed are those at which a new customer or a current customer is completely served and departs. The times in parentheses are the amounts of service time still required by the corresponding customers.

Observe how the queue builds when a long service time is matched with a succession of short interarrival times, and how it ebbs when a long interarrival time allows the server to accommodate customers currently in the system. This ebb and flow of queue size is characteristic of M/M/1 systems when the mean service time is shorter than the mean interarrival time.

23.7 Derive (*23.3*), which gives the steady-state probabilities for an M/M/1 system having $\rho < 1$.

Equations (*21.1*), with $dp_n/dt = 0$ (steady state), $\mu_n = \mu$, and $\lambda_n = \lambda$, become the *balance equations*

$$p_{n+1} = (\rho + 1)p_n - \rho p_{n-1} \qquad (n = 1, 2, \ldots) \tag{1}$$

$$p_1 = \rho p_0 \tag{2}$$

Equation (*2*) gives p_1 in terms of p_0, and all other steady-state probabilities can also be obtained in terms of p_0 by solving (*1*) recursively:

$$\mathbf{n = 1:} \qquad p_2 = (\rho + 1)p_1 - \rho p_0 = (\rho + 1)(\rho p_0) - \rho p_0 = \rho^2 p_0$$

$$\mathbf{n = 2:} \qquad p_3 = (\rho + 1)p_2 - \rho p_1 = (\rho + 1)(\rho^2 p_0) - \rho(\rho p_0) = \rho^3 p_0$$

$$\mathbf{n = 3:} \qquad p_4 = (\rho + 1)p_3 - \rho p_2 = (\rho + 1)(\rho^3 p_0) - \rho(\rho^2 p_0) = \rho^4 p_0$$

and, in general,

$$p_n = \rho^n p_0 \tag{3}$$

Since the sum of the probabilities must equal unity and $0 < \rho < 1$,

$$1 = \sum_{n=0}^{\infty} p_n = p_0 \sum_{n=0}^{\infty} \rho^n = p_0\left(\frac{1}{1-\rho}\right)$$

Therefore, $p_0 = 1 - \rho$, and (*3*) becomes (*23.3*).

23.8 Derive (*23.7*).

Using the definition of expected value and the results of Problem 23.7, we calculate the expected number of customers in an M/M/1 system as

$$L = \sum_{n=0}^{\infty} np_n = \sum_{n=0}^{\infty} n(1-\rho)\rho^n = \rho(1-\rho)\sum_{n=0}^{\infty} n\rho^{n-1} = \rho(1-\rho)\frac{d}{d\rho}\left(\sum_{n=0}^{\infty}\rho^n\right)$$

$$= \rho(1-\rho)\frac{d}{d\rho}\left(\frac{1}{1-\rho}\right) = \rho(1-\rho)\frac{1}{(1-\rho)^2} = \frac{\rho}{1-\rho}$$

23.9 Derive (*23.4*).

Denote the time a customer spends in the system by T, the time spent in the queue by T_q, and the time spent being served by T_s. All three are random variables, with

$$T = T_q + T_s$$

Therefore,

$$E(T) = E(T_q) + E(T_s) \tag{1}$$

The expected service time is $E(T_s) = 1/\mu$. We are denoting $E(T)$ by W and $E(T_q)$ by W_q, so (*1*) coincides with (*23.4*).

23.10 Deduce Little's formulas intuitively.

During the "average customer's" time in the system, W, new customers arrive at an average rate λ; so, at the end of W time units, λW new customers are expected in the system. That is, as the original customer leaves the system, that customer can expect to see λW other customers remaining in the system. Since the queue statistics are independent of time in the steady state, $L = \lambda W$ always.

Equation (*23.6*) is deduced similarly, by replacing W, L, and the word "system" by W_q, L_q, and the word "queue," respectively, in the preceding paragraph.

23.11 For an M/M/1 system, does $L_q = L - 1$?

No:

$$L = \sum_{n=0}^{\infty} np_n = \sum_{n=1}^{\infty} np_n \qquad L_q = \sum_{n=2}^{\infty} (n-1)p_n = \sum_{n=1}^{\infty} (n-1)p_n$$

and so

$$L - L_q = \sum_{n=1}^{\infty} p_n = 1 - p_0 = \rho$$

23.12 Show that $S_k \equiv T_1 + T_2 + \cdots + T_k$, the sum of k mutually independent, exponentially distributed random variables, each with parameter μ, has the *Erland type k*, or *gamma*, distribution:

$$P(S_k \le t) = \int_0^t \frac{\mu^k \tau^{k-1}}{(k-1)!} e^{-\mu\tau}\, d\tau \qquad (t \ge 0) \tag{23.13}$$

Interpret the T-variables as the first k interarrival times in a Poisson birth process having initial population zero. Then the population at time t is k or more if and only if $S_k \le t$; that is,

$$P(S_k \le t) = P(N(t) \ge k) = \sum_{n=k}^{\infty} \frac{(\mu t)^n}{n!} e^{-\mu t} \tag{1}$$

where we have made use of (*21.9*), with λ replaced by μ.

One way to prove the equivalence of (*1*) and (*23.13*) is to show that they have the same first derivative (the probability density function for S_k) and the same value at $t = 0$ (which they obviously do). Differentiating (*23.13*),

$$f_k(t) = \frac{\mu^k t^{k-1}}{(k-1)!} e^{-\mu t}$$

Differentiating (*1*),

$$\begin{aligned} f_k(t) &= \sum_{n=k}^{\infty} \frac{\mu^n}{n!} (nt^{n-1} e^{-\mu t} - \mu t^n e^{-\mu t}) \\ &= \sum_{n=k}^{\infty} \frac{\mu^n t^{n-1}}{(n-1)!} e^{-\mu t} - \sum_{n=k}^{\infty} \frac{\mu^{n+1} t^n}{n!} e^{-\mu t} \\ &= \frac{\mu^k t^{k-1}}{(k-1)!} e^{-\mu t} \end{aligned}$$

and the proof is complete.

23.13 Derive (*23.12*).

To obtain the distribution of T_q, the time a customer spends in the queue of an M/M/1 system, use conditional probabilities (Problem 17.5). If an arriving customer finds the system in state 0, then $T_q = 0$; if the customer finds the system in state k ($k = 1, 2, \ldots$), then, because of the memoryless property (Problem 23.2), of the current service time, $T_q = S_k$ (see Problem 23.12). Consequently, for $t \ge 0$,

$$W_q(t) \equiv P(T_q > t) = 1 - P(T_q \le t) = 1 - \left[p_0 P(0 \le t) + \sum_{k=1}^{\infty} p_k P(S_k \le t) \right]$$

$$= 1 - \left[(1-\rho)(1) + \sum_{k=1}^{\infty} \rho^k (1-\rho) \int_0^t \frac{\mu^k \tau^{k-1}}{(k-1)!} e^{-\mu\tau}\, d\tau \right]$$

$$= \rho - \rho\mu(1-\rho) \int_0^t \left[\sum_{k=1}^{\infty} \frac{(\mu\rho\tau)^{k-1}}{(k-1)!} \right] e^{-\mu\tau}\, d\tau = \rho - \rho\mu(1-\rho) \int_0^t e^{\mu\rho\tau} e^{-\mu\tau}\, d\tau$$

$$= \rho - \rho\mu(1-\rho) \int_0^t e^{-\mu(1-\rho)\tau}\, d\tau = \rho e^{-\mu(1-\rho)t} = \rho e^{-cW}$$

Supplementary Problems

23.14 The take-out counter at an ice cream parlor is serviced by one attendant. Customers arrive according to a Poisson process, at a mean arrival rate of 30 per hour. They are served on a FIFO basis, and, because of the quality of the ice cream, they are willing to wait if necessary. The service time per customer appears to be exponentially distributed, with a mean of $1\frac{1}{2}$ min. Determine (*a*) the average number of customers waiting for service, (*b*) the amount of time a customer should expect to wait for service, (*c*) the probability that a customer will have to spend more than 15 min in the queue, and (*d*) the probability that the service is idle.

23.15 A barber runs a one-man shop. He does not make appointments but attends customers on a first-come, first-served basis. Because of the barber's reputation, customers are willing to wait for service once they arrive; arrivals follow a Poisson pattern, with a mean arrival rate of two per hour. The barber's service time appears to be exponentially distributed, with a mean of 20 min. Determine (*a*) the expected number of customers in the shop, (*b*) the expected number of customers waiting for service, (*c*) the average time a customer spends in the shop, and (*d*) the probability that a customer will spend more than the average amount of time in the shop.

23.16 The arrival pattern of cars to a single-lane, drive-in window at a bank appears to be a Poisson process, with a mean rate of one per minute. Service times by the teller appear to be exponentially distributed, with a mean of 45 s. Assuming that an arriving car will wait as long as necessary, determine (*a*) the expected number of cars waiting for service, (*b*) the average time a car waits for service, (*c*) the average time a car spends in the system, and (*d*) the probability that there will be cars waiting in the street if bank grounds can hold a maximum of five automobiles.

23.17 Aircraft request permission to land at a single-runway airport on an average of one every 5 min; the actual distribution appears to be Poisson. Planes are landed on a first-come, first-served basis, with those not able to land immediately due to traffic congestion put in a holding pattern. The time required by the traffic controller to land a plane varies with the experience of the pilot; it is exponentially distributed, with a mean of 3 min. Determine (*a*) the average number of planes in a holding pattern, (*b*) the average number of planes that have required permission to land but are still in motion, (*c*) the probability that an arriving plane will be on the ground in less than 10 min after first requesting permission to land, and (*d*) the probability that there are more than three planes in a holding pattern.

23.18 A typist receives work according to a Poisson process, at an average rate of four jobs per hour. Jobs are typed on a first-come, first-served basis, with the average job requiring 12 min of the typist's time; the actual time per job appears to be exponentially distributed about this mean. Determine (*a*) the probability that an arriving job will be completed in under 45 min, (*b*) the probability that all jobs will have been completed by the typist at the end of the business day, and (*c*) the probability that a job will take less than 12 min to complete once the typist begins it.

23.19 As mechanics need parts for automobiles they are servicing in a repair shop, they go to the parts department of the shop and requisition the needed material. Mechanics are accommodated by the single attendant in the parts department on a first-come, first-served basis. Mechanics arrive according to a Poisson process, with a mean rate of 35 per hour, and they wait their turn whenever the parts attendant is busy with someone else. On the average, it takes the parts attendant 1 min to serve a mechanic, with the actual service time exponentially distributed about this mean. What is the expected hourly cost to the repair shop to have its mechanics obtain parts, if a mechanic is paid \$12 an hour?

23.20 Buses arrive at a service facility according to a Poisson process, at a mean rate of 10 per day. The facility can service only one bus at a time, the service time being exponentially distributed about a mean of 1/12 day. It costs the bus company \$200 a day to operate the service facility and \$50 for each day a bus is tied up in the facility. By purchasing newer equipment that will raise the daily operating cost of the service facility to \$245, the bus company can decrease the mean service time to 1/15 day. Is such an update economically attractive?

23.21 Jobs arrive at an inspection station according to a Poisson process, at a mean rate of two per hour, and are inspected one at a time on a FIFO basis. The quality control engineer both inspects and makes minor adjustments, if that is all that is required to pass a job through this phase. The total service time per job appears to be exponentially distributed, with a mean of 25 min. Jobs that arrive but cannot be inspected immediately by the engineer must be stored until the engineer is free to take them. Each job requires 10 ft^2 of floor space while it is in storage. How much floor space should be provided, if the objective is to have sufficient storage space within the quality control section 90 percent of the time?

23.22 Determine the effect on L, L_q, and W of doubling both λ and μ in an M/M/1 system.

23.23 Find the conditional probability that there are $n \geq 2$ customers in an M/M/1 system, given that there is a queue.

23.24 Determine the expected number of customers in the queue of an M/M/1 system when there is a queue. (*Hint*: Use the results of Problem 23.23.)

23.25 Derive (*23.8*) without the use of Little's formula, by calculating directly the expected number of customers in the queue.

23.26 Derive the balance equations (see Problem 23.7) directly by using the fact that in the steady state the expected rate of transitions of the system into state n must equal the expected rate of transitions out of state n. (Note that the expected rates of *customers* into and out of state n, $\lambda_n = \lambda$ and $\mu_n = \mu$, are not in general equal.)

23.27 Use the generating function approach suggested in Problem 2.17 to solve the balance equations for an M/M/1 system.

23.28 Without using Problem 23.26, verify that the mean rate of departure from a steady-state M/M/1 system equals the mean rate of arrival into the system.

Chapter 24

Other Systems with Poisson-Type Input and Exponential-Type Service Times

STATE-DEPENDENT PROCESSES

In many queueing situations, the number of customer arrivals does not constitute a strict Poisson process, with constant parameter λ; instead, it seems to follow a Poisson-like process in which λ varies according to the number of customers in the system. It may also be the case that departures from the system do not occur at a constant mean rate μ, as they would for a single server with an exponentially distributed service time; rather, the departures are as though there were a single server having an exponential-like service time distribution for which μ varies according to the state of the system. Such queueing processes can be modeled as generalized Markovian birth-death processes (Chapter 21), for which $\lambda_n \Delta t$ and $\mu_n \Delta t$ give, respectively, the expected number of arrivals and departures in a small time interval Δt, if the system is in state n at the beginning of the interval. The steady-state probabilities for these processes are found to satisfy

$$p_n = \frac{\lambda_{n-1}}{\mu_n} p_{n-1} \qquad \text{or} \qquad p_n = \frac{\lambda_{n-1}\lambda_{n-2}\cdots\lambda_0}{\mu_n\mu_{n-1}\cdots\mu_1} p_0 \tag{24.1}$$

in which p_0 is determined by the condition that the sum of all the probabilities be unity. This sum converges provided the λ's are not too large with respect to the μ's. In particular, the existence of a steady state is assured if

$$\frac{\lambda_{n-1}}{\mu_n} \le \theta < 1$$

for all large n.

LITTLE'S FORMULAS

Little's formulas, (*23.5*) and (*23.6*), hold for the above-described processes, where

$$\bar{\lambda} = \sum_{n=0}^{\infty} \lambda_n p_n \tag{24.2}$$

is the average arrival rate of customers *into* the service facility.

In any queueing system, the expected number of customers in the system is

$$L = \sum_{n=0}^{\infty} n p_n$$

and the expected number of customers in the queue is

$$L_q = \sum_{n=0}^{\infty} [\max\{n - s_n, 0\}] p_n$$

where s_n is the number of servers available in state n. If it is possible to evaluate L and L_q, then, knowing $\bar{\lambda}$, we can at once find W and W_q from Little's formulas.

BALKING AND RENEGING

A balk occurs when a customer *arrives at* but refuses to *enter into* a service facility, because the queue is too long. Designate the probability that an arriving customer will balk when there are n customers already in the system by the *balking function* $b(n)$. The probability that an arriving customer will not balk is then $1 - b(n)$. If the arrival pattern *to* the service facility is state-independent, with mean arrival rate λ, then the expected rate of customers *into* the service facility is

$$\lambda_n = [1 - b(n)]\lambda \tag{24.3}$$

which is state-dependent. (See Problem 24.4.)

Reneging occurs when a customer leaves the queue after joining it, because the waiting time for service has become too long. The net effect is to increase the rate at which customers are processed through the system. An M/M/1 system with reneging is modeled by a state-dependent process for which

$$\mu_n = \mu + r(n) \tag{24.4}$$

Here, $r(n)$ is a *reneging function* defined by

$$r(n) \equiv \lim_{\Delta t \to 0} \frac{P\{\text{a customer reneges in a time interval } \Delta t \mid n \text{ customers in the system}\}}{\Delta t}$$

Since no reneging occurs when there is no queue, $r(0) = r(1) = 0$. (See Problem 24.10.)

M/M/s SYSTEMS

An M/M/s system is a queueing process having a Poisson arrival pattern; s servers, with s independent, identically distributed, exponential service times (which do not depend on the state of the system); infinite capacity; and a FIFO queue discipline. The arrival pattern being state-independent, $\lambda_n = \lambda$ for all n. The service times associated with *each server* are also state-independent; but since the number of servers that actually attend customers (i.e., are not idle) *does* depend on the number of customers in the system, the effective time it takes the *system* to process customers through the service facility is state-dependent. In particular, if $1/\mu$ is the mean service time for one server to handle one customer, then the mean rate of service completions when there are n customers in the system is

$$\mu_n = \begin{cases} n\mu & (n = 0, 1, \ldots, s) \\ s\mu & (n = s+1, s+2, \ldots) \end{cases}$$

Steady-state conditions prevail whenever

$$\rho \equiv \frac{\lambda}{s\mu} < 1$$

The steady-state probabilities are given by (*24.1*) as

$$p_0 = \left[\frac{s^s \rho^{s+1}}{s!(1-\rho)} + \sum_{n=0}^{s} \frac{(s\rho)^n}{n!} \right]^{-1} \tag{24.5}$$

and

$$p_n = \begin{cases} \dfrac{(s\rho)^n}{n!} p_0 & (n = 1, \ldots, s) \\ \dfrac{s^s \rho^n}{s!} p_0 & (n = s+1, s+2, \ldots) \end{cases} \tag{24.6}$$

(See Problem 24.5.) With p_0 given by (*24.5*),

$$L_q = \frac{s^s \rho^{s+1} p_0}{s!(1-\rho)^2} \tag{24.7}$$

Once L_q is determined, W_q, W, and L are obtained from (*23.6*), (*23.4*), and (*23.5*), respectively, with $\bar{\lambda} = \lambda$. Equation (*23.4*) applies here, because, regardless of the state of the system, the expected service time for each customer has the fixed value $1/\mu$. Furthermore,

$$W(t) = e^{-\mu t}\left\{1 + \frac{(s\rho)^s p_0[1 - e^{-\mu t(s-1-s\rho)}]}{s!(1-\rho)(s-1-s\rho)}\right\} \qquad (t \geq 0) \tag{24.8}$$

$$W_q(t) = \frac{(s\rho)^s p_0}{s!(1-\rho)} e^{-s\mu t(1-\rho)} \qquad (t \geq 0) \tag{24.9}$$

(See Problems 24.5 and 24.6.)

M/M/1/K SYSTEMS

An M/M/1/K system can accommodate a maximum of K customers in the service facility at the same time. Customers arriving at the facility when it is full are denied entrance and are not permitted to wait outside the facility for entrance at a later time. If λ designates the mean arrival rate of customers *to* the service facility, then the mean arrival rate *into* the facility when the facility is in state n is

$$\lambda_n = \begin{cases} \lambda & (n = 0, 1, \ldots, K-1) \\ 0 & (n = K, K+1, \ldots) \end{cases}$$

A steady state is always attained, whatever the value of $\rho = \lambda/\mu$, with probabilities given by (*24.1*) as $p_n = 0$ $(n > K)$ and, for $n = 0, 1, \ldots, K$,

$$p_n = \begin{cases} \dfrac{\rho^n(1-\rho)}{1-\rho^{K+1}} & (\rho \neq 1) \\ \dfrac{1}{K+1} & (\rho = 1) \end{cases} \tag{24.10}$$

The measures of effectiveness are

$$L = \begin{cases} \dfrac{\rho}{1-\rho} - \dfrac{(K+1)\rho^{K+1}}{1-\rho^{K+1}} & (\rho \neq 1) \\ \dfrac{K}{2} & (\rho = 1) \end{cases} \tag{24.11}$$

with W, W_q, and L_q obtained from (*23.5*), (*23.4*), and (*23.6*), respectively, wherein

$$\bar{\lambda} = \lambda(1 - p_K) \tag{24.12}$$

(See Problem 24.7.)

M/M/s/K SYSTEMS

An M/M/s/K system is a finite-capacity system with s servers having independent, identically distributed, exponential service times (which do not depend on the state of the system). Since the capacity of the system must be at least as large as the number of servers, $s \leq K$. For such a system,

$$\lambda_n = \begin{cases} \lambda & (n = 0, 1, \ldots, K-1) \\ 0 & (n = K, K+1, \ldots) \end{cases} \qquad \mu_n = \begin{cases} n\mu & (n = 0, 1, \ldots, s) \\ s\mu & (n = s+1, s+2, \ldots) \end{cases}$$

Steady-state probabilities exist for all values of $\rho \equiv \lambda/s\mu$, and are given by (*24.1*) as

$$p_0 = \begin{cases} \left[\dfrac{s^s\rho^{s+1}(1-\rho^{K-s})}{s!(1-\rho)} + \displaystyle\sum_{n=0}^{s} \dfrac{(s\rho)^n}{n!}\right]^{-1} & (\rho \neq 1) \\ \left[\dfrac{s^s}{s!}(K-s) + \displaystyle\sum_{n=0}^{s} \dfrac{s^n}{n!}\right]^{-1} & (\rho = 1) \end{cases} \tag{24.13}$$

and

$$p_n = \begin{cases} \dfrac{(s\rho)^n}{n!} p_0 & (n = 1, 2, \ldots, s) \\ \dfrac{s^s\rho^n}{s!} p_0 & (n = s+1, \ldots, K) \\ 0 & (n = K+1, K+2, \ldots) \end{cases} \tag{24.14}$$

The measures of effectiveness are

$$L_q = \frac{s^s\rho^{s+1}}{s!(1-\rho)^2}[1 - \rho^{K-s} - (1-\rho)(K-s)\rho^{K-s}]p_0 \tag{24.15}$$

with W_q, W, and L obtained from (*23.6*), (*23.4*), and (*23.5*), respectively; $\bar{\lambda}$ is again given by (*24.12*). (See Problem 24.8.) An M/M/1/K system is a special M/M/s/K system with $s = 1$ (see Problem 24.28).

Solved Problems

24.1 A grocery store has a single checkout counter attended by a cashier who also functions as the bagger when the store is not too busy. Customer arrive at the checkout counter according to a Poisson process, at a mean rate of 30 per hour. The time required for the cashier to total a customer's purchases, bag the groceries, and make change is exponentially distributed, with a mean of 2 min. Whenever there are three or more customers at the counter (including the customer in service), a second employee of the store is instructed to assist the cashier as a bagger. When the two employees work together, the service time for a customer remains exponentially distributed, but with a mean of 1 min. Determine (*a*) the average number of customers at the checkout counter at the same time, (*b*) the length of time a customer should expect to spend at the checkout counter, and (*c*) the length of time a customer should expect to wait on line before having his or her purchases totaled.

Throughout the process the arrival rate remains state-independent at $\lambda_n = \lambda = 30\ \text{h}^{-1}$. The service times, however, are state-dependent. When there are fewer than three customers at the counter, the mean service time is 2 min; hence the mean service rate is $30\ \text{h}^{-1}$. When there are three or more customers at the counter, the mean service time is 1 min; hence the mean service rate increases to $60\ \text{h}^{-1}$. Thus

$$\mu_n = \begin{cases} 30\ \text{h}^{-1} & (n = 1, 2) \\ 60\ \text{h}^{-1} & (n = 3, 4, \ldots) \end{cases}$$

Note that, when a new arrival changes the state of the system from 2 to 3, the customer in service is instantly subject to the new exponential distribution (the "memoryless" property).

It follows from (*24.1*) that

$$p_1 = \frac{\lambda_0}{\mu_1}p_0 = \frac{30}{30}p_0 = p_0 \qquad p_2 = \frac{\lambda_1}{\mu_2}p_1 = \frac{30}{30}(p_0) = p_0$$

$$p_3 = \frac{\lambda_2}{\mu_3}p_2 = \frac{30}{60}(p_0) = \tfrac{1}{2}p_0 \qquad p_4 = \frac{\lambda_3}{\mu_4}p_3 = \frac{30}{60}(\tfrac{1}{2}p_0) = (\tfrac{1}{2})^2 p_0$$

and, in general,

$$p_n = (\tfrac{1}{2})^{n-2} p_0 \qquad (n \geq 2)$$

To find p_0, we solve

$$1 = \sum_{n=0}^{\infty} p_n = p_0 + p_1 + \sum_{n=2}^{\infty} p_n = 2p_0 + \sum_{n=2}^{\infty} (\tfrac{1}{2})^{n-2} p_0$$
$$= 2p_0 + 2p_0 = 4p_0$$

obtaining $p_0 = 1/4$. Therefore,

$$p_n = \begin{cases} \frac{1}{4} & (n = 0, 1) \\ (\frac{1}{2})^n & (n = 2, 3, \ldots) \end{cases}$$

The generating function for these probabilities is

$$F(z) \equiv \sum_{n=0}^{\infty} p_n z^n = \frac{1}{4} + \frac{1}{4} z + \sum_{n=2}^{\infty} \left(\frac{z}{2}\right)^n = \frac{2 + z + z^2}{8 - 4z}$$

(*a*)
$$L = \sum_{n=0}^{\infty} n p_n = \left.\frac{dF}{dz}\right|_{z=1} = \frac{28}{16} = 1.75 \text{ customers}$$

(*b*) Since $\bar{\lambda} = \lambda = 30\ \text{h}^{-1}$,

$$W = \frac{L}{\bar{\lambda}} = \frac{1.75}{30} = 0.05833 \text{ h} = 3.5 \text{ min}$$

(*c*) Because the bagger and the cashier work together, the number of servers is state-independent at $s_n = 1$. Then, as in Problem 23.11,

$$L_q = \sum_{n=2}^{\infty} (n-1) p_n = L - (1 - p_0) = 1.75 - 0.75 = 1.00 \text{ customer}$$

and

$$W_q = \frac{L_q}{\bar{\lambda}} = \frac{1.00}{30} = 0.0333 \text{ h} = 2 \text{ min}$$

Observe that the average service time *per customer* is

$$W - W_q = 1.5 \text{ min}$$

24.2 Rework Problem 24.1 if the second employee comes in as a separate, equally efficient cashier-bagger, working in parallel with the first. Whenever only two customers remain, the momentarily free employee leaves the checkout counter, to return whenever the state again reaches 3. Would this arrangement be preferable from the customers' point of view?

The λ_n and μ_n are the same as in Problem 24.1; hence, the state probabilities, and along with them L and W, remain unchanged. However, the number of servers is now state-dependent, with

$$s_n = \begin{cases} 1 & (n = 0, 1, 2) \\ 2 & (n = 3, 4, \ldots) \end{cases}$$

and so

$$L_q = 1p_2 + \sum_{n=3}^{\infty} (n-2) p_n = p_2 + \sum_{n=1}^{\infty} (n-2) p_n + p_1$$
$$= p_2 + L - 2(1 - p_0) + p_1 = \tfrac{1}{4} + 1.75 - 2(\tfrac{3}{4}) + \tfrac{1}{4} = 0.75 \text{ customer}$$
$$W_q = \frac{0.75}{30} = 0.025 \text{ h} = 1.5 \text{ min}$$

As compared with the situation in Problem 24.1, customers wait an average of 0.5 min less *for* service and spend an average of 0.5 min more *in* service. Probably they would favor such a tradeoff.

24.3 Derive (*24.1*).

Setting $dp_n/dt = 0$ (steady-state conditions) in the Kolmogorov equations for a generalized Markovian birth-death process, (*21.1*), we obtain, after rearrangement,

$$p_{n+1} = \frac{\lambda_n + \mu_n}{\mu_{n+1}} p_n - \frac{\lambda_{n-1}}{\mu_{n+1}} p_{n-1} \qquad (n = 1, 2, \ldots) \tag{1}$$

$$p_1 = \frac{\lambda_0}{\mu_1} p_0 \tag{2}$$

Equation (*2*) gives p_1 in terms of p_0. Solving (*1*) iteratively, we also find

$$p_2 = \frac{\lambda_1 + \mu_1}{\mu_2} p_1 - \frac{\lambda_0}{\mu_2} p_0 = \frac{\lambda_1 + \mu_1}{\mu_2}\left(\frac{\lambda_0}{\mu_1} p_0\right) - \frac{\lambda_0}{\mu_2} p_0 = \frac{\lambda_1\lambda_0}{\mu_2\mu_1} p_0$$

$$p_3 = \frac{\lambda_2 + \mu_2}{\mu_3} p_2 - \frac{\lambda_1}{\mu_3} p_1$$

$$= \frac{\lambda_2 + \mu_2}{\mu_3}\left(\frac{\lambda_1\lambda_0}{\mu_2\mu_1} p_0\right) - \frac{\lambda_1}{\mu_3}\left(\frac{\lambda_0}{\mu_1} p_0\right) = \frac{\lambda_2\lambda_1\lambda_0}{\mu_3\mu_2\mu_1} p_0$$

and, in general,

$$p_n = \frac{\lambda_{n-1}\lambda_{n-2}\cdots\lambda_0}{\mu_n\mu_{n-1}\cdots\mu_1} p_0 \qquad \text{or} \qquad p_n = \frac{\lambda_{n-1}}{\mu_n} p_{n-1}$$

24.4 The owner of a small but busy newspaper and tobacco store serves customers on an average of one every 30 s, the actual distribution being exponential. Customers arrive according to a Poisson process, at a mean rate of three per minute, and they can wait for service if the owner is busy with another customer. A number of customers choose not to wait and take their business elsewhere. The probability that an arriving customer balks is $n/3$, where n is the number of customers already in the store. How much profit must the shop owner expect to lose from customers who take their business elsewhere, if the average profit per customer is 30¢?

Since the probability of balking is 1 when there are three customers in the store, the store never experiences more than three customers at the same time, and the only feasible states are 0, 1, 2, and 3. We take the balking function to be

$$b(n) = \begin{cases} n/3 & (n = 0, 1, 2, 3) \\ 1 & (n = 4, 5, \ldots) \end{cases}$$

The mean arrival rate of customers *to* the store is $\lambda = 3$, whence, by (*24.3*), the mean rates *into* the store are

$$\lambda_0 = (1 - \tfrac{0}{3})(3) = 3 \qquad \lambda_1 = (1 - \tfrac{1}{3})(3) = 2 \qquad \lambda_2 = (1 - \tfrac{2}{3})(3) = 1$$

and $\lambda_n = (1 - 1)(3) = 0$ when $n = 3, 4, \ldots$. The service rate is state-independent, with $\mu_n = \mu = 2$ customers per minute. From (*24.1*),

$$p_1 = \frac{\lambda_0}{\mu_1} p_0 = \tfrac{3}{2} p_0$$

$$p_2 = \frac{\lambda_1}{\mu_2} p_1 = \tfrac{2}{2}(\tfrac{3}{2} p_0) = \tfrac{3}{2} p_0$$

$$p_3 = \frac{\lambda_2}{\mu_3} p_2 = \tfrac{1}{2}(\tfrac{3}{2} p_0) = \tfrac{3}{4} p_0$$

and $p_n = 0$ $(n = 4, 5, \ldots)$. The requirement that the probabilities sum to 1 gives $p_0 = 4/19$. Hence,

$$p_1 = \frac{6}{19} \qquad p_2 = \frac{6}{19} \qquad p_3 = \frac{3}{19} \qquad p_n = 0 \quad (n > 3)$$

The expected rate at which customers balk is

$$\sum_{n=0}^{\infty} (\lambda - \lambda_n)p_n = (3-3)\frac{4}{19} + (3-2)\frac{6}{19} + (3-1)\frac{6}{19} + (3-0)\frac{3}{19} + 0 + 0 + \cdots$$

$$= 1.4211 \text{ customers per minute}$$

so that the expected loss rate is

$$(30¢)(1.4211) = 42.633¢/\text{min} = \$25.58 \text{ per hour}$$

24.5 A small bank has two tellers, who are equally efficient and who are each capable of handling an average of 60 customer transactions per hour, with the actual service times exponentially distributed. Customers arrive at the bank according to a Poisson process, at a mean rate of 100 per hour. Determine (*a*) the probability that there are more than three customers in the bank at the same time, (*b*) the probability that a given teller is idle, and (*c*) the probability that a customer spends more than 3 min in the bank.

This is an M/M/2 system, with $\lambda = 100$ and $\mu = 60$. Since

$$\rho = \frac{100}{2(60)} = \frac{5}{6} < 1$$

steady-state conditions will prevail eventually. Using (*24.5*), we calculate

$$\frac{1}{p_0} = \frac{2^2(5/6)^3}{2![1-(5/6)]} + \sum_{n=0}^{2} \frac{(5/3)^n}{n!} = \frac{125}{18} + \frac{1}{0!}\left(\frac{5}{3}\right)^0 + \frac{1}{1!}\left(\frac{5}{3}\right)^1 + \frac{1}{2!}\left(\frac{5}{3}\right)^2 = 11$$

or $p_0 = 1/11 = 0.0909$. The remaining steady-state probabilities are then determined from (*24.6*) as

$$p_1 = \frac{(5/3)^1}{1!}\left(\frac{1}{11}\right) = 0.1515$$

$$p_2 = \frac{(5/3)^2}{2!}\left(\frac{1}{11}\right) = 0.1263$$

$$p_3 = \frac{2^2(5/6)^3}{2!}\left(\frac{1}{11}\right) = 0.1052$$

$$p_4 = \rho p_3 = \frac{5}{6}(0.1052) = 0.0877$$

and so on.

(*a*) $$1 - (p_0 + p_1 + p_2 + p_3) = 1 - (0.0909 + 0.1515 + 0.1263 + 0.1052) = 0.5261$$

(*b*) A given teller is idle if there are no customers in the bank or if there is one customer in the bank and that customer is being served by the other teller.

$$p_0 + \tfrac{1}{2}p_1 = 0.0909 + \tfrac{1}{2}(0.1515) = 0.1667$$

(*c*) Using (*24.8*), we find the probability that a customer will spend more than 3 min, or 1/20 h, in the bank to be

$$W\left(\frac{1}{20}\right) = e^{-60(1/20)}\left\{1 + \frac{(5/3)^2(1/11)[1 - e^{-60(1/20)[2-1-(5/3)]}]}{2![1-(5/6)][2-1-(5/3)]}\right\} = 0.4113$$

24.6 A state department of transportation has three safety investigation teams who are on call continuously and whose job it is to analyze road conditions in the vicinity of each fatal accident

on a state road. The teams are equally efficient: each takes on the average 2 days to investigate and report on an accident, with the actual time apparently exponentially distributed. The number of fatal accidents on state roads appears to follow a Poisson process, at a mean rate of 300 per year. Determine L, L_q, W, and W_q for this process and give meaning to each of these quantities.

This is an M/M/3 process, with $\lambda = 300$ accidents per year, $\mu = 365/2 = 182.5$ reports per team per year, and

$$\rho = \frac{300}{3(182.5)} = \frac{40}{73}$$

To evaluate L_q by (*24.7*), we must first determine p_0. From (*24.5*),

$$\frac{1}{p_0} = \frac{3^3(40/73)^4}{3![1-(40/73)]} + \sum_{n=0}^{3} \frac{1}{n!}\left(\frac{300}{182.5}\right)^n$$

$$= 0.89737 + \frac{1}{0!}\left(\frac{300}{182.5}\right)^0 + \frac{1}{1!}\left(\frac{300}{182.5}\right)^1 + \frac{1}{2!}\left(\frac{300}{182.5}\right)^2 + \frac{1}{3!}\left(\frac{300}{182.5}\right)^3 = 5.63263$$

Hence $p_0 = 1/5.63263 = 0.177537$. Then,

$$L_q = \frac{3^3(40/73)^4(0.177537)}{3![1-(40/73)]^2} = 0.3524$$

On the average, the department has a backlog of 0.3524 accidents.

Using (*23.6*), with $\bar{\lambda} = \lambda = 300$, we have

$$W_q = \frac{1}{300}(0.3524) = 0.001175 \text{ year} = 0.429 \text{ day}$$

There elapses, on the average, slightly less than $\frac{1}{2}$ day between a fatal accident and the start of its investigation.

It follows from (*23.4*) that

$$W = 0.001175 + \frac{1}{182.5} = 0.006654 \text{ year} = 2.429 \text{ days}$$

On the average, it takes slightly less than $2\frac{1}{2}$ days for the department to complete its work once a fatal accident has occurred.

Finally, we determine from (*23.5*) that

$$L = 300(0.006654) = 1.996 \text{ accidents}$$

On the average, the department has nearly two cases under its jurisdiction, awaiting final action.

24.7 A service station on a rural road has a single pump from which to dispense gasoline. Cars arrive at the station for gasoline according to a Poisson process, at a mean rate of 10 per hour. The time required to service a car appears to be exponentially distributed, with a mean of 2 min. The station can accommodate a maximum of four cars, and local traffic laws prohibit cars from waiting on the road. Determine (*a*) the average number of cars simultaneously at the station; (*b*) the average time a customer must wait for service once access to the station is achieved; (*c*) the average rate at which revenue is lost from customers' taking their business elsewhere when the station is full, if the average sale is \$15.00.

This is an M/M/1/4 system, with

$$\mu_n = \mu = \tfrac{1}{2}\text{ min}^{-1} = 30\text{ h}^{-1}$$

The mean arrival rate *to* the station is $\lambda = 10\text{ h}^{-1}$; so the mean arrival rates *into* the station are

$$\lambda_n = \begin{cases} 10\text{ h}^{-1} & (n = 0, 1, 2, 3) \\ 0\text{ h}^{-1} & (n = 4, 5, \ldots) \end{cases}$$

The traffic intensity *offered* to the system is $\rho = \lambda/\mu = 1/3$.

(*a*) From (*24.11*),

$$L = \frac{1}{2} - \frac{5(1/3)^5}{1-(1/3)^5} = 0.4793 \text{ car}$$

(*b*) To obtain W_q, we use (*23.4*), after first determining p_4, $\bar{\lambda}$, and W from (*24.10*), (*24.12*), and (*23.5*), respectively. Here,

$$p_4 = \frac{(1/3)^4(2/3)}{1-(1/3)^5} = 0.008264$$

Hence $\bar{\lambda} = 10(1 - 0.008264) = 9.917 \text{ h}^{-1}$, which represents the mean rate at which cars actually enter the station. Then

$$W = \frac{0.4793}{9.917} = 0.04833 \text{ h}$$

$$W_q = 0.04833 - \frac{1}{30} = 0.015 \text{ h} = 54 \text{ s}$$

(*c*) Cars are denied entrance to the station at the mean rate

$$\lambda - \bar{\lambda} = 10 - 9.917 = 0.083 \text{ h}^{-1}$$

so that the mean rate of revenue loss is (15)(0.083) = \$1.25 per hour.

24.8 A self-service car wash has four stalls in which customers can clean and wax their automobiles and room to accommodate a maximum of three additional cars when all stalls are full. Customers arrive at the car wash according to a Poisson process, at a mean rate of 15 per hour. If there is no room for them on the grounds of the car wash, arriving customers must go elsewhere. The time required to service a car appears to be exponentially distributed, with a mean of 12 min. Determine (*a*) the average number of cars at the car wash at any given time, and (*b*) the expected rate at which cars are denied entrance to the car wash.

This is an M/M/4/7 system, with

$$\mu = 5 \text{ h}^{-1} \qquad \lambda = 15 \text{ h}^{-1} \qquad \rho \equiv \frac{15}{4(5)} = \frac{3}{4}$$

(*a*) To determine L we use (*23.5*), after first calculating p_0, L_q, p_7, $\bar{\lambda}$, W_q, and W sequentially. From (*24.13*),

$$p_0 = \left[\frac{(4^4)(3/4)^5[1-(3/4)^3]}{4!(1/4)} + \sum_{n=0}^{4} \frac{3^n}{n!}\right]^{-1}$$

$$= \left[\frac{2997}{512} + \frac{3^0}{0!} + \frac{3^1}{1!} + \frac{3^2}{2!} + \frac{3^3}{3!} + \frac{3^4}{4!}\right]^{-1} = (22.2285)^{-1} = 0.04499$$

By (*24.15*),

$$L_q = \frac{(4^4)(3/4)^5}{4!(1/4)^2}[1-(3/4)^3-(1/4)(3)(3/4)^3](0.04499) = 0.4768 \text{ car}$$

Using (*24.14*), we find that

$$p_7 = \frac{(4)^4(3/4)^7}{4!}(0.04499) = 0.06406$$

and, from (*24.12*),

$$\bar{\lambda} = 15(1 - 0.06406) = 14.04 \text{ h}^{-1}$$

Finally,

$$W_q = \frac{L_q}{\bar{\lambda}} = \frac{0.4768}{14.04} = 0.03396 \text{ h}$$

$$W = W_q + \frac{1}{\mu} = 0.03396 + 0.2 = 0.23396 \text{ h}$$

$$L = \bar{\lambda} W = (14.04)(0.23396) = 3.285 \text{ cars}$$

(*b*) $$\lambda - \bar{\lambda} = 15 - 14.04 = 0.96 \text{ cars per hour}$$

24.9 Customers arrive at a barber shop at an average rate of five per hour, the actual arrivals being Poisson-distributed. There is one barber on duty at all times and there are four chairs for customers who arrive when the barber is busy. Local fire ordinances limit the total number of customers in the shop at the same time to a maximum of five. Customers who arrive when the shop is full are denied entrance and their business is presumed lost. The barber's service time is exponentially distributed, but the mean changes with the number of customers in the shop. As the shop fills, the barber tries to speed service, but actually becomes less efficient, as shown in the following table:

Number in Shop	1	2	3	4	5
Mean Service Time, min	9	10	12	15	20

Determine (*a*) the average number of people in the shop at the same time, (*b*) the expected time a customer must wait for service, and (*c*) the percentage of time the barber is idle.

This is a finite-capacity system, but it is *not* an M/M/1/5 system, because the service times are state-dependent. Nonetheless, the measures of effectiveness can be calculated directly, once the steady-state probabilities are known. For this system, the mean arrival rate *to* the shop is $\lambda = 5 \text{ h}^{-1} = (1/12) \text{ min}^{-1}$; so the mean arrival rates *into* the shop are, in min^{-1},

$$\lambda_n = \begin{cases} 1/12 & (n = 0, 1, 2, 3, 4) \\ 0 & (n = 5, 6, \ldots) \end{cases}$$

The mean service rates are, in min^{-1}: $\mu_1 = 1/9$, $\mu_2 = 1/10$, $\mu_3 = 1/12$, $\mu_4 = 1/15$, $\mu_5 = 1/20$. The steady-state probabilities are given by (*24.1*) as

$$p_1 = \frac{\lambda_0}{\mu_1} p_0 = \frac{3}{4} p_0 \qquad p_4 = \frac{\lambda_3}{\mu_4} p_3 = \frac{25}{32} p_0$$

$$p_2 = \frac{\lambda_1}{\mu_2} p_1 = \frac{5}{8} p_0 \qquad p_5 = \frac{\lambda_4}{\mu_5} p_4 = \frac{125}{96} p_0$$

$$p_3 = \frac{\lambda_2}{\mu_3} p_2 = \frac{5}{8} p_0 \qquad p_n = 0 \qquad (n > 5)$$

and, normalizing, we find

$$1 = \sum_{n=0}^{\infty} p_n = 5.0833 p_0 \qquad \text{or} \qquad p_0 = 0.1967$$

Hence, $p_1 = 0.1475$, $p_2 = 0.1230$, $p_3 = 0.1230$, $p_4 = 0.1537$, and $p_5 = 0.2561$.

(*a*) $$L = \sum_{n=1}^{5} n p_n = 1(0.1475) + 2(0.1230) + 3(0.1230) + 4(0.1537) + 5(0.2561) = 2.658 \text{ customers}$$

(*b*) We use (*23.6*) to determine W_q, after first calculating $\bar{\lambda}$ and L_q. By (*24.2*),

$$\bar{\lambda} = \sum_{n=0}^{4} \lambda_n p_n = \frac{1}{12}(1 - p_5) = 0.06199 \text{ min}^{-1}$$

and ($s_n = 1$)

$$L_q = \sum_{n=2}^{5} (n-1)p_n = (1)(0.1230) + (2)(0.1230) + (3)(0.1537) + (4)(0.2561)$$
$$= 1.8545 \text{ customers}$$

Therefore,

$$W_q = \frac{1.8545}{0.06119} = 30.31 \text{ min}$$

(*c*) The barber is idle when there are no customers in the shop. This occurs with probability $p_0 = 0.1967$, or just under 20 percent of the time.

24.10 The service station described in Problem 24.7 is popular because it sells gas at a slightly lower price than its competitors. The price, however, is not sufficiently low to compensate for a long wait in line; so customers tend to renege according to the reneging function

$$r(n) = \begin{cases} 0 \quad \text{h}^{-1} & (n = 0, 1) \\ e^{n/2}\,\text{h}^{-1} & (n = 2, 3, 4) \end{cases}$$

Determine (*a*) the average number of cars in the station at any time, and (*b*) the expected number of cars that renege each hour.

This system is an M/M/1/4 system with reneging. Alternatively, it can be viewed as an M/M/1 system with reneging, and with forced balking whenever the state of the system reaches 4. In this latter approach, the balking function is

$$b(n) = \begin{cases} 0 & (n = 0, 1, 2, 3) \\ 1 & (n = 4, 5, \ldots) \end{cases}$$

Either way, the mean arrival rate *to* the station is $\lambda = 10\,\text{h}^{-1}$ and the mean rate of attending to customers is $\mu = 30\,\text{h}^{-1}$, as in Problem 24.7. It follows that the mean arrival rates of customers *into* the station are

$$\lambda_n = \begin{cases} 10\,\text{h}^{-1} & (n = 0, 1, 2, 3) \\ 0\,\text{h}^{-1} & (n = 4, 5, \ldots) \end{cases}$$

The mean rates for processing customers through the system, either by serving them or having them renege, are

$$\mu_1 = \mu + r(1) = 30 + 0 = 30$$
$$\mu_2 = \mu + r(2) = 30 + 2.718 = 32.718$$
$$\mu_3 = \mu + r(3) = 30 + 4.482 = 34.482$$
$$\mu_4 = \mu + r(4) = 30 + 7.389 = 37.389$$

We use (*24.1*) to determine the steady-state probabilities, and, from them, calculate the required measures of efficiency directly. Note that (*24.10*) through (*24.12*), which presume exponential service times for *all* customers, do not apply to the present process.

$$p_1 = \frac{\lambda_0}{\mu_1} p_0 = \frac{10}{30} p_0 = (0.3333)p_0$$

$$p_2 = \frac{\lambda_1}{\mu_2} p_1 = \frac{10}{32.718}(0.3333)p_0 = (0.1019)p_0$$

$$p_3 = \frac{\lambda_2}{\mu_3} p_2 = \frac{10}{34.482}(0.1019)p_0 = (0.02955)p_0$$

$$p_4 = \frac{\lambda_3}{\mu_4} p_3 = \frac{10}{37.389}(0.02955)p_0 = (0.007903)p_0$$

and $p_n = 0$ for $n = 5, 6, \ldots$. Normalizing,

$$1 = \sum_{n=0}^{\infty} p_n = (1.473)p_0 \qquad \text{or} \qquad p_0 = 0.6789$$

Consequently, $p_1 = 0.2263$, $p_2 = 0.0692$, $p_3 = 0.0201$, and $p_4 = 0.0054$.

(*a*) $$L = \sum_{n=1}^{4} np_n = 1(0.2263) + 2(0.0692) + 3(0.0201) + 4(0.0054) = 0.4466 \text{ car}$$

(*b*) The expected reneging rate, in cars per hour, as a function of the state of the system is $r(n)$. Therefore, the expected number of cars, N, that renege each hour is

$$N = \sum_{n=0}^{4} r(n)p_n = (0)(0.6789) + (0)(0.2263) + (2.718)(0.0692) + (4.482)(0.0201) + (7.389)(0.0054)$$

$$= 0.3181 \text{ car per hour}$$

Supplementary Problems

24.11 A bakery is staffed by two clerks, each of them capable of handling an average of 30 customers an hour, with the actual service times exponentially distributed. Customers arrive at the bakery according to a Poisson process, at a mean rate of 40 per hour. Determine (*a*) the fraction of time a given clerk is idle, and (*b*) the probability that there are more than two customers awaiting service at any given time.

24.12 A suburban train station has five public telephones. During afternoon rush hours, individuals wanting to place calls arrive at the telephone booths according to a Poisson process, at the rate of 100 per hour. The average duration of a call is 2 min, the actual duration being exponentially distributed. Determine (*a*) the expected amount of time an individual must wait for a telephone once having arrived at the booths, (*b*) the probability that this wait will exceed 1 min, and (*c*) the number of people expected to be using or waiting for a telephone.

24.13 A small bank has two tellers, one for deposits and one for withdrawals. The service time for each teller is exponentially distributed, with a mean of 1 min. Customers arriving at the bank according to a Poisson process, with mean rate 40 per hour; it is assumed (see Problem 21.26) that depositors and withdrawers constitute separate Poisson processes, each with mean rate 20 per hour, and that no customer is both a depositor and a withdrawer. The bank is thinking of changing the current arrangement to allow each teller to handle both deposits and withdrawals. The bank would expect that each teller's mean service time would increase to 1.2 min, but it hopes that the new arrangement would prevent long lines in front of one teller while the other teller is idle, a situation that occurs from time to time under the current setup. Analyze the two arrangements with respect to the average idle time of a teller and the expected number of customers in the bank at any given time.

24.14 A tree surgeon hires an answering service to handle incoming telephone calls. The answering service is attended by one operator and has the ability to keep two callers on hold if the operator is busy with another caller. If all three lines are busy (one for the operator and two for keeping customers on hold), a caller receives a busy signal. Calls are made to the tree surgeon according to a Poisson process, at the mean rate 20 per hour. Once a connection is made with the operator, the duration of a call is exponentially distributed, with mean length 1 min. Determine (*a*) the probability that a caller will receive a busy signal, (*b*) the probability that a caller will be placed on hold, and (*c*) the probability that a caller will speak with the operator immediately upon placing a call.

24.15 A takeout Chinese restaurant has space to accommodate at most five customers. During the winter months, it is noticed that when customers arrive and the restaurant is full, virtually no one waits outside in the subfreezing weather but goes to another establishment. Customers arrive at the restaurant according to a

Poisson process, at a mean rate of 15 per hour. The restaurant serves customers at the average rate of 15 per hour, with the actual service times exponentially distributed. The restaurant is staffed only by the owner, who attends to customers on a first-come, first-served basis. Determine (*a*) the average number of customers in the restaurant at any given time, (*b*) the expected time a customer must wait for service, and (*c*) the expected rate at which revenue is lost by the restaurant due to limited facilities if the average bill is \$10.00.

24.16 A bus company directs its buses to its service facility for routine maintenance every 25 000 m. The service facility is open 24 h each day and is staffed by a single crew capable of working on one bus at a time. The time it takes to service a bus is exponentially distributed, with a mean of 4 h. Buses arrive at the facility according to a Poisson process, at a mean rate of 12 per day. Drivers, however, are instructed not to enter the facility if there are four or more buses already there, but to return to the dispatcher for reassignment. Determine (*a*) the expected amount of time a bus spends at the service facility, when it remains there; (*b*) the expected monetary loss each day to the bus company from its limited service facilities, if the cost of sending a bus to the facility and having it return unserviced is \$80.

24.17 The bus company described in Problem 24.16 is thinking of expanding the service staff to two equally efficient crews. The daily cost of the added crew would be \$300. Is such an expansion advisable?

24.18 A hospital maternity section has five labor rooms. Maternity patients arrive at the hospital according to a Poisson process, at a mean rate of 12 per day, and are assigned a labor room if one is available; otherwise they are directed to another hospital. A patient occupies a labor room for 6 h, on the average; the actual time appears to be exponentially distributed about this mean. Determine (*a*) the average occupancy rate of the labor rooms (i.e., the percentage of labor rooms in use over the long run), and (*b*) the average rate at which maternity patients are directed to other hospitals.

24.19 A store has two clerks, each capable of serving customers at an average rate of 60 per hour; actual service times are exponentially distributed. The capacity of the store is five customers, with no waiting outside allowed. Customers come to the store in a Poisson-type process where the average arrival rate depends on the number of people in the store, as follows:

Number in Store	0	1	2	3	4	5
Average Arrival Rate, h^{-1}	100	110	120	140	170	200

Determine (*a*) the expected number of customers in the store together, (*b*) the expected amount of time a customer must wait for service, and (*c*) the expected rate at which customers are lost due to limited facilities.

24.20 A car wash has room for only three waiting cars and has two lanes for washing cars. Each lane can accommodate one car at a time. Cars arrive according to a Poisson process, at a mean rate of 20 per hour, but are denied entrance whenever the wash is full. Washing and cleaning is done manually, and appears to follows an exponential distribution. Under normal conditions, each lane services a car in an average of 5 min. However, when two or more cars are waiting for service, the washing procedure is streamlined, reducing the average service time to 4 min. Determine (*a*) the expected number of cars at the car wash, and (*b*) the expected length of time a car spends at the wash if it is not denied entrance.

24.21 Customers arrive at a small delicatessen according to a Poisson process, at a mean rate of 30 per hour. The establishment can hold at most four customers; whenever it is full, arriving customers are denied entrance and their business is lost. The owner of the delicatessen is the only server, and his service time is exponentially distributed so long as there is but one customer in the store, the average service time then being 5 min. The owner, however, becomes more efficient as the store fills, decreasing his conversations with customers and thereby decreasing the mean service time by 1 min for each customer in line waiting for service. Determine (*a*) the expected number of people together in the delicatessen (not including the owner), and (*b*) the average service time for the owner.

24.22 Determine the steady-state probabilities for an M/M/1 system with balking, if there is a 20 percent chance of a balk whenever there are one or more customers already in the system.

24.23 Solve Problem 24.21 if the probability of a customer's balking is $1 - (\frac{1}{2})^n$ when the state of the system is $n = 0, 1, 2, 3$.

24.24 Solve Problem 24.15 if customers renege according to the reneging function

$$r(n) = \begin{cases} 0\ \mathrm{h}^{-1} & (n = 0, 1) \\ n^2\ \mathrm{h}^{-1} & (n = 2, 3, 4, 5) \end{cases}$$

24.25 Interpet (*24.1*), $\mu_n p_n = \lambda_{n-1} p_{n-1}$, in terms of transition rates.

24.26 Show that $L = L_q + s\rho$ for an M/M/s system.

24.27 Derive (*24.13*) and (*24.14*).

24.28 Show that the steady-state probabilities for an M/M/s/K system reduce to those of an M/M/1/K system when $s = 1$.

24.29 For an M/M/s/K system, deduce that

$$L = L_q + s - \sum_{n=0}^{s-1} (s - n) p_n$$

24.30 For the queueing process described in Problem 24.8, first determine the steady-state probabilities directly from (*24.1*) and then use them to calculate L. Compare your answer with the result of Problem 24.8(*a*).

24.31 An M/M/∞ system is a queueing process having a Poisson arrival pattern, with mean rate λ; a sufficient number of servers to accommodate all customers that enter the system, the servers having independent, identically distributed, exponential service times with parameter μ; and infinite capacity. Such a model often applies to self-service establishments. Show that for an M/M/∞ system the steady-state probabilities constitute a Poisson distribution, with parameter $\rho \equiv \lambda/\mu$. Then determine L, W, W_q, and L_q.

24.32 Students are accepted into a correspondence course in electrical wiring as soon as they register, and then they complete the course at their own pace. The completion times seem to follow an exponential distribution, with a mean of 7 weeks. New enrollments to the course follow a Poisson process, with a mean rate of 50 per week. Determine (*a*) the number of students that are expected to be concurrently enrolled in the course, and (*b*) the probability that it will take a student more than 7 weeks to complete the course. (*Hint*: Use the results of Problem 24.31.)

24.33 A *finite-source queueing system* is one that has a limited number of potential customers. This number must be small enough so that it is unreasonable to approximate the population of potential customers by means of an infinite source, as has been done in all previous queueing processes in this book. Consider a source initially consisting of N_0 potential customers. Their actualization times, i.e., the times at which they arrive at the service facility, are N_0 independent, exponentially distributed random variables, each with parameter λ. At the moment of service completion, a customer is returned to the source as a new potential customer. Therefore, whenever the state of the service facility is n, the state of the source is $N_0 - n$, giving

$$\lambda_n = (N_0 - n)\lambda \qquad (n = 0, 1, \ldots, N_0) \tag{1}$$

Moreover, for $s < N_0$ servers with independent, exponentially distributed service times having parameter μ,

$$\mu_n = \begin{cases} n\mu & (n = 1, 2, \ldots, s) \\ s\mu & (n = 2 + 1, s + 2, \ldots, N_0) \end{cases} \tag{2}$$

Find the steady-state probabilities in terms of $\rho \equiv \lambda/s\mu$, and compare with the infinite-source expressions, (*24.5*) and (*24.6*).

24.34 Infer directly from (*1*) of Problem 24.33 that $\bar{\lambda} = (N_0 - L)\lambda$.

24.35 A company which has seven delicate machines that frequently break down employs two service people with the sole task of repairing them. Each service person can repair a machine in 2 h, on the average, the actual service time being exponentially distributed about this mean. A newly repaired machine runs an average of 12 h before breaking down again; the actual running time is exponentially distributed about this mean. Determine (*a*) the expected number of machines that are operative at any given time, and (*b*) the percentage of time any given machine will be inoperative. (*Hint*: Use the results of Problems 24.33 and 24.34.)

24.36 For a general queueing process, denote by $\bar{S}$ the average number of customers in service (which is the same thing as the average number of *busy* servers) over all periods in which the system is not empty. Infer from Little's formulas that the mean service time for all customers who are served, $1/\bar{\mu}$, can be expressed as

$$\frac{1}{\bar{\mu}} = \frac{(1 - p_0)\bar{S}}{\bar{\lambda}}$$

Answers to Supplementary Problems

CHAPTER 1

1.16

$$\begin{aligned} \text{maximize:}\quad & z = 28x_1 + 31x_2 \\ \text{subject to:}\quad & 3.5x_1 + 4x_2 \le 50 \\ \text{with:}\quad & \text{both variables nonnegative} \end{aligned}$$

Note: Integer constraints on the variables are not required, since partially completed games can be finished in following weeks.

1.17

$$\begin{aligned} \text{minimize:}\quad & z = 2x_1 + 3x_2 + 5x_3 + 6x_4 + 8x_5 + 8x_6 \\ \text{subject to:}\quad & 20x_1 + 30x_2 + 40x_3 + 40x_4 + 45x_5 + 30x_6 \ge 70 \\ & 50x_1 + 30x_2 + 20x_3 + 25x_4 + 50x_5 + 20x_6 \ge 100 \\ & 4x_1 + 9x_2 + 11x_3 + 10x_4 + 9x_5 + 10x_6 \ge 20 \\ \text{with:}\quad & \text{all variables nonnegative} \end{aligned}$$

Note: Since feed F is no better than feed C, which is cheaper, no feed F will be used in the optimal mix. Thus, the program can be simplified by substituting $x_6 = 0$.

1.18

$$\begin{aligned} \text{maximize:}\quad & z = 6x_1 + 4x_2 + 6x_3 + 8x_4 \\ \text{subject to:}\quad & 3x_1 + 2x_2 + 2x_3 + 4x_4 \le 480 \\ & x_1 + x_2 + 2x_3 + 3x_4 \le 400 \\ & 2x_1 + x_2 + 2x_3 + x_4 \le 400 \\ & x_1 \ge 50 \\ & x_2 + x_3 \ge 100 \\ & x_4 \le 25 \\ \text{with:}\quad & \text{all variables nonnegative} \end{aligned}$$

1.19

$$\begin{aligned} \text{minimize:}\quad & z = 1.50x_1 + 0.75x_2 + 2.00x_3 + 1.75x_4 + 0.25x_5 \\ \text{subject to:}\quad & 0.2x_1 - 0.15x_2 + 0.8x_3 - 0.2x_4 - 0.2x_5 \ge 0 \\ & 0.3x_1 - 0.1x_3 + 0.9x_4 - 0.1x_5 \ge 0 \\ & -0.05x_1 + 0.15x_2 - 0.05x_3 - 0.05x_4 - 0.05x_5 \ge 0 \\ & x_1 + x_2 + x_3 + x_4 + x_5 \ge 500 \\ & x_1 \le 200 \\ & x_2 \le 400 \\ & x_3 \le 100 \\ & x_4 \le 50 \\ & x_5 \le 800 \\ \text{with:}\quad & \text{all variables nonnegative} \end{aligned}$$

1.20

$$\begin{aligned}
\text{maximize:}\quad & z = 20x_1 + 17x_2 + 15x_3 + 15x_4 + 10x_5 + 8x_6 + 5x_7 \\
\text{subject to:}\quad & 145x_1 + 92x_2 + 70x_3 + 70x_4 + 84x_5 + 14x_6 + 47x_7 \le 250 \\
& x_i \le 1 \quad (i = 1, 2, \ldots, 7) \\
\text{with:}\quad & \text{all variables nonnegative and integral}
\end{aligned}$$

1.21 The cost of delivering a module from a factory to a manufacturer is the production cost plus the shipping cost.

$$\begin{aligned}
\text{minimize:}\quad & z = (1.10 + 0.11)x_{11} + (1.10 + 0.13)x_{12} + \cdots + (1.03 + 0.15)x_{34} \\
\text{subject to:}\quad & x_{11} + x_{12} + x_{13} + x_{14} \le 7\,500 \\
& x_{21} + x_{22} + x_{23} + x_{24} \le 10\,000 \\
& x_{31} + x_{32} + x_{33} + x_{34} \le 8\,100 \\
& x_{11} + x_{21} + x_{31} = 4\,200 \\
& x_{12} + x_{22} + x_{32} = 8\,300 \\
& x_{13} + x_{23} + x_{33} = 6\,300 \\
& x_{14} + x_{24} + x_{34} = 2\,700 \\
\text{with:}\quad & \text{all variables nonnegative and integral}
\end{aligned}$$

1.22 Since the filler is inexpensive, no more meat will be used in each product than is required. Let x_1, x_2, and x_3, respectively, designate the poundages of hamburger, picnic patties, and meat loaf to be made.

$$\begin{aligned}
\text{minimize:}\quad & (200 - 0.2x_1 - 0.1x_3) + (800 - 0.5x_1 - 0.5x_2 - 0.4x_3) + (150 - 0.2x_2 - 0.3x_3) \\
\text{subject to:}\quad & 0.2x_1 + 0.1x_3 \le 200 \\
& 0.5x_1 + 0.5x_2 + 0.4x_3 \le 800 \\
& 0.2x_2 + 0.3x_3 \le 150 \\
\text{with:}\quad & \text{all variables nonnegative}
\end{aligned}$$

The objective is equivalent to

$$\text{maximize:}\quad z = 0.7x_1 + 0.7x_2 + 0.8x_3$$

1.23

$$\begin{aligned}
\text{minimize:}\quad & z = 145x_{11} + 122x_{12} + 130x_{13} + \cdots + 80x_{54} + 111x_{55} \\
\text{subject to:}\quad & \sum_{i=1}^{5} x_{ij} = 1 \quad (j = 1, 2, 3, 4, 5) \\
& \sum_{j=1}^{5} x_{ij} = 1 \quad (i = 1, 2, 3, 4, 5) \\
\text{with:}\quad & \text{all variables nonnegative and integral}
\end{aligned}$$

1.24

$$\begin{aligned}
\text{minimize:}\quad & z = 210\,000x_1 + 190\,000x_2 + 182\,000x_3 \\
\text{subject to:}\quad & 40x_1 + 65x_2 \ge 1500 \\
& 35x_1 + 53x_3 \ge 1100 \\
& x_1 \le 30 \\
& x_2 \le 30 \\
& x_3 \le 30 \\
\text{with:}\quad & \text{all variables nonnegative and integral}
\end{aligned}$$

1.25

$$\begin{aligned} \text{maximize:} \quad & z = 250x_1 + (600 - x_2)x_2 \\ \text{subject to:} \quad & 0.25x_1 + 0.40x_2 \le 500 \\ & 0.75x_1 + 0.60x_2 \le 1200 \\ \text{with:} \quad & \text{both variables nonnegative} \end{aligned}$$

1.26 The gravitational potential energy of the system is (for a suitably chosen reference level) proportional to $a + b + c$, and this energy is a minimum at equilibrium.

CHAPTER 2

2.22 Set $x_2 = x_4 - x_5$ and $x_3 = x_6 - x_7$, with each new variable nonnegative. Multiply the first constraint by -1.

$$\mathbf{X} \equiv [x_1, x_4, x_5, x_6, x_7, x_8, x_9]^T \qquad \mathbf{C} \equiv [2, -1, 1, 4, -4, 0, 0]^T$$

$$\mathbf{A} \equiv \begin{bmatrix} -5 & -2 & 2 & 3 & -3 & 1 & 0 \\ 2 & -2 & 2 & 1 & -1 & 0 & 1 \end{bmatrix} \qquad \mathbf{B} \equiv \begin{bmatrix} 7 \\ 8 \end{bmatrix} \qquad \mathbf{X}_0 \equiv \begin{bmatrix} x_8 \\ x_9 \end{bmatrix}$$

2.23

$$\mathbf{X} \equiv [x_1, x_2, x_3, x_4, x_5]^T \qquad \mathbf{C} \equiv [10, 11, 0, 0, 0]^T$$

$$\mathbf{A} \equiv \begin{bmatrix} 1 & 2 & 1 & 0 & 0 \\ 3 & 4 & 0 & 1 & 0 \\ 6 & 1 & 0 & 0 & 1 \end{bmatrix} \qquad \mathbf{B} \equiv \begin{bmatrix} 150 \\ 200 \\ 175 \end{bmatrix} \qquad \mathbf{X}_0 \equiv \begin{bmatrix} x_3 \\ x_4 \\ x_5 \end{bmatrix}$$

2.24

$$\mathbf{X} \equiv [x_1, x_2, x_3, x_4, x_5, x_6, x_7, x_8]^T \qquad \mathbf{C} \equiv [10, 11, 0, 0, 0, -M, -M, -M]^T$$

$$\mathbf{A} \equiv \begin{bmatrix} 1 & 2 & -1 & 0 & 0 & 1 & 0 & 0 \\ 3 & 4 & 0 & -1 & 0 & 0 & 1 & 0 \\ 6 & 1 & 0 & 0 & -1 & 0 & 0 & 1 \end{bmatrix} \qquad \mathbf{B} \equiv \begin{bmatrix} 150 \\ 200 \\ 175 \end{bmatrix} \qquad \mathbf{X}_0 \equiv \begin{bmatrix} x_6 \\ x_7 \\ x_8 \end{bmatrix}$$

2.25

$$\mathbf{X} \equiv [x_1, x_2, x_3, x_4, x_5, x_6, x_7, x_8]^T \qquad \mathbf{C} \equiv [3, 2, 4, 6, 0, 0, M, M]^T$$

$$\mathbf{A} \equiv \begin{bmatrix} 1 & 2 & 1 & 1 & -1 & 0 & 1 & 0 \\ 2 & 1 & 3 & 7 & 0 & -1 & 0 & 1 \end{bmatrix} \qquad \mathbf{B} \equiv \begin{bmatrix} 1000 \\ 1500 \end{bmatrix} \qquad \mathbf{X}_0 \equiv \begin{bmatrix} x_7 \\ x_8 \end{bmatrix}$$

2.26

$$\mathbf{X} \equiv [x_1, x_2, x_3, x_4, x_5]^T \qquad \mathbf{C} \equiv [6, 3, 4, M, M]^T$$

$$\mathbf{A} = \begin{bmatrix} 1 & 6 & 1 & 1 & 0 \\ 2 & 3 & 1 & 0 & 1 \end{bmatrix} \qquad \mathbf{B} \equiv \begin{bmatrix} 10 \\ 15 \end{bmatrix} \qquad \mathbf{X}_0 \equiv \begin{bmatrix} x_4 \\ x_5 \end{bmatrix}$$

2.27 Set $x_4 = x_5 - x_6$, with each new variable nonnegative. Then x_3 and x_5 can be used as part of the initial solution once the second constraint is divided by 2.

$$\mathbf{X} \equiv [x_1, x_2, x_3, x_4, x_5, x_6, x_7]^T \qquad \mathbf{C} \equiv [7, 2, 3, 1, -1, -M]^T$$

$$\mathbf{A} \equiv \begin{bmatrix} 2 & 7 & 0 & 0 & 0 & 1 \\ 2.5 & 4 & 0 & 1 & -1 & 0 \\ 1 & 0 & 1 & 0 & 0 & 0 \end{bmatrix} \qquad \mathbf{B} \equiv \begin{bmatrix} 7 \\ 5 \\ 11 \end{bmatrix} \qquad \mathbf{X}_0 \equiv \begin{bmatrix} x_7 \\ x_5 \\ x_3 \end{bmatrix}$$

2.28

$$\mathbf{X} \equiv [x_1, x_2, x_3, x_4, x_5, x_6, x_7, x_8, x_9, x_{10}]^T \qquad \mathbf{C} \equiv [10, 2, -1, 0, 0, 0, 0, M, M, M]^T$$

$$\mathbf{A} \equiv \begin{bmatrix} 1 & 1 & 0 & 1 & 0 & 0 & 0 & 0 & 0 & 0 \\ 1 & 1 & 0 & 0 & -1 & 0 & 0 & 1 & 0 & 0 \\ 0 & 1 & 1 & 0 & 0 & 1 & 0 & 0 & 0 & 0 \\ 0 & 1 & 1 & 0 & 0 & 0 & -1 & 0 & 1 & 0 \\ 1 & 1 & 1 & 0 & 0 & 0 & 0 & 0 & 0 & 1 \end{bmatrix} \qquad \mathbf{B} \equiv \begin{bmatrix} 50 \\ 10 \\ 30 \\ 7 \\ 60 \end{bmatrix} \qquad \mathbf{X}_0 \equiv \begin{bmatrix} x_4 \\ x_8 \\ x_6 \\ x_9 \\ x_{10} \end{bmatrix}$$

2.29 No; $[1, 2]^T$ is not on the line segment between the other two points.

2.30
$$x_1\begin{bmatrix}1\\2\end{bmatrix} + x_2\begin{bmatrix}2\\4\end{bmatrix} + x_3\begin{bmatrix}1\\0\end{bmatrix} + x_4\begin{bmatrix}0\\-1\end{bmatrix} + x_5\begin{bmatrix}0\\1\end{bmatrix} = \begin{bmatrix}3\\6\end{bmatrix}$$

2.31 (*b*) and (*c*) are basic feasible solutions; (*b*) is degenerate.

2.32
$$x_1\begin{bmatrix}1\\2\\-1\end{bmatrix} + x_2\begin{bmatrix}2\\1\\1\end{bmatrix} + x_3\begin{bmatrix}1\\0\\1\end{bmatrix} + x_4\begin{bmatrix}3\\3\\0\end{bmatrix} + x_5\begin{bmatrix}1\\0\\0\end{bmatrix} + x_6\begin{bmatrix}0\\1\\0\end{bmatrix} + x_7\begin{bmatrix}0\\0\\1\end{bmatrix} = \begin{bmatrix}9\\9\\0\end{bmatrix}$$

2.33 (*a*), (*c*), and (*d*) are basic feasible, degenerate solutions.

2.34 Let $f(\mathbf{X}) = \mathbf{C}^T\mathbf{X}$ assume its minimum, m, at $\mathbf{P}_1$ and $\mathbf{P}_2$. Then, for $\beta_1 \geq 0$, $\beta_2 \geq 0$, $\beta_1 + \beta_2 = 1$,
$$f(\beta_1\mathbf{P}_1 + \beta_2\mathbf{P}_2) = \beta_1 f(\mathbf{P}_1) + \beta_2 f(\mathbf{P}_2) = \beta_1 m + \beta_2 m = m$$

2.35 If the subset were linearly dependent, then the nonzero constants which satisfied (*2.1*) for this subset would also satisfy (*2.1*) for the entire set, with all extra constants taken as zero. This would imply that the set is linearly dependent, which it is not.

2.36 In (*2.1*), take the constant in front of the zero vector to be nonzero and all other constants as zero.

CHAPTER 3

3.15
$$x_1^* = \frac{5}{3}, \quad x_2^* = \frac{2}{3}; \quad z^* = \frac{7}{3}$$

3.16
$$x_1^* = \frac{9}{4}, \quad x_2^* = \frac{3}{2}; \quad z^* = \frac{51}{4}$$

3.17
$$x_1^* = \frac{16}{5}, \quad x_2^* = \frac{13}{5}; \quad z^* = \frac{42}{5}$$

3.18
$$x_1^* = 1285.7, \quad x_2^* = 1857.1; \quad z^* = -3142.8$$

3.19 No feasible solution exists.

3.20 $x_1^* = 0$, $x_2^* = 700$, $x_3^* = 500$, $x_4^* = 1000$, $x_5^* = 0$, $x_6^* = 0$; $z^* = 27\,600$. (Not only is this solution degenerate, but the solution includes a zero artificial variable among the basic variables. This may occur when one or more of the constraints is redundant. Here, the last constraint is the sum of the first two constraints minus the sum of the next two.)

3.21 $x_1^* = 23.8095$, $x_2^* = 32.1429$; $z^* = 591.667$.

3.22 $x_1^* = 0$, $x_2^* = 423.077$, $x_3^* = 0$, $x_4^* = 153.846$; $z^* = 1769.23$.

3.23 No maximum exists.

3.24 $x_1^* = 6.66667$, $x_2^* = 0.555556$, $x_3^* = 0$; $z^* = 41.6667$.

3.25 $x_1^* = 30$, $x_2^* = 0$, $x_3^* = 30$; $z^* = 270$.

3.26 $x_1^* = 69\,090.9$ bbl, $x_2^* = 17\,272.7$ bbl, $x_3^* = 2272.73$ bbl, $x_4^* = 2727.27$ bbl; $z^* = \$235\,454$.

3.27 $x_1^* = 0.90909$ oz, $x_2^* = 1.81818$ oz, $x_3^* = x_4^* = x_5^* = x_6^* = 0$; $z^* = 7.27273$¢.

3.28 $x_1^* = 50$, $x_2^* = 0$, $x_3^* = 145$, $x_4^* = 10$; $z^* = \$1250$.

3.29 $x_1^* = 93.75$ *gal*, $x_2^* = 125$ gal, $x_3^* = 56.25$ gal, $x_4^* = 0$, $x_5^* = 225$ gal; $z^* = \$403.125$

3.30 $x_1^* = 937.5$ lb, $x_2^* = 562.5$ lb, $x_3^* = 125$ lb; $z^* = 0$ lb.

3.31 $x_1^* = 1\frac{1}{3}$, $x_2^* = 0$; $z = 4$.

3.32 $x_1^* = 2/3$, $x_2^* = \ = 2\frac{2}{3}$, $x_3^* = 0$; $z^* = 11\frac{1}{3}$.

3.33 $x_1^* = 1$, $x_2^* = 0$, $x_3^* = 0$; $z^* = 1$.

3.34 $x_1^* = 0$, $x_2^* = 4$; $z^* = -12$.

3.35 $x_1^* = 0$, $x_2^* = 4$, $x_3^* = 0$; $z^* = -16$.

3.36 $x_1^* = 3$, $x_2^* = 1$; $z^* = 18$.

3.37 $x_1^* = 0$, $x_2^* = 2\frac{2}{3}$, $x_3^* = 0$, $x_4^* = 0$; $z^* = 2\frac{2}{3}$.

3.38 $x_1^* = 6$, $x_2^* = 0$, $x_3^* = 0$; $z^* = -6$.

3.39 $x_1^* = 1.56$, $x_2^* = 2.22$; $z^* = -10$.

3.40 $x_1^* = 5$, $x_2^* = 1$; $z^* = 49$.

3.41 $x_1^* = 7.5$, $x_2^* = 0$, $x_3^* = 0.5$; $z^* = 15.5$.

3.42 $x_1^* = 22.5$, $x_2^* = 0$, $x_3^* = 7.5$; $z^* = 225.0$.

CHAPTER 4

4.30

$$\begin{aligned} \text{maximize:}\quad & z = 4w_1 + 10w_2 + 6w_3 \\ \text{subject to:}\quad & 2w_1 + 4w_2 + \ \ w_3 \le 12 \\ & 6w_1 + 2w_2 + \ \ w_3 \le 26 \\ & 5w_1 + \ \ w_2 + 2w_3 \le 80 \\ \text{with:}\quad & \text{all variables nonnegative} \end{aligned}$$

4.31 Multiply the last constraint in the primal by -1.

$$\begin{aligned} \text{maximize:}\quad & z = 6w_1 + 5w_2 - 7w_3 \\ \text{subject to:}\quad & 2w_1 \qquad\quad - \ \ w_3 \le 3 \\ & 5w_1 + 4w_2 + 6w_3 \le 2 \\ & \qquad - 2w_2 - 3w_3 \le 1 \\ & w_1 + 2w_2 - 7w_3 \le 2 \\ & w_1 + 3w_2 - 5w_3 \le 3 \\ \text{with:}\quad & \text{all variables nonnegative} \end{aligned}$$

4.32

$$\begin{aligned} \text{minimize:} \quad & z = 25w_1 + 30w_2 + 35w_3 \\ \text{subject to:} \quad & 7w_1 + 2w_2 + 6w_3 \geq 6 \\ & -11w_1 - 8w_2 - w_3 \leq 1 \\ & 3w_1 + 6w_2 + 7w_3 \geq 3 \\ \text{with:} \quad & \text{all variables nonnegative} \end{aligned}$$

(The right-hand side of the second constraint has been rendered positive.)

4.33 Introduce surplus variable x_5 in the first constraint.

$$\begin{aligned} \text{minimize:} \quad & z = 16w_1 + 20w_2 \\ \text{subject to:} \quad & 8w_1 + 3w_2 \geq 10 \\ & 6w_1 \geq 15 \\ & -w_1 + 2w_2 \geq 20 \\ & w_1 - w_2 \geq 25 \\ & -w_1 \geq 0 \end{aligned}$$

(Observe that this program has no feasible solution.)

4.34

$$\begin{aligned} \text{maximize:} \quad & z = w_1 + 4w_2 \\ \text{subject to:} \quad & 3w_2 \leq 1 \\ & w_1 + w_2 \leq 2 \\ & w_1 + 3w_2 \leq 1 \end{aligned}$$

4.35 $z^* = 72$ in both cases.

4.36 $x_2^* = 1.25$, $x_1^* = x_3^* = x_4^* = x_5^* = 0$; $z^* = 2.5$.

4.37 Multiply each constraint by -1. Then the symmetric dual is:

$$\begin{aligned} \text{minimize:} \quad & z = -6w_1 - 12w_2 - 4w_3 \\ \text{subject to:} \quad & -6w_1 - 4w_2 - w_3 \geq 5 \\ & -w_1 - 3w_2 - 2w_3 \geq 2 \\ \text{with:} \quad & \text{all variables nonnegative} \end{aligned}$$

This program has no feasible solution.

4.38

$$\begin{aligned} \text{maximize:} \quad & z = 5w_1 - 5w_2 \\ \text{subject to:} \quad & w_1 + w_2 \leq -1 \\ & -w_1 - w_2 \leq -1 \end{aligned}$$

4.39 The second slack variable in the optimal solution to the primal, x_5^*, is positive; hence w_2^* must be zero (as it is, in the last row of Tableau 2).

4.40 $x_1^* = 1/3$, $x_2^* = 0$, $x_3^* = 2/3$; $w_1^* = 0$, $w_2^* = 1/3$.

4.41 From the result of Problem 4.9,

$$\mathbf{B}^T\mathbf{W}_0 = \mathbf{C}^T\mathbf{X}_0 \geq \mathbf{B}^T\mathbf{W} \qquad \text{and} \qquad \mathbf{C}^T\mathbf{X}_0 = \mathbf{B}^T\mathbf{W}_0 \leq \mathbf{C}^T\mathbf{X}$$

Therefore, $\mathbf{W}_0$ is optimal and $\mathbf{X}_0$ is optimal.

4.42 $x_1^* = 0, x_2^* = 0, x_3^* = 3; z^* = 9.$

4.43 $x_1^* = 20, x_2^* = 13.33; z^* = 113.33.$

4.44 (*a*) $x_1^* = 0, x_2^* = 4.86, x_3^* = 2.57; z^* = 29.71.$
(*b*) $x_1^* = 6.80, x_2^* = 0, x_3^* = 1.60; z^* = 38.80.$
(*c*) $x_1^* = 0, x_2^* = 0, x_3^* = 5; z^* = 35.$

4.45 (*a*) $x_1^* = 5, x_2^* = 0, x_3^* = 0; z^* = 25.$
(*b*) $x_1^* = 0, x_2^* = 0, x_3^* = 3; z^* = 36.$
(*c*) $x_1^* = 3.86, x_2^* = 0, x_3^* = 1.71; z^* = 51.$

4.46 (*a*) $x_1^* = 4.71, x_2^* = 16.47; z^* = 447.06.$
(*b*) $x_1^* = 16.67, x_2^* = 0; z^* = 416.67.$
(*c*) $x_1^* = 15.62, x_2^* = 5; z^* = 490.62.$

4.47 (*a*) $x_1^* = 17.5; x_2^* = 0; z^* = 612.5.$
(*b*) $x_1^* = 0, x_2^* = 10; z^* = 500.$
(*c*) $x_1^* = 5, x_2^* = 15; z^* = 925.$

4.48 (*a*) $x_1^* = 6, x_2^* = 0; z^* = 12.$
(*b*) $x_1^* = 0, x_2^* = 7.5; z^* = 22.5.$
(*c*) $x_1^* = 0, x_2^* = 4; z^* = 12.$

4.49 (*a*) $x_1^* = 0, x_2^* = 3, x_3^* = 0; z^* = 6.$
(*b*) $x_1^* = 0, x_2^* = 5, x_3^* = 0; z^* = 10.$
(*c*) $x_1^* = 0, x_2^* = 2, x_3^* = 1; z^* = 7.$

4.50 (*a*) $x_1^* = 20, x_2^* = 0; z^* = 400.$
(*b*) $x_1^* = 16.67, x_2^* = 0; z^* = 333.33.$
(*c*) $x_1^* = 15, x_2^* = 0; z^* = 300.$

4.51 (*a*) $x_1^* = 1.5, x_2^* = 5.25, x_3^* = 0; z^* = 48.75.$
(*b*) $x_1^* = 0, x_2^* = 4.5, x_3^* = 0; z^* = 40.5.$
(*c*) $x_1^* = 0, x_2^* = 4.5, x_3^* = 3; z^* = 43.5.$

4.52 $x_1^* = 3.82, x_2^* = 0.73; z^* = 12.18.$

4.53 $x_1^* = 25.71, x_2^* = 17.14; z^* = 111.43.$

4.54 $x_1^* = 3.33, x_2^* = 0, x_3^* = 0; z^* = -3.33.$

4.55 (*a*) $x_1^* = 2, x_2^* = 0, x_3^* = 2; z^* = 14.$
(*b*) $x_1^* = 0, x_2^* = 0, x_3^* = 4; z^* = 24.$

4.56 (*a*) $x_1^* = 6.8, x_2^* = 0, x_3^* = 1.6, x_4^* = 0; z^* = 26.8.$
(*b*) $x_1^* = 0, x_2^* = 0, x_3^* = 2.57, x_4^* = 4.86; z^* = 34.57.$

4.57 (*a*) Redundant constraint.
(*b*) $x_1^* = 0, x_2^* = 3, x_3^* = 3; z^* = -9.$

4.58 (*a*) $x_1^* = 4.4, x_2^* = 0, x_3^* = 2.8; z^* = 24.4.$
(*b*) Redundant constraint.
(*c*) Infeasible solution.

CHAPTER 5

5.18 $x_1^* = 5, x_2^* = 0, x_3^* = 5; z^* = 50.$

5.19 $x_1^* = 23/17, x_2^* = 25/17, x_3^* = 21/17; z^* = 140/17.$

5.20 $x_1^* = 0, x_2^* = 4, x_3^* = 1; z^* = 17.$

5.21 $x_1^* = 9/7, x_2^* = 15/7; z^* = 90/7.$

5.22 $x_1^* = 5, x_2^* = 6, x_3^* = 0; z^* = 19.$

5.23 $x_1^* = 20/3, x_2^* = 5/9, x_3^* = 0; z^* = 41\frac{2}{3}.$

5.24 $x_1^* = 0, x_2^* = 6, x_3^* = 0; z^* = -12.$

5.25 $x_1^* = 1.2, x_2^* = 0.6; z^* = 2.4.$

5.26 $x_1^* = 30, x_2^* = 0, x_3^* = 30; z^* = 270.$

5.27 $x_1^* = 5.4545, x_2^* = 0, x_3^* = 0.9091; z^* = 7.2727.$

5.28 $x_1 = 0.2093, x_2 = 0.4574, x_3 = 0.3333; z = 0.2093.$

5.29 $x_1 = 0.4574, x_2 = 0.2093, x_3 = 0.3333; z = 0.2093.$

5.30 $x_1 = 0.3333, x_2 = 0.2093, x_3 = 0.4574; z = 0.2093.$

5.31 $x_1 = 0.1842, x_2 = 0.1842, x_3 = 0.3598, x_4 = 0.272; z = 0.1842.$

5.32 $x_1 = 0.3484, x_2 = 0.1515, x_3 = 0.25, x_4 = 0.25; z = 0.1515.$

5.33 $x_1 = 0.25, x_2 = 0.3484, x_3 = 0.25, x_4 = 0.1515; z = 0.4546.$

5.34 $x_1 = 0.2064, x_2 = 0.108, x_3 = 0.2064, x_4 = 0.2064, x_5 = 0.2728; z = 0.0737.$

5.35 $x_1 = 0.2734, x_2 = 0.1312, x_3 = 0.1541, x_4 = 0.2049, x_5 = 0.2366; z = 0.2626.$

CHAPTER 6

6.9 $x_1^* = 1, x_2^* = 3, x_3^* = 0; z^* = 7.$

6.10 $x_1^* = x_2^* = x_4^* = 0, x_3^* = 2; z^* = 6.$

6.11 $x_1^* = 0, x_2^* = 7, x_3^* = 1; z^* = 71.$

6.12 Infeasible.

6.13 Develop sites B, C, D, and F, for a net capacity of 55 ton/wk.

CHAPTER 7

7.8 $x_1^* = 1, x_2^* = 4, x_3^* = 0; z^* = 37.$

7.9 $x_1^* = 3, x_2^* = 0; z^* = \$360.$

7.10 $x_1^* = 1, x_2^* = 3, x_3^* = 0; z^* = 7.$

7.11 $x_1^* = x_2^* = x_4^* = 0, x_3^* = 2; z^* = 6.$

7.12 $x_1^* = 0, x_2^* = 7, x_3^* = 1; z^* = 71.$

7.13 $x_1^* = 1, x_1^* = 3, x_3^* = 0; z^* = 7.$

CHAPTER 8

8.9 Transportation cost equals production cost plus shipping cost.

	I	II	III	IV	(dummy) V	Supply	u_i
A	1.21 **3200**	1.23 **200**	1.19 (0)	1.29 (0.06)	0 **4100**	7500	0
B	1.07 **1000**	1.11 (0.02)	1.05 **6300**	1.09 **2700**	0 (0.14)	10000	−0.14
C	1.17 (0.03)	1.16 **8100**	1.15 (0.03)	1.18 (0.02)	0 (0.07)	8100	−0.07
Demand	4200	8300	6300	2700	4100		
v_j	1.21	1.23	1.19	1.23	0		

Plant A produces 3200 units for customer I, 200 for customer II, and remains with an unused capacity of 400; plant B produces 1000 units for customer I, 6300 for customer III, and 2700 for customer IV; plant C produces 8100 units for customer II.

8.10

	1	2	3	4	5	Supply	u_i
1	145 (18)	122 (17)	130 (11)	95 **0**	115 **1**	1	95
2	80 **0**	63 (5)	85 (13)	48 **1**	78 (10)	1	48
3	121 (20)	107 (28)	93 **1**	69 **0**	95 (6)	1	69
4	118 (13)	83 **1**	116 (19)	80 (7)	105 (12)	1	73
5	97 **1**	75 **0**	120 (31)	80 (15)	111 (26)	1	65
Demand	1	1	1	1	1		
v_j	32	10	24	0	20		

Lawyer 1 to case 5, lawyer 2 to case 4, lawyer 3 to case 3, lawyer 4 to case 2, and lawyer 5 to case 1.

8.11

	1	2	3	(dummy) 4	Supply	u_i
1	92 (7)	89 (1)	90 **320 000**	0 (3)	320 000	88
2	91 (3)	91 **120 000**	95 (2)	0 **150 000**	270 000	91
3	**87** **100 000**	**90** **60 000**	**92** **30 000**	**0** (1)	190 000	90
Demand	100 000	180 000	350 000	150 000		
v_j	−3	0	2	−91		

Vender 1 to deliver 320 000 gal to airport 3; vendor 2 to deliver 120 000 gal to airport 2 and will remain with 150 000 gal; vendor 3 to deliver 100 000 gal, 60 000 gal, and 30 000 gal, respectively, to airports 1, 2, and 3.

8.12 Maximizing profit is equivalent to minimizing negative profit.

	1	2	3	4	Supply	u_i
A	−10 **1800**	−6 **700**	−6 (1)	−4 (2)	2500	0
B	−2 (8)	−6 (0)	−7 **550**	−6 **1550**	2100	0
(dummy) C	0 (4)	0 **1600**	0 (1)	0 **200**	1800	6
Demand	1800	2300	550	1750		
v_j	−10	−6	−7	−6		

Plant A to supply chains 1 and 2 with 1800 and 700 loaves, respectively; plant B to supply chains 3 and 4 with 550 and 1550 loaves, respectively.

8.13

	City 1 Elders	City 1 Others	City 2 Elders	City 2 Others	City 3 Elders	City 3 Others	Supply	u_i
1	3 (0)	3 **0.175**	3 **0.260**	3 **0.470**	6 **0.195**	6 (3)	1.100	0
2	1 **0.325**	1 **0.575**	4 (3)	4 (3)	7 (3)	7 (6)	0.900	−2
(dummy) 3	100 (100)	0 (0)	100 (100)	0 **0.330**	100 (97)	0 **0.650**	0.980	−3
Demand	0.325	0.750	0.260	0.800	0.195	0.650		
v_j	3	3	3	3	6	3		

8.14 If c is subtracted from each element of the rth row and d from each element of the tth column, then the new objective, z', is related to the old objective, z, by $z' = z - ca_r - db_t$. Thus, $z' - z$ is a constant, and whatever allocation minimizes the one objective also minimizes the other.

CHAPTER 9

9.10

	1	2	3	(dummy) 4	Supply	u_i
Month 1, Regular	35 **1**	38 (0)	41 (6)	0 (5)	1	−5
Month 1, Overtime	39 **1**	42 **1**	45 (6)	0 (1)	2	−1
Month 2, Regular	1000 (960)	43 **1**	46 (6)	0 **1**	2	0
Month 2, Overtime	1000 (960)	47 (4)	50 (10)	0 **2**	2	0
Month 3, Regular	1000 (960)	1000 (957)	40 **2**	0 **1**	3	0
Month 3, Overtime	1000 (960)	1000 (957)	45 (5)	0 **2**	2	0
Demand	2	2	2	6		
v_j	40	43	40	0		

9.11

	Oct.	Nov.	Dec.	Jan.	Feb.	dummy	Supply	u_i
Aug.	73 (0)	83 (0)	93 **4.5**	103 **2.2**	113 **3.1**	0 **2.7**	12.5	0
Sept.	68 **7.1**	78 **3.9**	88 (0)	98 (0)	108 (0)	0 (5)	11.0	−5
Oct.	1000 (935)	75 **9.3**	85 **0.2**	95 (0)	105 (0)	0 (8)	9.5	−8
Nov.	1000 (968)	1000 (958)	52 **8.1**	62 (0)	72 (0)	0 (41)	8.1	−41
Dec.	1000 (982)	1000 (972)	1000 (962)	48 **5.5**	58 (0)	0 (55)	5.5	−55
Demand	7.1	13.2	12.8	7.7	3.1	2.7		
v_j	73	83	93	103	113	0		

9.12

	2	3	4	6	(dummy) 7	Supply	u_i
1	5 **20**	3 (11)	3 (1)	100 (91)	0 (8)	20	2
2	0 **35**	100 (113)	100 (103)	4 **35**	0 (13)	70	−3
3	14 (1)	0 **70**	10 **10**	100 (83)	0 **10**	90	10
4	3 **40**	100 (110)	0 **30**	8 (1)	0 (10)	70	0
5	100 (91)	100 (104)	6 **30**	15 (2)	0 (4)	30	6
Demand	95	70	70	35	10		
v_j	3	−10	0	7	−10		

9.13

	3	4	5	6	7	(dummy) 8	Supply	u_i
1	578 **135**	592 **15**	10000 (7094)	10000 (7101)	10000 (7106)	0 (10)	150	578
2	615 (27)	602 **65**	10000 (7084)	10000 (7091)	10000 (7096)	0 **105**	170	588
3	0 **185**	10000 (9986)	2328 **75**	2321 **60**	2335 (19)	0 (588)	320	0
4	10000 (10014)	0 **240**	2320 (6)	2313 (6)	2302 **80**	0 (602)	320	−14
Demand	320	320	75	60	80	105		
v_j	0	14	2328	2321	2316	−588		

75 units from location 1 through location 3 to location 5; 60 units from location 1 through location 3 to location 6; 15 units from location 1 through location 4 to location 7; 65 units from location 2 through location 4 to location 7.

9.14

	1	2	3	4	5	Supply	u_i
1	0 **34**	7 (7)	12 **7**	25 **8**	65 (25)	49	0
2	7 (7)	0 **34**	22 (10)	25 **12**	75 (35)	46	0
3	12 (24)	22 (34)	0 **34**	17 (4)	28 (0)	34	−12
4	25 (50)	25 (50)	17 (30)	0 **32**	15 **2**	34	−25
5	65 (105)	75 (115)	28 (56)	15 (30)	0 **34**	34	−40
(dummy) 6	0 (40)	0 (40)	0 (28)	0 (15)	0 7	7	−40
Demand	34	34	41	52	43		
v_j	0	0	12	25	40		

City 3 receives its seven cars from city 1. City 4 receives a total of 20 cars from cities 1 and 2, keeps 18 of them, and transships two to city 5. City 5 lacks seven cars in the final disposition.

9.15 Store 1 to company 4, store 2 to company 3, store 3 to company 2, and store 4 to company 1; $z^* = \$325\,400$.

9.16 Lawyer 1 to case 5, lawyer 2 to case 4, lawyer 3 to case 3, lawyer 4 to case 2, and lawyer 5 to case 1; $z^* = 436$ h.

9.17 $1 \to 2 \to 4 \to 5 \to 3 \to 1$, with $z^* = 270$.

9.18 $1 \to 4 \to 3 \to 5 \to 2 \to 1$, with $z^* = 14$.

9.21 For the cost matrix

$$\begin{bmatrix} 1000 & 1 & 1 & 1 & 1 \\ 1 & 1000 & 1000 & 1000 & 1 \\ 1 & 1000 & 1000 & 1 & 1000 \\ 1 & 1000 & 1 & 1000 & 1000 \\ 1 & 1 & 1000 & 1000 & 1000 \end{bmatrix}$$

the closed, self-interesecting route $1 \to 3 \to 4 \to 1 \to 2 \to 5 \to 1$ is cheaper than any circuit of length 5.

CHAPTER 10

10.14 (*a*) Local and global maximum at $x = 1$, boundary (local) and global minimum at $x = 0$, boundary (local) and global minimum at $x = 3$. (*b*) Boundary (local) and global maximum at $x = 1$, local and global minimum at $x = 3$, boundary (local) and global maximum at $x = 4$. (*c*) Boundary (local) and global minimum at $x = -1$, local maximum at $x = 1$, local minimum at $x = 3$, boundary (local) and global maximum at $x = 5$.

10.15 (*a*) Boundary (local) maximum at $x = 0$, local and global minimum at $x = 1$, boundary (local) and global maximum at $x = 3$. (*b*) Boundary (local) and global maximum at $x = 0$, local and global minimum at $x = 1$, boundary (local) and global maximum at $x = 2$. (*c*) Boundary (local) maximum at $x = 0$, local and global minimum at $x = 1$. There is no global maximum.

10.16 (*a*) Local and global minimum at $x = 1$. (*b*) Local and global maximum at $x = -1$. (*c*) Boundary (local) and local minimum at $x = 5$, boundary (local) and local maximum at $x = 10$.

10.17 $f''(x) = 6(x - 2)$, which is negative for $x < 2$ and positive for $x > 2$.

10.18 (Strictly) convex on $(0, \infty)$ and (strictly) concave on $(-\infty, 0)$.

10.19 $x^* = 1.9375$, with $z^* = 4.002$.

10.20 $x^* = 3\pi/4 = 2.356$, with $z^* = 3.926$; $\epsilon = \pi/8 = 0.393$.

10.21 $x^* = 1.905$, with $z^* = 4.005$.

10.22 $x^* = 2.175$, with $z^* = 3.893$ and $\epsilon' = 0.242$.

10.23 $x^* = 1.931$, with $z^* = 4.002$.

10.24 $x^* = 2.225$, with $z^* = 3.928$; $\epsilon = 0.283$.

CHAPTER 11

11.15 $x_1^* = 2.5$, $x_2^* = 3$, $x_3^* = 0.4$; $z^* = 0$.

11.16 $z^* = 1$ occurs at many points, one being $x_1^* = x_2^* = 0$.

11.17 There is a local minimum at $x_1 = 12$, $x_2 = 24$, with $z = -0.001157$, but there is no global minimum (the function approaches $-\infty$ as x_1 and x_2 approach zero through negative values).

11.18 $z^* = -0.6495$ occurs at many points, one being $x_1^* = \pi/3$, $x_2^* = \pi/3$.

11.19 $x_1^* = 0$, $x_2^* = \pm 1$; $z^* = 0.7358$.

11.20 $x_1^* = x_2^* = 1.496$, $\tilde{x}_3^* = 1$; $z^* = -1$.

11.21 $x_1^* = 2$, $x_2^* = 3$; $z^* = -10.076$.

11.22 $x_1^* = x_2^* = 1$; $z^* = 0$.

11.23 $A = 1.47 \times 10^{-30}$, $m = 0.04$. In 1980, $N = 36\,597$.

11.24 $\mathbf{H}_f = 2\mathbf{A}$.

CHAPTER 12

12.16

$$\begin{aligned} \text{maximize:} \quad & z = x_1^4 e^{-0.01(x_1 x_2)^2} \\ \text{subject to:} \quad & 2x_1^2 + x_2^2 - 10 = 0 \end{aligned}$$

12.17

$$\begin{aligned} \text{maximize:} \quad & z = -(x_1 - 1)^2 - x_2^2 \\ \text{subject to:} \quad & x_1^2 + x_2^2 - 4 = 0 \end{aligned}$$

12.18

$$\begin{aligned} \text{maximize:} \quad & z = 6x_1 - 2x_1^2 + 2x_1x_2 - 2x_2^2 \\ \text{subject to:} \quad & x_1 + x_2 - 2 \le 0 \\ \text{with:} \quad & \text{all variables nonnegative} \end{aligned}$$

12.19

$$\begin{aligned} \text{maximize:} \quad & z = -24x_1^2 - 14x_2^2 - 46x_3^2 + 28x_1x_2 + 24x_2x_3 - 34x_2x_3 \\ \text{subject to:} \quad & -11x_1 - 9x_2 - 12x_3 + 1000 \le 0 \\ & x_2 + x_3 - 40 \le 0 \\ & -x_2 - x_3 + 40 \le 0 \\ \text{with:} \quad & \text{all variables nonnegative} \end{aligned}$$

12.20

$$\begin{aligned} \text{maximize:} \quad & z = 3x_1x_3 + 4x_2x_3 \\ \text{subject to:} \quad & x_2^2 + x_3^2 - 4 \le 0 \\ & -x_2^2 - x_3^2 + 4 \le 0 \\ & x_1x_3 - 3 \le 0 \\ & -x_1x_3 + 3 \le 0 \\ \text{with:} \quad & \text{all variables nonnegative} \end{aligned}$$

12.21 $x_1^* = 2$, $x_2^* = 0$; $z^* = 1$.

12.22 $x_1^* = x_2^* = 0$, $x_3^* = -1$; $z^* = -1$.

12.23 $x_1^* = 0$, $x_2^* = 4$, $x_3^* = 17/3$; $z^* = 68/3$.

12.24 $x_1^* = x_2^* = 0$; $z^* = 1$.

12.25 $x_1^* = \pm 3/\sqrt{2}$, $x_2^* = x_3^* = \pm\sqrt{2}$; $z^* = 17$. To satisfy the nonnegativity conditions, take the plus sign in each case.

12.26 $x_1^* = \pm\sqrt{5}$, $x_2^* = 0$; $z^* = 25$.

12.27 $z^* = 7.980$ at a number of points, one of which is $x_1^* = x_2^* = 1.911$, $x_3^* = 0.822$.

12.28 $z^* = 11$ at six points, one of which is $x_1^* = 3$, $x_2^* = x_3^* = 1$.

12.29 $x_1^* = 3.512$, $x_2^* = 0.217$, $x_3^* = 3.552$; $z^* = 38.28$.

12.30 No global minimum exists: $z \to 1$ as $x_1 \to 0$, keeping (x_1, x_2, x_3) feasible.

12.31 $x_1^* = 1.5$, $x_2^* = 0.5$; $z^* = 5.5$.

12.32 $x_1^* = 58.18$, $x_2^* = 40$, $x_3^* = 0$; $z^* = 38\,476$.

12.33 $x_1^* = x_2^* = 5000$, $x_3^* = 0$; $z^* = 9 \times 10^7$.

12.34 $x_1^* = 0.823$, $x_2^* = 0.911$; $z^* = 1.393$.

12.35 $x_1^* = 1/3$, $x_2^* = 5/3$, $z^* = 2.249$.

12.36 $x_1^* = 1.4$, $x_2^* = 0.8$; $z^* = 1.8$.

12.37 $x_1^* = 1.07$, $x_2^* = 2.80$; $z^* = 9.47$.

CHAPTER 13

13.8 $z^* = 13$, for the tree $\{AD, BD, CE, DE, DG, EH, GF\}$.

13.9 $z^* = 55$, for a number of trees including $\{AD, AC, DG, BF, BE, FG, GH, HI, GJ, HK, KL\}$.

13.10 $z^* = 25$, for the path $\{AD, DG, GH, HK, KL\}$ or the path $\{AB, BF, FG, GH, HK, KL\}$.

13.11 $z^* = 14$ units.

13.12 $z^* = 21$ units.

13.13 $z^* = 123$ units.

13.14 $z^* = 17$ units.

13.15 $z^* = \$2400$ (50 units at \$48 each), via Los Angeles to Phoenix to Chicago to New York.

13.16 Initially, either KEEP, KEEP, KEEP or KEEP, BUY, BUY; thereafter, buy a new truck each year.

13.17 (*a*) 22; (*c*) 19.

13.18 19 units.

13.19 The cut is $\{BG, EG, CG, FG, DG\}$. Its cut value, 1, represents an upper bound on the flow, and since a flow of 1 unit is feasible (by Problem 13.5), it is the maximal flow.

CHAPTER 14

14.7

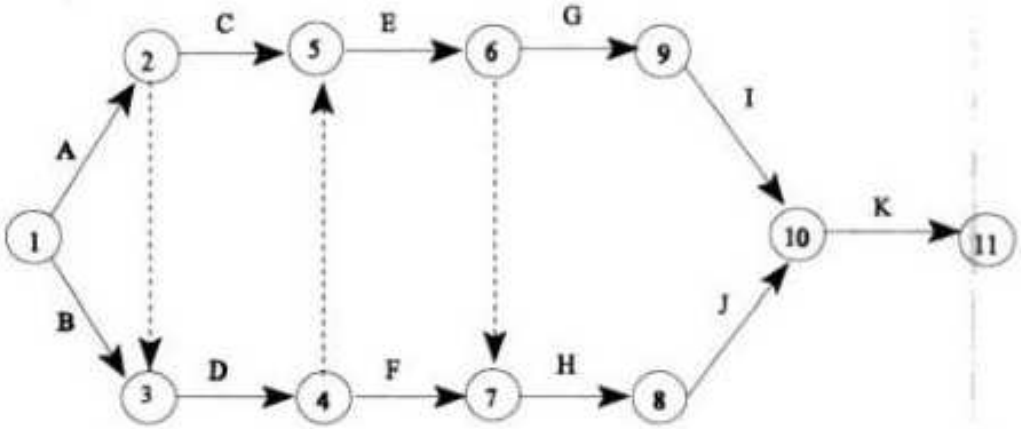

14.8

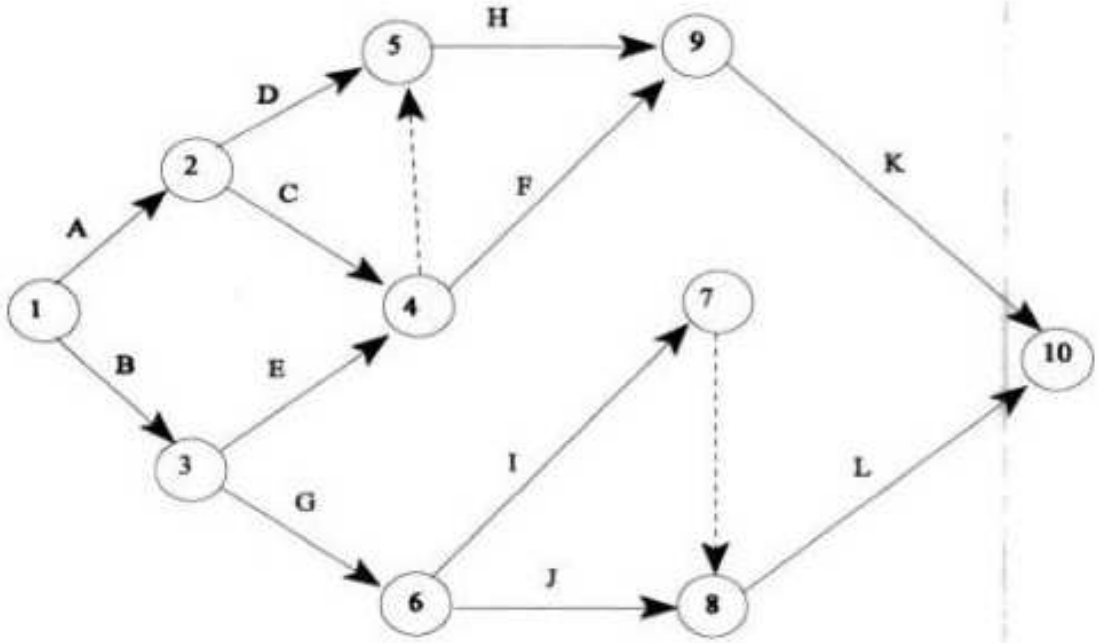

14.9 (*a*) Critical path is A, D, F, H, J, K.
(*b*) Yes; since the desired completion time (30 days) is less than the latest completion time (38 days).
(*c*) No; since activity H lies on the critical path, any delay in H will cause a delay in the project.
(*d*) Yes; since activity E does not lie on the critical path, it can be delayed to some extent without causing a delay in the project.

14.10 Critical path is A, G, J, K.

Activity	A	B	C	D	E	F	G	H	I	J	K
TF	0	15	27	27	15	16	0	16	15	0	0
FF	0	0	0	12	0	0	0	16	15	0	0

14.11 (*a*) Critical path is A, C, G, H; 25 days.
(*b*) 0.475.

14.12 (*a*)

Activity	A	B	C	D	E	F	G	H	I	J	K
E (Time)	3	2	6	7	3	5	8	12	6	1	11
Variance	0.44	0.11	2.78	1	0.11	4	1.78	1.78	1.78	0	1.78

(*b*) Critical path is A, D, F, H, J, K.
(*c*) 39.
(*d*) 0.1587; yes, since the probability of completing the project by February 5 is low.

14.13 (*a*) Critical path is A, C, E, G.
(*b*) 26 days; $3705.

(*c*)

Step	Crash Activity	Critical Path	Project Time	Project Cost
1	A by 2 days	A, C, E, G	24 days	$3755
2	C by 1 day	A, C, E, G	23 days	$3830
3	E by 1 day	A, C, E, G	22 days	$3955

14.14 (*a*) Critical path is A, B, C, F, G.
(*b*) 45 weeks; $580 000.

(*c*)

Step	Crash Activity	Critical Path	Project Time	Project Cost
1	B by 1 week	A, B, C, F, G A, D, E, F, G	44 weeks	$595 000
2	A by 2 weeks B by 1 week D by 1 week	A, B, C, F, G A, D, E, F, G	41 weeks	$660 000

CHAPTER 15

15.26 (*a*) 48; (*b*) \$480, \$480; (*c*) 8.

15.27 (*a*) $Q^* = 707.11$; (*b*) $F = 14.14$; (*c*) $TC = \$707.11$.

15.28 $Q^* = 91.29$.

15.29 (*a*) 2194.27; (*b*) \$1139.34; (*c*) 22.79; (*d*) 3.37 days.

15.30 (*a*) $Q^* = 12\,247$; (*b*) $TC = \$1633$; (*c*) 8.17; (*d*) 10.21 days; (e) 8165.

15.31 (*a*) $Q^* = 14\,142$, $TC = \$1414.2$; (*b*) $Q^* = 11\,547$, $TC = \$1732.04$.

15.32 (*a*) $Q^* = 38\,730$; (*b*) 5.16; (*c*) 38.73 days; (*d*) 7746; (*e*) \$1549.2.

15.33 (*a*) 4000; (*b*) \$992 395.00.

15.34 (*a*) 108.79; (*b*) 6768.54.

15.35 (*a*) 751; (*b*) \$39 884.09.

15.36 (*a*) 658.28; (*b*) \$30 296.23.

15.37 (*a*) 20 000; (*b*) \$32 535.00; (*c*) 4.5; (*d*) 80 days.

15.38 (*a*) 900; (*b*) \$6627.00.

15.39 (*a*) 1500; (*b*) \$137 687.50.

15.40 (*a*) 734; (*b*) 84.

15.41 3.

15.42 5420.

15.43 0.0367.

15.44 (*a*) 439.13; (*b*) 39.13.

15.45 3460.

15.46 5048.29.

15.47 (*a*) 0.539; (*b*) 5.39.

15.48 (*a*) 0.8508; (*b*) 20.8.

15.49 (*a*) 14; (*b*) 84; (*c*) 0.128; (*d*) 0.04.

15.50 (*a*) $Q^* = 190.98$; (*b*) $SS = 13.98$.

15.51 (*a*) 119.51; (*b*) 35.51.

15.52 0.121.

15.53 0.124.

15.54 129.

15.55 7.

15.56 6.

15.57 (*a*) 0.74; (*b*) 5.

15.58 3.

15.59 6.

15.60 \$37.73, \$17.14.

CHAPTER 16

16.37 (*a*) $Y = 1.038 + 2.190X$; $Y_7 = 66.734$.
(*b*) $r = 0.989$; $r^2 = 0.979$.

16.38 (*a*) $Y = 41 + 3.286X$; $Y_7 = 64.000$.
(*b*) $r^2 = 0.976$.

16.39 The log-linear model of Problem 16.7 has the highest coefficient of determination.

16.40 (*a*) Time Series A: $Y = 6.800 + 1.582X$; $Y_{11} = 24.200$.
Time Series B: $Y = 14.133 + 0.212X$; $Y_{11} = 16.467$.
(*b*) Time Series A: $r^2 = 0.752$; Time Series B: $r^2 = 0.307$.

16.41 (*a*) $Y = 25.718 + 2.182X$; $Y_{13} = 54.082$; $Y_{14} = 56.264$; $Y_{15} = 58.445$; $Y_{16} = 60.627$.

16.42 (63.933, 69.536).

16.43 (61.032, 66.968).

16.44 (34.899, 73.265).

16.45 $Y = e^{5.556 + 0.094X}$; $r^2 = 0.980$.

16.46 The time series linear regression model (Problem 16.5) has the highest coefficient of determination.

16.47 $Y = 10^{1.623}(10^{0.027X})$ or $Y = 41.976(10^{0.027X})$; $r^2 = 0.988$; $Y_7 = 64.9$.

16.48 $Y_{14} = 866.65$.

16.49 The exponential smoothing model ($\alpha = 0.9$) has the least MAD; $F_6 = 12.881$.

16.50 (*a*) The MA(7) has the least MAD (MAD = 94.5); (*b*) $F_{\text{week 4, Sun}} = 229.9$.

16.51 (a) Alpha value of 0.9 gives the least MAD (MAD = 89.33); (b) $F_{\text{week 4, Sun}} = 392.77$.

16.52 The exponential smoothing model with $\alpha = 0.9$ has the least MAD.

16.53 Alpha value of 0.6.

16.54 $F_9 = 35.67$.

16.55 $F_7 = 62.95$.

16.56 The exponential smoothing with trend model of $\alpha = 0.1$, $\beta = 0.1$ gives the least MSE (1.69).

16.57 $Q_1 = 0.813$; $Q_2 = 1.100$; $Q_3 = 1.125$; $Q_4 = 0.962$.

CHAPTER 17

17.11 (*a*) B_1 and B_4 are dominated by B_2. Unstable.

$$\mathbf{X}^* = \left[\frac{10}{11}, \frac{1}{11}\right] \qquad \mathbf{Y}^* = \left[0, \frac{10}{11}, \frac{1}{11}, 0\right] \qquad G^* = -\frac{12}{11}$$

(*b*) B_3 is dominated by B_1, and B_4 is dominated by B_2. Unstable.

$$\mathbf{X}^* = \left[\frac{1}{2}, \frac{1}{2}\right] \qquad \mathbf{Y}^* = \left[\frac{1}{2}, \frac{1}{2}, 0, 0\right] \qquad G^* = 0$$

(*c*) B_1, B_2, and B_4 are dominated by B_3. Stable, with $G^* = -1$. Row player should use A_2 only; column player should use B_3 only.

(*d*) Unstable.

$$\mathbf{X}^* = \mathbf{Y}^* = [2/7, 4/7, 1/7] \qquad G^* = -4/7$$

(*e*) A_3 is dominated by A_2, and B_1 is dominated by B_3.

$$\mathbf{X}^* = [2/7, 5/7, 0] \qquad \mathbf{Y}^* = [0, 5/7, 2/7] \qquad G^* = 32/7$$

(*f*) A_1, A_3, and A_4 are dominated by A_2. Stable, with $G^* = 0$. Row player should use A_2 only; column player should use B_1 only.

17.12 $\mathbf{X}^* = [1/4, 3/4]$, $\mathbf{Y}^* = [3/4, 1/4, 0]$; $G^* = 68.125$.

17.13 Both chains should locate in town C, with chain I capturing 65 percent of the total business.

17.14 Write "A_1" on one slip of paper, "A_2" on three slips, and "A_4" on eleven slips. Draw a slip (with replacement) before each play.

17.15 Army A uses the forest route with probabillity 1/4 and the flatlands route with probability 3/4; army B attacks either route with probability 1/2. The value of the game (to army B) is $G^* = 5/2$ strikes.

17.16 Blue Army attacks the 20-million-dollar airfield at full force with probability 4/9 and attacks the other airfield at full force with probability 5/9. Red Army defends the expensive airfield at full force with probability 2/3 and splits its forces between airfields with probability 1/3. $G^* = 6\frac{2}{3}$ million dollars.

17.17 Both should offer 2 yards.

17.18 I-95 with probability 0.53 and the back roads with probability 0.47.

17.19 $\mathbf{X} = [5/12, 7/12, 0]$, $\mathbf{Y}^* = [4/9, 5/9, 0]$.

17.20 From $g_{ij} = -g_{ji}$ $(i, j = 1, 2, \ldots, r)$, it follows that $E(\mathbf{X}, \mathbf{Y}) = -E(\mathbf{Y}, \mathbf{X})$ for any two r-dimensional probability vectors. Then,

$$M_t = \max_{\mathbf{X}} (\min_{\mathbf{Y}} E(\mathbf{X}, \mathbf{Y})) = \max_{\mathbf{X}} (\min_{\mathbf{Y}} - E(\mathbf{Y}, \mathbf{X}))$$

$$= -\min_{\mathbf{X}} (\max_{\mathbf{Y}} E(\mathbf{Y}, \mathbf{X})) = -\min_{\mathbf{Y}} (\max_{\mathbf{X}} E(\mathbf{X}, \mathbf{Y})) = -M_{tt}$$

But $M_I = M_{II}$, by the minimax theorem. Hence,

$$M_I = M_{II} = 0 = G^*$$

17.21 No; $G^* = -\$0.25$.

CHAPTER 18

18.16 To take offer under minimax or middle-of-the-road, not to take offer under optimistic.

18.17 To extend credit.

18.18 To convert.

18.19 Not to take offer.

18.20 Not to extend credit.

18.21 See Fig. A-1 (gains in thousands of dollars). To test stand-alone phase, then to convert to new process only if stand-alone phase is efficient.

18.22 Not to order lie detector tests, and to fire the treasurer.

18.23 To test market, then to go national only if test is highly or moderately successful.

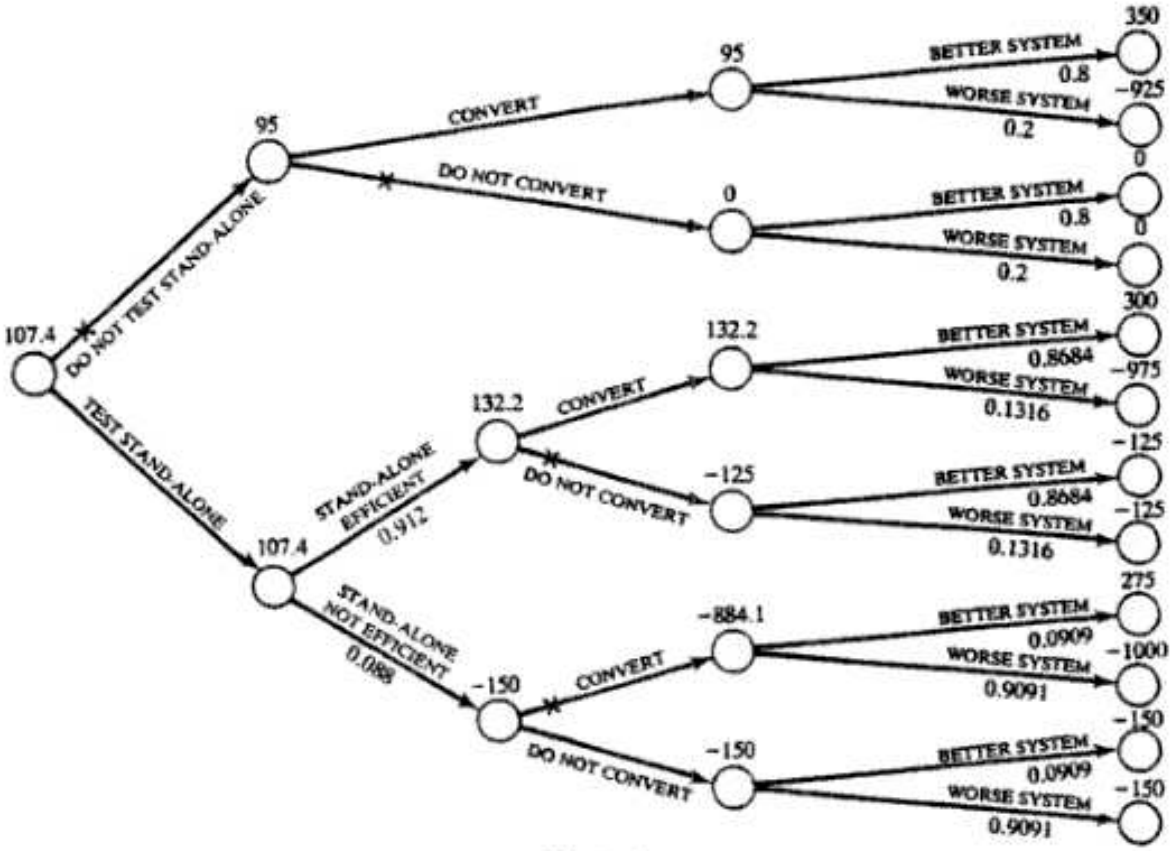

Fig. A-1

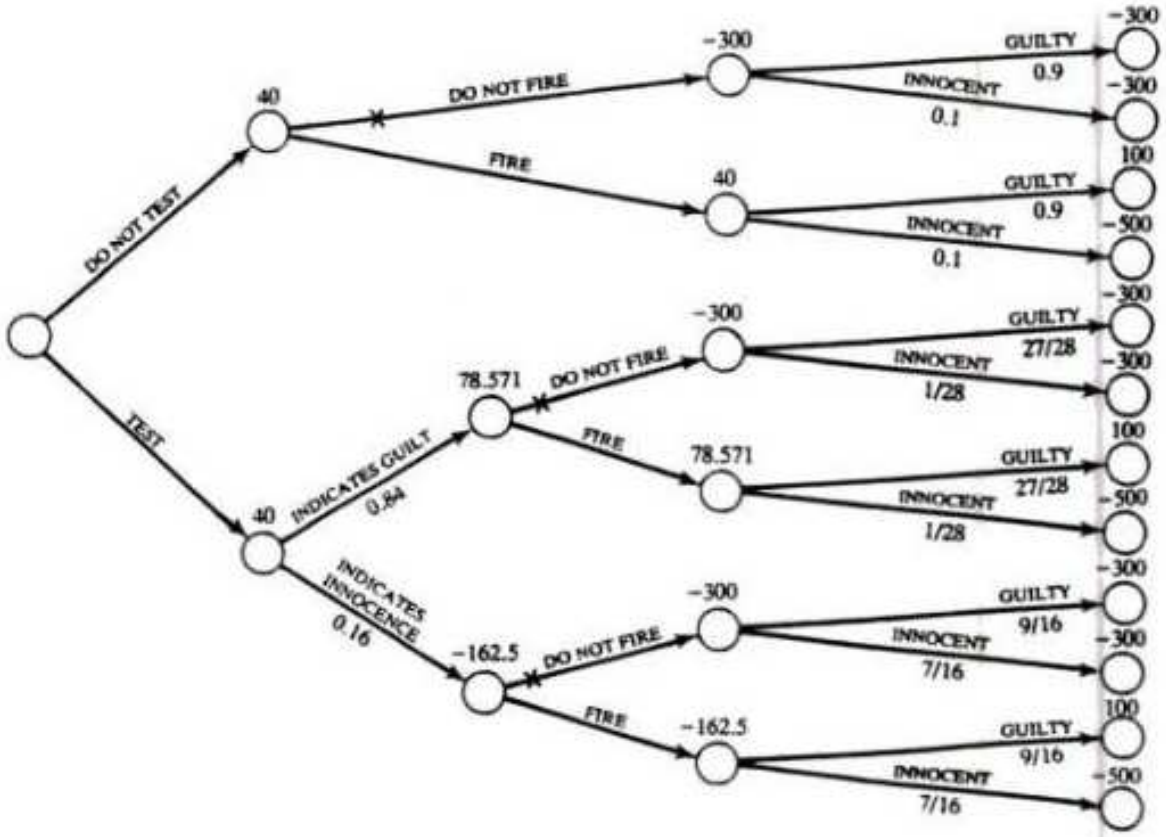

Fig. A-2

18.24 \$82 250.

18.25 The test has value zero; see Fig. A-2 (gains in thousands of dollars).

18.26 Estimate $u(-15) = 0$, $u(-14) = 0.07$, $u(-4) = 0.31$, $u(-3) = 0.32$, $u(19) = 0.42$, $u(20) = 0.425$, $u(49) = 0.87$, and $u(50) = 1$. Same answer as Problem 18.23.

18.27 $u_2 = 85$, $u_3 = 55$, $u_4 = -20$.

18.28 $C(0.34) = -\$2\,000\,000$, $R(0.34) = \$8\,460\,000$.

18.29 Risk-average on $[-15, 10)$, risk-indifferent on $(10, 31)$, risk-seeking on $(31, 50]$.

18.30 Consider the risk-averse situation. Let M_i $(i = 1, 2, \ldots, n)$ designate the dollar gain associated with the ith state of nature. S_i, for a specific decision D. Denote the utility of M_i by u_i and the probability of S_i by p_i. Since the utility function is strictly concave, its inverse, $M = f(u)$, is strictly convex. Therefore,

$$C = f(p_1u_1 + p_2u_2 + \cdots + p_nu_n) \le p_1 f(u_1) + p_2 f(u_2) + \cdots + p_n f(u_n) = E(D)$$

the expected dollar gain of the decision. Hence, $R = E(D) - C \ge 0$. The risk-seeking case is proved similarly.

18.31

	S_1	S_2	S_3
D_1	−130	−15	0
D_2	−90	−15	−45
D_3	−20	0	−110
D_4	0	−5	−125

18.32 With a regret table, choose D_2 under minimax, either D_1 or D_2 under optimistic, and D_2 under middle-of-the-road.

CHAPTER 19

19.16 $z^* = \$700$; $x_1^* = 3$ days, $x_2^* = 0$, $x_3^* = 2$ days.

19.17 $z^* = \$675$; $x_1^* = 2$ days, $x_2^* = 1$ day; $x_3^* = 2$ days; or $x_1^* = 3$ days; $x_2^* = 1$ day, $x_3^* = 1$ day.

19.18 $z^* = \$150$; $x_1^* = x_2^* = 0$, $x_3^* = 2$, $x_4^* = 1$.

19.19 $z^* = \$398$; $x_1^* = 12$, $x_2^* = 2$.

19.20 $z^* = 51$; $x_1^* = 3$, $x_2^* = 0$, $x_3^* = 2$.

19.21 $z^* = 130$; $x_1^* = 0$, $x_2^* = 1$, $x_3^* = 1$, $x_4^* = 0$, $x_5^* = 0$.

19.22 $x_1^* = 3$, $x_2^* = 1$, $x_3^* = 2$.

19.23 Using the notation of Problem 19.8, we have, for $j = 4, 3, 2, 1$,

$$m_j(u) = \max_{0 \le x \le u} \{I(x) - M(x) - R(u) + R(x) + m_{j+1}(x+1)\}$$

with $m_5 \equiv 0$ and $R(0) = 0$. Then $z^* = \$33\,600$, either by purchasing a 1-year-old machine each year or by purchasing a 1-year-old machine each year for the first 3 years and keeping the last of these machines for the fourth year.

19.24 The state variable for stage j has the values $u = 1, 2, \ldots, j$, which are the possible ages of the truck in use at the beginning of year j. Let

$I_k(u) \equiv$ anticipated income from a u-year-old machine, purchased in stage k
$R_k(u) \equiv$ cost of replacing a u-year-old machine purchased in stage k with a new model
$M_k(u) \equiv$ cost of maintaining a u-year-old machine purchased in stage k

and set $I_j(3) = -M$ (a large negative number). Then, for $j = 5, 4, 3, 2, 1$, with $m_6(u) \equiv 0$,

$$m_j(u) = \max\{I_{j-u}(u) - M_{j-u}(u) + m_{j+1}(u+1), I_j(0) - M_j(0) - R_{j-u}(u) + m_{j+1}(1)\}$$

The solution is $z^* = \$26\,000$, with $x_1^* =$ KEEP, $x_2^* =$ BUY, $x_3^* =$ KEEP, $x_4^* =$ BUY, $x_5^* =$ KEEP.

19.25 Let each job correspond to a stage, and specify the state of stage j by the triplet (a_1, a_2, a_3), where a_i $(i = 1, 2, 3)$ is 1 or 0 according as worker i is or is not available for assignment to job j. Then,

$$z^* = \min\{c_{11} + \min\{c_{22} + c_{33}, c_{32} + c_{23}\}, c_{21} + \min\{c_{12} + c_{33}, c_{32} + c_{13}\}, c_{31} + \min\{c_{12} + c_{23}, c_{22} + c_{13}\}\}$$

The Hungarian method is far preferable for larger assignment problems.

19.26 \$4 985 980; by producing 2, 3, 3, 6 computers. (Note that discounting has changed the optimal policy.)

19.27 \$30 047.62; same optimal policies as in Problem 19.23.

19.28 $m_1(8) = \$77.40$, with a 3, 2, 3 policy.

19.29 Let the state u be the number of thousand-dollar units at hand. Then $m_1(2) = \$2600$, under the optimal policy

d \ u	0	1	2	3	4	5	6
$d_1(u)$	···	···	A, B	···	···	···	···
$d_2(u)$	···	A, B	A, B	A, B	A, B	···	···
$d_3(u)$	O	B	A, B	A, B	A, B	A, B	A, B

Here, O represents the decision to make no investment.

19.30 $m_1(2) = 0.352$, for the policy

	0	1	2	3	4	5	6
$d_1(u)$	···	···	A	···	···	···	···
$d_2(u)$	···	A	A	O, A, B	A	···	···
$d_3(u)$	···	···	···	A	A	O	O

19.31 Minimize the probability of not finding oil. Then the maximum probability of finding oil is

$$1 - m_1(8) = 1 - 0.6 = 0.4$$

with all money allocated to site 1.

19.32 The state u is the number of units of work yet to be accomplished. Then, $m_1(10) = 5.0368$, with one of many optimal policies being

d \ u	0	1	2	3	4	5	6	7	8	9	10
$d_1(u)$	···	···	···	···	···	···	···	···	···	···	2
$d_2(u)$	0	1	1	1	1	1	1	2	2	3	3
$d_3(u)$	0	1	1	1	1	2	2	3	3	4	4
$d_4(u)$	0	1	1	4	4	5	5	6	···	···	···

19.33 Take as the state u the age of the current machine. Then, $m_1(1) = \$3118.83$, under a policy that always retains the current (operable) machine.

19.34 The state u is the number of computers in inventory. Then $m_1(0) = \$127\,110$, under the policy

d \ u	-5	-4	-3	-2	-1	0	1	2	3	4	5	6
$d_1(u)$	...	...	...	...	...	3	...	...	...	...	...	...
$d_2(u)$	...	4	4	4	3	3	0	0	0	...	...	...
$d_3(u)$	4	4	3	3	2	0	0	0	0	0	0	0
$d_4(u)$	4	4	3	2	1	0	0	0	0	0	0	0
$d_5(u)$	...	...	...	...	1	0	0	0	0	0	0	0

19.35 Maximum reliability of 0.351, from 3 physical units of component 1, 2 units of component 2, and 1 unit of component 3.

19.36 Subcontractors 1, 2, and 3 assigned components 2, 1, and 3, respectively.

19.37 Set

$u \equiv$ antibody units still required to make up a total of 6 (from 0 to 6, in tenths)
$m_j(u) \equiv$ minimum expected number of workdays lost beginning at stage (day) j in state u
$x \equiv$ number of pills taken in a day (from 0 to 5; *why*?)
$f(x) \equiv$ units of antibody absorbed from x pills
$p(x) \equiv$ probability of missing work the next day (which is equivalent to the expected number of days missed from work) if x pills are taken

Then, for $j = 1, 2, 3, 4$,

$$m_j(u) = \min_{x=0,\ldots,5} [p(x) + m_{j+1}(u - f(x))]$$

with $m_j(u)$ for $u < 0$ ($j = 2, 3$) and

$$m_5(u) = \begin{cases} 0 & u \le 0 \\ 10\,000 & u > 0 \end{cases}$$

19.38 Set

$u \equiv$ number of work units needed to complete project 1 (from 0 to 16, in tenths)
$v \equiv$ number of work units needed to complete project 2 (from 0 to 23, in tenths)
$m_j(u, v) \equiv$ minimum expected cost to complete both projects beginning at stage (day) j in state (u, v)
$f_i(z) \equiv$ number of work units completed by z crews on project i ($i = 1, 2$)
$x_i \equiv$ number of contractor's own crews assigned to project i ($i = 1, 2$)
$y_i \equiv$ number of subcontracted crews assigned to project i ($i = 1, 2$)

Then, for $j = 1, \ldots, 5$,

$$m_j(u, v) = (0.9)(5000) + (0.1)(4000) + \min [1500(y_1 + y_2) + m_{j+1}(u - g_1(x_1, y_1), v - g_2(x_2, y_2))]$$

where

$$g_1(x_1, y_1) = \begin{cases} f_1(x_1 + y_1) & x_1 = 0, 1, 2, 3, 4 \\ 0.9f_1(5 + y_1) + 0.1f_1(4 + y_1) & x_1 = 5 \end{cases}$$

$$g_2(x_2, y_2) = \begin{cases} f_2(y_2) & x_2 = 0 \\ 0.9f_2(x_2 + y_2) + 0.1f_2(x_2 + y_2 - 1) & x_2 = 1, 2, 3, 4, 5 \end{cases}$$

and the minimum is taken over all nonnegative integral values of x_1, x_2, y_1, y_2 such that

$$x_1 + x_2 = 5 \qquad x_1 + y_1 \le 6 \qquad x_2 + y_2 \le 6$$

The end condition is

$$m_6(u, v) \equiv \begin{cases} 0 & u \le 0 \text{ and } v \le 0 \\ 1\,000\,000 & u > 0 \text{ or } v > 0 \end{cases}$$

19.39 Set

$u \equiv$ number of money units remaining for allocation

$v \equiv$ number of votes already won

$m_j(u, v) \equiv$ maximum probability of gaining at least 100 votes starting at stage (primary) j in state (u, v)

$V_j \equiv$ number of votes at stake in stage j

$p_j(x) \equiv$ probability of winning V_j if x money units are spent in stage j

Then

$$m_j(u, v) = \underset{0 \le x \le \min\{u, 7\}}{\text{maximum}} \{p_j(x)m_{j+1}(u - x, v + V_j) + [1 - p_j(x)]m_{j+1}(u - x, v)\}$$

for $j = 1, \ldots, 5$, with

$$m_6(u, v) \equiv \begin{cases} 0 & v < 100 \\ 1 & v \ge 100 \end{cases}$$

The possible values for v are 0 for stage 1; 0 and 89 for stage 2; 0, 69, 89, and 158 for stage 3; and so on.

CHAPTER 20

20.15 Stochastic, not regular, egodic; $\mathbf{L} = \begin{bmatrix} 1 & 0 \\ 1 & 0 \end{bmatrix}$.

20.16 Not stochastic.

20.17 Not stochastic.

20.18 Stochastic, not regular, not ergodic.

20.19 Stochastic, not regular, ergodic;

$$\mathbf{L} = \begin{bmatrix} 1 & 0 & 0 & 0 \\ 0 & 3/8 & 0 & 5/8 \\ 0 & 0 & 1 & 0 \\ 0 & 3/8 & 0 & 5/8 \end{bmatrix}$$

20.20 Stochastic, regular, ergodic;

$$\mathbf{L} = \frac{1}{45}\begin{bmatrix} 19 & 17 & 9 \\ 19 & 17 & 9 \\ 19 & 17 & 9 \end{bmatrix}$$

20.21 Stochastic, not regular, ergodic;

$$\mathbf{L} = \begin{bmatrix} 1 & 0 & 0 \\ 1 & 0 & 0 \\ 1 & 0 & 0 \end{bmatrix}$$

20.22 3/11.

20.23 (*a*) 0.7625, (*b*) 0.8.

20.24 4/13, or approximately 31 percent of the time.

20.25 0.2, 0.14, 0.154, 0.151, and 0.15162.

20.26 (*a*) Approximately 34 discharged, 31 ambulatory, 18 bedridden, and 17 dead. (*b*) Approximately 65 discharged and 35 dead.

20.27 7/12 in good condition, 5/12 in average condition.

20.28 (*a*) 1, (*b*) none, (*c*) 1 and 3, (*d*) 1.

20.29 Designate one of the absorbing states as state 1. Then $\mathbf{P}$ has a 1 in the (1, 1)-position and zeros in the rest of the first row. Any power of $\mathbf{P}$ will have this same first row.

20.32 Because $\lambda = 1$ is an eigenvalue of $\mathbf{P}^T$, it is also an eigenvalue of $\mathbf{P}$ (the two matrices have the same characteristic equation).

20.33 First prove, by induction, that eigenvectors belonging to distinct eigenvalues of $\mathbf{P}$ are linearly independent. Then construct $\mathbf{M}$ out of N linearly independent eigenvectors.

20.34 See Problem 20.15.

CHAPTER 21

21.10 0.5204, 8.166, 81.66.

21.11 0.9272, 66.69, 666.9.

21.12 0.0621, 3.1, 12.1.

21.13 20.25.

21.14 132 805 cars.

21.15 7 days.

21.16 0.029.

21.17 0.5064, 2.48.

21.18 0.9000, 1.23.

21.19 0.0341, 4.30.

21.20 $\mu = (2/3)\ \text{min}^{-1}$; $1 - p_0(12) = 0.4530$.

21.21 0.1034.

21.22 0.1815.

21.23 $\lambda = 1/4$, $\mu = 2/7$, 48.95 members.

21.25 (*a*) n/λ, (*b*) yes.

21.26 $\lambda_1 \Delta t + \lambda_2 \Delta t = (\lambda_1 + \lambda_2)\Delta t$.

CHAPTER 22

22.6 (*a*) individuals seeking food; (*b*) food dispensers and cashier; (*c*) single queue, multiple servers in series. FIFO, infinite capacity if waiting is allowed outside the cafeteria.

22.7 (*a*) individuals seeking barber service; (*b*) barbers; (*c*) two servers, FIFO, finite capacity of seven.

22.8 (*a*) individuals seeking gasoline; (*b*) customers at the pumps; (*c*) three servers, FIFO, finite capacity if no waiting is permitted outside the station.

22.9 (*a*) airplanes waiting to land; (*b*) runways; (*c*) generally one server, priority to planes requiring emergency landings (otherwise FIFO), infinite capacity.

22.10 (*a*) automobiles; (*b*) toll collectors; (*c*) as many servers as collectors, FIFO, infinite capacity.

22.11 (*a*) jobs to be typed; (*b*) typists; (*c*) as many servers as typists, queue discipline may be FIFO or PRI (with priority given to jobs submitted by top management or with rush designations), infinite capacity.

22.12 (*a*) troops; (*b*) individual spaces on troop carriers; (*c*) as many servers as there are spaces. PRI by rank, infinite capacity.

22.13 (*a*) cases; (*b*) judge; (*c*) single server, usually FIFO, infinite capacity.

22.14 (*a*) 9:30, 10:18; (*b*) 1.033; (*c*) 2.533.

22.15 (*a*) 4, (*b*) 16 (not including the three jobs that arrive at the moment the shift ends).

22.16 20 min.

22.17 Five (not including the customer denied entrance at the 60-min mark).

CHAPTER 23

23.14 (*a*) 2.25, (*b*) 4.5 min, (*c*) 0.062, (*d*) 0.25.

23.15 (*a*) 2, (*b*) 1.33, (*c*) 1 h, (*d*) 0.368.

23.16 (*a*) 2.25, (*b*) 2.25 min, (*c*) 3 min, (*d*) 0.178.

23.17 (*a*) 0.9, (*b*) 1.5, (*c*) 0.7364, (*d*) 0.07776.

23.18 (*a*) 0.528, (b) 0.2, (c) 0.632.

23.19 \$16.80.

23.20 Yes, with expected daily savings of \$105.

23.21 110 ft^2.

23.22 None on L or L_q; W is reduced by 1/2.

23.23 $\rho^{n-2}(1-\rho)$.

23.24 $(1-\rho)^{-1}$.

23.26 The expected rate of transitions into state n is $\lambda p_{n-1} + \mu p_{n+1}$ (or μp_1, if $n = 0$); the expected rate of transitions out of state n is $\lambda p_n + \mu p_n$ (or λp_0, if $n = 0$). Equating these and dividing through by μ gives (*1*) and (*2*) of Problem 23.7.

23.27
$$F(z) = \frac{p_0}{1-\rho z}$$

23.28 By Theorem 21.1, the departure stream is a Poisson process *while the server is busy*. This is the case a fraction ρ of the time; hence, the expected number of departures in a unit time interval is
$$\rho\mu + (1-\rho)(0) = \lambda$$

CHAPTER 24

24.11 (*a*) 1/3, (*b*) 16/45.

24.12 (*a*) 23.5 s, (*b*) 0.1420, (*c*) 3.987.

24.13 With the new system, each teller's idle time drops from 66.67 to 60 percent and L decreases from $2(\frac{1}{2}) = 1$ to 0.9524.

24.14 (*a*) 0.025, (*b*) 0.3, (*c*) 0.675.

24.15 (*a*) 2.5, (*b*) 8 min, (*c*) \$25 per hour.

24.16 (*a*) 13 h 4 min, (*b*) \$495.48 per day.

24.17 No. New cost would be \$213.33 from returning unserviced buses, plus \$300 for new crew.

24.18 (*a*) 53 percent, (*b*) 1.32 per day.

24.19 (*a*) 2.90, (*b*) 46.4 s, (*c*) 50.4 h^{-1}.

24.20 (*a*) 2.089, (*b*) 6 min 48 s.

24.21 (*a*) 2.77, (*b*) 2.94 min.

24.22
$$p_0 = \frac{1-0.8\rho}{1+0.2\rho} \quad \text{and} \quad p_n = (0.8)^{n-1}\rho^n p_0 \qquad (n = 1, 2, \ldots)$$

24.23 (*a*) 1.53, (*b*) 4.72 min.

24.24 (*a*) 1.51, (*b*) 3 min 14 s, (*c*) \$3.72 per hour.

24.25 According to (*24.1*), the criterion for a steady state (see Problem 23.26) is satisfied if merely steps *up* into state n and steps *down* from state n occur at the same expected rate.

24.30 $p_0 = 0.0450$, $p_1 = 0.1350$, $p_2 = p_3 = 0.2024$, $p_4 = 0.1518$, $p_5 = 0.1139$, $p_6 = 0.0854$, $p_7 = 0.0641$.

24.31 $L = \rho$, $W = L/\lambda = 1/\mu$, $W_q = 0$, $L_q = 0$.

24.32 (*a*) 350, (*b*) 0.368.

24.33

$$p_0 = \left[\frac{s^s\rho^{s+1}}{s!}\sum_{n=s+1}^{N_0}\frac{N_0!}{(N_0-n)!}\rho^{n-(s+1)} + \sum_{n=0}^{s}\binom{N_0}{n}(s\rho)^n\right]^{-1}$$

$$p_n = \begin{cases} \dbinom{N_0}{n}(s\rho)^n p_0 & (n = 1, \ldots, s) \\ \dfrac{N_0!}{(N_0-n)!}\dfrac{s^s\rho^n}{s!}p_0 & (n = s+1, s+2, \ldots, N_0) \end{cases}$$

As $N_0 \to \infty$, these expressions go over into (*24.5*) and (*24.6*), provided $\rho < 1$.

24.35 (*a*) 5.87, (*b*) 16 percent.

24.36 Let S_n be the number of customers in service when the state is n ($n = 1, 2, \ldots$).

$$\frac{1}{\bar{\mu}} = W - W_q = \frac{1}{\bar{\lambda}}(L - L_q) = \frac{1}{\bar{\lambda}}\left[\sum_{n=1}^{\infty} np_n - \sum_{n=1}^{\infty}(n - S_n)p_n\right]$$

$$= \frac{1}{\bar{\lambda}}\sum_{n=1}^{\infty} S_n p_n = \frac{1}{\bar{\lambda}}(1 - p_0)\sum_{n=1}^{\infty} S_n \frac{p_n}{1 - p_0} = \frac{1}{\bar{\lambda}}(1 - p_0)\hat{S}$$

Index

Absolute optimum, 169
Absorbing state, 378
Activity, 231
  dummy, 231
Annual demand, 259
A posteriori criterion, 326
A priori criterion, 326
Arc of network, 216
Arrival pattern, 391
Arrival rate, 380
  for an M/M/1 system, 398
Arrow diagram, 231
Artificial variable, 19, 33
Assignment problem, 155
Average arrival rate, M/M/1 system, 398
Average inventory level, 260
Average service rate, M/M/1 system, 398

Balance equations, M/M/1 system, 403
Balking, 391
  function, 408
Basic feasible solution, 22
Basic variable, 22
Bayes' criterion, 326
Bayes' theorem, 326, 330
Big *M* method, 40
Birth in a growth process, 379
  in a queueing system, 391
Birth rate, 380
Bounding, 125
Branch and bound algorithm, 124
Branch of network, 216
Branching, 124

Capacity, of branch, 218
  of queueing system, 391
Carrying cost, 259
Certainty equivalent, 338
Cheapest-path problems, 217
Coefficient of correlation, 281
Coefficient of determination, 281
Complementary slackness principle, 56, 69
Concave function, 171, 185
Connected branches, 216
  network, 216
Constraint, 1
Constraint qualification, 200
Convex combination, 20
  function, 171, 185
  set, 21
CPM, 231, 233
Crash cost, 238
  time, 238
Critical activity, 233, 235
  path, 233, 237
Critical point (*see* Stationary point)
Cut, 229
Cut algorithms, 133

D (queueing notation), 393
Dantzig cut algorithm, 138
DDLT, 261
Death, in a growth process, 379
  in a queueing system, 391
Death rate, 380
Decision, 342
Decision theory, 325
  tree, 326
Degenerate solution, 22, 142
Demand during lead time, 261
Demand rate, 260
Destinations, 140
Deterministic multistage processes, 342
Directional derivative, 189
Discount factor, 344
Discounted value (*see* Present value)
Distribution vector, 370
Dominance, 315
Dual simplex method, 34
Duality, 56
Duality theorem, 56
Dummy (*see* Fictitious destination or source)
Dynamic programming, deterministic, 342
  with discounting, 344
  stochastic, 344

E_k (queueing notation), 393
Economic order quantity, 259
EDDLT, 261
EOQ, 259
  for production, 259, 260
  for purchasing, 259
  for quantity discounts, 259, 260
Equivalence probability, 327

Copyrighted Material

Ergodic matrix, 370
Erlang distribution, 393 (*See also* Gamma distribution)
Euler's constant, 389
Event, 231
Expected demand during lead time, 261
Exploratory moves, 184
Exponential distribution, 382
Exponential models, 282
Exponential smoothing, 283
  with trend, 283
Extreme point, 21

Fair game, 324
Feasible directions, method of, 200
Feasible region, 3
Fibonacci search, 171, 180
  sequence, 171, 181
Fictitious destination or source, 140
FIFO queue discipline, 393
Finite-capacity queue, 393, 409
Finite decision processes, 342
Finite-source queueing systems, 420
First approximation to an integer program, 124
Fixed order period models, 262
Fixed order quantity models, 259
Fixed point, 369
Fletcher-Powell, method of, 184
Float, free, 233, 236, 239
  total, 233, 236
Forecast accuracy, 283
Forecasting, 281
Forecasting time series with multiplicative model, 284

G (queueing notation), 393
Gain matrix, 325
Game, 312
  fair, 324
  stable, 313
  unstable, 314
Gamma distribution, 404
Global optimum, 169, 182
Golden-mean search, 171
Gomory cut algorithm, 137
Gradient vector, 182

Hessian matrix, 182
Hidden conditions, 2
Hooke-Jeeves' pattern search, 184
  modified, 185
Hungarian method, 156

Infinite-capacity queue, 393
Integer program, 2
  solution of, 124, 133, 140, 155
Interarrival time, 382
  for an M/M/1 system, 398
  for a queueing system, 391

Inventory, 259
Inventory shortage, 262

Jacobian matrix, 199
Junction, 155, 218

Karmarkar's algorithm, 88
Karmarkar's special form, 89
Kendall's notation, 393
Knapsack problem, 129
Kolmogorov equations, 380
Kuhn-Tucker conditions, 200

L (number in queueing system), 398
L_q (queue length), 398
Lagrange multiplier, 199
Lead time, 262, 263
Least-squares exponential curve, 197
LIFO queue discipline, 393
Limiting state distribution, 370
Line segment, 21
Linear combination, 25
Linear dependence, 20
Linear independence, 20
Linear Markovian growth process, 380, 381
Linear program, 1 (*See also* Simplex method)
  basic feasible solution of, 22
  duality, 56
  initial solution of, 19
  for matrix games, 314
  standard form of, 20
Link, 216
Little's formulas, 399, 407
Local optimum, 169, 182
Logarithmic models, 282
Loop, 142
Lottery, 327

M (queueing notation), 393
MAD, 283
Markov chain, 369
  absorbing state of, 378
Markov process, 369
  birth-death, 379
Mathematical programming, 1
Matrix game, 312
Max-flow, min-cut theorem, 230
Maximal flow problems, 218
Maximin strategy, 313
Maximum inventory, 260
Mean absolute deviation, 283
Mean squared error, 283
Measures of effectiveness, 398
  for an M/M/1 system, 399
Memoryless property, 400
Middle-of-the-road criterion, 326
Minimax criterion, 313, 326
  strategy, 313
  theorem, 314

Minimum-span problems, 217
Mixed strategy, 313
M/M/1 system, 398
M/M/1/K system, 409
M/M/∞ system, 420
M/M/s system, 408
M/M/s/K system, 409
Most likely time estimate, 237
Move of a game, 312, 316
Moving averages, 282
MSE, 283
Multiple regression, 282
Multistage decision process, 342
  stochastic, 344

Naive decision criteria, 326
"Near-optimal" algorithms, 157
Nearest-neighbor method, 163
Negative (semi-)definite matrix, 183
Network, 216
Network diagram, 231
Newton-Raphson method, 184, 199
Node, 216
Nondegenerate solution, 22
Nonlinear program, 1
  multivariable, constrained, 198
  multivariable, unconstrained, 182
  single-variable, 169
Nonnegativity condition, 18
Normal cost, 238
  time, 238
Normalized utility, 327
Northwest corner rule, 141

Objective, 1
$o(\Delta t)$, 379
OP, 261
Optimistic decision criterion, 326
Optimistic time estimate, 237
Optimization problems, 1
Order point, 261
Ordering cost, 259
Oriented branch, 216
Overstock cost, 263

Path, 216
Pattern search, 184
Payoff matrix, 312
Penalty cost, 19
  function, 199
  weight, 200
Permutations, 155
PERT, 231, 237
Pessimistic decision criterion, 326
Pessimistic time estimate, 237
Pivot element, 33
Poisson distribution, 382
Poisson growth process, 381, 382
Policy, 342
Policy table, 345
Population, 379
Positive definite matrix, 191
Present value, 344
Primal, 56
Principle of optimality (Bellman's), 343
Probability generating function, 386
Production problems, 155
Production rate, 260
Project cost, 238
  planning, 231
  time, 238
Pure birth process, 379
  linear, 380
  Poisson, 381
Pure death process, 379
  linear, 380
  Poisson, 382
Pure strategy, 312
  dominated, 315

Quadratic program, 2
Quantity ordered, 259
Queue discipline, 393
Queueing systems, 391
  finite-source, 420
  M/M/1, 398
  M/M/1/K, 409
  M/M/∞, 420
  M/M/s, 408
  M/M/s/K, 409

Regression methods, 281
Regret matrix, 341
Regular matrix, 370
Reneging, 391
  function, 408
Revised simplex method, 87
Risk-averse, 341
  -indifferent, 341
  -seeking, 341
Risk premium, 338
Rolle's theorem, 174
Rosenbrock function, 197

Safety stock, 261
Scheduling models, 155
Sensitivity analysis, 57
Sequential-search techniques, 170
Service pattern, 391
Service time, 391
  for an M/M/1 system, 398
Setup cost, 260
Shadow costs, 56
Shortest-route problems, 217
Simple linear regression, 281

Simplex method, 33
  tableau, 32
Single period models, 263
Sink, 217
SIRO queue discipline, 393
Slack, 233, 236
Slack variable, 18
Smoothing constant, 283
Smoothing methods, 282
Source, in network, 217
  in transportation problem, 140
SS, 261
SSE, 283
Stable game, 313
Stage, 342
Standard error of estimate, 282
Standard form, of a constrained nonlinear program, 198
  of a linear program, 20
  of a transportation problem, 140
State, of a decision process, 342
  of a growth process, 379
  of a Markov process, 369
  of nature, 325
  of a queueing system, 391
State-dependent queueing systems, 407
State-transition diagram, 374
Stationarity point, 170, 183
Steady-state probabilities, 398, 407
  for an M/M/1 system, 398
  for an M/M/1/K system, 409
  for an M/M/s system, 408
  for an M/M/s/K system, 409
Steepest ascent, method of, 184
Stochastic matrix, 369
Strategies, 312
  dominated, 315
  mixed, 313, 314
  pure, 312
Strictly convex (concave) function, 172, 185
Sum of squared errors, 283
Surplus variable, 18
Symmetric dual, 56
Symmetric game, 324
System capacity, 393

TC, 259
Three-point interval search, 171
Time series linear regression, 281
Total annual inventory cost, 259
Traffic intensity, 398
Transition matrix, 369
Transportation algorithm, 140
Transportation problem, 140
Transshipment problems, 155
Traveling salesperson problem, 156, 157
  first approximation for, 157
Tree, 216
  for a decision process, 326, 340
  for an integer program, 126
Trend-adjusted exponential smoothing, 283
Two-person game, 312
Two-phase method, 33

Unconstrained mathematical programs, 1, 182
Understock cost, 263
Unimodal function, 170
Unstable game, 314
Unsymmetric dual, 57
Utility, 326
  normalized, 327
  von Neumann, 327
Utilization factor, 398

Value, of a game, 314
  of a test, 340
Vogel's method, 141
Von Neumann utilities, 327

W (time in queueing system), 399
W_q (waiting time), 399
Weierstrass theorem, 28, 170
Weighted moving averages, 282
Work column, 33
$W(t)$ (probability distribution function), 399
$W_q(t)$ (probability distribution function), 399

Zero-sum game, 312

Copyrighted Material

This solved-problem study guide helps you ace operations research courses! Completely worked problems show you each and every step to hundreds of solutions!

SCHAUM'S outlines

OVER 30 MILLION SOLD

Tackling the broad range of allocation problems that actually confront engineers, programmers, and analysts in today's business and industrial worlds—exactly the kind of problems that appear on operations research exams—this complete study guide gives you step-by-step guidance in all the mathematical programming techniques—including the trailblazing Karmarkar algorithm—you need to excel in any operations research course.

Using illustrative word problems that reflect typical, real-world situations, this study guide eases you through the variety of mathematical choices and applications used in operations research. Clear, logical explanations and one-step-at-a-time procedures show you how to analyze and solve each type of problem. Step by step, and working at your own pace, you learn to choose and apply the appropriate method.

So comprehensive that it can be used as a complete independent study course, this guide is also the perfect complement and reinforcement to any text. Hundreds of supplementary problems give you a chance to practice newly learned techniques.

Professionals working in the field will also find this comprehensive study guide useful as a hands-on solutions manual that quickly supplies the variety of techniques needed every day on the job!

Chapters include: Mathematical Programming • Linear Programming: Basic Concepts • Linear Programming: The Simplex and the Dual Simplex Methods • Linear Programming: Duality and Sensitivity Analysis • Linear Programming: Extensions, Including the Revised Simplex Method and Karmarkar's Algorithm • Integer Programming: Branch-and-Bound Algorithm • Integer Programming: Cut Algorithms • Integer Programming: The Transportation Algorithm • Integer Programming: Scheduling Models • Nonlinear Programming: Single-Variable Optimization • Nonlinear Programming: Multivariable Optimization Without Constraints • Nonlinear Programming: Multivariable Optimization With Constraints • Network Analysis • Project Planning Using PERT/CPM • Inventory Models • Forecasting • Game Theory • Decision Theory • Dynamic Programming—Deterministic and Stochastic • Finite Markov Chains • Markovian Birth-Death Processes • Queuing Systems • M/M/1 Systems • Other Systems with Poisson-Type Input and Exponential-Type Service Times

McGraw-Hill
A Division of The McGraw-Hill Companies

$15.95 U.S.A.

ISBN 0-07-008020-8

Related Titles in Schaum's Outlines

Engineering

- Acoustics
- Continuum Mechanics
- Descriptive Geometry
- Engineering Economics
- ● *Engineering Mechanics, 5th Ed.*
- Finite Element Analysis
- Fluid Dynamics, 2nd Ed.
- ● *Fluid Mechanics and Hydraulics, 3rd Ed.*
- Heat Transfer
- Lagrangian Dynamics
- Machine Design
- ● *Mechanical Vibrations*
- Reinforced Concrete Design, 3rd Ed.
- Statics and Mechanics of Materials
- Strength of Materials, 3rd Ed.
- Structural Analysis
- Structural Steel Design (LRFD Method)
- Theoretical Mechanics
- ● *Thermodynamics for Engineers*
- Thermodynamics with Chemical Applications, 2nd Ed.

A bullet (●) next to a title indicates that a Schaum's Electronic Tutor is also available.

Copyrighted Material