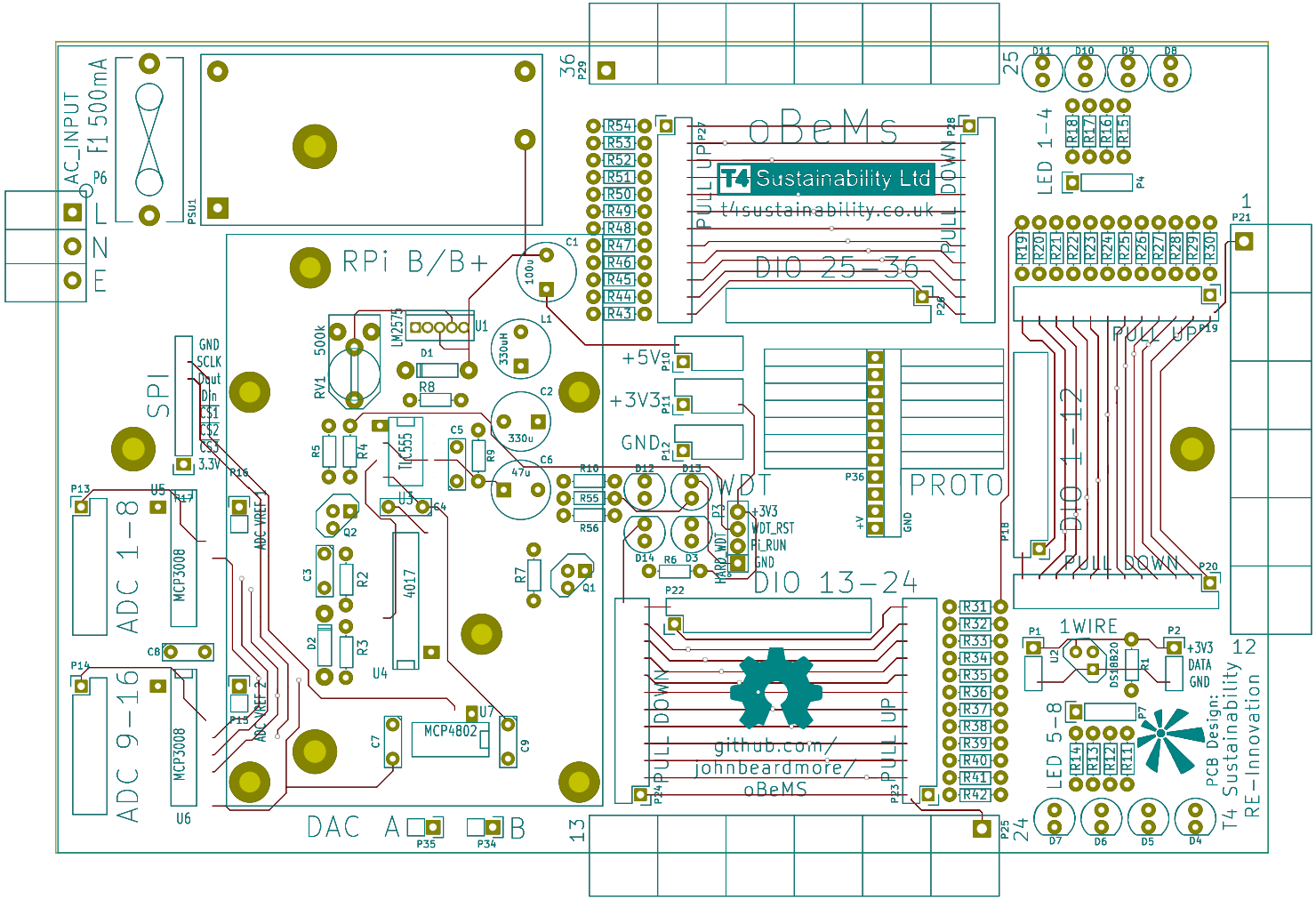

Sheet: File: oBeMs_Pulse_PCB.kicad_pcb		
Title:		
Size: A4	Date:	Rev:
KiCad E.D.A. kicad (2015-07-09 BZR 5913, Git 33e1797)-product		Id: 1/1