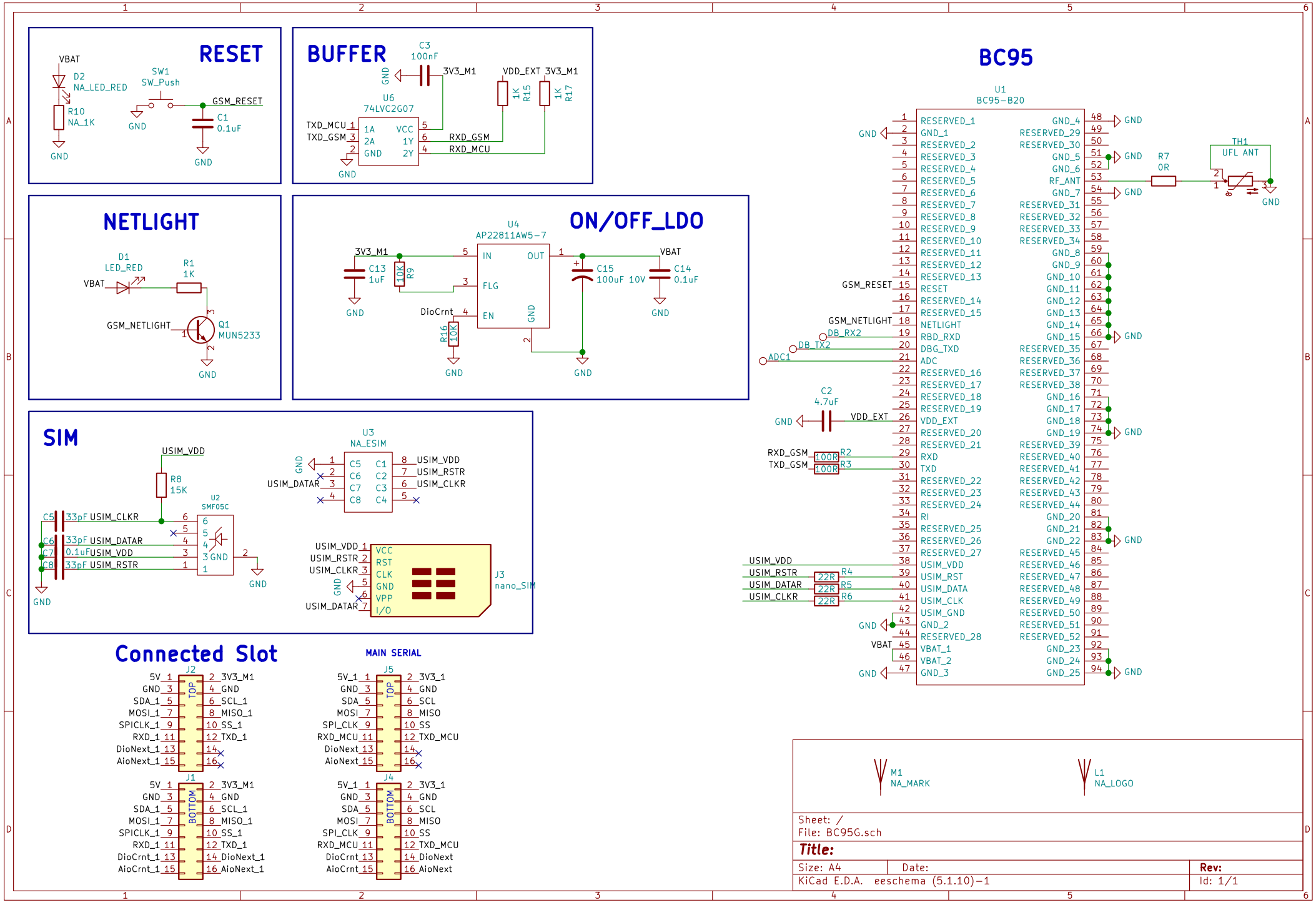
RESET
VBAT
D2
NA_LED_RED
R10
NA_1K
GND
SW1
SW_Push
GND
GSM_RESET
C1
0.1uF
GND
BUFFER
C3
100nF
GND
3V3_M1
VDD_EXT 3V3_M1
1K
R15
1K
R17
U6
74LVC2G07
TXD_MCU 1
TXD_GSM 3
1A
2A
GND
VCC
1Y
2Y
5
6
4
2
RXD_GSM
RXD_MCU
GND
BC95
U1
BC95-B20
GND
GND
GND