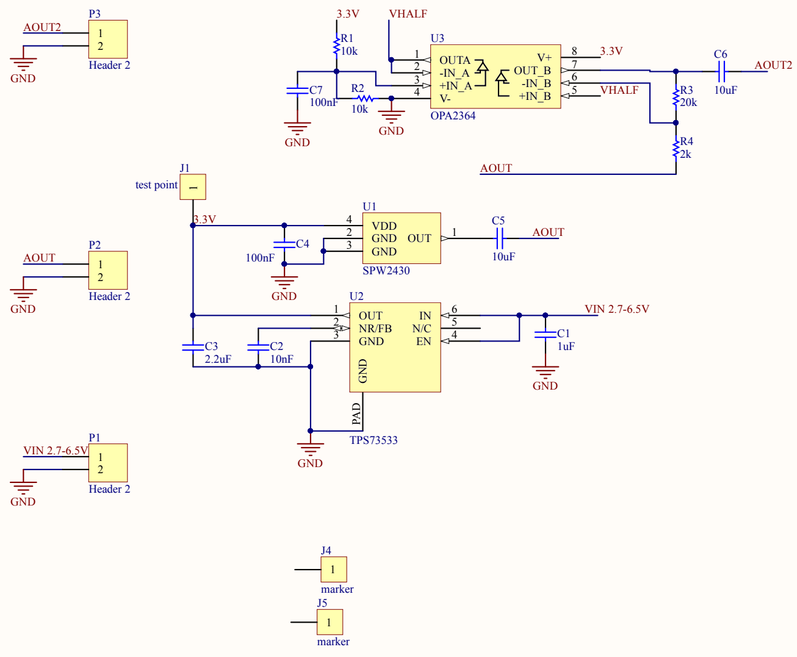

Title	SPW2430 Horizontal Mount Board, Tony Terrasa and David Ramsay	
Size A	Number	Revision 1.2
Date: 3/4/2019		Sheet of
File: Y:\mill_pcbs\..\mount_board.SchDoc		Drawn By:

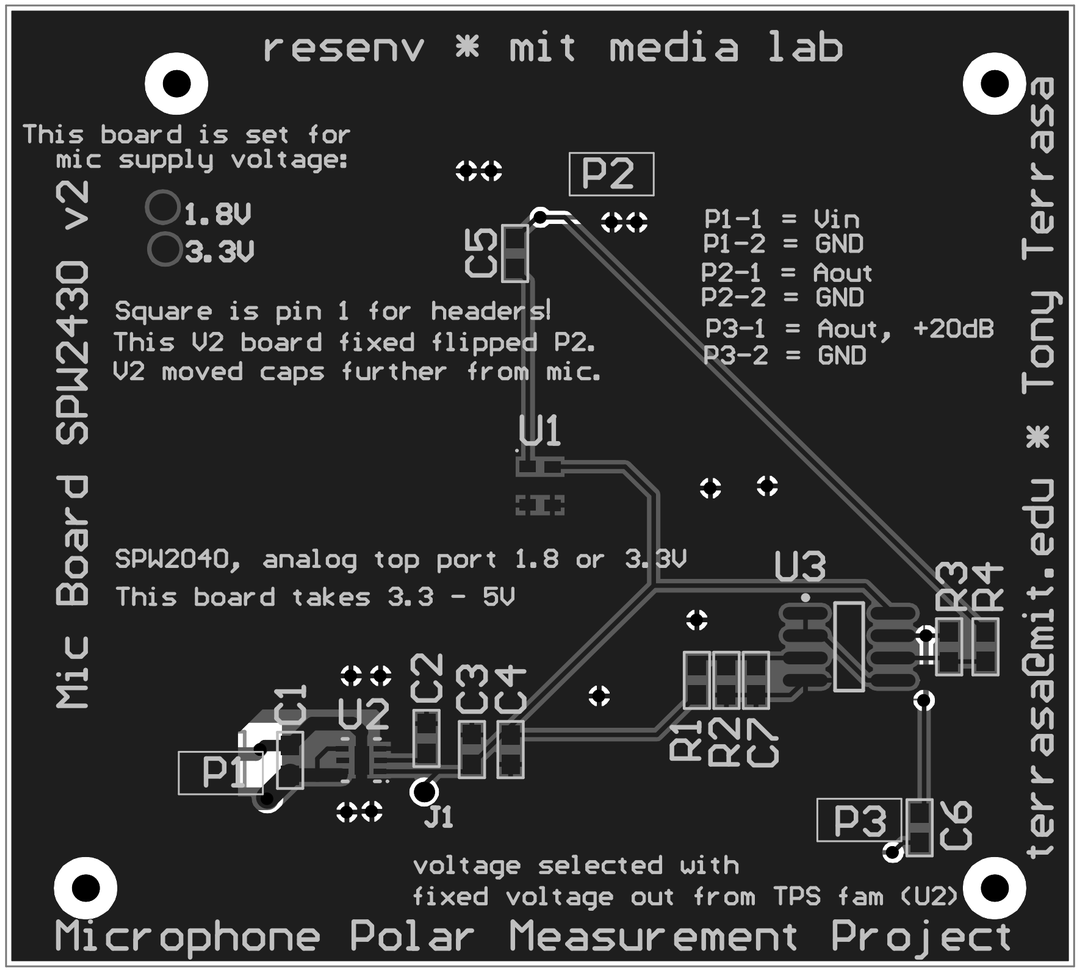
resenv * mit media lab
This board is set for
mic supply voltage:
1.8V
3.3V
Square is pin 1 for headers!
This V2 board fixed flipped P2.
V2 moved caps further from mic.
P2
P1-1 = Vin
P1-2 = GND
P2-1 = Aout
P2-2 = GND
P3-1 = Aout, +20dB
P3-2 = GND
C5
U1
SPW2040, analog top port 1.8 or 3.3V
This board takes 3.3 - 5V
U3
R3
R4
C1
U2
C2
C3
C4
P1
J1
R1
R2
C7
P3
C6
voltage selected with
fixed voltage out from TPS fam (U2)
Mic Board SPW2430 v2
terrasa@mit.edu * Tony Terrasa
Microphone Polar Measurement Project