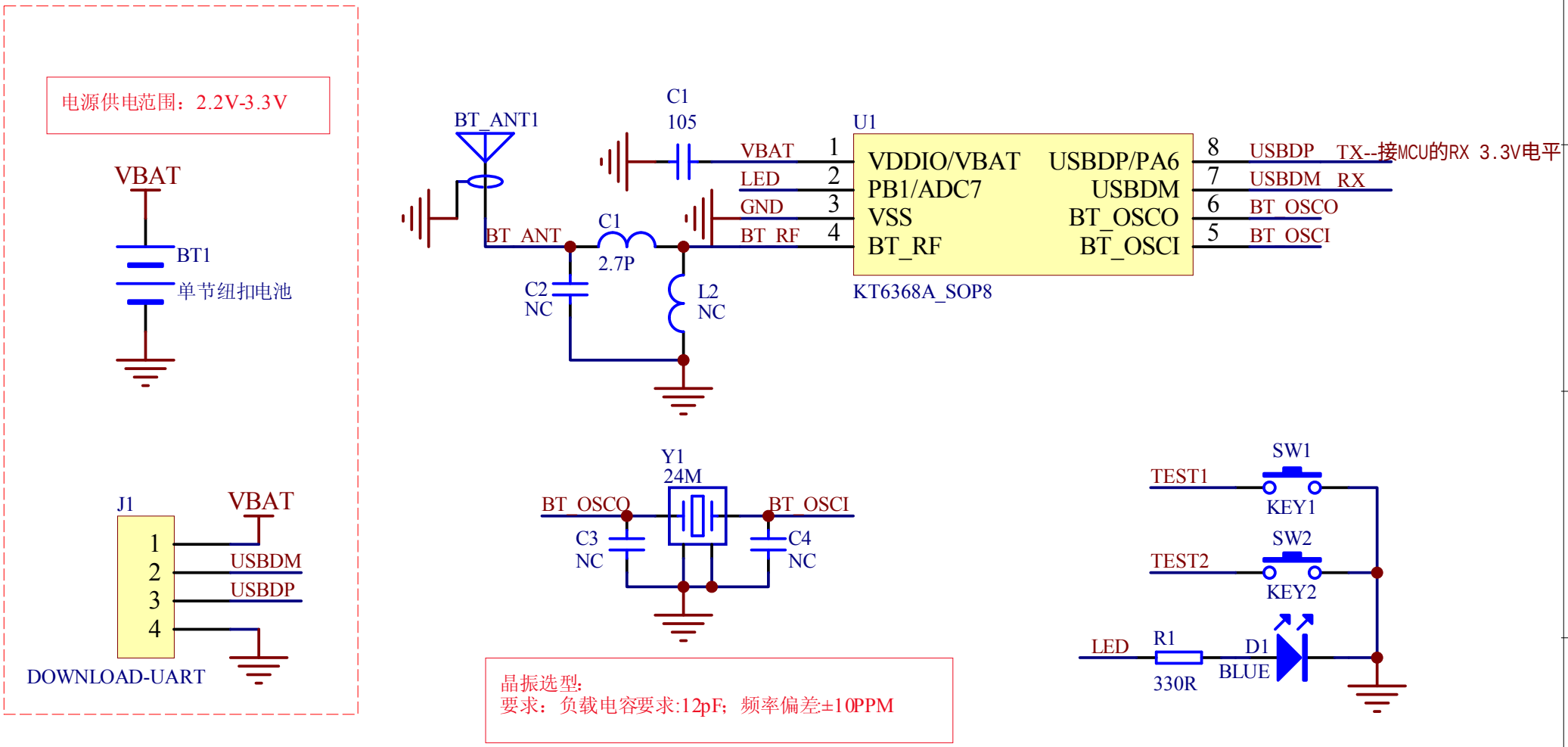
电源供电范围：2.2V-3.3V
VBAT
BT1
单节纽扣电池
J1
VBAT
1
2
3
4
USBDM
USBDP
DOWNLOAD-UART
BT_ANT1
C1
105
U1
VBAT
LED
GND
BT_RF
VDDIO/VBAT
PB1/ADC7
VSS
BT_RF
USBDP/PA6
USBDM
BT_OSCO
BT_OSCI
USBDP
USBDM
BT_OSCO
BT_OSCI
TX--接MCU的RX 3.3V电平
RX
KT6368A_SOP8
BT_ANT
C1
2.7P
C2
NC
L2
NC
Y1
24M
BT_OSCO
BT_OSCI
C3
NC
C4
NC
晶振选型:
要求：负载电容要求:12pF；频率偏差±10PPM
SW1
TEST1
KEY1
SW2
TEST2
KEY2
LED
R1
330R
D1
BLUE