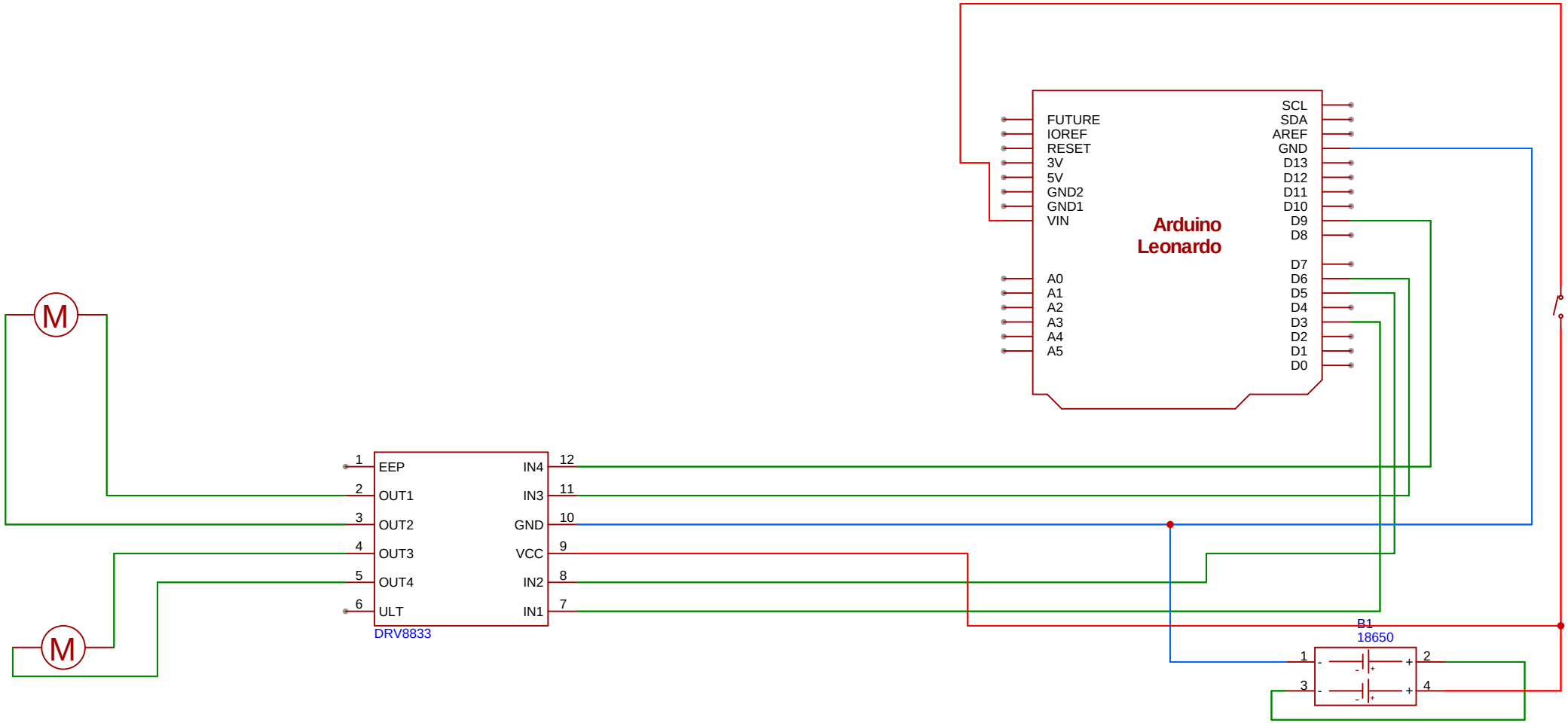

Schematic	Schematic1_1	Create at	2025-08-31
		Update at	2025-08-31
Board		Page	P1
Drawn	Torrin De Wree	Line follower	
Reviewed			
		Version	Size	Page 1 Total 1
EasyEDA		V1.0	A4	EasyEDA.com