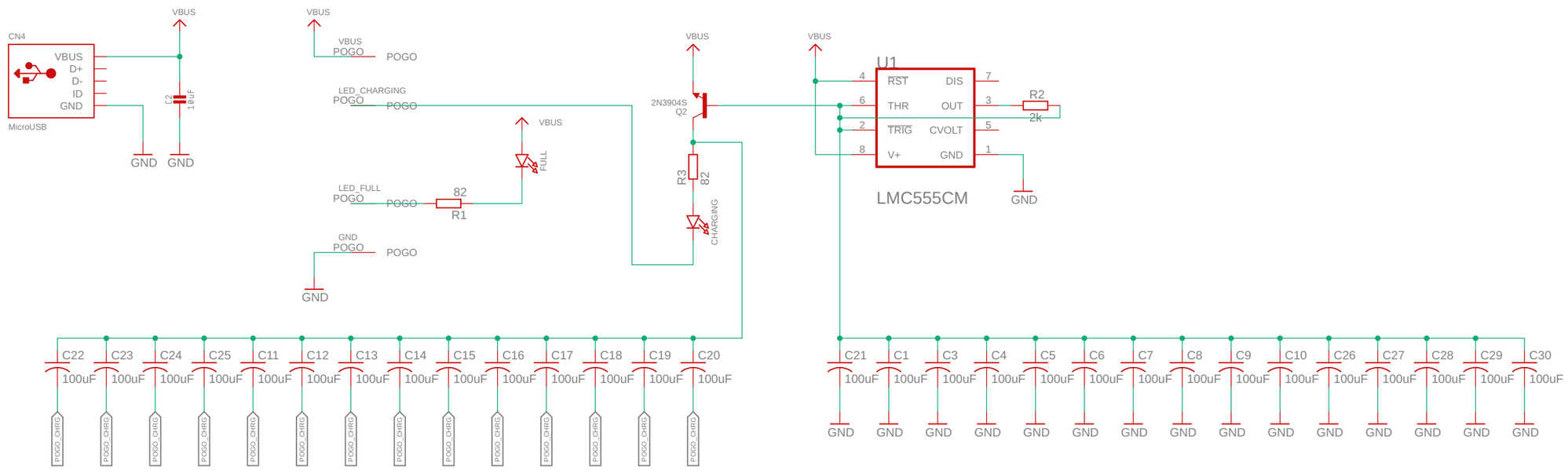

Connects to the remote with pogo pins.
Besides providing power to the remote it
also gets 2 signals from the charger IC.

A white LED will "breathe" while the remote is charging.
When it's done a white LED will light up.

CHARGING DOCK

Sheet: