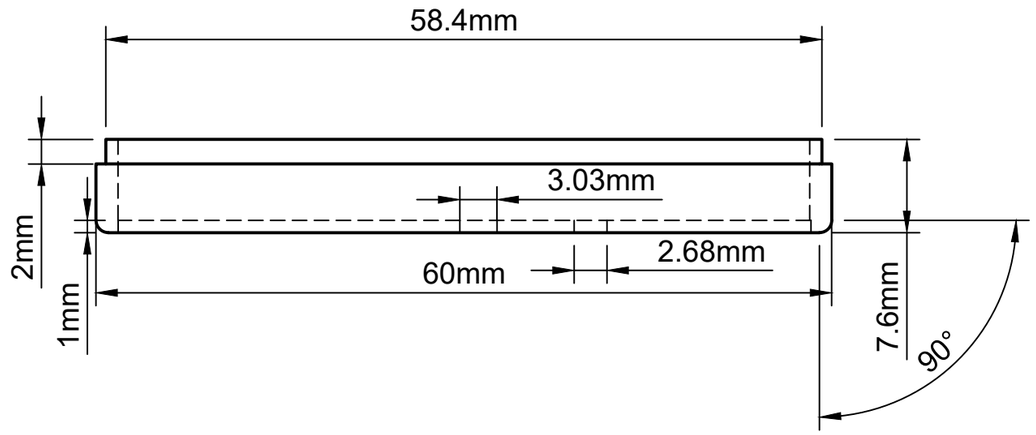

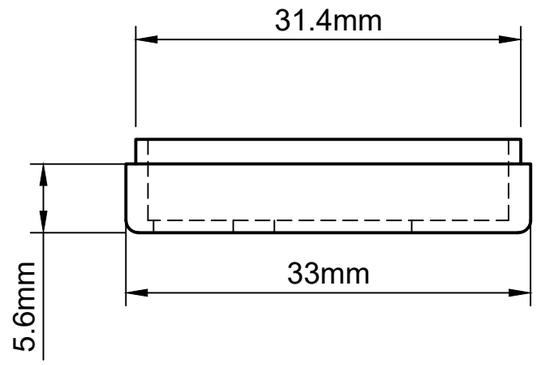

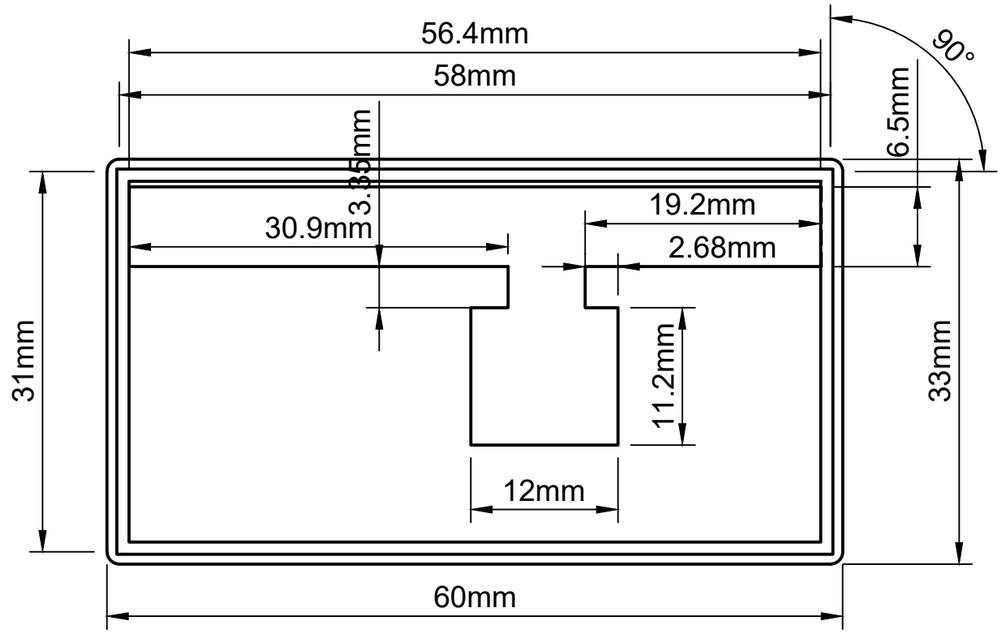

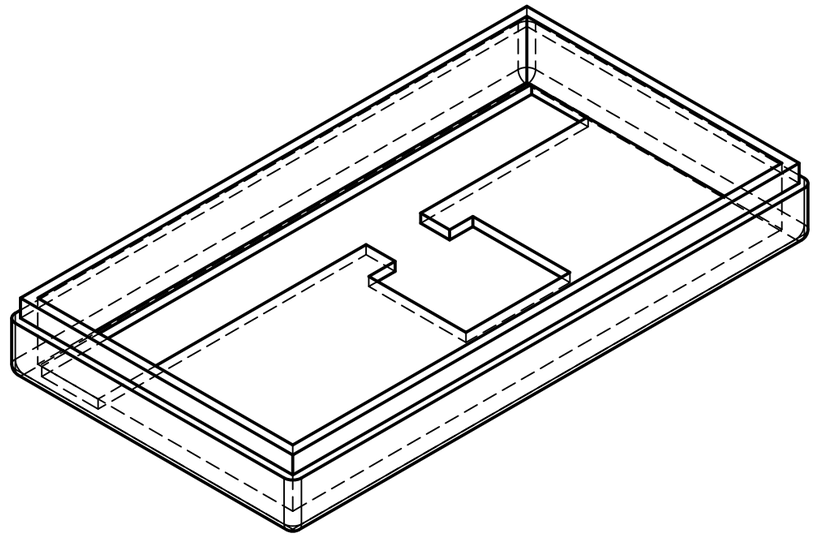

Dept.	Technical reference	Created by Moving Pets 20/01/2023	Approved by	
		Document type	Document status	
		Title Caixa Sensores - Base	DWG No.	
			Rev. / Date of issue	Sheet 1/1