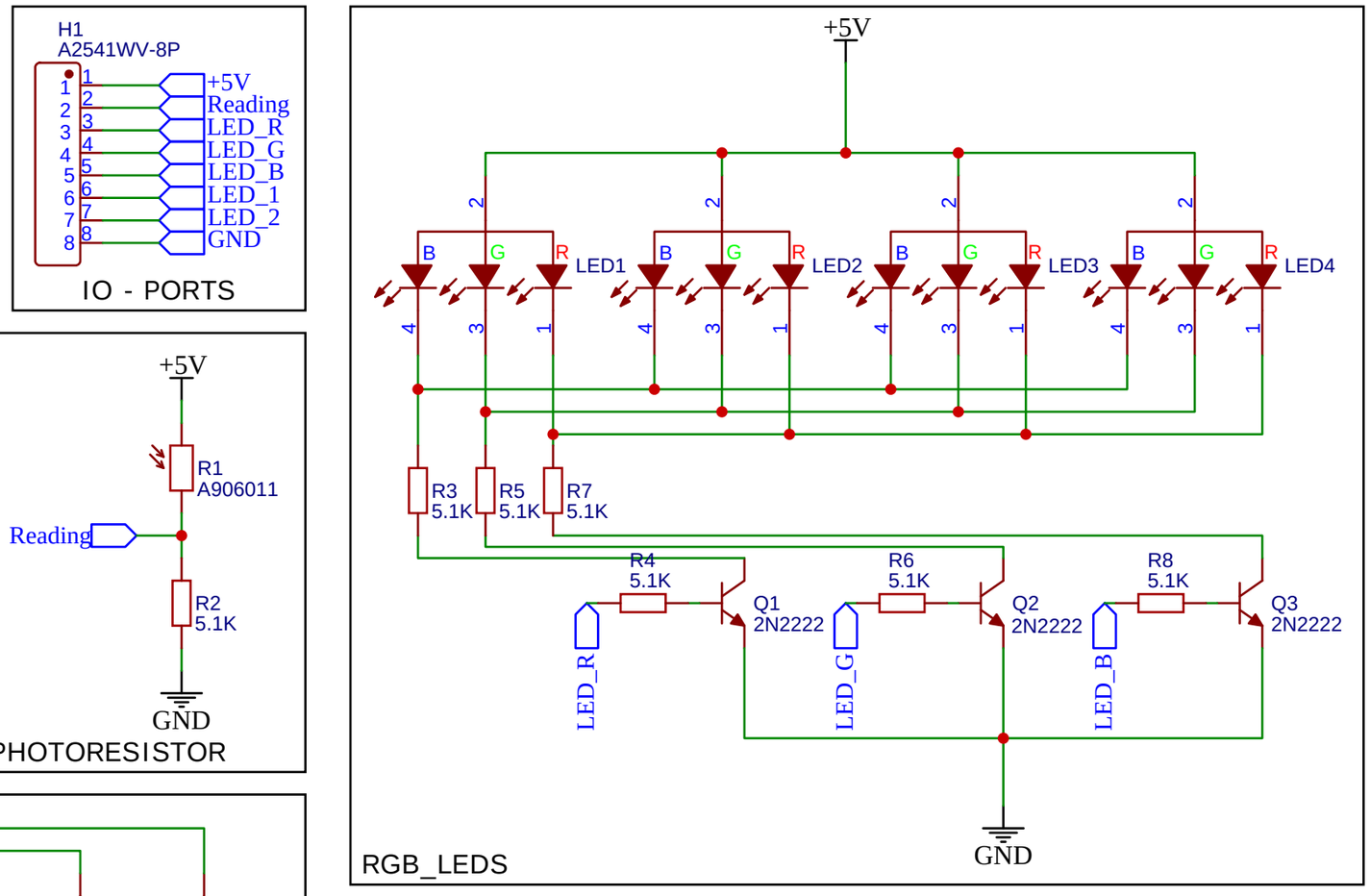


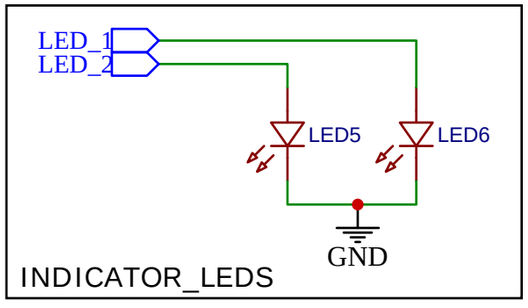


| | | |
|---|---|---|
| TITLE: THT Colorimeter | | REV: 1.0 |
| | Company: Jose Tow | Sheet: 1/1 |
| | Date: 2016-11-23 Drawn By: Jose Tow | |

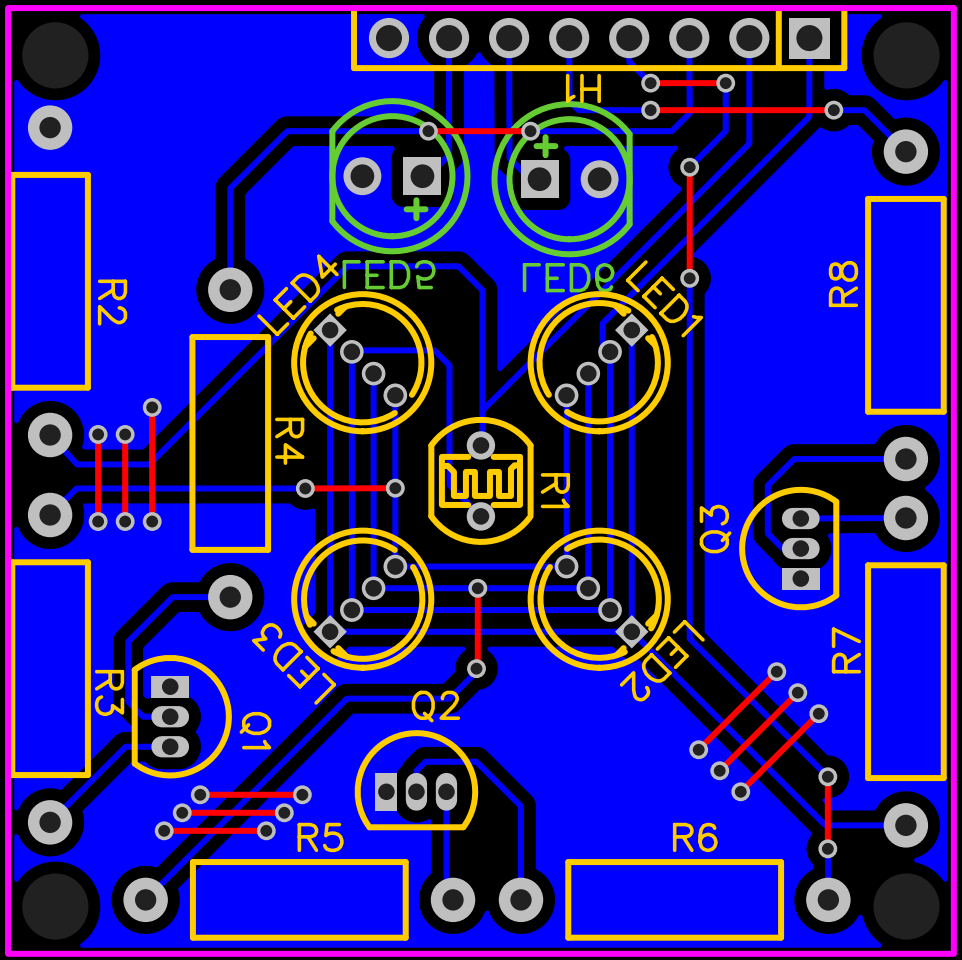
H1
LED4
LED3
LED2
LED1
R1
R2
R3
R4
R5
R6
R7
R8
Q1
Q2
Q3