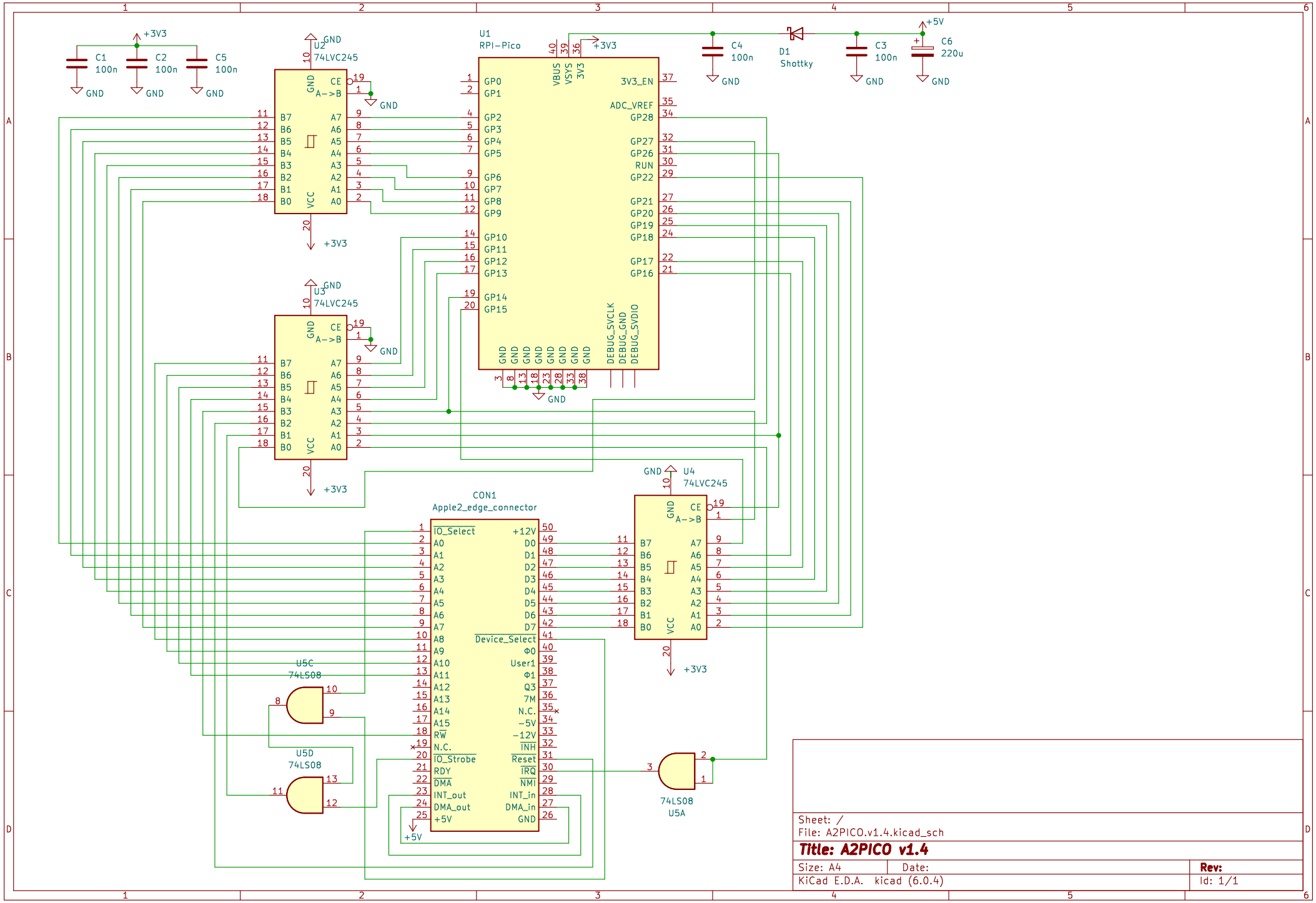
U1
RPI-Pico
U2
74LVC245
U3
74LVC245
U4
74LVC245
CON1
Apple2_edge_connector
U5C
74LS08
U5D
74LS08
U5A
74LS08
C1
100n
C2
100n
C5
100n
C4
100n
C3
100n
C6
220u
D1
Shottky
+3V3
+5V
GND
Sheet: /
File: A2PICO.v1.4.kicad_sch
Title: A2PICO v1.4
Size: A4
Date:
Rev:
KiCad E.D.A. kicad (6.0.4)
Id: 1/1