SECTION C: TECHNICAL REGULATIONS

Version:	Issue 3
Status:	PUBLISHED
Date:	01/10/2026
WMSC approval date:	30/09/2026

CONVENTION:

Black Text: Text unchanged from 2026 F1 technical Regulations - Section C at the latest issue.
Pink Text: Changes approved by the WMSC on 30 September 2026
Purple Text: Changes relative to 2026 regulations, approved by the WMSC at an earlier date
[Red Text]: Information on applicable Governance and relevant Advisory Committee
[Orange Text]: Reference information on relevant Guidance Document(s): non-binding and non-regulatory
[Green Text]: Comments / explanations / indication of further work: non-binding and non-regulatory

CONTENTS:

ARTICLE C1: GENERAL PRINCIPLES **8**

C1.1 Amendments to these Technical Regulations 8
C1.2 Dangerous construction 8
C1.3 Compliance with the regulations 8
C1.4 New systems or technologies 8
C1.5 Duty of Competitor and PU Manufacturer 9

ARTICLE C2: CONVENTIONS AND FUNDAMENTAL DIMENSIONS **10**

C2.1 Coordinate systems and conventions 10
C2.2 Principal Planes 11
C2.3 Fundamental Dimensions 11
C2.4 Reference Volumes and Surfaces 12
C2.5 Precision of Numerical Values 12

ARTICLE C3: AERODYNAMIC COMPONENTS **13**

C3.1 Aerodynamic Components or Bodywork 13
C3.2 General Principles 13
C3.3 Legality Checking 16
C3.4 Component Definition 18
C3.5 Floor Bodywork 19
C3.6 Plank and Skids 25
C3.7 Front Bodywork 27
C3.8 Rear Bodywork 30
C3.9 Tail and Exhaust Tailpipe 31

2021

C3.10 Front Wing (FW) 33
C3.11 Rear Wing (RW) 40
C3.12 Final Assembly 45
C3.13 Bodywork not defined in Articles C3.5 to C3.12 46
C3.14 Wheel Components 46
C3.15 Wheel Bodywork Assembly 50
C3.16 Apertures 51
C3.17 Suspension and Driveshaft Fairings 54
C3.18 Aerodynamic Component Flexibility 56
C3.19 Aerodynamic Component construction 63

ARTICLE C4: MASS 65

C4.1 Minimum mass 65
C4.2 Mass distribution 65
C4.3 Ballast 65
C4.4 Adding during the Race or Sprint Session 66
C4.5 Reference Mass of the driver and Driver Ballast 66
C4.6 Heat Hazard Mass Increase 66
C4.7 Determination of Nominal Tyre Mass 66

ARTICLE C5: POWER UNIT 68

C5.1 Engine specification 68
C5.2 Power Unit Energy Flow 69
C5.3 Turbo Charger 74
C5.4 Power unit geometrical constraints and dimensions 75
C5.5 Mass and centre of gravity 78
C5.6 Engine intake air 79
C5.7 Variable geometry systems 79
C5.8 Exhausts 79
C5.9 Fuel systems 80
C5.10 Ignition systems 80
C5.11 Ancillaries 81
C5.12 Power unit torque or power demand 81
C5.13 Power unit control 82
C5.14 Engine high rev limits 83
C5.15 Starting the engine 84
C5.16 Stall prevention systems 84
C5.17 Energy Recovery System (ERS) 84
C5.18 MGU-K 86
C5.19 Energy Store 87

2021

C5.20 ES design and installation 88
C5.21 ERS General electrical safety 89
C5.22 Oil and coolant systems and charge air cooling 91
C5.23 Single ICE Mode 92

ARTICLE C6: FUEL SYSTEM 93

C6.1 Fuel tanks 93
C6.2 Fittings and piping 93
C6.3 Fuel tank fillers 94
C6.4 Refuelling 94
C6.5 Fuel draining and sampling 95
C6.6 Fuel System Hydraulic Layout 95

ARTICLE C7: OIL AND COOLANT SYSTEMS AND CHARGE AIR COOLING 97

C7.1 Location of lubricating oil tanks 97
C7.2 Location of lubricating oil system 97
C7.3 Oil and coolant lines 97
C7.4 Heat exchangers 97

ARTICLE C8: ELECTRICAL SYSTEMS 98

C8.1 Software and electronics inspection 98
C8.2 Control electronics 99
C8.3 Start systems 99
C8.4 Data acquisition 99
C8.5 Telemetry 100
C8.6 Driver inputs and information 101
C8.7 Master switch 102
C8.8 Driver radio 102
C8.9 Accident analysis 102
C8.10 Accident data 104
C8.11 FIA Marshalling system 104
C8.12 Track signal information display 104
C8.13 Impact warning system 105
C8.14 Installation of electrical systems or components 105
C8.15 Timing transponders 105
C8.16 Cameras and camera housings 105
C8.17 Electromagnetic radiation 107
C8.18 Sensor signals 107

ARTICLE C9: TRANSMISSION SYSTEM 108

C9.1 Fundamental provisions 108

2027

C9.2 Clutch control 108
C9.3 Clutch Disengagement System (CDS) 110
C9.4 ~~Homologated~~ Gearbox Specification Control ~~and Component Classification~~ 110
C9.5 Gearbox Dimensions 113
C9.6 Gear ratios 114
C9.7 Reverse gear 115
C9.8 Gear changing 115
C9.9 Torque transfer systems 115
C9.10 Driveshafts 116
C9.11 Structural Connection to Survival Cell 116

ARTICLE C10: SUSPENSION, STEERING SYSTEMS, WHEELS AND TYRES 117

C10.1 Legality Setup 117
C10.2 Sprung suspension 117
C10.3 Outboard suspension 118
C10.4 Inboard suspension 120
C10.5 Steering 122
C10.6 Suspension Uprights 122
C10.7 Wheel rims 123
C10.8 Tyres 125
C10.9 Wheel attachment and retention 127
C10.10 Dimensions 128

ARTICLE C11: BRAKE SYSTEM 129

C11.1 Brake circuits and pressure distribution 129
C11.2 Brake callipers 129
C11.3 Brake discs and pads 130
C11.4 Brake pressure modulation 130
C11.5 Liquid cooling 130
C11.6 Rear brake control system 130
C11.7 Supply of Brake Friction and Brake System Hydraulic components 130

ARTICLE C12: SURVIVAL CELL 131

C12.1 General Requirements 131
C12.2 Survival cell specifications 131
C12.3 Intrusion Protection 134
C12.4 Roll Structures 135
C12.5 Cockpit Specification 137
C12.6 Cockpit Padding 138
C12.7 Front Floor Structure 140
C12.8 Seat fixing and removal 141

2027

C12.9 Driver Fit Information 141

ARTICLE C13: SAFETY STRUCTURES AND HOMOLOGATION 142

C13.1 General Principles 142
C13.2 Survival Cell Frontal Impact Test 144
C13.3 Roll Structure Testing 146
C13.4 Survival Cell Load Tests 149
C13.5 Side Impact Structure 154
C13.6 Front Impact Structure 157
C13.7 Rear Impact Structure 161
C13.8 Steering Column Impact Test 163
C13.9 Headrest Load Test 164
C13.10 Wheel Rim Impact Test 164

ARTICLE C14: SAFETY EQUIPMENT 166

C14.1 Fire Extinguishers 166
C14.2 Rear view mirrors 166
C14.3 Rear lights 167
C14.4 Safety Tethers 168
C14.5 Safety Harnesses 169
C14.6 Driver Cooling System 169
C14.7 Lateral Safety lights 170
C14.8 Driver's Drink System 170

ARTICLE C15: MATERIALS 171

C15.1 General Principles 171
C15.2 Permitted Materials (Components Outside the PU Perimeter) 171
C15.3 Specific Prohibitions and Restrictions (Components Outside the PU Perimeter) 175
C15.4 Specific Exceptions (Components Outside the PU Perimeter) 176
C15.5 Prescribed and Homologated Laminates (Components Outside the PU Perimeter) 177
C15.6 Materials, processes and construction – General (Components inside the PU Perimeter) 178
C15.7 Materials and construction – Components (Components inside the PU Perimeter) 180
C15.8 Materials and construction – Pressure charging and exhaust systems (Components inside the PU Perimeter) 182
C15.9 Materials and construction –ERS and electronic systems (Components inside the PU Perimeter) 183

ARTICLE C16: FUEL AND ENGINE OIL 184

C16.1 Basic principles 184
C16.2 Fuel properties 185
C16.3 Composition of the fuel 186
C16.4 Fuel approval 187

2027

C16.5 Fuel sampling and testing at a Competition 188
C16.6 Engine oil definitions 188
C16.7 Engine oil properties 189
C16.8 Composition of the engine oil 190
C16.9 Engine oil approval 190
C16.10 Sampling and testing at a Competition 190
C16.11 Recycling of Engine Oil 190

ARTICLE C17: COMPONENTS' CLASSIFICATION 191

C17.1 General Principles 191
C17.2 Listed Team Components (LTC) 193
C17.3 Standard Supply Components (SSC) 194
C17.4 Transferable Components (TRC) and Free Supply Components (FSC) 195
C17.5 Open Source Components (OSC and OSCNT) 197
C17.6 Defined Specification Components (DSC) 198
C17.7 List of LTC, SSC, TRC, OSC, OSCNT, and DSC 200

ARTICLE C18: POWER UNIT COMPONENTS' CLASSIFICATION 201

C18.1 General Principles 201
C18.2 Listed Power Unit Components (LPUC) 203
C18.3 Standard Supply Power Unit Components (SSPUC) 204
C18.4 Open-Source Power Unit Components (OSPUC) 205
C18.5 Defined Specification Power Unit Components (DSPUC) 207
C18.6 List of LPUC, SSPUC, OSPUC and DSPUC 208

APPENDIX C1: DEFINITIONS 209

APPENDIX C2: REGULATION VOLUMES 224

APPENDIX C3: DRAWINGS 240

APPENDIX C4: POWER UNIT SYSTEMS, FUNCTIONS, COMPONENTS AND SUPPLY PERIMETER 245

APPENDIX C5: HOMOLOGATION AND DEVELOPMENT OF POWER UNITS, FUEL AND OIL FOR 2026-2030 257

APPENDIX C6: COMPONENTS' CLASSIFICATION AND PERIMETER 264

APPENDIX C7: APPROVED CHANGES FOR FUTURE YEARS 277

Changes Approved for 2028 277
C5.2 Power Unit Energy Flow 277
C5.3 Turbo Charger 277
C5.5 Mass and centre of gravity 278

2021

C15.8 Materials and construction – Pressure charging and exhaust systems (Components inside the PU Perimeter) 278

APPENDIX C3: DRAWINGS 279

APPENDIX C4: POWER UNIT SYSTEMS, FUNCTIONS, COMPONENTS AND SUPPLY PERIMETER 280

2027

ARTICLE C1: GENERAL PRINCIPLES

Advisory Committee: TAC and PUAC

Governance: F1 Commission / PU Manufacturers' Governance Agreement / WMSC

C1.1 Amendments to these Technical Regulations

Any amendments to these Technical Regulations that do not relate specifically to the Power Unit or that relate to matters of form rather than substance (such as re–numbering, reference corrections, etc.) will not be subject to the approval of the PU Manufacturers. Any amendments to these Technical Regulations that relate to substantive matters concerning the Power Unit will be subject to the prior approval of the PU Manufacturers in accordance with the 2026 F1 PU Governance Agreement, as referenced in Article 1.1 of Appendix A7.

C1.2 Dangerous construction

The stewards may prohibit the participation of a vehicle whose construction is deemed to be dangerous. Should the relevant information become apparent during a session, such a decision may apply with immediate effect.

C1.3 Compliance with the regulations

Formula 1 Cars must comply with these regulations in their entirety at all times during a Competition.

Should a Competitor or PU Manufacturer introduce a new design or system or feel that any aspect of these regulations is unclear, clarification may be sought from the FIA Formula One Technical Department. If clarification relates to any new design or system, correspondence must include:

a. A full description of the design or system.

b. Drawings or schematics where appropriate.

c. The Competitor or PU Manufacturer's opinion concerning the immediate implications on other parts of the car of any proposed new design.

d. The Competitor or PU Manufacturer's opinion concerning any possible long–term consequences or new developments which may come from using any such new designs or systems.

e. The precise way or ways in which the Competitor or PU Manufacturer feels the new design or system will enhance the performance of the car.

C1.4 New systems or technologies

Any new system, procedure or technology not specifically covered by these Technical Regulations, but which is deemed permissible by the FIA, will only be admitted until the end of the Championship during which it is introduced. Following this the Formula One Commission will be asked to review the technology concerned and, if they consider (in their sole discretion) that such new system, procedure, or technology adds no value to Formula One in general, it may be specifically prohibited by the FIA.

©2026 Fédération Internationale de l'Automobile

C1.5 Duty of Competitor and PU Manufacturer

It is the duty of each Competitor to satisfy the FIA and the stewards that its Formula 1 Car complies with these regulations in their entirety at all times during a Competition. With regard to PUs used on a Formula 1 Car, this duty and responsibility also extends to the PU Manufacturer.

The design of the car, its components and systems shall, except for safety features, demonstrate their compliance with these regulations by means of physical inspection of hardware or materials. Unless explicitly requested by an Article, no mechanical design may rely upon software inspection as a means of assessing compliance.

To further demonstrate compliance with Articles C3.2.2 and C3.18.1, Competitors may be required to submit calculations, or to run with analytic devices specified by the FIA.

Due to their nature, the compliance of electronic systems may be assessed by means of inspection of hardware, software, and data.

CAD models may be requested by the FIA to check compliance with the Regulations. Such models should be supplied in a format and by a method specified by the FIA. In such cases, scanning technology will be used by the FIA to check that the physical car is the same as the inspected CAD models.

Each Competitor and each PU Manufacturer must ensure that all relevant personnel (whether employee, consultant, contractor, secondee or any other type of permanent or temporary personnel) associated with its participation in the Championship are appropriately informed with respect to the ways in which their areas of responsibility may impact the compliance of the Competitor and/or PU Manufacturer (as applicable) with the Regulations.

Each Competitor and each PU Manufacturer must ensure that the FIA ethics and compliance hotline with respect to the Regulations is clearly communicated to all relevant personnel.

2027

ARTICLE C2: CONVENTIONS AND FUNDAMENTAL DIMENSIONS

Advisory Committee: TAC
Governance: F1 Commission / WMSC

C2.1 Coordinate systems and conventions

C2.1.1 Car Coordinate System

The "**Car Coordinate System"** is a right−handed Cartesian [X, Y, Z] coordinate system and is defined in the following way:

a. The X axis is the longitudinal direction of the car and increases rearwards.

b. The Y axis is the transverse direction of the car and increases to the (driver's) right−hand side.

c. The Z axis is the vertical direction and increases upwards.

C2.1.2 Further conventions

a. If no units are specified, it is implicit the unit will be in millimetres

b. The terms "inboard" or "outboard", when used in reference to the Y coordinate, respectively refer to closer to or further away from the plane Y=0.

c. A suffix may be used for local coordinates in specific rules, (e.g. X_W, Y_W, Z_W), where these local axes are defined within a specific Article for local use.

d. Planes will be referred to as the axis to which they are normal to (e.g. X−Plane or X_A = 300 plane).

e. A wheel is defined to be in the straight−ahead position when its rotational axis lies in an X−Plane.

Unless otherwise specified:

f. the positive side of the Y axis is used in the various Articles and it is implicit that a symmetrical rule applies for the other side of the car.

g. any measurements and references will be with the wheels in the straight−ahead position.

h. when a viewing direction is stated, "front" and "rear" are parallel to the X axis, "side" is parallel to the Y axis (in the direction towards the plane Y = 0) and "above", "below" and "plan" are parallel to the Z axis.

i. directions of angles, slopes and incidences are taken in context of the right−handed Cartesian coordinate system defined in C2.1.1. For example, a positive slope within a Y−Plane would be characterised by positively increasing X and Z components.

j. references to axis aligned geometry are aligned to the Car Coordinate System defined in C2.1.1.

k. a load vector ([x, y, z]kN) will have components parallel to the axes of the Car Coordinate System.

C2.1.3 Wheel Coordinate System

The "**Wheel Coordinate System"** is a local right-handed Cartesian [X_W, Y_W, Z_W] coordinate system and is defined in the following way for each wheel:

©2026 Fédération Internationale de l'Automobile

a. The origin of the Wheel Coordinate System is the intersection of the rotational axis of the wheel and the inboard plane of the Wheel Rim.

b. The X_W axis lies in the inboard plane of the Wheel Rim and increases in the rearward direction. With the wheel in the straight−ahead position and the car at Legality Setup, the X_W axis is parallel to the car's X−Axis.

c. The Y_W axis is coincident with the wheel's axis of rotation and increases towards the plane Y=0. Referring to this axis, the terms "inboard" or "outboard" respectively refer to closer to or further away from the plane Y = 0.

d. The Z_W axis lies in the inboard plane of the Wheel Rim and increases upwards.

e. Once the Wheel Coordinate System is defined as above, then it maintains a fixed orientation relative to the suspension upright at all other suspension articulations.

C2.2 Principal Planes

a. The Plane Z = 0 is defined as a horizontal plane sitting at the bottom of the sprung part of the car, except for the Plank Assembly defined in Article C3.6.

b. The Plane Y = 0 is defined as the plane of symmetry of the car.

c. The Plane $X_A = 0$ is defined as the X−Plane that lies on the forward limit of the Survival Cell.

d. The Plane $X_C = 0$ is defined as the X−Plane at the rear of the Cockpit.

e. The planes $X_F = 0$ and $X_R = 0$ are defined as the X−Planes which respectively pass through the origin of the two front or two rear Wheel Coordinate Systems, with the wheels in the straight−ahead position and the car at Legality Setup.

f. The plane $X_{DIF} = 0$ is defined as the X−Plane containing the axis of rotation of the final drive as defined in Article C9.5.1.

g. The plane $X_{PU} = 0$ is defined as the X−Plane which passes through the mounting face of the connections between the ICE and the Survival Cell, as defined in Article C5.4.17.

h. The plane $X_{FIS} = 0$ is defined as the X−plane passing through the forward most point of the Front Impact Structure.

C2.3 Fundamental Dimensions

C2.3.1 Width

Except for the tyres, the Wheel Rims, and parts attached to the Wheel Rims as defined in Article C10.7.6, no part of the car may lie more than 950mm from the plane Y=0 at Legality Setup.

C2.3.2 Height

Except for the Plank Assembly, no part of the car may lie directly below the Trim and Combination of the following Reference Volumes:

a. RV-FLOOR-BODY.

b. RV-FLOOR-BIB.

c. RV-FLOOR-FOOT.

©2026 Fédération Internationale de l'Automobile

d. RV-FLOOR-SIDEWALL.

e. RV-FLOOR-FENCE.

C2.3.3 Wheelbase

The distance between the planes $X_F = 0$ and $X_R = 0$ must be less than or equal to 3400mm at Legality Setup.

C2.3.4 Front Wheel Position

The plane $X_F = 0$ must lie between $X_A = 0$ and $X_A = 150$ inclusive.

C2.3.5 Cockpit Position

The distance between $X_A = 0$ and $X_C = 0$ must be greater than or equal to 1830mm and less than or equal to 2030mm.

C2.3.6 Rear Bulkhead Position

The distance between $X_C = 0$ and $X_{PU} = 0$ must be greater than or equal to 360mm.

C2.3.7 Exhaust Exclusion Zone

Except for Tailpipe, no part of the car may lie within a right circular cylinder which intersects the planes $X_R = 385$ and $X_{DIF} = 800$, and whose axis is identical to, and diameter 20mm greater than, that of the right circular cylinder defined in C3.9.2(g).

C2.4 Reference Volumes and Surfaces

"Reference Volumes" and **"Reference Surfaces"** and their position in space are defined in Appendix C2 using the Car Coordinate System and are used throughout the Regulations for geometrical constraints. For convenience, Reference Volumes are preceded by the prefix "**RV–**" and Reference Surfaces by the prefix "**RS–**". Any component required to lie within a reference volume must lie in its entirety within it. Any component required to obscure a reference surface must obscure the entire surface.

C2.5 Precision of Numerical Values

Any numerical values specified in these Regulations as limits (maxima or minima), will be considered to be the limits regardless of the decimals quoted.

©2026 Fédération Internationale de l'Automobile

ARTICLE C3: AERODYNAMIC COMPONENTS

Advisory Committee: TAC
Governance: F1 Commission / WMSC

C3.1 Aerodynamic Components or Bodywork

"Aerodynamic Components" or **"Bodywork"** are parts of the car in contact with the External Air Stream.

a. The following components are Bodywork:

   i. all components described in Article C3.

   ii. inlet or outlet cooling ducts, up to the component they provide cooling for.

   iii. inlet ducts for the Power Unit (air boxes) up to the air filter.

   iv. primary heat exchangers, as defined in Article C7.4.1 (b).

b. The following components are not Bodywork:

   i. cameras and camera housings, as defined in Article C8.16.

   ii. rear view mirrors as defined in Article C14.2.

   iii. the ERS status light.

   iv. parts associated with the mechanical functioning of the Power Train, transmission of power to the wheels, and the steering system, provided none are designed to achieve an aerodynamic effect.

   v. Wheel Rims and tyres.

   vi brake disc assemblies, calipers, and pads.

   vii CCU Antenna

C3.2 General Principles

C3.2.1 Objectives of Article C3

The primary objectives of Article C3 are:

a. to promote close racing by minimising the aerodynamic performance loss when one car follows another.

b. to ensure aerodynamic performance remains compatible with the performance of the PU.

To assess these objectives, F1 Teams may be asked to provide relevant information to the FIA upon request.

The Intellectual Property of this information remains with the F1 Team, will be protected, and will not be disclosed to any third parties.

C3.2.2 Aerodynamic Influence

Except for the driver-adjustable bodywork specified in Articles C3.10.10 and C3.11.6 when in a State of Deployment only, minimal parts related to their operation, and Aerodynamic and flexible

2021

seals allowed by Articles C3.10.11, C3.14, C3.16.3 and C3.17.7, all Aerodynamic Components or Bodywork must:

a. be rigidly constructed and immobile relative to their defined Frame of Reference defined in Article C3.4.

b. provide a uniform, solid, hard, continuous, and impervious surface at all times.

Where an Aerodynamic Component complies with a test defined in Article C3.18, it will be considered compliant with (a) above for the deflection tested.

Any device or structure designed to bridge the gap between the sprung part of the car and the ground is strictly prohibited.

Apart from necessary parts for the adjustments described in Articles C3.10.10 and C3.11.6, and incidental movements from the steering system, any car system, device, or procedure that alters the aerodynamic characteristics of the car through driver movement is forbidden.

Furthermore, the aerodynamic effect of any component not classified as Bodywork must be incidental to its primary function. Designs intended to enhance any such aerodynamic effects are prohibited.

C3.2.3 Symmetry

All Bodywork must be nominally symmetrical with respect to Y = 0. Therefore, unless otherwise specified, any regulation in Article C3 concerning one side of the car will be assumed to be valid for the other side of the car including references to the maximum number of components allowed per side. Furthermore, any Aerodynamic Surfaces intersecting Y = 0 must be Tangent Continuous across this plane.

Minimal exceptions to the requirement of symmetry of this Article will be accepted for the installation of non-symmetrical mechanical components, for asymmetrical cooling requirements or for asymmetrical angle adjustment of the FW Primary and Secondary Flap, provided this adjustment is not controlled by the FIA Standard ECU.

Bodywork on the Unsprung Mass must respect this Article when the suspension position of each wheel is virtually reorientated so that its Wheel Coordinate System axes are parallel to their respective axis of the Car Coordinate system.

C3.2.4 Component Bodywork

Unless otherwise stated, all individual Bodywork Components described in Articles C3.5, C3.7 to C3.11, and Article C3.14, prior to any Trim and Combination operations, and before the addition of Apertures, must:

a. be single volumes that are simply connected.

b. in any X, Y and Z plane, or any X_W, Y_W and Z_W plane for Wheel Bodywork, only contain a single section.

C3.2.5 Trim and Combination

A **"Trim and Combination"** operation can only be performed once the parts to be trimmed are fully defined. The only regions of a volume that can be removed as part of a trimming process are those

©2026 Fédération Internationale de l'Automobile

that are internal to the body they are trimmed by. Once parts are trimmed and combined, and any Fillet Radius or Edge Radius permitted by the relevant Article is applied, the resultant volume must maintain both continuity and tangency in any X, Y, and Z plane at the boundaries between the adjacent sections of the parts. Unless otherwise stated:

a. The elective trimming of volumes beyond or outside of any overlap is not permitted.

b. Trim and Combination operations must result in a single volume.

C3.2.6 Fillet and Edge Radius

A **"Fillet Radius"** is formed by rounding an internal corner (included angle less than 180 degrees) with a concave surface by only adding material, whilst an **"Edge Radius"** is created by smoothing an external corner (included angle greater than 180 degrees) with a convex surface by only removing material.

In both instances, the resulting surface must consist of arcs that adhere to specified radius limits, connect two fully defined surfaces tangentially without inflection, and align perpendicularly to their intersection. Unless otherwise stated, both Fillet and Edge Radii may vary in size along the boundary perimeter, but these changes must be continuous.

If a discontinuity in tangency exists at the trailing edge where a Fillet Radius has joined parts, a Closed Aerodynamic Fairing may be added immediately behind the trailing edge. This fairing must:

a. maintain both continuity and tangency with the filleted parts.

b. fit within an Acute Circular Cone whose:

   i. base radius is 1.2 times the minimum radius necessary to fully enclose the preceding Fillet Radii and any trailing edge immediately adjacent to the Fillet Radii.

   ii. height is three times the maximum trailing edge Fillet Radius.

c. comply with Article C3.2.4 (a).

C3.2.7 Pressure Tappings

Pressure measuring apertures are permitted on the car, provided they:

a. have an internal diameter of no more than 2mm.

b. are flush with the underlying geometry.

c. are only connected to pressure sensors or are completely blanked.

C3.2.8 Section and Article Titles

Section and Article Titles within Article C3 have no regulatory value.

C3.2.9 Tangency Continuity

Unless otherwise stated, the Aerodynamic Surfaces of all Bodywork and sub-bodywork components described in C3.5 to C3.11, and C3.14 to C3.15, must maintain Tangency Continuity.

If two adjacent surfaces are not tangent continuous but can become so by applying an Edge Radius or Fillet Radius of up to 1mm along their boundary, they will be considered Tangent

©2026 Fédération Internationale de l'Automobile

Continuous at this boundary, provided the addition of these radii do not contravene any relevant Articles.

C3.3 Legality Checking

C3.3.1 Digital legality checking

Assessment of geometric compliance with Article C3 will be carried out digitally using CAD models provided by the teams. In these models:

a. Components may only be designed to the edge of a Reference Volume, or with a precise geometrical feature, or to the limit of a geometrical criterion (save for the normal round-off discrepancies of the CAD system), when the regulations specifically require an aspect of the bodywork to be designed to this limit, or it can be demonstrated that the design does not rely on lying exactly on this limit to conform to the regulations, such that it is possible for the physical bodywork to comply.

b. Components that must follow a precise shape, surface or plane, must be designed without any tolerance, save for the normal round-off discrepancies of the CAD system.

c. Bodywork required to be visible from a prescribed direction may include surfaces parallel to that direction, provided it can be shown that such parallel surfaces could instead be drawn at an infinitesimally small, included angle and still comply with all relevant Articles.

C3.3.2 Physical legality checking

Cars may be measured during a Competition to check their conformance to the CAD models discussed in Article C3.3.1 and/or to ensure they remain inside the Reference Volumes. All measurement will be made relative to the coordinate system determined by the datum points required by C3.3.3.

a. Unless otherwise stated, a tolerance of ±3mm will be accepted for manufacturing purposes only with respect to the CAD surfaces. Where measured surfaces lie outside of this tolerance but remain within the Reference Volumes, an F1 Team may be required to provide additional information (e.g. revised CAD geometry) to demonstrate compliance with the regulations. Any discrepancies contrived to create a special aerodynamic effect or surface finish are not permitted.

b. Irrespective of (a), geometrical discrepancies at the limits of the Reference Volumes must be such that the measured component remains inside the Reference Volume.

c. A positional tolerance of ±2mm will be accepted for the Front Wing Bodywork, Rear Wing Bodywork, Exhaust Tailpipe, Floor Bodywork behind $X_R = -335$, and Tail. This will be assessed by realigning each of the groups of Reference Volumes and Reference Surfaces that define the assemblies, by up to 2mm, from their original position, to best fit the measured geometry.

d. Irrespective of (b), a tolerance of Z = ±2mm will be accepted for parts of the Floor Bodywork forward of $X_R=-335$ and Plank Assembly, visible from below.

e. Minimal discrepancies from the CAD surfaces will also be accepted in the following cases:

   i. Minimal repairs carried out on Aerodynamic Components and approved by the FIA.

©2026 Fédération Internationale de l'Automobile

ii. Tape, provided it does not achieve an aerodynamic effect not otherwise permitted by Article C3.

iii. Junctions between Bodywork panels.

iv. Local Bodywork fixing details.

C3.3.3 Datum Points

All cars must be equipped with optical target mountings in the following locations. Unless otherwise stated, all positions have two targets positioned symmetrically about Y = 0.

All datum points must be accessible without removing bodywork. It is acceptable to cover the points with tape or with quickly removable covers.

a. On the top of the Survival Cell, more than 80mm from Y=0, and between $X_A = 0$ and $X_A = 300$.

b. On the top of the Survival Cell, *more than 140mm from Y = 0, and* close to $X_C = -875$.

c. On the side of the Survival Cell with $X_A < 1200$.

d. On the side of the Survival Cell close to the rear mounts of the Secondary Roll Structure.

e. Within an axis-aligned cuboid with an interior diagonal defined by points [$X_C = 0, -40, 1120$] and [$X_C = 150, -175, 840$].

f. On the lower surface of the Survival Cell, symmetrically about Y = 0, between $X_A = 0$ and $X_A = 500$, and more than 10mm from Y = 0.

g. On the lower surface of the Survival Cell, symmetrically about Y = 0, between $X_C = -300$ and $X_C = 100$, and more than 150mm from Y = 0.

h. A single probed point on the RIS or Gearbox Case.

In all cases, a file containing the coordinates of the required datum points must be supplied for each Survival Cell.

Full details of the requirements are given in the document FIA-F1-DOC-007.

C3.3.4 Supports for Scrutineering

All cars must be equipped with 4 pads of diameter 20mm that will be used to support the car during scrutineering. The pads:

a. must be rigidly mounted to the Survival Cell, ICE or Gearbox Case as appropriate.

b. must be on a Z-Plane between Z=2 and Z=10 and will be used to determine the location of the plane Z = 0 when inspecting the underside of the car.

c. must have an M8x1.25 hole in the centre with at least 4 complete threads.

d. must be in the following locations:

i. two positioned symmetrically about Y = 0, at the same X-Plane as the centre of the central hole in the plank assembly, defined in C3.6.1 (c) and 150mm from Y = 0.

ii. two positioned symmetrically about Y = 0 at the same X-plane as the centre of the rearmost hole in the plank assembly, defined in C3.6.1 (c) and 105mm from Y = 0.

Details of the mounting requirements are given in the document FIA-F1-DOC-007.

C3.4 Component Definition

The permitted bodywork and relevant Frame of Reference for each group is defined in the following Articles.

C3.4.1 Bodywork part of the sprung mass of the car

The only permissible Sprung Mass Bodywork is defined under Articles C3.5 to C3.13 and Articles C3.1.1 (a) (ii) to (iv). The Frame of Reference for all Sprung Mass Bodywork is the Car Coordinate System.

Any Bodywork subject to Final Assembly as per Article C3.12, must first be classified under one of the groups specified in Articles C3.5 to C3.11.

Compliance of each Bodywork *component* with Article C3 will be assessed independently and before any Trim and Combination operations and Fillet application described in Article C3.12, and any Aperture application described in Article C3.16.

Compliance of the Aerodynamic Surfaces of each Bodywork component with Article C3 will be assessed independently and after their boundaries have been defined by Trim and Combination operations and Fillet application described in Article C3.12, and before any Aperture application described in Article C3.16.

Furthermore, the use of components not defined as Bodywork to achieve compliance with the Bodywork regulations is not permitted. The FIA may request to inspect any removed geometry post-assembly.

After final assembly, provided any modification does not result in the surfaces becoming Aerodynamic Surfaces, modifications are allowed to the following:

a. Ducts (as specified in C3.1 (a) (ii) and C3.1 (a) (iii).

b. Non-Aerodynamic Surfaces.

C3.4.2 Wheel Bodywork

The only permissible Wheel Bodywork is defined in Articles C3.14 and C3.15. The Frame of Reference for all parts classified as Wheel Bodywork is the Wheel Coordinate System.

C3.4.3 Suspension Fairings

The only permissible Suspension Fairings are defined in Article C3.17. To assess compliance with Article C3.2.2, the Frame of Reference of any Suspension Fairing is the structural suspension member that it is attached to.

C3.4.4 Hanger

"Hanger" Bodywork, where permitted under the relevant Articles, is exempt from Article C3.2.4 (b), but must:

a. lie in its entirety within an individual, freely positioned instance of RV-HANGER.

b. be rigidly fixed to any bodywork it intersects.

©2026 Fédération Internationale de l'Automobile

c. within ~~a~~ the plane of symmetry of RV-HANGER situated between the two largest faces of RV-HANGER, connect two non-intersecting bodywork sections.

C3.5 Floor Bodywork

C3.5.1 Floor Body

"Floor Body" Bodywork must:

a. lie in its entirety within RV-FLOOR-BODY.

b. when viewed from below, fully obscure:

   i. RV-PU-ICE

   ii. RV-DIFF.

c. have up to two sections in any Z-Plane.

C3.5.2 Floor Foot

"Floor Foot" Bodywork must:

a. lie in its entirety within RV-FLOOR-FOOT.

b. when viewed from above, fully obscure RS-FLOOR-FOOT.

c. have up to two sections in any Z-Plane.

C3.5.3 Floor Sidewall

"Floor Sidewall" Bodywork must:

a. lie in its entirety within RV-FLOOR-SIDEWALL.

b. have up to two sections in any Y-Plane.

c. forward of X_R = 250 and above Z = 100, have up to two sections in any Z-Plane.

C3.5.4 Main Floor

"Main Floor" results from the Trim and Combination of the following components:

a. Floor Body.

b. Floor Foot.

c. Floor Sidewall.

A Fillet Radius, no greater than 30 mm, may be applied along the intersections between the remaining component parts.

Once fully defined, Main Floor must:

d. be a single, simply connected volume, with no overlapping regions.

e. be fully visible from either above or below, such that any surface obscured from one direction is visible from the other.

f. when viewed from the side, fully obscure RS-FLOOR-SIDEWALL.

Main Floor Aerodynamic Surfaces must:

2021

g. contain no radius of curvature less than 25mm, except for regions:

   i. within 5mm of the plan-view-boundary of Main Floor, when viewed from above or below.

   ii. within 45mm of a single point that lies in RV-FLOOR-SPHERE.

   iii. of convex curvature, visible from above, and within 10mm of the load application points defined in Article C3.18.6.

   iv. within 5mm of the Fillet Radii permitted as part of the Main Floor Trim and Combination, where the radius of curvature must be no less than 5mm.

C3.5.5 Floor Board

"Floor Board" Bodywork must:

a. lie in its entirety within RV-FLOOR-BOARD.

b. have up to three sections in any X, Y and Z-Plane.

Floor Board Aerodynamic Surfaces visible from the side must:

c. rearward of X_F = 825, at any point, in any Z-Section have a:

   i. normal with a positive X component.

   ii. tangent that forms an angle of at least 15 degrees to the X-Axis.

d. contain no concave radius of curvature less than 100mm.

Furthermore:

e. compliance with (c) and (d) is not required within 35mm of up to three points, which must sit forward of X_F = 1100 and be no closer than 50mm to each other.

C3.5.6 Floor Bib

"Floor Bib" Bodywork must:

a. lie in its entirety within RV-FLOOR-BIB.

b. be fully visible from either above or below, such that any surface obscured from one direction is visible from the other.

Floor Bib Aerodynamic Surfaces must:

c. contain no concave radius of curvature:

   i. visible from below.

   ii. less than 50mm, if visible from above.

C3.5.7 Floor Leading Edge Device

"Floor Leading Edge Device" Bodywork must:

a. lie in its entirety within RV-FLOOR-LED.

b. have up to ~~five~~ three sections in any X and Z-Plane.

©2026 Fédération Internationale de l'Automobile

c. above Z = 60, be no less than 4mm thick when measured normal to Floor Leading Edge Device Aerodynamic Surfaces only.

Floor Leading Edge Device Aerodynamic Surfaces above Z = 60 must:

d. contain no convex radius of curvature less than 2mm

C3.5.8 Floor Winglet

"Floor Winglet" Bodywork, which is exempt from Article C3.2.4, must be fitted and results from the Trim and Combination of the following components:

a. RS-FLOOR-WINGLET.

b. "**Winglet Profile"**, which must:

   i. lie in its entirety within RV-FLOOR-WINGLET.

   ii. contain no more than a single section in any X, Y and Z-Plane.

c. A single Hanger, which must:

   i. when viewed from below, be fully obscured by RS-FLOOR-WINGLET.

Furthermore, Winglet Profile Aerodynamic Surfaces must:

d. contain no concave radius of curvature less than 20mm.

Once Trimmed and Combined, Floor Winglet and the annotated surface '*TRIM*-SURFACE' may only be modified together, and in the following order:

e. Rotated by ±5 Degrees about a Y-aligned axis that passes though the point [X_R, Z] = [295, 200]

f. Translated by ±10mm in Z.

Furthermore, Floor Winglet may be:

g. trimmed below the annotated surface '*TRIM-SURFACE*' in RS-FLOOR-WINGLET.

Once fully defined, Floor Winglet must:

h. have up to two sections in any Z-Plane below the annotated surface '*TRIM-SURFACE*' in RS-FLOOR-WINGLET.

i. ~~except for C3.5.8(c),~~ lie in its entirety within RV-FLOOR-WINGLET-ENVELOPE.

C3.5.9 Floor Fence

"Floor Fence" Bodywork must:

a. lie in its entirety within:

   i. an axis aligned cuboid of the following dimensions [X, Y, Z] = [450, 40, 200]

   ii. RV-FLOOR-FENCE.

b. be fully visible from either above or below, such that any surface obscured from one direction is visible from the other.

c. have up to two sections in any Y-Plane.

Furthermore,

d. when considering a section formed by the intersection with any Z-Plane, within 100mm of the rearmost point of the section, a line tangent to any part of the section visible from the side must not form an angle greater than 5 degrees, when measured against the X-axis.

C3.5.10 Floor Corner

"Floor Corner" Bodywork is exempt from Article C3.2.4, but must:

a. lie in its entirety within RV-FLOOR-CORNER.

b. have up to 3 sections in any X-Plane.

c. have up to 4 sections in any Y-Plane.

d. have up to 2 sections in any Z-Plane.

C3.5.11 Floor Tyre IR Sensor

"Floor Tyre IR Sensor" Bodywork must:

a. lie in its entirety within a freely positioned instance of RV-FLOOR-TYRE-IR.

b. not lie within RV-FLOOR-CORNER.

c. be fully obscured by RS-FLOOR-BODY when viewed from above.

d. fully enclose an infra-red sensor for measuring tyre temperature.

Floor Tyre IR Sensor Aerodynamic Surfaces must:

e. contain no radius of curvature less than 20mm.

C3.5.12 Floor Bodywork Assembly

"Floor Bodywork Assembly" results from the Trim and Combination of the following components:

a. Main Floor.

b. Floor Bib.

c. Floor Leading Edge Device.

d. Floor Fence.

e. Floor Board.

f. Floor Winglet.

g. Floor Corner.

h. Floor Tyre IR Sensor, if fitted.

Before trimming, the following must be discarded:

i. any Floor Fence remaining above Main Floor.

j. any Floor Board remaining below Main Floor.

k. any Floor Winglet remaining inboard of Floor Sidewall.

l. any Main Floor remaining within RV-FLOOR-CORNER.

2027

m. any Floor Tyre IR Sensor remaining below Main Floor.

A Fillet Radius, no greater than 25mm, may be applied along the intersections between the remaining component parts.

Once fully defined, Floor Bodywork Assembly must:

n. be a single volume, with no overlapping regions.

o. when viewed from below, fully obscure RS-FLOOR-BODY.

p. when viewed from below, be coincident with the surfaces of RV-FLOOR-BODY that are visible from below and directly beneath:

   i. RS-FLOOR-REF.

   ii. RS-FLOOR-STEP.

q. forward of X_F = 1500, when viewed from the rear, fully obscure Floor Leading Edge Device.

r. when viewed from the side, fully obscure RS-FLOOR-BOARD.

C3.5.13 Floor Bodywork Group

Once the components defined in Articles C3.5.1 to C3.5.12 have been constructed in accordance with these provisions, including any sub-assembly operations, the resulting union is defined as "**Floor Bodywork**".

C3.5.14 Floor Auxiliary Components

Once Floor Bodywork has been fully defined and Final Assembly in Article C3.12 completed, the following "**Floor Auxiliary Components**", which are exempt from Article C3.2.4 (b), may be fitted:

a. Up to three "**Floor Body Stays**", which may be designed to only take load in tension, and each of which must:

   i. have a single inboard attachment ~~location~~ point anywhere on the Sprung Mass except Floor Bodywork that lies between X_F = ~~1775~~ 2500 and X_R = ~~275~~ 250, inboard of Y = 400 and above Z = 175.

   ~~ii. be fixed on its inboard end to the entirely sprung part of the car.~~

   ii. ~~be fixed on its outboard end to~~ have a single outboard attachment point that lies on Floor Bodywork between X_F = 2500 and X_R = 250.

   iii. have a circular cross section and lie in its entirety within a 5mm diameter right circular cylinder, except within ~~25mm~~ 30mm of the inboard and outboard attachment points~~, or within 10mm of any adjustment mechanism.~~ The circular bases of the right circular cylinder must lie in their entirety within 30mm of the attachment points.

   iv. when viewed from below, be fully obscured with Floor Bodywork in place.

   v. not intersect any surfaces of Bodywork, except within 25mm of the inboard and outboard attachment points, and within 7mm of up to two points which lie on the Engine Cover.

   Additionally:

vi. one mechanism per stay, which must only adjust the axial length of that stay, is permitted. This must be entirely contained with a 5mm offset of the right circular cylinder defined in (iii) and have no dimension that exceeds 100mm.

b. Up to eight Hangers, each of which must:

i. intersect Floor Board.

ii. lie no closer than 50mm to any other Hanger.

iii. when viewed from the side and below, be fully obscured with Floor Bodywork in place.

iv. lie in its entirety within the union of RV-FLOOR-BOARD and RV-FLOOR-FOOT.

c. A single "**Floor Board Brace**", which must:

i. lie in its entirety within a 40mm diameter right circular cylinder and RV-FLOOR-BRACE, except within 2mm of Forward Chassis and 35mm of the intersection point of the right circular cylinder's axis and Forward Chassis.

ii. be rigidly fixed at its inboard end to Forward Chassis.

iii. be rigidly fixed at its outboard end to Floor Board.

iv. when viewed from the side, be fully obscured with Floor Bodywork in place, except within 2mm of Forward Chassis and 35mm of the intersection point of the right circular cylinder's axis and Forward Chassis.

d. A single fairing, if necessary, to shroud the single device permitted in Article C12.7, which must:

i. be fully within RV-BIB-STAY and be symmetrically arranged about Y = 0.

ii. in any Z-plane contain only one section.

e. A single "**Floor Foot Stay**", which may be designed to only take load in tension, must:

i. have a single inboard attachment point that lies no more than 25mm distant from the intersection of Floor Board Brace and Forward Chassis, or in the absence of a Floor Board Brace, within RV-FLOOR-BRACE.

ii. have a single outboard attachment point that lies on Floor Foot.

iii. be fixed at its inboard end to Forward Chassis.

iv. be fixed at its outboard end to Floor Foot.

v. when viewed from the side, be fully obscured with Floor Bodywork in place.

vi. ~~lie in its entirety within a 10mm diameter right circular cylinder~~ have a circular cross section and lie in its entirety within a 10mm diameter right circular cylinder, except within 25mm of the inboard and outboard attachment points~~, or within 10mm of any adjustment mechanism~~. The circular bases of the right circular cylinder must lie in their entirety within 25mm of the attachment points.

Additionally:

vii. one mechanism, which must only adjust the axial length of that stay, is permitted. This must be entirely contained with a 5mm offset of the right circular cylinder defined in (vi) and have no dimension that exceeds 100mm.

Furthermore, once all Floor Auxiliary Components have been defined:

f. they must be Trimmed and Combined with any Bodywork they intersect.

g. a Fillet Radius no greater than ~~20mm, may be applied along the intersections between Floor Auxiliary Components and any other Bodywork~~ ~~5mm may be applied along the intersections between Floor Body Stay geometry and any other Bodywork. Fillet radii, not greater than~~ 20mm, may be applied along the intersections between any ~~other~~ Floor Auxiliary Component, except Floor Body Stays and Floor Foot Stays, and any other Bodywork.

C3.6 Plank and Skids

C3.6.1 Plank Assembly

A **"Plank Assembly"** must be fitted, consisting of the Plank, Skids and mountings.

The following provisions apply to the Plank Assembly:

a. The upper surface of the Plank Assembly must lie at Z = 0, and must not be in contact with the External Air Stream.

b. The geometry of the Plank Assembly must conform to RV-PLANK with a general manufacturing tolerance of ±0.5mm when new, unless a specific dimensional tolerance is defined.

c. The Plank Assembly must have three 34mm diameter holes whose axes are parallel to the Z−axis. The centres must lie on Y = 0 and have X-locations:

i. X_F = ~~500~~ 800,

ii. $-600 \geq X_C \geq -800$, and on or behind X_F=1000.

iii $470 \leq X_{PU} \leq 630$~~. Furthermore, the centre of the rearmost hole must lie~~ and on or ahead of $X_R = -500$.

d. The thickness of the Plank Assembly measured normal to the lower surface must be 10mm ± 0.2mm and must be uniform when new. A minimum thickness of 8mm will be accepted due to wear, and conformity to this provision will be checked at the peripheries of the holes required by (c) above.

Evaluation of Skid wear will be made by physical measurement of the Skid with it removed from the car. The Measurement will be made with a micrometer with a 6.35mm diameter anvil. When measured in this way, the entire periphery of each hole must be within the specified tolerance.

Four additional 10mm diameter holes are permitted provided their sole purpose is to allow access to the bolts which secure the FIA ADR to the Survival Cell.

C3.6.2 Plank

The following provisions apply to the **"Plank"**:

a. The material of the Plank is defined in C15.3.5. ~~free, but it must be homogeneous with a specific gravity between 1.3 and 1.45, or if pocketed be made from a bonded assembly the upper 0.5mm of which must have a specific gravity of between 1.3 and 1.65 and the remainder, excluding pockets, be made from a homogeneous material with a specific gravity of between 1.3 and 1.45.~~

b. The Plank may comprise no more than three pieces, the forward one of which may not be any less than ~~900mm~~ 600mm in length.

c. Except for areas;

   i. forward of ~~Between~~ X_F = ~~630~~ 930

   ii. between X_C = −800 and ~~behind~~ X_C = −400

   pocketing of the Plank is permitted between Z=-7 and Z=-0.5. The periphery of any pocket, in any Z-Plane, must be not less than 10mm from either the edges of the Plank or any holes or recesses in the Plank. In any vertical plane, the internal pocket Fillet Radii must be at least 3mm and in any Z-Plane, must be at least 10mm. Pockets may only be filled with a material having a specific gravity of less than 0.25.

C3.6.3 Skids

The lower surface of the Plank may be fitted with flush mounted Skid material which can only be fitted in place of plank material. **"Skids"** may only be fitted around each of the 3 holes defined in C3.6.2.c and must conform to the geometries specified below.

A metallic Skid is mandatory around the forward-most Plank hole. A metallic Skid is optional around the middle and rearward-most Plank holes. If a metallic Skid is not present, it may be either; replaced with a separate piece of Plank material, or integrated into the Plank. The resulting geometry must contain the hole and counterbore detail present in RV-SKID-MID and RV-SKID-REAR.

a. The Skid material around the forward-most hole in the plank must:

   i. be made to the geometry defined by RV-SKID-FWD and associated drawing.

   ii. be divided into three separate parts as defined in the Reference Volume.

   iii. fastened directly to the Front Floor Structure with zero degrees of freedom

b. If metallic, the Skid material around the central hole in the plank must:

   i. be made to the geometry defined by RV-SKID-MID and associated drawing.

   ii. be divided into three separate parts as defined in the Reference Volume.

c. If metallic, the Skid material around the rear-most hole in the plank must:

   i. be made to the geometry defined by RV-SKID-REAR and associated drawing.

   ii. be divided into three separate parts as defined in the Reference Volume.

d. Metallic Skids must be made from materials as defined in C15.3.6 ~~either:~~

   ~~iii. Titanium alloy Ti6Al4V (according to AMS4928 or AMS4911) in annealed condition. No additional heat treatment is permitted; or~~

~~iv. 17-4PH stainless steel (to AMS 5604 / ASTM A 693 or AMS 5643/ ASTM A 564). When the skid is new, its hardness must be no more than 38 HRC.~~

~~Furthermore, they may only be machined from solid and no processes (such as forging, rolling, welding, or coating) may be carried out either before or after machining.~~

The material to be used in each Competition is defined in FIA-F1-DOC-041.

The only permitted deviation from the specified geometry is the removal of minimum material for the fasteners.

C3.6.4 Plank and Skid Mountings

The Plank, and Skids must be fixed to the car using fasteners which are no smaller than M6 and are made from grade 12.9 or 10.9 steel.

If used to attach a Skid to the car, the number of fixings for each type of Skid is defined as follows:

a. RV-SKID-FWD: three fixings in each of the two forwardmost resulting Skids and two fixings for the rearward most resulting Skid.

b. RV-SKID: two fixings in each of the resulting Skids.

c. when viewed from below, no part of the Skid can be more than 50mm from the centre line of a fastener which passes through that Skid.

d. No fastener machining, including counterbores or countersinks, may lie in the areas indicated in drawings FIA-LEG-0235 and FIA-LEG-0236.

If used to attach the Plank to the car:

e. May use a load spreading washer if required.

f. The total area of the fasteners and any load spreading washers employed with them when viewed from below must be less than 10 000 mm^2, the area of any single fastener plus its load-spreading washer may not exceed 500mm^2.

g. no part of any load-spreading washer may be below Z = −7. The Skids referred to in C3.6.3 are not considered as load spreading washers.

The following provisions apply to each single fastener

h. the shanks of the fasteners (which may be no less than 6mm diameter) must be the weakest point in the attachment of metallic Skids to the car.

i. no part of any fastener may be below Z = −7.5.

C3.7 Front Bodywork

C3.7.1 Nose

"Nose" Bodywork must:

a. lie in its entirety within RV-NOSE.

b. when viewed from above, fully obscure RS-NOSE ahead of X_A = 0.

Nose Aerodynamic Surfaces, must be Tangent Continuous, and in any X-Plane must:

c. contain no concave radius of curvature.

d. between $X_F = -950$ and $X_A = 0$, have a section that when viewed from above:

   i. is tangent to the Z-Axis at its outermost extremity.

   ii. contains no radius of curvature less than 45mm at $X_A = 0$.

   iii. contains no radius of curvature less than 20mm forward of $X_A = 0$.

Furthermore, the following will be exempt from the above:

e. Cameras in Position 2.

f. Mounting brackets defined in Article C8.16.7.

C3.7.2 Forward Chassis

"Forward Chassis" Bodywork must:

a. lie in its entirety within RV-CH-FRONT.

b. fully enclose RV-CH-FRONT-MIN.

c. have up to two sections in any Z-Plane.

Forward Chassis Aerodynamic Surfaces, in any X-Plane, must contain:

d. no convex radius less than 45mm.

e. no concave radius less than 500mm.

C3.7.3 Mid Chassis

"Mid Chassis" Bodywork must:

a. lie in its entirety within RV-CH-MID.

b. have up to two sections in any Z-Plane.

Mid Chassis Aerodynamic Surfaces must contain:

c. no concave radius of curvature less than 50mm, except for regions within:

   i. 50mm of the Secondary Roll Structure.

   ii. 25mm of the Aperture defined in Article C3.16.10.

d. no convex radius of curvature less than 25mm below Z = 200.

C3.7.4 Roll Hoop

"Roll Hoop" Bodywork is exempt from Article C3.2.4, but must:

a. lie in its entirety within RV-ROLL-HOOP.

C3.7.5 Mirror

"Mirror Body" Bodywork must:

a. lie in its entirety within RV-MIRROR-BODY.

©2026 Fédération Internationale de l'Automobile

b. fully enclose an individual instance of RV-LATERAL-SAFETY-LIGHT which may be freely translated along any axis, and rotated up to +/-5deg about any Z-axis only.

c. have an external surface coincident with the highlighted surface of RV-LATERAL-SAFETY-LIGHT.

"Mirror Inner Stay" Bodywork must:

d. lie in its entirety within RV-MIRROR-ISTAY.

e. intersect Mirror Body and Mid Chassis.

"Mirror Rear Stay" bodywork must:

f. lie in its entirety within RV-MIRROR-RSTAY.

g. intersect Mirror Body and Sidepod.

h. in any X-Plane, measure less than:

   i. 50mm in Z.

   ii. 10mm in Y.

"Mirror" results from the Trim and Combination of the following components:

i. Mirror Body.

j. Mirror Inner Stay.

k. Mirror Rear Stay.

A Fillet Radius, no greater than 10mm, may be applied along the intersections between the remaining component parts.

Once fully defined, Mirror must:

l. be a single volume with no overlapping regions.

C3.7.6 Driver Cooling

"Driver Cooling" Bodywork must:

a. lie in its entirety within RV-DRI-COOL.

b. be fully visible from either above or below, such that any surface obscured from one direction is visible from the other.

Driver Cooling Aerodynamic Surfaces must:

c. contain no radius of curvature less than 10mm.

C3.7.7 Front Bodywork Assembly

"Front Bodywork Assembly" results from the Trim and Combination of the following components:

a. Nose.

b. Forward Chassis.

c. Mid Chassis.

2021

d. Roll Hoop.

e. Mirror.

f. Driver Cooling, if present.

A Fillet Radius, no greater than 15mm, may be applied along the intersections between the remaining component parts.

Once fully defined, Front Bodywork Assembly must:

g. be a single volume, with no overlapping regions.

C3.7.8 Front Bodywork Group

Once the components defined in Articles C3.7.1 to C3.7.7 have been constructed in accordance with these provisions, including any sub-assembly operations, the resulting union is defined as "**Front Bodywork**".

C3.8 Rear Bodywork

C3.8.1 Sidepod

"Sidepod" Bodywork must:

a. lie in its entirety:

   i. within RV-SIDEPOD.

   ii. more than 50mm from Floor Board.

Sidepod Aerodynamic Surfaces must contain:

b. no convex radius less than 50mm.

c. no concave radius less than 100mm.

Furthermore, compliance with:

d. (b) and (c) is not required within 20mm of the upper Side Impact Structure, where the radius of curvature must not be less than 10mm.

e. (b) is not required within 25mm of the Aperture C3.16.9, where the convex radius must not be less than 5mm.

C3.8.2 Engine Cover

"Engine Cover" Bodywork must:

a. lie in its entirety within RV-EC.

b. have up to two sections in any Z-Plane.

c. when viewed from the side, fully obscure RS-EC.

Engine Cover Aerodynamic Surfaces, in any X-Plane outboard of Y = 5, must contain:

d. no convex radius of curvature less than 75mm.

e. no concave radius of curvature less than 50mm.

©2026 Fédération Internationale de l'Automobile

Furthermore, when considering Aerodynamic Surfaces only:

f. compliance with (d) and (e) is not required:

   i. within 20mm of the upper and lower Side Impact Structures, where the radius of curvature, measured independent of direction, must not be less than 10mm.

   ii. within 20mm of the CCU Antenna, defined in Article C8.5.4, where the radius of curvature, measured independent of direction, must not be less than 5mm.

   iii. inboard of Y = 25, where the radius of curvature, in any X-Plane, must not be less than 25mm.

g. rearward of $X_R = -300$ and below Z = 350, the X component of any normal to the surface visible from the side must not be negative.

h. there must be no surface parallel to an X-Plane ahead of $X_R = -55$.

C3.8.3 Rear Bodywork Assembly

"Rear Bodywork Assembly" results from the Trim and Combination of the following components:

a. Sidepod.

b. Engine Cover.

Once fully defined, Rear Bodywork Assembly must:

c. be a single, simply connected volume, with no overlapping regions.

C3.8.4 Rear Bodywork Group

Once the components defined in Articles C3.8.1 to C3.8.3 have been constructed in accordance with these provisions, including any sub-assembly operations, the resulting union is defined as **"Rear Bodywork"**.

C3.9 Tail and Exhaust Tailpipe

C3.9.1 Tail

"Tail" Bodywork must:

a. lie in its entirety within RV-TAIL.

b. when viewed from below, be fully obscured by Floor Body forward of $X_R = 295$.

c. below Z = 450, have up to three sections in any Z-Plane.

C3.9.2 ~~Exhaust~~ Tailpipe

"~~Exhaust~~ Tailpipe" Bodywork ~~is exempt from Article C3.2.4 (a), but~~ must:

a. lie in its entirety within RV-TAILPIPE.

Tailpipe Bodywork is exempt from C3.2.4 (a) and, assessing (b) to (g) across both sides of the car, must:

b. have up to two sections in any Y and Z-Plane.

~~c. have a wall thickness of between 0.5mm and 3mm.~~

©2026 Fédération Internationale de l'Automobile

c. only have an exit whose entire circumference lies:

   i. between X_R = 390 and X_R = 400.

   ii. above Z = 350.

d. over its last 370mm, have an internal surface with a circular ~~internal~~ cross-section of a constant diameter between 90mm and 130mm.

e. lie entirely within 3mm from the internal surface when measured normal to the internal surface and in a direction that does not pass through Y=0.

f. be no less than 0.5mm thick (being the minimum distance when measured normal to the surface).

~~g. remain unobstructed internally and in full compliance with the provisions of this Article after Final Assembly of all Bodywork groups and application of Apertures.~~

~~When considering both sides of the car, over its last 150mm it must:~~

~~h. comprise of a single tailpipe and a support.~~

   ~~i. The support is exempt from Article C3.2.4 and must lie in its entirety within an individual instance of RV-TAILPIPE-BRACKET.~~

   ~~ii. RV-TAILPIPE-BRACKET may have a free orientation in space but must intersect both Exhaust Tailpipe and Tail.~~

g. over its last 150mm have an internal surface which is a right circular cylinder and has a single axis that:

   i. lies on Y = 0.

   ii. forms an angle between 0.0 and 2.5° to the X-Axis (tail up).

C3.9.3 Tailpipe Bracket

"Tailpipe Bracket" Bodywork is exempt from C3.2.4 and, when considering both sides of the car, must:

a. lie in its entirety within a freely positioned, individual instance of RV-TAILPIPE-BRACKET.

b. lie in its entirety between X_R = 185 and X_R = 385.

c. intersect both Tailpipe and Tail.

C3.9.4 Exhaust Tailpipe

"Exhaust Tailpipe" results from the Trim and Combination of the following components:

a. Tailpipe.

b. Tailpipe Bracket.

Once fully defined, ~~Exhaust Tailpipe must:~~

c. Exhaust Tailpipe must be a single volume, with no overlapping regions.

d. Tailpipe must remain unobstructed internally and in compliance with the provisions of this Article after Final Assembly of all Bodywork groups and application of Apertures.

C3.10 Front Wing (FW)

C3.10.1 Front Wing Profiles

"Front Wing Profiles" Bodywork is exempt from C3.2.4 (b) but must:

a. lie in its entirety within RV-FW-PROFILES.

b. comprise of up to three, non-intersecting, simply connected volumes.

c. have up to three sections in any Y-Plane.

d. when viewed from above, fully obscure RS-FW-PROFILES.

In any Y-Plane:

e. the rearmost point of every section must be visible when viewed from below.

f. except for the rearmost section, the rearmost point of every section must not be visible when viewed from above.

g. assessing each section independently, within 40mm of the rearmost point of each section:

   i. a line tangent to any part of the section visible from below must have a positive slope. The slope of this line will be considered in the Y-Plane.

   ii. no part of the section visible from above may be more than 10mm distant from the section visible from below, if outboard of Y = 400, or 15mm if inboard of Y = 400.

h. contain:

   i. no concave radius of curvature visible from below.

   ii. no concave radius of curvature less than 50mm visible from above.

Furthermore:

i. when measured against a vertical plane normal to RS-FW-SECTION, contain no normal to any point on the surface that subtends an angle greater than 30°. For volumes thicker than 0.5mm in their entirety (measured normal to the surface on any Y-Plane), compliance with this Article may be determined prior to application of any Edge Radii necessary to demonstrate compliance with C3.3.1 (a).

j. compliance with (i) is not required for surfaces that lie exactly on Y = 0 or Y = 675.

k. At all points along the span, the minimum distance between adjacent Front Wing Profiles volumes must be between 5mm and 15mm when measured with a spherical gauge.

l. The rearmost point of every individual Y-section, when projected in Z onto a plane through Z = 0, must produce a single tangent continuous curve with no radius of curvature less than 200mm.

Once the Front Wing Profiles bodywork is fully defined, Gurneys up to 10mm in height may be fitted to the trailing edge of the upper surface of the rearmost section. These Gurneys are considered to be part of the Front Wing Profiles and must satisfy the provisions of this Article except for (g) and (h) and, for the inner extremity of the innermost Gurney and outer extremity of the outermost Gurney, (i).

©2026 Fédération Internationale de l'Automobile

C3.10.2 Front Wing Endplate Body

"Front Wing Endplate Body" Bodywork must:

a. lie in its entirety within RV-FWEP-BODY.

b. have up to two sections in any Y-Plane.

Front Wing Endplate Body Aerodynamic Surfaces must contain:

c. no convex radius of curvature less than 5mm.

d. no concave radius of curvature less than 100mm.

C3.10.3 Front Wing Outboard Footplate

"Front Wing Outboard Footplate" Bodywork must:

a. lie in its entirety within RV-FWEP-OFP.

b. below Z = 160, have up to two sections in any Z-Plane.

c. rearwards of $X_F = -425$, have up to two sections in any X-Plane.

Front Wing Outboard Footplate Aerodynamic Surfaces must contain:

d. no radius of curvature less than 5mm.

e. no concave radius of curvature less than 50mm visible from below.

f. no concave radius of curvature less than 50mm outboard of Y = 825mm.

C3.10.4 Front Wing Inboard Footplate

"Front Wing Inboard Footplate" Bodywork must:

a. lie in its entirety within RV-FWEP-IFP.

C3.10.5 Front Wing Endplate Diveplane

"Front Wing Endplate Diveplane" Bodywork must:

a. lie in its entirety within:

   i. an axis aligned cuboid of the following dimensions [X, Y, Z] = [300, 325, 50].

   ii. RV-FWEP-DIVEPLANE.

Front Wing Endplate Diveplane Aerodynamic Surfaces must contain:

b. no convex radius of curvature less than 5mm.

c. no concave radius of curvature less than 50mm.

C3.10.6 Front Wing Endplate

"Front Wing Endplate" results from the Trim and Combination of the following components:

a. Front Wing Endplate Body.

b. Front Wing Outboard Footplate.

c. Front Wing Inboard Footplate.

2027

d. Front Wing Endplate Diveplane, if fitted.

Before trimming, any Front Wing Endplate Body remaining below Front Wing Inboard Footplate must be discarded.

A Fillet Radius, no greater than 40mm, may be applied along the intersections between Front Wing Endplate Body and Front Wing Diveplane. A Fillet Radius, no greater than 10mm, may be applied along the intersections between the remaining component parts.

Once fully defined, Front Wing Endplate must:

e. be a single, simply connected volume, with no overlapping regions.

f. be no less than 10mm thick (being the minimum distance when measured normal to the surface), if visible from the side.

g. when viewed from above, fully obscure RS-FWEP-TOP:

h. when viewed parallel to the Y-Axis from inboard, fully obscure RS-FWEP-SIDE and Front Wing Endplate Diveplane.

C3.10.7 Front Wing Pylon

"Front Wing Pylon" Bodywork must:

a. lie in its entirety within RV-FW-PYLON.

b. in any Z-Plane:

   i. have a total area no greater than 6000 mm^2.

   ii. have a section thickness no more than 35mm when measured in the Y direction.

C3.10.8 Front Wing Strake

"Front Wing Strake" Bodywork must:

a. lie in its entirety within:

   i. an axis aligned cuboid of the following dimensions [X, Y, Z] = [775, 20, 100].

   ii. RV-FW-STRAKE.

b. have up to two sections in any Y or Z-Plane.

C3.10.9 Front Wing Assembly

"Front Wing Assembly" results from the Trim and Combination of the following components:

a. Front Wing Profiles.

b. Front Wing Endplate.

c. Front Wing Pylon.

d. Front Wing Strake, if fitted.

Before trimming is applied, any Front Wing Profiles remaining outboard of Front Wing Endplate and any Front Wing Pylon remaining below Front Wing Profiles must be discarded.

A Fillet Radius, no greater than 10mm, may be applied along the intersections between the remaining component parts.

Once fully defined, Front Wing Assembly must:

e. be a single volume, with no overlapping regions.

f. when viewed from below, fully obscure Front Wing Pylon.

g. when viewed from above, fully obscure Front Wing Strake forward of $X_F = -715$, if fitted.

C3.10.10 Front Wing Adjuster System

The "**Front Wing Adjuster System"** is defined as follows:

a. **"FW Primary Flap"**, if fitted, must:

   i. be a continuous portion of Front Wing Profiles, excluding the forwardmost volume.

   ii. rotate about the "**Primary Axis"**, which must pass through Point A and Point B and be fixed relative to the forwardmost volume of Front Wing Profiles.

b. "**FW Secondary Flap"**, if fitted, must:

   i. be a continuous portion of only the rearmost volume of Front Wing Profiles.

   ii. rotate about the **"Secondary Axis"**, which must pass through Point C and Point D and be fixed relative to either the Primary Flap if fitted, or the forwardmost volume of Front Wing Profiles.

c. Both FW Primary Flap and FW Secondary Flap must include any fitted Gurneys and any parts of Front Wing Auxiliary Components that are rigidly attached to the respective volumes.

d. "**Point A"** and "**Point B"** must lie:

   i. within the volume of FW Primary Flap.

   ii. no more than 25mm from the forwardmost point of FW Primary Flap at their respective Y positions.

e. "**Point C"** and "**Point D"** must lie:

   i. within the volume of FW Secondary Flap.

   ii. no more than 25mm from the forwardmost point of FW Secondary Flap at their respective Y positions.

f. Point A and Point C must lie inboard of Y = 150.

g. Point B and Point D must lie between Y = 475 and Y = 675.

With Front Wing Profiles positioned to comply with Article C3.10.1, up to two pairs of rotation surfaces (four in total) must be defined as follows:

h. "**Primary Rotation Surfaces"**, which must:

   i. use the Primary Axis as their axis of revolution.

   ii. pass through Point A for the first surface and Point B for the second surface.

©2026 Fédération Internationale de l'Automobile

iii. extend over the complete chord of FW Primary Flap.

i. **"Secondary Rotation Surfaces"**, which must:

i. use the Secondary Axis as their axis of revolution.

ii. pass through Point C for the third surface and Point D for the fourth surface.

iii. extend over the complete chord of FW Secondary Flap.

j. Over their intersection with the FW Primary and Secondary Flaps at their original design position (defined in accordance with Article C3.10.1), no surface of rotation may have a normal which forms an angle greater than 30 degrees to the Y-Axis.

Compared to the position of Front Wing Profiles defined in Article C3.10.1, adjustment not controlled by the FIA Standard ECU is only allowed when the car is stationary and by the use of a tool, and in accordance with the Sporting Regulation and must:

k. not result in a decrease in incidence of the tangent lines defined in Article C3.10.1 (g) (i).

l. result in a maximum deviation for any point of Front Wing Profiles no greater than:

i. 30mm for FW Primary Flap.

ii. 60mm for FW Secondary Flap.

Any adjustment of Front Wing Profiles controlled by the FIA Standard ECU must:

m. be about one of the Primary Axis or Secondary Axis only.

n. when commanded, switch to one of two fixed positions defined as follows:

i. a **"Corner Mode"** position, that conforms to a position defined in (k) and that remains identical following any Straight Mode operation to its position beforehand.

ii. a **"Straight Mode"** position that, when compared to the Corner Mode position, results in a decrease in incidence of FW Primary Flap and/or FW Secondary Flap. Furthermore, except when limited by a physical stop defined in (u), the magnitude of decrease must remain constant.

o. have a maximum transition time between the two fixed positions that does not exceed 300ms ~~400ms~~, measured from the instant at which the command to change mode is issued by the FIA Standard ECU until the position sensor(s), connected to the FIA Standard ECU, confirm that the commanded fixed position has been reached.

p. be driven by up to two actuators, across both sides of the car.

q. be measured by position sensors, one for each of the actuators defined in (p), which:

i. are mechanically linked to Front Wing Profiles.

ii. output analogue signals calibrated over the actuator travel.

iii. are connected to the FIA Standard ECU as specified by the FIA.

r. be symmetrical about Y=0.

Furthermore:

©2026 Fédération Internationale de l'Automobile

s. Irrespective of whether the adjustment is controlled by the FIA Standard ECU, any fitted FW Primary Flap and FW Secondary Flap must:

   i. except for Front Wing Fishplates, Front Wing Adjuster Fairing and any fitted Gurneys, remain in their entirety within RV-FW-PROFILES.

   ii. retain the geometric relationship between all elements of FW Primary Flap, except when adjusting about the Secondary Axis only.

   iii. retain the geometric relationship between all elements of FW Secondary Flap.

   iv. conform with all bodywork regulations except for ~~Article~~ C3.2.4 (b), ~~Article C3.10.11 (g) (i) and~~ C3.4.4 (a) and (c), sub-clauses (b) to (l) of ~~Article~~ C3.10.1 and sub-clauses (c) (i), (h) (i), (g) (i) and (m) of C3.10.11.

t. Except for a failure of the Front Wing Adjuster System, or during the transition between Corner Mode and Straight Mode, FW Primary Flap and FW Secondary Flap can only have the two positions defined in (n).

u. Physical Stops must be provided to prevent both FW Primary Flap and FW Secondary Flap from being rotated external to RV-FW-PROFILES.

v. The design ~~is such that failure of the system will result in it returning to its Corner Mode position. is such that~~ must consider failure modes of the system that will prevent the FW Flap returning to its Corner Mode position and minimises these risks. Teams must submit documents demonstrating precautions taken. Requirements for the submission are given in FIA-F1-DOC-001.

w. FW Primary Flap and FW Secondary Flap may only be in a State of Deployment when the car is stationary or fully inside an *Activation Zone* as defined by Article B7.1.1 (d).

C3.10.11 Front Wing Auxiliary Components

Once Front Wing Assembly has been fully defined, the following "**Front Wing Auxiliary Components**", which, unless otherwise stated, are exempt from Article C3.2.4, may be fitted:

a. In order to ensure the necessary level of sealing, up to four sets of "**Front Wing Fishplates**", each of which must:

   i. lie in its entirety within 3mm of a Primary or Secondary Rotation Surface.

   ~~ii. not exceed the size necessary to allow 20mm of overlap between their adjustable and non-adjustable parts, throughout the range of deviation defined in C3.10.10 (l).~~

   ii. for adjustment of Front Wing Profiles not controlled by the FIA Standard ECU, not exceed the size necessary to allow 20mm of overlap between their adjustable and non-adjustable parts throughout their permitted range of travel.

   iii. for adjustment of Front Wing Profiles controlled by the FIA Standard ECU, not exceed the size necessary to allow 20mm of overlap between their adjustable and non-adjustable parts in Corner Mode.

b. Up to eight Hangers, each of which must comply with C3.2.4 (a) and:

   i. intersect two adjacent volumes of Front Wing Profiles.

©2026 Fédération Internationale de l'Automobile

ii. be no closer than 150mm to any other Hanger that intersects the same two volumes of Front Wing Profiles.

iii. lie in its entirety within RV-FW-PROFILES in Corner Mode.

c. Up to three "**Front Wing Rotation Brackets"**, for each of FW Primary Flap and FW Secondary Flap, each of which must:

i. lie in its entirety within an individual, freely positioned instance of RV-HANGER.

ii. intersect either the Primary Axis or the Secondary Axis.

iii. lie in its entirety within RV-FW-PROFILES in Corner Mode.

d. A single "**FW SM CL Fairing"**, which must comply with Article C3.2.4 and:

i. lie in its entirety within RV-FW-SM-CL-FAIRING.

ii. have up to two sections in any Y-Plane.

e. A single "**FW SM Mid Fairing"**, that may only be fitted to enclose the actuator defined in Article C3.10.10 (p), and must:

i. lie in its entirety within both an axis aligned cuboid of the following dimensions [X, Y, Z] = [250, 50, 100] and RV-FW-SM-MID.

ii. comply with Article C3.2.4.

iii. be no less than 25mm thick (being the minimum distance when measured normal to the surface).

iv. contain no radius of curvature less than 5mm.

f. A single "**FW SM MID Pillar"**, that may only be fitted alongside FW SM Mid Fairing, and must:

i. lie in its entirety within both an axis aligned cuboid of the following dimensions [X, Y, Z] = [250, 50, 100] and RV-FW-SM-MID.

ii. comply with Article C3.2.4.

iii. be arranged such that it is not visible from above with FW SM Mid Fairing in place.

g. A single "**FW SM Linkage"** which must:

i. lie in its entirety within an individual, freely positioned instance of RV-FW-SM-LINKAGE.

ii. intersect both Front Wing Profiles and one of Nose or FW SM Mid Fairing.

iii. if inboard of Y = 200, be fully obscured from above with Nose present.

h. A single **"Front Wing Adjuster Fairing"** which must:

i. lie in its entirety within an individual, freely positioned instance of RV-FW-ADJUSTER.

ii. intersect for the entire range of adjustment, the adjustable part of Front Wing Profiles not controlled by the FIA Standard ECU and the part of Front Wing Profiles that is either stationary or controlled by the FIA Standard ECU.

i. A single **"Tyre Temperature Fairing"** which must:

©2026 Fédération Internationale de l'Automobile

i. lie in its entirety within an individual, freely positioned instance of RV-FW-SENSOR.

ii. intersect either Front Wing Profiles or Front Wing Endplate.

iii. lie in its entirety below Z = 350.

iv. fully enclose a right circular cylinder of diameter 20mm and length 30mm.

Furthermore, once all Front Wing Auxiliary Components have been defined:

j. they must be Trimmed and Combined with themselves, Front Wing Assembly or Nose.

k. a Fillet Radius no greater than 10mm, may be applied along the intersection between FW SM CL Fairing and Nose. Fillet radii, no greater than 4mm, may be applied along the intersections between any Front Wing Auxiliary Component and Front Wing Assembly.

l. the total of Hangers plus Front Wing Rotation Brackets fitted to Front Wing Assembly must not exceed ten.

m. except for FW SM CL Fairing and Front Wing Fishplates, the Front Wing Auxiliary Components must be arranged such that they are not visible from below with Front Wing Assembly in place.

n. flexible seals may be fitted between the adjustable and non-adjustable parts of Front Wing Assembly, and Front Wing Fishplates~~, covering the full range of deviation defined in Article C3.10.10.l~~.

o. Hangers and Front Wing Rotation Brackets fitted to Front Wing Assembly must lie in their entirety inboard of Front Wing Endplate Body.

C3.10.12 Front Wing Bodywork Group

Once the components defined in Articles C3.10.1 to C3.10.11 have been constructed in accordance with these provisions, including any subassembly operations, the resulting union is defined as **"Front Wing Bodywork"**.

C3.11 Rear Wing (RW)

C3.11.1 Rear Wing Profiles

"Rear Wing Profiles" Bodywork must:

a. lie in its entirety within RV-RW-PROFILES.

b. comprise of up to three, non-intersecting, simply connected volumes.

c. when assessing each volume independently, contain no more than two sections in any Z-Plane and a single section in any X and Y -Plane.

d. in any Y-Plane, within 40mm of the rearmost point of the forwardmost section, a line tangent to any part of the section visible from below, must not form an angle greater than 10 degrees when measured against the X-axis.

e. in any Y-Plane, contain:

i. no concave radius of curvature visible from below.

ii. no concave radius of curvature less than 100mm visible from above.

iii. no concave radius of curvature less than 100mm on the rearmost section only.

Furthermore:

f. when measured against a Y-Plane, contain no normal to any point on the surface that subtends an angle greater than 20°, or greater than 45° for the region within RV-RW-NOTCH. For volumes thicker than 0.5mm in their entirety (measured normal to the surface on any Y-Plane), compliance with this Article may be determined prior to application of any Edge Radii necessary to demonstrate compliance with C3.3.1 (a).

   i. compliance with (f) is not required for surfaces that lie exactly on Y = 0 or Y= 575.

g. at all points along the span, the minimum distance between adjacent Rear Wing Profiles volumes must be between 8mm and 12mm and will be measured with a spherical gauge.

Once the Rear Wing Profiles bodywork is fully defined, a Gurney of up to 10mm may be fitted to the trailing edge of the upper surface of the rearmost section. This Gurney is considered part of the Rear Wing Profiles and must satisfy the provisions of this Article except for (c), (e) and (f).

C3.11.2 Rear Wing Endplate Body

"Rear Wing Endplate Body" Bodywork must:

a. lie in its entirety within RV-RWEP-BODY.

b. have up to two sections in any Y-Plane

c. when viewed from the side, fully obscure RS-RWEP.

Rear Wing Endplate Body Aerodynamic Surfaces must:

d. contain no concave radius of curvature less than 100mm.

C3.11.3 Rear Wing Brace

"Rear Wing Brace" Bodywork must:

a. lie in its entirety within:

   i. an axis aligned cuboid of the following dimensions [X, Y, Z] = [100, 375, 40].

   ii. RV-RW-BRACE.

b. in any Y Plane:

   i. have at least one axis of symmetry where the larger one will be called the 'major axis'.

   ii. have no dimension which exceeds 5mm larger than the major axis.

c. contain no concave radius of curvature less than 100mm.

C3.11.4 Rear Wing Pylon

"Rear Wing Pylon" Bodywork must:

a. lie in its entirety within RV-RW-PYLON.

b. in any Z-Plane:

©2026 Fédération Internationale de l'Automobile

i. have a total area no greater than 5000 mm^2, except for regions within 30mm of Exhaust Tailpipe.

ii. have a section thickness less than 25mm when measured in the Y direction, except for regions inside of RV-TAILPIPE.

Furthermore:

c. no part of Rear Wing Profiles may be obscured by Rear Wing Pylon when viewed from above.

C3.11.5 Rear Wing Assembly

"Rear Wing Assembly" results from the Trim and Combination of the following components:

a. Rear Wing Profiles.

b. Rear Wing Endplate Body.

c. Rear Wing Brace.

d. Rear Wing Pylon.

Before trimming is applied, any Rear Wing Profiles and Rear Wing Brace remaining outboard of Rear Wing Endplate Body must be discarded.

A Fillet Radius, no greater than 10mm, may be applied along the intersections between the remaining component parts.

Once fully defined, Rear Wing Assembly must:

e. be a single volume, with no overlapping regions.

C3.11.6 Rear Wing Adjuster System

The **"Rear Wing Adjuster System"** is defined as follows:

a. "**RW Flap"** is constructed solely from Rear Wing Profiles and must:

i. exclude all the forwardmost volume.

ii. exclude all remaining volumes outboard of Y = 535.

iii. include all remaining volumes inboard of Y = 530.

iv. include any fitted Gurney and any parts of Rear Wing Auxiliary Components that are rigidly attached to any included volumes.

b. Adjustment of RW Flap is about a fixed axis of rotation, which must be aligned with the Y-Axis. Furthermore, in Corner Mode, the axis of rotation must:

i. lie within RV-RW-PROFILES.

ii. at Y = 50, lie between the rearmost point and the mid-point of RW Flap, measured in the X-direction.

iii. between Y = 50 and Y = 530, when viewed from below, be fully obscured by RW Flap.

Any adjustment of RW Flap may only be controlled by the FIA Standard ECU and must:

c. when commanded, switch to one of two fixed positions defined as follows:

©2026 Fédération Internationale de l'Automobile

i. a **"Corner Mode"** position, that exactly conforms to the position of Rear Wing Profiles defined in Article C3.11.1 and that remains identical following any Straight Mode operation to its position beforehand.

ii. a **"Straight Mode"** position that, when compared to the Corner Mode position, results in a decrease in incidence of RW Flap. Furthermore, the magnitude of decrease must always remain identical.

d. have a maximum transition time between the two fixed positions that does not exceed 300ms ~~400ms~~, measured from the instant at which the command to change mode is issued by the FIA Standard ECU until the position sensor, connected to the FIA Standard ECU, confirms that the commanded fixed position has been reached.

e. be driven by a single actuator.

f. be measured by a position sensor which:

i. is mechanically linked to the RW Flap.

ii. outputs analogue signals calibrated over the actuator travel.

iii. is connected to the FIA Standard ECU as specified by the FIA.

Furthermore:

g. Any adjustment of RW Flap must maintain:

i. the geometric relationship between all parts of RW Flap.

ii. compliance with all bodywork regulations except C3.2.4 (b), C3.4.4 (a) and (c), ~~Article~~ C3.11.1 and C3.11.7.

h. Except for a failure of the Rear Wing Adjuster System, or during the transition between Corner Mode and Straight Mode, RW Flap can only have the two positions defined in (c).

i. The design ~~is such that~~ must consider failure modes of the system that will ~~result in~~ prevent the RW Flap returning to its Corner Mode position and minimises these risks. Teams must submit documents demonstrating precautions taken. Requirements for the submission are given in FIA-F1-DOC-001.

j. RW Flap may only be in a State of Deployment when the car is stationary or fully inside an *Activation Zone* as defined by Article B7.1.1 (d).

k. Physical stops must be provided to prevent RW Flap from being rotated beyond these limits.

C3.11.7 Rear Wing Auxiliary Components

Once Rear Wing Assembly has been fully defined, the following **"Rear Wing Auxiliary Components"**, which are exempt from Article C3.2.4, may be fitted:

a. When RW Flap has two volumes, up to ~~four~~ eight Hangers, across both sides of the car, each of which must comply with C3.2.4 (a) and:

i. intersect both volumes of RW Flap.

ii. be no closer than 140mm to any other Hanger.

©2026 Fédération Internationale de l'Automobile

iii. lie in its entirety within RV-RW-PROFILES when RW Flap is in Corner Mode.

b. However, between three and five pairs of **"Rear Wing Separators"** must be fitted across both sides of the car. Each pair must:

i. lie in its entirety within an individual, freely positioned instance of RV-RW-SEPARATOR.

ii. intersect both the forwardmost volume of Rear Wing Profiles and RW Flap.

iii. be no closer than 200mm to any other Rear Wing Separator.

iv. be designed and arranged such that the relationship between volumes of Rear Wing Profiles can only change whilst the car is in motion in accordance to Article C3.11.6.

v. be aligned to provide a bearing across at least $40mm^2$ when the distance between Rear Wing Profiles and RW Flap is at its closest position.

c. A single **"Rear Wing SM Adjuster Fairing"**, across both sides of the car, which must lie in its entirety within RV-RW-SM-FAIRING.

d. Up to three **"Rear Wing Rotation Brackets"**, across both sides of the car, where each must:

i. lie in its entirety within an individual, freely positioned instance of RV-RW-BRACKET.

ii. lie in its entirety, either inboard of Y = 20 or outboard of Y = 520.

iii. if outboard of Y = 520, intersect both the fixed volumes of Rear Wing Profiles and RW Flap for the entire range of adjustment.

iv. lie in its entirety within RV-RW-PROFILES when RW Flap is in Corner Mode.

e. A single "Rear Wing Pylon Brace", across both sides of the car, which must:

i. lie in its entirety between Z = 400 and Z = 590 and forward of X_R = 390.

ii. not be visible from the side with the Rear Wing Pylons present.

iii. in any Y Plane, have at least one axis of symmetry where the larger one will be called the 'major axis' and must be less than 100mm in length.

iv. in any Y Plane, have no dimension which exceeds 5mm larger than the major axis.

v. in any Y Plane, be no more than 25mm thick, measured normal to the major axis.

Furthermore, once all Rear Wing Auxiliary Components have been defined:

f. they must be Trimmed and Combined with Rear Wing Assembly.

g. a Fillet Radius no greater than 10mm, may be applied along the intersection between Rear Wing SM Adjuster Fairing and Rear Wing Assembly, and Rear Wing Pylon Brace and Rear Wing Assembly. Fillet Radii, no greater than 4mm, may be applied along all remaining intersections with Rear Wing Assembly.

h. they, except for the Rear Wing Pylon Brace, must be arranged such that they are not visible from below with Rear Wing Assembly in place.

i. flexible seals may be fitted between the adjustable and non-adjustable parts of Rear Wing Assembly and Rear Wing Rotation Brackets, for sealing gaps between these components whilst in Corner Mode.

C3.11.8 Rear Wing Bodywork Group

Once the components defined in Articles C3.11.1 to C3.11.7 have been constructed in accordance with these provisions, including any sub-assembly operations, the resulting union is defined as **"Rear Wing Bodywork"**.

C3.12 Final Assembly

Prior to **"Final Assembly"**, all bodywork groups described in these Articles must be fully defined. Furthermore, each proceeding Final Assembly sub-section must be complete before moving onto the next.

C3.12.1 Front Bodywork to Rear Bodywork Assembly

The Front Bodywork and the Rear Bodywork must be trimmed to each other. The result of this assembly will be known as **"Upper Bodywork"**. A Fillet Radius, no greater than 50mm, may be applied along the intersections between these volumes.

C3.12.2 Upper Bodywork to Floor Bodywork Assembly

The Upper Bodywork and Floor Bodywork must be trimmed to each other. Furthermore:

a. before trimming, any Engine Cover remaining below the Floor Bodywork must be discarded.

b. the intersection formed by any remaining Upper Bodywork regions and Floor Bodywork must produce no more than one curve.

c. a Fillet Radius, no greater than 50mm, may be applied along the intersection between these volumes.

d. once all volumes are trimmed and filleted, no part of Engine Cover, the Fillet Radius between Engine Cover and Floor Bodywork, may be visible from below.

C3.12.3 Tail Bodywork to Floor and Upper Bodywork Assembly

The Tail and the Upper Bodywork to Floor Assembly must be trimmed to each other. A Fillet Radius, no greater than 25mm, may be applied along the intersections between these volumes.

C3.12.4 Front Wing Bodywork to Nose Bodywork Assembly

The Front Wing Bodywork and the Nose bodywork must be trimmed to each other. Furthermore:

a. a Fillet Radius, no greater than 25mm, may be applied along the intersections between these volumes.

b. except for Front Wing Pylon, FW SM Linkage and FW SM CL Fairing, no part of Front Wing Bodywork may intersect Nose bodywork.

C3.12.5 Rear Wing Bodywork to Tail Bodywork Assembly

The Rear Wing Bodywork and the Tail Bodywork must be trimmed to each other. A Fillet Radius, no greater than 10mm, may be applied along the intersections between these volumes.

©2026 Fédération Internationale de l'Automobile

C3.13 Bodywork not defined in Articles C3.5 to C3.12

In addition to the Bodywork defined and regulated by Articles C3.5 to C3.12, the following components are permitted:

C3.13.1 A transparent windscreen, that measures less than 30mm in Z, less than 300mm in Y, and is no more than 3mm thick, may be fixed to the forward face of the Cockpit opening and may extend above RV-CH-MID.

C3.13.2 Antennae and pitot tubes may be mounted on the upper surface of the Survival Cell ahead of the Cockpit opening and may extend above RV-BODY-FRONT.

C3.13.3 A fairing may be attached to the Secondary Roll Structure, or the cameras defined in Articles C8.9.3 and C8.16.6. This fairing:

a. must lie in RV-HALO.

b. must contain no convex radius less than 2mm.

c. may be joined to Front Bodywork with a Fillet Radius no greater than 10mm.

C3.13.4 Ducts (as specified in C3.1.a.ii and C3.1.a.iii) and Primary Heat Exchangers, which must not be visible when viewed from the outside of the car, at any angle perpendicular to the X-axis. This is assessed with the bodywork defined in Articles C3.5 to C3.12 present but prior to the application of Apertures permitted in Articles C3.16.

C3.13.5 A slip sensor and its fairing may be mounted underneath the Forward Chassis provided it lies within RV-SLIP. The surface of the combined slip sensor and fairings in contact with the External Air Stream must form a single curve when intersected by any Z plane.

C3.14 Wheel Components

C3.14.1 General Principles

The following principles apply throughout Articles C3.14 and C3.15.

a. Any Bodywork subject to Wheel Bodywork Assembly as per Article C3.15 must first be classified under one of the groups specified in Article C3.14.

b. Unless otherwise specified, all Bodywork in Article C3.14 must be present and fitted after Wheel Bodywork Assembly as per Article C3.15.

c. Compliance of each Bodywork component defined in Article C3.14 and Article C3.15 with Article C3 will be assessed independently and before any Trim and Combination operations and Fillet application described in Article C3.15, and any Aperture application described in Article C3.16.

d. Compliance of the Aerodynamic Surfaces of each Bodywork component in Article C3.14 will be assessed independently and after their boundaries have been defined by Trim and Combination operations and Fillet application described in Article C3.15, and before any Aperture application described in Article C3.16.

e. When referred to individually, Wheel Components will have the words “Front” or “Rear” prefixed to the Component name.

©2026 Fédération Internationale de l’Automobile

f. The Wheel Component name on its own refers to both the Front and Rear Components simultaneously.

Furthermore, except for permitted Aerodynamic Seals, Wheel Bodywork must:

g. be rigid and rigidly secured to the suspension uprights.

h. not be rigidly secured to the suspension members.

Rigidly secured means not having any degree of freedom.

C3.14.2 Drum

"Front Drum" and **"Rear Drum"** Bodywork, the latter being exempt from Article C3.2.4 (b), must:

a. be made to the geometry defined by RS-FWH-DRUM and RS-RWH-DRUM respectively.

Furthermore:

b. Drum Bodywork must be fitted with an Aerodynamic Seal, in the outboard of the two annotated volumes, between the Drum and the axle. This Aerodynamic Seal must be circumferential, continuous (around an arc of 360°), concentric about the Y_W axis, and uniform.

c. Drum Bodywork may be fitted with a flexible seal or seals, in the inboard of the two annotated volumes, between the Drum and the Wheel Rim.

C3.14.3 Lip

"Front Lip" and **"Rear Lip"** Bodywork must:

a. lie in their entirety within RV-FWH-LIP and RV-RWH-LIP respectively.

b. have up to two sections in any X_W and Y_W-Plane.

c. be fully visible from either inboard or outboard, such that any surface obscured from one direction is visible from the other.

Furthermore:

d. Front Lip Bodywork is optionally fitted and exempt from Article C3.14.1 (b).

e. Rear Lip Bodywork must have up to two sections in any Z_W-Plane below $Z_W = -170$.

f. compliance with (c) is not required within regions obscured by RS-RWH-DRUM when viewed from outboard.

Lip Aerodynamic Surfaces must:

g. contain no concave radius of curvature less than 20mm.

h. contain no convex radius of curvature less than 20mm.

Furthermore:

i. compliance with (h) is not required within 10mm of the side-view boundary of the Lip when viewed from inboard or outboard.

j. compliance with (g) and (h) is not required on the Rear Lip within a single transition between one and two Z_W sections that is contained within two Z_W-Planes up to 10mm apart.

©2026 Fédération Internationale de l'Automobile

C3.14.4 Scoop

The "**Front Scoop**" and "**Rear Scoop**" Bodywork must:

a. lie in their entirety within RV-FWH-SCO and RV-RWH-SCO respectively.

Furthermore, Rear Scoop Bodywork rearwards of $X_W = 0$:

b. is exempt from Article C3.2.4 (b).

Scoop Aerodynamic Surfaces must:

c. be fully visible from inboard.

d. contain no radius of curvature less than 20mm, except for regions of the Rear Scoop rearwards of $X_W = 0$.

C3.14.5 Rear Drum Deflector

"Rear Drum Deflector" Bodywork must:

a. lie in its entirety within RV-RWH-FDEF.

b. have up to two sections in any X_W, Y_W and Z_W-Plane below $Z_W = -170$.

c. in any Z_W-Plane:

   i. the rearmost section must contain at least two points 50mm apart.

   ii. within 50mm of the rearmost point of the section, a line tangent to any part of the section visible from inboard must not form an angle greater than 5 degrees when measured against the X_W-axis.

Furthermore:

d. Rear Drum Deflector Bodywork is optionally fitted and exempt from Article C3.14.1 (b).

Rear Drum Deflector Aerodynamic Surfaces must:

e. contain no concave radius of curvature less than 50mm.

Furthermore:

f. compliance with (e) is not required within a single transition between one and two Z_W sections that is contained within two Z_W-Planes up to 10mm apart.

C3.14.6 Front Drum Front Deflector

"Front Drum Front Deflector" Bodywork, if present, must:

a. lie in its entirety:

   i. within an axis aligned cuboid of the following dimensions $[X_W, Y_W, Z_W] = [150, 45, 25]$, which may be freely translated along any axis, and rotated about the Y_W axis only.

   ii. below $Z_W = 0$.

b. comprise of up to two, non-intersecting, simply connected volumes.

c. have up to two sections in any X_W, Y_W or Z_W-Plane.

©2026 Fédération Internationale de l'Automobile

d. not be visible from inboard with the Front Lip present.

Furthermore,

e. Front Drum Front Deflector Bodywork is optionally fitted and exempt from Article C3.14.1 (b).

C3.14.7 Front Drum Rear Deflector

"Front Drum Rear Deflector" Bodywork, which is exempt from Article C3.2.4, results from the Trim and Combination of the following components:

a. RS-FWH-RDEF.

b. Deflector Leading Edge, which must:

   i. lie in its entirety within RV-FWH-RDEF.

   ii. contain no more than a single section in any X_W and Z_W-Plane.

   iii. obscure RS-FWH-TOP when viewed from inboard.

Front Drum Rear Deflector Bodywork must:

c. be no more than 15mm thick (being the minimum distance when measured normal to the surface), if visible from inboard.

Furthermore:

d. Compliance with (c) is not required within 5mm of the side-view boundary of **Front Drum Rear Deflector** when viewed from inboard.

Front Drum Rear Deflector Aerodynamic Surfaces must:

e. in any X_W-Plane forward of X_W = 150, contain no concave radius of curvature:

   i. less than 75mm visible from outboard.

   ii. visible from inboard.

f. in any X_W-Plane rearward of X_W = 150, contain no concave radius of curvature less than 50mm.

C3.14.8 Drum Deflector Stay

Up to three "**Front Drum Deflector Stays"** may be present, each of which must:

a. lie in its entirety within a right circular cylinder of diameter no greater than 20mm.

b. lie no closer than 20mm to any other Front Drum Deflector Stay.

c. in any plane normal to the axis of the right circular cylinder defined in (a), have at least one axis of symmetry.

"Rear Drum Deflector Stay" Bodywork may be present, but must:

d. lie in its entirety within both:

   i. RV-RWH-STAY.

   ii. an axis aligned cuboid of dimensions [X_W, Y_W, Z_W] = [90, 150, 25], which may be freely translated along any axis, and rotated about the Y_W axis only.

©2026 Fédération Internationale de l'Automobile

e. in any Y_W-Plane:

i. have at least one axis of symmetry where the larger one will be called the 'major axis'.

ii. have no dimension which exceeds 5mm larger than the major axis.

Furthermore, all Drum Deflector Stay Bodywork:

f. is optionally fitted and exempt from Article C3.14.1 (b).

C3.14.9 Wheel Auxiliary Components

The following "**Wheel Auxiliary Components**", which are optional and exempt from Article C3.14.1 (b), may be fitted:

a. Up to three Hangers, each of which must:

i. intersect the Front Lip and the union of Front Drum and Front Scoop.

ii. be no closer than 100mm to any other Hanger.

iii. not be visible from inboard with the Front Drum, Front Lip and Front Scoop present.

iv. in any Y_W-Plane, have at least one axis of symmetry where the larger one will be called the 'major axis'.

v. in any Y_W-Plane, have no dimension which exceeds 2mm larger than the major axis.

b. To protect the Scoop inlet from debris ingestion, a "**Front Debris Guard**" and "**Rear Debris Guard**", which are exempt from Article C3.2.4, must:

i. lie in their entirety within RV-FWH-SCO and the union of RV-RWH-SCO and RV-RWH-LIP respectively.

ii. when assessing each Debris Guard individually, form one or more sections, each with a cross-sectional area no greater than $8mm^2$ when intersected by any Yw-plane.

C3.15 Wheel Bodywork Assembly

Prior to "**Wheel Bodywork Assembly**", all Bodywork components described in Article C3.14 must be fully defined. Furthermore, each proceeding Wheel Bodywork Assembly sub-section must be completed before moving on to the next.

C3.15.1 Scoop to Drum

"Scooped Drum" Bodywork results from the Trim and Combination of the respective Drum and Scoop. A Fillet Radius no greater than 20mm may be applied at the intersection between these volumes.

C3.15.2 Lip to Scooped Drum

"Outboard Wheel" Bodywork results from the Trim and Combination of the Scooped Drum and Lip components. A Fillet Radius no greater than 20mm may be applied at the intersection between these volumes. If Front Scooped Drum and Front Lip do not intersect, Front Outboard Wheel must be considered as the non-intersecting assembly of these components and not the result of a Trim and Combination.

Furthermore:

©2026 Fédération Internationale de l'Automobile

a. if present, the Front Drum Front Deflector, defined in Article C3.14.6, must be Trimmed and Combined to the Front Outboard Wheel. Fillet Radii no greater than 5mm may be applied at the intersections between these volumes.

b. if present, the Hangers, defined in Article C3.14.9 (a), must be Trimmed and Combined to the Front Outboard Wheel. Fillet Radii no greater than 4mm may be applied at the intersections between these volumes.

c. if present, the Debris Guard, defined in Article C3.14.9 (b), must be Trimmed and Combined to the Outboard Wheel. Fillet Radii no greater than 4mm may be applied at the intersections between these volumes.

C3.15.3 Rear Drum Deflector to Rear Outboard Wheel

The Rear Outboard Wheel, Rear Drum Deflector and Rear Drum Deflector Stay, if present, must be Trimmed and Combined to each other and Fillet Radii no greater than 10mm may be applied at the intersections between these volumes.

After trimming, Rear Drum Deflector Stay, if present, must not be visible from inboard or outboard.

The result of this union will be known as "**Rear Wheel Bodywork Assembly"**, which must form a single, simply connected volume with the Debris Guards removed.

C3.15.4 Front Drum Rear Deflector to Front Outboard Wheel

Each Front Drum Deflector Stay, if present, must be Trimmed and Combined to both the Front Outboard Wheel and Front Drum Rear Deflector and a Fillet Radius no greater than 10mm may be applied at the intersections between these volumes.

After trimming, Front Drum Deflector Stay, if present, must not be visible from inboard.

The result of this union will be known as Front Wheel Bodywork Assembly.

C3.15.5 Internal Cooling Ducts

"Internal Cooling Ducts" are exempt from Article C3.2.4, but must lie in their entirety within Scooped Drum. Once the Apertures in Article C3.16 have been applied, any flow linking the Scoop Inlet to the Scoop Outlet must:

a. pass through the plane Y_W = -50, except for ducts that cool electrical components.

Furthermore, any flow which enters the Scooped Drum must:

b. not have any resultant flux across a circular section 155mm in diameter with its centre lying on the Y_W axis in the plane Y_W = -182 and Y_W = -211 for the Front and Rear respectively.

C3.16 Apertures

Once the Final Assembly and Wheel Bodywork Assembly have been fully defined, the apertures listed in the following table may be applied. **"Apertures"** shall be interpreted as mathematical surfaces bound by their peripheries and can only be defined after their respective Reference Volume has been translated and rotated. Unless otherwise stated, each aperture may only be applied once, and must:

©2026 Fédération Internationale de l'Automobile

a. lie in its entirety within the stated Aperture RV. Unless otherwise stated, each individual **"Aperture RV"**:

   i. is an axis aligned cuboid that is bounded by a single internal diagonal extending from [0,0,0] to the stated co-ordinates.

   ii. may be freely translated in space.

   iii. may be rotated about [0, 0, 0] within the prescribed limits. [X° Limit, Y° Limit, Z° Limit]. Any rotation must be applied before any translation.

   All Aperture RVs are referenced to the Car Coordinate System except for the Wheel Bodywork Aperture RVs which are referenced to the Wheel Coordinate System.

b. be a simply connected surface.

c. be fully coincident with the surface of the stated Bodywork component and any permitted Fillet or Edge Radius applied to the stated Bodywork component.

d. have a surface area no greater than the stated area, per side of the car.

e. unless otherwise stated, and with only the corresponding Bodywork group and Fillet or Edge Radius defined in (c) present, be fully visible from the given direction , with the Aperture surface assumed to be non-transparent.

f. respect all other stated criteria.

g. not overlap any other Aperture, except for C3.16.15.

h. except for regions of zero or incidental flow, which the FIA may request be demonstrated, only result in flux through the Aperture in the stated direction, when considered relative to the Bodywork. Furthermore, if no direction is stated, the flux direction will not be assessed.

	(c)	(a.i) / (a.iii)	(d)	(e)	(f)	(h)
C3.16.1 Nose	Nose	[15, 40, 20] [0°, ±10°, 0°]	750	Front	i. Must lie in its entirety forward of $X_F = -1100$.	Influx
C3.16.2 Driver Cooling	Driver Cooling	[20, 100, 20] [0°, ±10°, 0°]	1500	Front		Influx
C3.16.3 FW SM Actuator	Front Wing Bodywork or Nose	[30, 30, 120] [±10°, ±25°, ±10°]	see limb. (f) (i).	None	i. Must not exceed the size necessary to accommodate a 10mm offset of the Swept Bounding Volume of FW SM Linkage across the combined range of deviation defined in C3.10.10 (l) and (n). ii. May be fitted with a flexible seal that does not exceed the minimum size necessary to fully close the Aperture. iii. Up to two instances of this aperture are permitted.	
C3.16.4 FW Adjuster	Front Wing Bodywork or Nose	[20, 20, 20] [0°, 0°, 0°]	200	None	i. Up to two instances of this aperture are permitted.	

	(c)	(a.i) / (a.iii)	(d)	(e)	(f)	(h)
C3.16.5 FSU IB	Nose and Forward Chassis	[90, 10, 30] [0°, ±10°, ±10°]	2500	Side	i. Up to two apertures (one each for push/pullrod and trackrod) are permitted. ii. No point on the aperture may be more than 100mm from any other point.	
C3.16.6 F-Scoop Inlet	Front Scoop	[50, ~~125~~ 155, 200] [0°, 0°, 0°]	~~15,000~~ 18,000	None	i. Except for minimal incidental leakage, all air which enters the Front Scoop Inlet must exit the Front Scoop Outlet.	Influx
C3.16.7 F-Scoop Outlet	Front Scoop	[75, ~~125~~ 155, 200] [0°, 0°, 0°]	~~15,000~~ 18,000	Rear	i. Must lie in its entirety rearward of $X_W = 100$ and above $Z_W = -50$ and no closer than 180mm from the Y_W axis. ii. Except for minimal incidental leakage, only air which has entered the Front Scoop Inlet shall exit the Front Scoop Outlet.	Efflux
C3.16.8 Floor Auxiliary	Floor Bodywork	[10, 80, 80] [0°, ±20°, 0°]	1500	Front	i. Must lie in its entirety above Z = 100 and forward of $X_F = 950$.	Influx
C3.16.9 Sidepod Inlet	Sidepod	[20, 475, 250] [0°, ±80°, ±35°]	80,000	Front	i. Must lie in its entirety above Z = 275.	Influx
C3.16.10 Cockpit Entry	Chassis Mid	[850, 200, 200] [0°, 0°, 0°]	175,000	Above	i. Visibility must be assessed with the Secondary Roll Structure removed.	
C3.16.11 EC Louvre Cooling	Engine Cover	RV-BW-APERTURE [0°, 0°, 0°]	150,000	None	i. RS-BW-APERTURE must be fully obscured when viewed through the aperture from above. ii. when viewed from the outside of the car, at any angle perpendicular to the X-Axis, any visible exposed surfaces must lie in their entirety within 50mm of the untrimmed surface. iii. Must not be translated.	Efflux
C3.16.12 EC Y25 Cooling	Engine Cover	[1200, 25, 50] [0°, ±20°, 0°]	30 000	Above	i. Must lie in its entirety inboard of Y = 25. ii. After the aperture has been applied, RS-EC must remain fully obscured when viewed from the side.	Efflux
C3.16.13 EC Rocket	Engine Cover	[10, 300, 350] [0°, 0°, 0°]	100,000	Rear	i. Must lie in its entirety rearward of $X_R = -55$. ii. May consist of up to two apertures per side of the car, where the total area of both apertures must still respect (d) and both apertures must lie within a single instance of the RV.	Efflux
C3.16.14 R-Tyre Sensor	Floor Bodywork or Engine Cover	[5, 60, 30] [0°, ±75°, ±75°]	1500	None	i. Must be fully obscured from below with Floor Body present. ii. Must be arranged such that the infra-red sensor has an uninterrupted line of sight to the rear tyre.	
C3.16.15 RSU IB	Engine Cover	[200, 50, 140] [±90°, 0°, ±90°]	12 000	None	i. A single aperture is permitted for each suspension member and driveshaft provided the suspension member, driveshaft or its respective fairing intersects the Engine Cover Bodywork at Legality Setup. ii. No point on the aperture may be more than 200mm from any other point.	Efflux

©2026 Fédération Internationale de l'Automobile

	(c)	(a.i) / (a.iii)	(d)	(e)	(f)	(h)
					iii. At Legality Setup the Aperture must enclose any parts of the suspension member or driveshaft or their respective fairings (if fitted) that lie forward of $X_R = -55$.	
C3.16.16 R-Scoop Inlet	Rear Scoop	[50, 100, 175] [0°, 0°, 0°]	10,000	None	i. Except for minimal incidental leakage, all air which enters the Rear Scoop Inlet must exit the Rear Scoop Outlet.	Influx
C3.16.17 R-Scoop Outlet	Rear Scoop	[150, 100, 175] [0°, 0°, 0°]	10,000	Rear	i. Must lie in its entirety rearward of $X_W = 100$ and above $Z_W = -50$. ii. Except for minimal incidental leakage, only air which has entered the Rear Scoop Inlet shall exit the Rear Scoop Outlet.	Efflux
C3.16.18 RIS Outlet	Tail	[15, 60, 170] [0°, 0°, 0°]	3250	Rear	i. The RV must lie with its rearmost face at $X_{DIF} = 760$, upper edge at Z = 380 and inner edge at Y = 0. ii. Is exempt from C3.16 (b).	Efflux
C3.16.19 RIS Light	Tail	[35, 30, 10] [0°, ±20°, 0°]	1000	Below	i. Must lie in its entirety behind $X_{DIF} = 350$ for the purpose of cooling RIS mounted electronics.	Influx
C3.16.20 Cockpit Cooling	Forward Chassis	[100, 100, 10] [0°, ±10°, 0°]	3000	Below	i. Must lie in its entirety between $X_A 300 < X < X_C - 950$. ii. All air entering the aperture must exit into the Survival Cell.	Influx

C3.17 Suspension and Driveshaft Fairings

C3.17.1 **"Suspension Fairings"** must be fitted to all suspension members defined in Article C10.3.6, except for those of circular cross section. Furthermore, Suspension Fairings must be internally sealed to prevent any internal airflow.

C3.17.2 Each Suspension Fairing, relative to its corresponding suspension member, must:

a. fully cover the member and any components mounted to the member, over the span exposed to the External Air Stream.

b. be rigid and have zero degrees of freedom relative to the member. Except for suspension conforming to Article C10.3.3, where minimal deformation or articulation will be allowed in shared cover sections to accommodate nominal misalignment of relevant suspension members through the suspension travel range.

c. lie entirely ahead of $X_R = 300$.

C3.17.3 The surface bounded by the external cross-section of each Suspension Fairing, when taken normal to the corresponding suspension member's load line defined in Article C10.3.6 (a) must:

a. intersect the load line, except for front suspension elements, locally, for the sole purpose of ensuring minimum clearance with the Wheel Rim at full steering lock.

b. have at least one axis of symmetry where the larger one will be called the "major axis.'

c. have no dimension which exceeds:

i. 100mm.

ii. 5mm larger than the major axis.

d. have an aspect ratio no greater than 3.5:1, where aspect ratio is the ratio of the major axis to the maximum thickness, measured in the direction normal to the major axis.

e. have an incidence (defined as the angle between the major axis and the plane Z=0 with the car at its Legality Setup, as defined in Article C10.1) which lies within the following ranges:

i. For Front Suspension Fairings, between 10deg (nose down) and 0deg.

ii For Rear Suspension Fairings, between 10deg (nose down) and –10deg (nose up).

C3.17.4 Suspension Fairings of members which share an attachment point will be considered by a virtual dissection into discrete components. Such fairings will be allowed minimally necessary exceptions to Article C3.17.3 (b), (c.ii), (d) and (e) close to the junction of the suspension members, including minimal cut outs to allow the passage of a suspension member connected inboard to the rockers defined in Article C10.4.1. After application of any such cut out, the resultant fairings must still seal the internal volume of the fairings from the External Air Stream.

C3.17.5 A **"Driveshaft Fairing"** may be fitted around the driveshaft defined in Article C9.10 and must cover the driveshaft and any component mounted to it, over the span exposed to the External Air Stream. Furthermore, this fairing must be internally sealed to prevent any internal airflow.

The surface bounded by the external cross-section of this fairing, when taken normal to a single nominated legality axis which over the driveshaft's length must lie in its entirety within 25mm of the driveshaft, must:

a. respect the criteria of Article C3.17.3 except for:

i. part (a), which must instead intersect the legality axis.

ii. part (c.i), which is increased to 150mm.

iii. part (e), where the range is between 10deg (nose down) and –10deg (nose up).

Furthermore, this fairing must not vary the angle subtended by the major axis of its cross section when taken normal to the legality axis, and the plane Z = 0 by more than ±5deg from that at Legality Setup over the range of suspension movement.

C3.17.6 The angle between the normal to any point of the surface of a Suspension or Driveshaft Fairing and a plane normal to the corresponding suspension member's load line or the driveshaft's legality axis must not exceed 15 degrees. This is except for regions close to the:

a. inner attachment point.

b. outer attachment point.

c. junction between suspension members that share an attachment point.

Treating the Suspension or Driveshaft Fairing as a solid volume bound by its Bodywork surfaces, for fairings thicker than 0.5mm in their entirety (measured normal to the surface), compliance with this Article may be determined prior to application of any Edge Radii necessary to demonstrate compliance with C3.3.1 (a).

C3.17.7 In order to permit suspension travel while maintaining an Aerodynamic Seal, minimal flexible components may be fitted between a Suspension or Driveshaft Fairing and the following components:

a. Wheel Bodywork, as defined in Article C3.15.

b. Front Bodywork, as defined in Article C3.7.

c. Engine Cover Bodywork, as defined in Article C3.8.2.

d. Tail Bodywork, as defined in Article C3.9.

e. Gearbox Case, as defined in Appendix C1.

f. Rear Wing Pylon, as defined in Article C3.11.4.

g. The Suspension Fairing covering the suspension member connected inboard to the rockers defined in Article C10.4.1.

With the car at its Legality Setup, these flexible components must:

h. contain a Fillet Radius of up to 30mm between the components they are sealing.

i. except for the Fillet Radius defined in (h), conform with the shape restrictions of either of the two components they are sealing. For clarity, parts of these components may be replaced with the flexible component.

j. be designed in such way as to maintain their shape integrity with the car in motion, and as much as possible, with the suspension at another position than that of the Legality Setup.

When the suspension is at Legality Setup and the Wheels are in the straight-ahead position, exceptions to (h) and (i) are permitted in regions internal to the volume bounded by the Fillet Radius defined in (h) between:

k. Suspension Fairings and Front Wheel Bodywork.

l. the Front Trackrod Suspension Fairing and Front Bodywork.

C3.17.8 Suspension Fairings may be united with the Driveshaft Fairing to form a solitary fairing. Such a fairing will be considered by a virtual dissection into discrete Suspension or Driveshaft Fairings. Furthermore, the discrete Suspension and Driveshaft Fairings which form the solitary fairing, may have minimally necessary exceptions to Article C3.17.3 (b), (c.ii), (d) and (e), Article C3.17.5 (a.iii) and Article C3.17.6, close to a single junction where these fairings transition from virtually discrete to physically discrete.

C3.18 Aerodynamic Component Flexibility

C3.18.1 Introduction of load/deflection tests

Bodywork subjected to load/deflection tests in this Article must be of rigid construction and exhibit nominally linear elastic behaviour up to the maximum load applied whilst running on track, unless stated otherwise.

Any system, mechanism, or procedure, that achieves, seeks to, or is suspected of, circumventing the tests defined in this Article is prohibited.

©2026 Fédération Internationale de l'Automobile

In order to ensure that the requirements of Article C3.2.2 are respected, the FIA reserves the right to introduce further load/deflection tests, modify existing tests, or require F1 Teams to provide further evidence as stated in Article C1.7, for any part of the bodywork which appears to be, or is suspected of, moving whilst the car is in motion.

Further details about the implementation of each test are given in FIA-F1-DOC-050.

Note: The format of articles C3.18.2 through C3.18.14 has been changed. For clarity, only substantive changes have been highlighted

C3.18.2 Front Wing Bodywork Flexibility

Field	Description
Component	Front Wing Bodywork
Load(s)	a) Symmetric: 1000 N per car side simultaneously b) Asymmetric: 1000 N
Load Direction(s)	[0, 0, −1]
Load Application Point(s)	[X_F=−925, ±525, 300]
Load Application Method	50 mm diameter ram(s) on F1 team-supplied adaptors
Adaptor / Pad Details	350 in X × 100 mm in Y Inner face at Y = ±475 Forward face at X_F = −1100 Top face at Z = 300 Flat top surface, no recesses Mass ≤ 2 kg
Displacement Reference	Survival Cell at X_A = 0
Displacement Direction	Along loading axis
Deflection Limit(s)	a) Symmetric: ≤ ~~15 mm~~ 10mm b) Asymmetric: ≤ ~~20 mm~~ 15mm
Test Conditions	Test a) and b) done separately
Notes	Adaptor must not increase rigidity of the bodywork under test. The adaptor must not be undercut and must contact only non-movable elements of the bodywork.

C3.18.3 Front Wing Flap Flexibility

Field	Description
Component	Front Wing Primary and Secondary Flaps
Load(s)	60 N point load
Load Direction(s)	Normal to flap surface
Load Application Point(s)	Any point ~~on~~ 12.5mm from the trailing edge
Load Application Method	Point load, pad fully on flap surface

©2026 Fédération Internationale de l'Automobile

Adaptor / Pad Details	25 mm diameter rubber pad
Displacement Reference	Forward-most Front Wing profile
Displacement Direction	Along loading axis
Deflection Limit(s)	≤ 10 mm
Test Conditions	Flap in Corner Mode; may be combined with C3.18.2
Notes	N/A

C3.18.4 Front Wing Endplate Flexibility

Field	Description
Component	Front Wing Endplate
Load(s)	60 N
Load Direction(s)	a) [0, 0, −1] b) [0,+1, 0] or [0, -1, 0]
Load Application Point(s)	Anywhere ~~on~~ 12.5mm from the endplate periphery
Load Application Method	Point load, pad fully on endplate surface
Adaptor / Pad Details	25 mm diameter rubber pad, fully on surface
Displacement Reference	Forward-most Front Wing profile at Y = +575 or Y = -575
Displacement Direction	Along loading axis
Deflection Limit(s)	≤ 7 mm
Test Conditions	Test a) and b) done separately
Notes	N/A

C3.18.5 Front Floor Flexibility

Field	Description
Component	Front Floor Bodywork
Load(s)	≤ ~~8000N~~ 6000N
Load Direction(s)	[0, 0, +1]
Load Application Point(s)	25 mm from [X_F=~~500~~ 800, 0, −10]
Load Application Method	10 mm diameter gimbled pad
Adaptor / Pad Details	~~N/A~~ Chassis saddle details in FIA-F1-DOC-050
Displacement Reference	Survival Cell
Displacement Direction	Along loading axis
Load / Deflection Limit(s)	Load envelope to exceed at any deflection given by the straight-line graphs, for load: • Increasing: (0mm,0N), (6mm, ~~6000N~~ 5000N), (25 mm, ~~6000N~~ 5000N)

©2026 Fédération Internationale de l'Automobile

	• Decreasing: (25 mm, ~~6000N~~ 5000N), (~~6.5mm~~ 7mm, ~~6000N~~ 5000N), (~~0.5mm~~ 1mm, 0N)
Test Conditions	N/A
Notes	Test limited to ~~8000N~~ 6000N or 15mm (whichever occurs first), unless otherwise requested by the FIA Load–deflection relationship must be strictly monotonic during loading and unloading

C3.18.6 Outboard Floor Flexibility

Field	Description
Component	Floor bodywork group
Load(s)	a) 500 N per car side simultaneously b) 60 N
Load Direction(s)	[0, 0, −1]
Load Application Point(s)	a) [X_R = −525, Y = ±550] b) Anywhere ~~along~~ 12.5mm from the floor edge
Load Application Method	a) 50 mm diameter ram on F1 team-supplied adaptors b) Pad entirely on the bodywork surface
Adaptor / Pad Details	a) 50 mm diameter adaptors centred on the load axis b) 25 mm diameter rubber pad
Displacement Reference	Rear scrutineering supports defined in C3.3.4
Displacement Direction	Along loading axis
Deflection Limit(s)	a) ≤ 8 mm b) ≤ 7 mm
Test Conditions	Test a) and b) done separately
Notes	N/A

C3.18.7 Central Floor Flexibility

Field	Description
Component	Central Floor Bodywork (RV-PLANK)
Load(s)	a) Up to 6 kN b) Up to 10 kN
Load Direction(s)	[0, 0, +1]
Load Application Point(s)	a) Hole between X_C=−600 and X_C=−800 b) Rear plank hole
Load Application Method	Ram on FIA provided adaptor, centred on the plank holes
Adaptor / Pad Details	Contacting the central floor bodywork with 3 × 10mm diameter pads, equispaced on a 45mm pcd, with a gimbled interface to the loadcell
Displacement Reference	Scrutineering supports defined in C3.3.4
Displacement Direction	Along loading axis

©2026 Fédération Internationale de l'Automobile

Deflection Limit(s)	a) ≥ 3 kN/mm b) ≥ 6 kN/mm
Test Conditions	All rotational orientations of adaptor assembly Test a) and b) done separately
Notes	Stiffness limit must be achieved for any load or displacement

C3.18.8 Floor Board Flexibility

Field	Description
Component	Floor Bodywork
Load(s)	a) 100 N b) 60 N
Load Direction(s)	a) [0, 0, -1] b) [0, +1, 0] or [0, -1, 0]
Load Application Point(s)	a) [X_F, Y] = [695, ±720] b) Bodywork periphery
Load Application Method	a) Hanging weights on F1 team-supplied adaptor b) Point load, pad fully on bodywork surface
Adaptor / Pad Details	a) 25 mm diameter adaptors centred on load axis. Holes to accommodates a 2.3 mm rod to pass through b) 25 mm rubber pad
Displacement Reference	Front scrutineering supports defined in C3.3.4
Displacement Direction	Along loading axis
Deflection Limit(s)	a) ≤ 5 mm b) ≤ 7 mm
Test Conditions	Tests a) and b) performed separately
Notes	All required holes must be sealed on circuit.

C3.18.9 Diffuser Flexibility

Field	Description
Component	a) ~~Diffuser~~ Floor Bodywork b) Floor Winglets
Load(s)	a) 100 N per car side simultaneously b) 60 N
Load Direction(s)	a) [0, 0, -1] b) Normal to surface
Load Application Point(s)	a) 15 mm forward of rear extremity at Y = ±320 or ±215 b) Anywhere
Load Application Method	a) Hanging weights on F1 team-supplied adaptor b) Point load, pad fully on bodywork surface
Adaptor / Pad Details	a) 25 mm diameter adaptors centred on load axis. Holes to accommodates a 2.3 mm rod to pass through b) 25 mm rubber pad

©2026 Fédération Internationale de l'Automobile

Displacement Reference	RIS
Displacement Direction	Along loading axis
Deflection Limit(s)	a) ≤ 5 mm b) ≤ 7 mm
Test Conditions	Tests a) and b) performed separately
Notes	All required holes must be sealed on circuit on both upper and lower surfaces

C3.18.10 Rear Wing Bodywork Flexibility

Field	Description
Component	Rear Wing Profiles
Load(s)	~~[218, 0, −985]~~ 1009N per car side simultaneously
Load Direction(s)	~~As load vector~~ [218, 0, −985]
Load Application Point(s)	[X_R = 390, ±325, 835]
Load Application Method	50 mm diameter rams on F1 team-supplied adaptors
Adaptor / Pad Details	Adaptors must lie between Y = ±[275-375] and X_R = 150-500 Upper surface at Z = 850 with 52 mm counterbore for the ram Must be removable by translation along Z-axis only
Displacement Reference	Displacement: RIS Angular: on the rear wing profiles, at [X_R, Y] [375, ±450] and relative to the RIS
Displacement Direction	Displacement: along loading axis Angular: in Y-plane
Deflection Limit(s)	≤ 6 mm linear ≤ 1.0° angular
Test Conditions	Both sides loaded simultaneously
Notes	N/A

C3.18.11 Rear Wing Flap Flexibility

Field	Description
Component	Rear Wing Flap
Load(s)	500 N
Load Direction(s)	[+1, 0, 0]
Load Application Point(s)	a) [Y, Z] = [Y, 800] with |Y| ≤ 50 b) [Y, Z] = [+300, 800] c) [Y, Z] = [−300, 800]
Load Application Method	Load on F1 team-supplied adaptors
Adaptor / Pad Details	25 mm wide
Displacement Reference	Forward part of Rear Wing Mainplane at same Y

©2026 Fédération Internationale de l'Automobile

Displacement Direction	Along loading axis
Deflection Limit(s)	≤ 7 mm
Test Conditions	One load position at a time
Notes	N/A

C3.18.12 Rear Wing Mainplane Trailing Edge

Field	Description
Component	~~Rear Wing Mainplane Trailing Edge~~ The forward-most aerofoil element of Rear Wing Profiles
Load(s)	200 N
Load Direction(s)	Normal to lower surface
Load Application Point(s)	Trailing edge at Y = 0, ±150 or ±450
Load Application Method	Load on F1 team-supplied adaptors
Adaptor / Pad Details	≤ 50 mm wide ≤ 10 mm forward of trailing edge 8 mm female thread in the underside
Displacement Reference	Forward part of Rear Wing Mainplane at same Y-station
Displacement Direction	Along loading axis
Deflection Limit(s)	≤ 3 mm
Test Conditions	One Y location at a time
Notes	N/A

C3.18.13 Rear Wing Endplate Flexibility

Field	Description
Component	Rear Wing Endplates
Load(s)	50 N
Load Direction(s)	[0, ±1, 0] inward
Load Application Point(s)	[X_R = 670, Z = 550]
Load Application Method	Point load
Adaptor / Pad Details	25 mm rubber pad
Displacement Reference	Opposite rear wing endplate at same X and Z
Displacement Direction	Along loading axis
Deflection Limit(s)	≤ 10 mm
Test Conditions	N/A
Notes	N/A

©2026 Fédération Internationale de l'Automobile

C3.18.14 Rear Wing Skins

Field	Description
Component	Rear Wing Profile ~~Skins~~
Load(s)	60 N
Load Direction(s)	Normal to and away from element
Load Application Point(s)	Skin surface
Load Application Method	Vacuum cup
Adaptor / Pad Details	50 mm diameter vacuum cup
Displacement Reference	Lower surface ≥ 300 mm away at same X
Displacement Direction	Normal to surface on the edge of the vacuum cup
Deflection Limit(s)	≤ 2 mm
Test Conditions	N/A
Notes	N/A

C3.18.15 Additional Diagnostics

To allow the behaviour of Bodywork to be monitored, F1 Teams are required, as determined by the FIA, to apply contrasting markers to Bodywork and may be required to run additional cameras provided by the FIA. Details and positions of these markers and additional Cameras are given in the document FIA-F1-DOC-050.

An F1 Team may be required by the FIA to run additional cameras specified by the FIA in Position 2 RHS (C8.16.7) and/or Position 3 (as defined in C8.16) in any free practice session. Such a camera will not be considered as Bodywork.

C3.19 Aerodynamic Component construction

C3.19.1 Front Wing Endplate

Areas of the bodywork declared as Front Wing Endplate in Article C3.10.6;

a. the upper 30mm and the forward 30mm of Front Wing Endplate Body

b. the outboard 30mm and the forward 30mm of Front Wing Outboard Footplate

c. the outboard 30mm and the forward 30mm of Front Wing Endplate Diveplane

must be made to the laminate PL–ANTISPLINTER "Type A" with an areal weight of reinforcing between 300gsm and 650gsm, over a foam core.

Fasteners and related inserts, for the purpose of attaching the front wing endplate to the profiles must be positioned at least 30mm rearward of the leading edge of the endplate.

Metallic components are allowed but must not cause a risk to other competitors. The Technical Delegate may ask an F1 Team to modify or remove metallic components that may pose such a risk.

C3.19.2 The Secondary Roll Structure fairings, defined in Article C3.13.3, must be made to the laminate PL–HALO.

©2026 Fédération Internationale de l'Automobile

C3.19.3 Floor

Metallic components used in the Floor Bodywork must not cause a risk to other competitors.

The Technical Delegate may ask an F1 Team to modify or remove metallic components that may pose such a risk

C3.19.4 Bib

Floor Bodywork or geometry within RV-BIB-STAY that lies within the plan view area of RV-FLOOR-BIB and below Z = 150, may incorporate isolated sections of either compliant material or thin laminate to accommodate the motion of the Floor Bodywork, as described in Article C3.18.6, resulting from contact between the plank assembly and the ground.

2027

ARTICLE C4: MASS

Advisory Committee: TAC
Governance: F1 Commission / WMSC

C4.1 Minimum mass

During the Sprint Qualifying and Qualifying sessions, The Minimum Mass is 726kg plus the Nominal Tyre Mass. In all other sessions, the Minimum Mass is 724kg plus the Nominal Tyre Mass.

At all times during the Competition, Car Mass must not be less than the Minimum Mass.

When a Heat Hazard is declared, the Minimum Mass will be increased by the Heat Hazard Mass Increase.

If, when required for checking, a car is not already fitted with dry–weather tyres, its mass will be determined using a set of dry–weather tyres selected by the FIA technical delegate.

C4.2 Mass distribution

At all times during the Qualifying and Sprint Qualifying Sessions, with the car resting on a horizontal plane:

i. the mass measured at the front axle must not be less than the Minimum Mass specified in Article C4.1 factored by 0.44.

ii. the mass measured at the rear axle must not be less than the Minimum Mass specified in Article C4.1 factored by 0.54.

If, when required for checking, a car is not already fitted with dry–weather tyres, its mass will be determined using a set of dry–weather tyres selected by the FIA technical delegate.

If, when required for checking, a Heat Hazard has been declared, the increase in mass will not be considered.

C4.3 Ballast

C4.3.1 General

Ballast can be used provided it is secured in such a way that tools are required for its removal and that it remains immobile with respect to the Sprung Mass in its entirety. It must be possible to fix seals if deemed necessary by the FIA technical delegate.

F1 Teams must show by calculation that any ballast fitted within the Cockpit would be retained in place if any one of its fixings were removed and it were subjected to a 100g acceleration in any direction.

C4.3.2 Driver Ballast

Ballast designated for the purpose of achieving the driver mass specified in Article C4.5.2 must:

a. Be entirely located to the car between the front and rear extent of the cockpit entry template.

b. Be attached securely to the Survival Cell and sealed by the FIA.

c. Be clearly identified.

d. Have a density greater than 7500Kg/m^3.

©2026 Fédération Internationale de l'Automobile

e. Perform no additional function.

A nominal such mass of 12kg should be present for the impact test described in Article C13.2.

C4.3.3 Ballast Ahead of X_A=0

Any Ballast mounted ahead of X_A=0, that is not mounted within the ~~forward-most profile of~~ Front Wing Profiles, must be present during the Front Impact Structure Dynamic Test defined in Article C13.6.3.

C4.4 Adding during the Race or Sprint Session

With the exception of compressed gases, no substance may be added to the car during the Race or Sprint Session. If it becomes necessary to replace any part of the car during the Race or Sprint Session, the mass of the new part must not be more than that of the original part.

When considering Complete Wheels, differences in mass arising solely from manufacturing tolerances and the normal characteristics of the tyre and wheel assemblies, including tyre type, balance weights and tyre wear, shall be disregarded.

C4.5 Reference Mass of the driver and Driver Ballast

C4.5.1 The reference Mass of the Driver will be established by the FIA technical delegate in accordance with the procedure defined in FIA-F1-DOC-035 at the first Competition of the Championship, this reference mass may be amended at any time during the Championship season if deemed necessary by the FIA technical delegate.

C4.5.2 The reference Mass of the Driver plus the mass of any Driver Ballast must not be less than 82kg at any time during the Competition.

C4.6 Heat Hazard Mass Increase

During a **TTCS** for which a Heat Hazard has been declared:

a. The Heat Hazard Mass Increase is 5kg.

b. The sum of the masses of the following items must be no less than 5kg;

   i. The difference in mass between the driver's personal equipment normally used and that used for a Heat Hazard session.

   ii. The mass of any driver cooling system not included in (i) above.

During a Competition at which a Heat Hazard has been declared for any session; For any LTCS or TTCS for which a Heat Hazard has not been declared:

c. A Heat Hazard Mass Increase of 2kg will be applied.

d. The mass of the driver cooling system must be no less than 2kg.

C4.7 Determination of Nominal Tyre Mass

To determine the Nominal Tyre Mass, the masses of new, production, dry weather, tyres will be measured by the tyre provider and published after the final day of TCC opportunity (as defined in Article B11.2.7.b) prior to the start of the Championship and will be the mean mass of sample of 50 tyres per axle.

©2026 Fédération Internationale de l'Automobile

In the case of a change in tyre specification during the Championship, the Nominal Tyre Mass will be adjusted if required.

2027

ARTICLE C5: POWER UNIT

Advisory Committee: PUAC

Governance: PU Manufacturers' Governance Agreement / WMSC

C5.1 Engine specification

C5.1.1 Only 4-stroke engines with reciprocating pistons are permitted.

C5.1.2 Engine cubic capacity must be 1600cc (+0/−10cc).

C5.1.3 All engines must have six cylinders arranged in a 90° "V" configuration and the normal section of each cylinder must be circular.

All six cylinders must be of equal capacity.

C5.1.4 Engines must have two intake and two exhaust valves per cylinder.

Only reciprocating poppet valves with axial displacement mechanically actuated by the camshafts are permitted.

The sealing interface between the moving valve component and the stationary engine component must be circular. The sealing surfaces on the stationary engine component must be either the Cylinder Head itself defined by C5.7.8 g), any coating on the Cylinder Head permitted by C5.6.2, or the conventional Inserts permitted by C5.1.7 a).

C5.1.5 Engine exhaust gases may only exit the Cylinder Head through outlets outboard of the cylinder bore centre line and not from within the "V" centre.

C5.1.6 The crankshaft may only have three connecting rod bearing journals.

C5.1.7 In a Cylinder Head, only Inserts approved by the FIA Technical Department will be allowed. and this must be confined to:

a. Conventional valve seat Inserts up to a maximum diameter of 4mm larger than the corresponding valve heads

b. Conventional valve guide Inserts

c. An Insert whose part residing in the cylinder head is wholly contained in a cylinder of external diameter 15 mm coaxial with the axis of the spark plug

The total volume of the Inserts listed above in a. and b. cannot be more than 3% of the total volume of each Cylinder Head.

An additional allowance of 1% of the total volume (including all Inserts) of each Cylinder Head is permitted for Inserts other than those mentioned above, including helicoils, but none of these Inserts can be exposed to the Combustion Chamber.

C5.1.8 Unless specified otherwise, the total volume of Inserts within ICE components related to items 1 and 4 of the Appendix C4 table1 cannot be more than 10% of the total volume (including all Inserts) of the component. Inserts in other components are not restricted.

C5.1.9 Dismountable components assembled to the Cylinder Head exposed to the combustion chamber must be approved by the FIA Technical Department and are confined to:

a. The Fuel Injectors

b. The spark plugs

©2026 Fédération Internationale de l'Automobile

c. The poppet valves (Article C5.3.4)

d. A single component per cylinder to replace an In-Cylinder pressure sensor with a maximum outside diameter of 7mm.

e. A component whose part residing in the cylinder head is wholly contained in a cylinder of external diameter 15 mm coaxial with the axis of the spark plug

C5.1.10 All Power Unit breather fluids may only vent to atmosphere and must pass through a single orifice which is positioned behind X_R=0, inboard of Y=100 and below Z=400. No breather fluids may re-enter the Power Unit.

C5.1.11 With the exception of leakage through joints (either into or out of the system) all and only the air entering the Compressor Inlet must enter the Combustion Chambers.

C5.1.12 The Power Unit may be equipped with a maximum of two Wastegates and two Pop-Off Valves. Only poppet valves with a circular sealing interface and axial displacement are permitted for the Wastegate and Pop-Off Valves.

C5.1.13 Engine oil consumption must never exceed 0.30l/100km in normal operating conditions.

C5.1.14 All Wastegate exit fluids must pass through a Wastegate tailpipe which must be connected to the Exhaust Tailpipe, downstream of the turbine wheel.

C5.1.15 All Pop-Off exit fluids must pass through a return line which must be connected downstream of the inlets specified in C5.6.1 and upstream of the compressor wheel

C5.1.16 For the purpose of Component Classification in Table 1 of Appendix C4, Thermal Insulation that is permanently attached to another component or assembly (such as by riveting, bonding, welding, brazing, or plating) will be considered part of that component or assembly.

C5.1.17 The Clutch assembly, including but not limited to friction plates, springs, cover plate, may be fitted to the Flywheel but will not contribute to the mass of the Flywheel. A clutch basket connected directly to the rear of the crankshaft will be classified as a flywheel.

C5.1.18 **Treatment of Numerical Values**

Unless stated otherwise any numerical values specified in Article C5 will be static values at ambient temperature

C5.2 Power Unit Energy Flow

C5.2.1 The use of any device, other than the engine described in C5.1 above, and the ERS-K, to propel the car and/or Recharge energy, is not permitted.

C5.2.2 Energy flows, power and ES state of charge limits are shown in the energy flow diagram below: When the car is on the track a lap will be measured on each successive crossing of the timing line, however, when entering the pits the lap will end, and the next one will begin, at the start of the Pit Lane

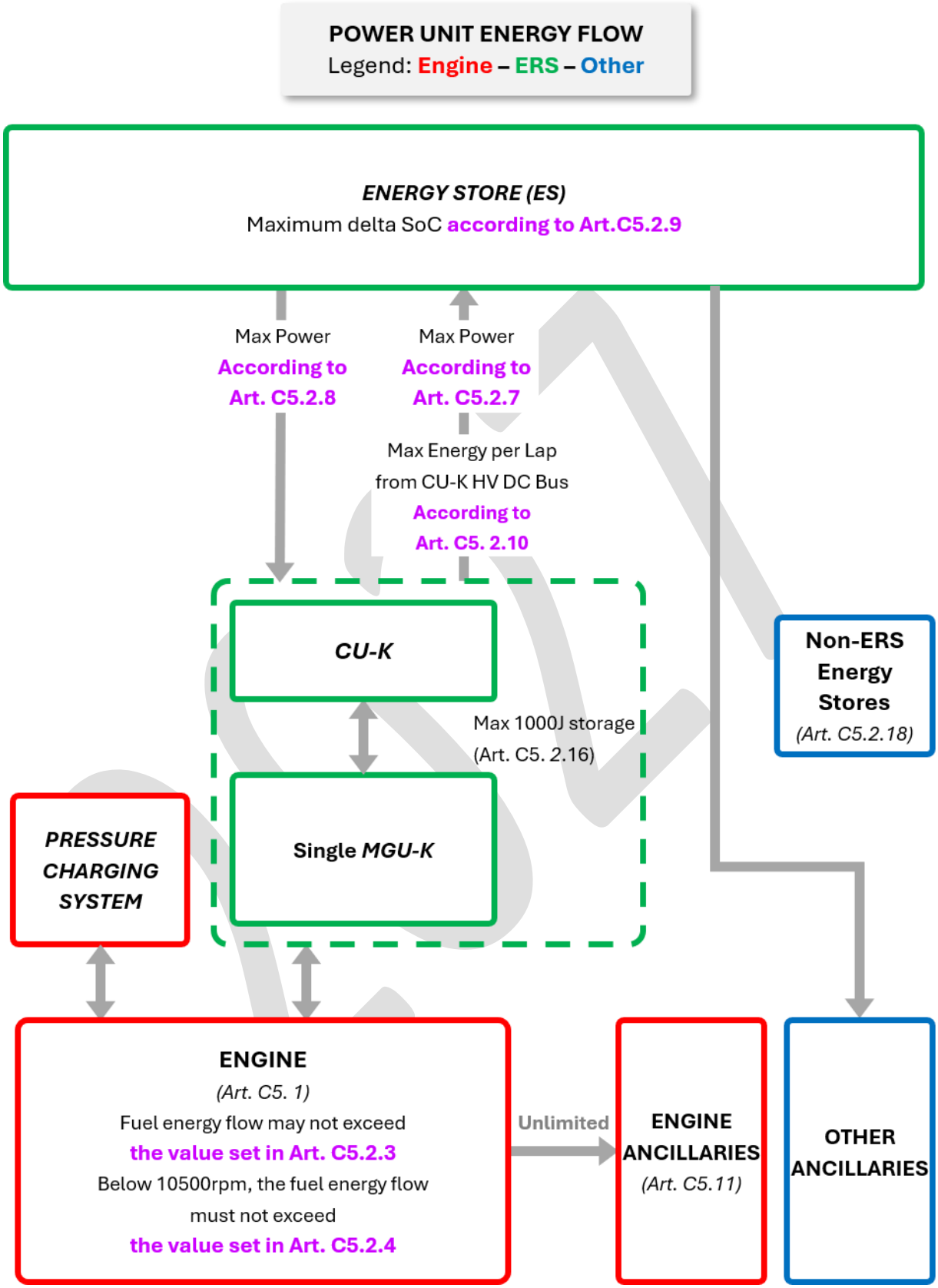

©2026 Fédération Internationale de l'Automobile

C5.2.3 Fuel energy flow must not exceed ~~3000MJ/h~~ 3150MJ/h, with a maximum energy flow per cylinder never exceeding 550MJ/h under normal operating conditions.

C5.2.4 Below 10500rpm the fuel energy flow must not exceed EF(MJ/h)= 0.284*N(rpm)+168 ~~0.27*N(rpm)+165~~

C5.2.5 At partial load, the fuel energy flow must not exceed the limit curve defined below:

EF (MJ/h) = 380 when the engine power is equal to or below −50kW

EF (MJ/h) = 9.78 x engine power (kW) + 869 when the engine power is above −50kW

C5.2.6 When assessing compliance with the above two articles, the fuel mass flow rates measured by the Fuel Flow Meter will be converted in the SECU in fuel energy flow rates using the energy density and the LHV of the fuel as measured by the FIA. The procedure which will be used to determine these values may be found in the document FIA-F1-DOC-058.

C5.2.7 The absolute electrical DC power of the ERS-K may not exceed ~~350kW~~ 375kW.

C5.2.8 Additionally, and subject to Article B7.2, the electrical DC power of the ERS-K used to propel the car may not exceed:

~~i. When Overtake is not active:~~

~~P(kW) = 1800 – 5 * car speed (kph) when the car speed is below 340kph~~

~~P(kW) = 6900 – 20 * car speed (kph) when the car speed is equal to or above 340kph and below 345kph~~

~~P(kW) = 0 when the car speed is equal to or above 345kph~~

~~ii. When Overtake is active up to:~~

~~P(kW) = 7100 – 20 * car speed (kph) when the car speed is below 355kph~~

~~P(kW) = 0 when the car speed is equal to or above 355kph.~~

i. 350kW when Overtake is active during the Race or Sprint session;

ii. 300kW during Qualifying or Sprint Qualifying sessions, and when Overtake is not active during the Race or Sprint session;

iii. In the Race or Sprint session on specified circuit sectors, during any power limited period, subject to the conditions specified in Article B7.2:

P(kW) = 250 when the car speed is below 310kph

P(kW) = 1800 – 5 * car speed (kph) when the car speed is equal to or above 310kph and below 340kph

P(kW) = 6900 – 20 * car speed (kph) when the car speed is equal to or above 340kph and below 345kph

P(kW) = 0 when the car speed is equal to or above 345kph

©2026 Fédération Internationale de l'Automobile

Further limits apply in the form of curves dependent on car speed and specific power curves that will be used in Low Grip conditions, the details of which may be found in FIA-F1-DOC-111.

[FIA] MGU-K deployment remains subject to modification if clear evidence identifies torque delivery concerns on lower power curves.

C5.2.9 The difference between the maximum and the minimum state of charge of the ES may not exceed ~~4MJ~~ 4.5MJ at any time the car is on the track.

C5.2.10 Recharge, as measured at the CU-K HV DC Bus, must not exceed:

a. A limit of 8.5MJ in each lap, subject to the following additional conditions:

   i. This limit may be reduced to 7MJ at Competitions where the FIA determines that the maximum possible energy harvested per lap attributable under braking and in partial load is no more than 7MJ.

   ii. This limit may be further reduced to no less than 4MJ for Sprint Qualifying and Qualifying sessions at Competitions where the FIA determines that the harvesting strategies required to achieve the above limit are excessive, subject to the conditions specified in Article B7.2.

   iii. Up to 0.5MJ of additional energy may be harvested in each lap subject to the conditions specified in Article B7.2.

   The vehicle fundamentals used to determine the above limits will be provided in the document FIA-F1-DOC-034.

b. A limit of 10 MJ in the following laps:

   i. During the Race or Sprint session:

      o Reconnaissance lap(s);

      o Formation lap(s);

      o All laps carried out behind the safety car.

   ii. During Qualifying or Sprint Qualifying sessions:

      o Outlaps;

      o Slow laps identified as such by the SECU.

c. No Recharge limit applies to laps carried out behind the safety car in Low Grip conditions.

C5.2.11 The MGU-K mechanical torque magnitude may not exceed 500Nm. The torque will be referenced to the crankshaft speed.

C5.2.12 During a standing start from the grid the MGU-K may only be used once the car has reached 50 km/h.

Notwithstanding the above, the MGU-K may deliver positive torque below 50 km/h solely when mandated by the FIA Standard ECU to maintain a minimum acceleration.

C5.2.13 The amount of stored energy in the ES may not be increased by more than 100kJ whilst the car is stationary in the garage during the Sprint Qualifying and Qualifying Sessions.

2027

C5.2.14 ERS Policing

a. In order to verify that the energy and power requirements of the ERS are being respected, all cars must be fitted with two DC sensors. Those sensors may only be installed outside the sealed perimeter of any PU-CE and used as specified below:

   One DC sensor must be connected to the ES High Voltage negative DC pole to measure all electrical energy into and out of the Energy Store via the HV DC Bus.

   The other DC sensor must be connected to the CU-K High Voltage positive DC pole to measure all electrical energy and power into and out of the ERS-K via the HV DC Bus.

   The DC sensors voltage sense wire must be connected to the dedicated measurement point defined by the FIA Technical department.

b. Electrical energy may not flow from or into the ES and CU-K without being directly measured by one of the two DC sensors, previously listed. This must be guaranteed by design and verifiable by inspection.

c. The design of the ERS and the installation of the two DC sensors must be approved by the FIA.

d. An airgap of 1mm must be present between the CU-K and any other consumer fitted inside the ES main enclosure. The links allowed to cross the airgap separation volume include, but are not limited to: the elements of the HV DC bus, ERS-K phase conductors, cooling system components, mechanical support(s), low voltage looms and connectors dedicated for communication lines, low voltage power supply, interlock loop systems, temperature sensors, MGU position sensors, EMC screening and any other sensor used by the ERS-K. Those links must be minimal and essential to the CU-K operation.

e. Details of each ERS auxiliary circuit and its connection to any pole of the ERS high voltage DC bus must be present in the technical dossier, as stated in Article C5.2.14.c. It shall include circuit diagrams and a table with maximum and minimum values of the electrical current that can flow from or into the HV DC bus under normal operating conditions.

f. With exception of ERS Auxiliary Circuit, electrical energy with an instantaneous power higher than 2W may not flow from CU-K logic or driver boards (usually low voltage parts) into the CU-K power stage (usually HV). This must be guaranteed by design and verifiable by inspection.

g. The CU-K must exclusively perform functionalities related to the operation of any MGU-K sensor, the usage of an ES offboard (dis)charger, and the power conversion between the CU-K DC poles input and the CU-K output going into the MGU-K.

C5.2.15 Cars must be fitted with homologated sensors which provide all necessary signals to the FIA data logger in order to verify the requirements defined in this article are being respected.

C5.2.16 With exception of the ES, the cumulative amount of stored energy on ERS electronic components supplied by voltage sources should not be higher than 1000J.

C5.2.17 When the car is on the track the maximum instantaneous electrical power linked to the operation of ERS Auxiliary Circuit connected on the ES side of the ES DC Sensor and drawn by the BMS directly from the ES cells must not exceed 50W in total. This must be guaranteed by design and verifiable by inspection.

©2026 Fédération Internationale de l'Automobile

C5.2.18 With the exception of the ERS, the cumulative amount of energy stored in the Power Unit should not be higher than 300kJ. Additionally, no more than 20kJ can be recovered per lap at a rate greater than 2kW.

C5.2.19 When the car is stationary on the grid prior to a standing start the MGU-K torque may only be negative (i.e. charging the ES) except for torque requested by an MGU-K active damping strategy whose sole purpose is to protect the MGU-K Mechanical Transmission.

C5.2.20 No off-board ES charger of any kind may be used whilst the car is in the pitlane

C5.2.21 A fixed efficiency correction of 0.97, or its inverse where appropriate, will be applied by the Standard ECU software when converting electrical physical quantity values into mechanical values

C5.2.22 ERS-K efficiency maps, accurately reflecting the ERS-K losses, must be submitted and updated according to the requirements detailed in the FIA-F1-DOC-096 document. These maps will be used in the ADUO ICE Performance Index calculation.

C5.3 Turbo Charger

C5.3.1 Pressure charging may only be affected by the use of a sole single stage, single sided Turbo Charger compressor with a single inlet linked to a sole single stage Turbo Charger turbine by a shaft assembly. The compressor blades must be attached to a common hub surface and all air entering the Combustion Chamber must pass through the single exducer of these blades. The shaft must be designed so as to ensure that the shaft assembly, the compressor and the turbine always rotate about a common axis and at the same angular velocity. Moreover, all rotating parts of the Turbo Charger must have a fixed inertia by design.

1. With the exception of Heat Exchanger cooling of the engine intake air, incidental heat transfer and fluid friction losses, devices that extract energy from the engine intake air system between the inlets described in C5.6.1 and the Combustion Chamber are forbidden.
2. With the exception of the incidental heat transfer and fluid friction losses, the use of the Turbo Charger turbine is the sole permitted means of extracting energy from the exhaust fluids. The Turbo Charger turbine is the only means of transferring energy into the rotating parts of the Turbo Charger. The energy of the rotating parts of the Turbo Charger may not be transferrable to any other component.

Only parts approved by the FIA Technical Department may be used. Further to the provisions of the Article C18.2.5, the approval of the FIA Technical Department is conditional upon the PU manufacturer, intending to use such parts during a Championship season undertaking not to conclude any Exclusivity Agreement for the supply of such parts with the supplier of these parts. The approval request form must be sent by the PU Manufacturer to the FIA before the 1st of November of the preceding year.

C5.3.2 Engine intake air pressure must be less than ~~4.8 barA~~ 5.0 barA at all times. The pressure of the air will be measured by two FIA approved and sealed devices through which all air destined for combustion must flow. These devices must be installed in FIA approved locations situated in the engine intake air system downstream of the charge air cooling system (as described in Article C5. 22.2).

©2026 Fédération Internationale de l'Automobile

C5.3.3 The axis of the turbocharger shaft must be parallel to Y=0, inboard of Y=25 and at an angle of 0 +/- 1 degree to X=axis.

C5.3.4 The total mass of the turbocharger (TC) must be no less than 12kg.

C5.3.5 Referring to Drawing 4 of Appendix C3, the turbocharger compressor and turbine must satisfy the following dimensional constraints. Only compressor and turbine wheels approved by the FIA Technical Department will be allowed:

a. The compressor exducer blade outer diameter (A) must lie between 100mm and 110mm. For the avoidance of doubt, no part of the compressor wheel (including blades, hub and any blade/hub fillet radius as indicated by (g) on Drawing 4 of Appendix C3) can have a diameter more than the upper limit and the maximum diameter of the compressor wheel (including blades, hub and any blade/hub fillet radius) cannot have a diameter smaller than the lower limit.

b. The compressor axial distance from the outside diameter of the inducer blade edge (h) to rear plane of exducer (f), at its outer diameter (B) must lie between 30mm and 35mm

c. The turbine inducer blade outer diameter (C) must lie between 90mm and 100mm. For the avoidance of doubt, no part of the turbine wheel (including blades, hub and any blade/hub fillet radius as indicated by (k) on Drawing 4 of Appendix C3) can have a diameter more than the upper limit and the maximum diameter of the turbine wheel (including blades, hub and any blade/hub fillet radius) cannot have a diameter smaller than the lower limit.

d. The turbine axial distance from the outside diameter of the exducer blade edge (i) to forward plane of inducer (j), at its outer diameter (D) must lie between 35mm and 40mm

e. The maximum distance (E) between the rear of the compressor exducer (f) and the front of the turbine inducer (j) will be 175mm

C5.3.6 The rotational speed of the Turbo Charger may not exceed 150,000rpm.

C5.3.7 The Compressor Inlet must extend upstream of any part of any variable geometry device permitted by Article C5.7.

C5.4 Power unit geometrical constraints and dimensions

C5.4.1 The cylinder bore diameter must be 80mm (±0.1mm).

C5.4.2 The cylinder bore spacing must be 101.0 ±2mm.

C5.4.3 No cylinder, as referred to by C5.1.3, of the Engine may have a geometric compression ratio higher than 16.0, ~~measured in the following conditions:~~ when the Engine is at 130degC. Any component, assembly, mechanism, or integrated arrangement of components that is designed or functions to increase the compression ratio in operating conditions beyond 16.0 is prohibited.

- ~~Until 31 May 2026: when the Engine is at ambient temperature~~
- ~~From 1 June 2026 to 31 December 2026: when the Engine is at ambient temperature as well as when the Engine is at 130degC. Any component, assembly, mechanism, or integrated arrangement of components that is designed or functions to increase the compression ratio in operating conditions beyond 16.0 is prohibited.~~

©2026 Fédération Internationale de l'Automobile

The procedure which will be used to assess compliance with this article must be defined by each PU Manufacturer according to the instructions detailed in the document FIA-F1-DOC-042. In this procedure, all dead volumes and/or cavities connected to the main combustion chamber, including, but not limited to the pre-chamber, piston top land volume and gas ports must be clearly identified and approved by the FIA. These volumes must be sealed prior to measurement. To compensate for these volumes, a fixed value of 1.2 will be deducted from the measured compression ratio for the purpose of assessing compliance with the limit specified above.

This procedure must be approved by the FIA Technical Department and included in the PU Manufacturer homologation dossier.

C5.4.4 Each cylinder centreline must pass through the crank axis ±0.1mm.

C5.4.5 The crankshaft centre line must lie at Y=0 and Z=90 (±0.5mm) and be parallel to the X axis. The Power Unit may only transmit torque to the Gearbox by means of a single output shaft that must be co-axial with the crankshaft. The output shaft must rotate clockwise when viewed from the front of the car.

C5.4.6 The crankshaft main Journal Bearing Diameter, measured on the crankshaft, must be no less than 44.95mm. The main Journal Bearing Width excluding chamfer must be no less than 18.95mm.

The surface area of the main journal bearing, calculated using all surfaces within 0.06mm of the maximum radial thickness must be no less than 2500mm^2. This will be verified by design.

C5.4.7 The crankshaft crank pin Journal Bearing Diameter, measured on the crankshaft, must be no less than 41.95mm. The crank pin bearing width excluding the chamfer must be no less than 17.95mm

The surface area of the crank pin journal bearing, calculated using all surfaces within 0.06mm of the maximum radial thickness must be no less than 2200mm^2. This will be verified by design.

C5.4.8 The Deck Height must be a minimum of 168mm.

C5.4.9 The connecting rod length measured between the centre of the crankshaft journal bore and the piston pin bore must lie between 119.5mm and 120.5mm.

C5.4.10 Each piston must have three piston rings, two compression rings and one oil control ring.

C5.4.11 The piston pin diameter must lie between 18.0 and 19.0mm.

C5.4.12 The valve stem diameter must be no less than 4.95mm.

C5.4.13 The intake valves' head diameter must lie between 32.5mm and 34.5mm. All intake valves must have an identical design.

C5.4.14 The exhaust valves' head diameter must lie between 27.0mm and 29.0mm. All exhaust valves must have an identical design.

C5.4.15 For each cylinder, the following three planes are defined (see Drawing 5 of Appendix C-3):

- The "Lateral plane", which passes through the cylinder centreline and is normal to the crank axis
- The "Longitudinal plane", which passes through both the cylinder centreline and the crank axis
- The "Transverse plane", which is normal to the cylinder centreline and coincident with the Top Deck

Referring to the above-defined planes, the following conditions apply:

a. The axes of the two intake valves must intersect the Transverse plane inboard of the Longitudinal plane, and be symmetrically arranged about the Lateral plane

b. The axes of the two exhaust valves must intersect the Transverse plane outboard of the Longitudinal plane, and be symmetrically arranged about the Lateral plane

c. The spark plug axis must intersect the Transverse plane within a quadrilateral defined by the four intersection points defined in points (a) and (b) above

d. The injector axis must lie on the lateral plane, outside the longitudinal plane, and the angle between the injector axis and the cylinder centreline must be 70deg (± 5 deg).

C5.4.16 All elements of the Power Unit specified in the relevant column of the table in Appendix C4 must be installed in the Reference Volumes defined in Appendix C2 and prefixed with RV-PU-. Elements must be installed entirely within the relevant Reference Volume. Where Reference Volumes intersect, elements from any of the intersecting volumes will be permitted within the intersection.

Referring to the "REFERENCE VOLUME" column of the Appendix C4:

a. All the items listed as "ICE" must be installed within RV-PU-ICE

b. All the items listed as "ERS" must be installed within RV-PU-ERS

c. All the items listed as "TC" must be installed within RV-PU-TC

d. All the items listed as "OT" must be installed within RV-PU-OT

Additionally, the following elements must be installed entirely within RV-PU-ERS:

e. HV connections and ERS-K Phase Conductors.

f. All elements within the ES Main Enclosure (defined in Article C5.19.7).

C5.4.17 Engine (ICE) mountings may only comprise six M12 studs for connection to the Survival Cell and either four or six M12 studs for connection to the Gearbox Case. These studs may be fitted on the Survival Cell, Power Unit or Gearbox Case, their installed end must be M12 and their free end may be a different diameter. Every stud must have a tensile strength greater than 100kN.

The six mounting faces of the studs for connection to the Survival Cell must lie at [X_{PU}, Y, Z]=[0, ±270, 25], [0, ±360, 270] and [0, ±190, 440]. All six of these studs must be used.

The four mounting faces of the studs for connection to the Gearbox Case must lie at [X_{PU}, Y, Z]=[480, ±125, 25] and [480, ±265, 360]. All four of these studs must be used. Optionally, an additional two studs may be used, provided their coordinates are at [X_{PU}, Y, Z]= [480, ±150, 140].

A tolerance of +/- 0.2mm will be permitted on all of the above dimensions, all dimensions refer to the centre of the studs. All dimensions in this Article refer to studs fitted symmetrically about the car centre plane.

Any part which provides additional load path, aside from the path through the studs defined above, from the Survival Cell to the ICE or from the ICE to the Gearbox Case, is prohibited unless this is incidental to its principal purpose. Furthermore, any such part may provide no greater structural connection between these pairs of assemblies than is reasonable for the safe and reliable fulfilment of its purposes.

C5.5 Mass and centre of gravity

C5.5.1 Depending on where the MGU-K Mechanical Transmission (as defined in item 27 of Appendix C4) is located, the overall mass of the ICE "PU Mass group" elements as referred to in Appendix C3 must be no less than the values defined below:

a. If all of the speed ratio of the MGU-K Mechanical Transmission is located in the RV-PU-ERS the total mass of the ICE must be no less than 130.0kg.

b. If all of the speed ratio of the MGU-K Mechanical Transmission is located in the RV-PU-ICE the total mass of the ICE must be no less than 134.0kg.

c. If part of the speed ratio of the MGU-K Mechanical Transmission is located in both the RV-PU-ICE and the RV-PU-ERS the total mass of the ICE must be no less than 132.0kg.

C5.5.2 The overall mass of the PU must be a minimum of 185 kg.

C5.5.3 The centre of gravity of the Power Unit must be above Z=200. The parts considered are listed as "ICE" and "TC" in the "PU MASS GROUP" column of Appendix C3, with the exception of items 6 (ICE intake air system components), 20 (ICE-mounted electrical components), 29 (MGU-K Torque sensor), 30 (SCM), 41 (Powerbox), 43 (General electrical devices outside of the ESME) 44 (source of energy independent of the ES), 70 (PU air valve regulators) and 71 (PU air valve system equipment).

C5.5.4 The mass of a piston (with piston -pin, piston -pin retainers and piston rings) may not be less than 350g.

C5.5.5 The mass of a connecting rod (with fasteners, small and big end bearings) may not be less than 320g.

C5.5.6 The mass of the complete crankshaft assembly between the mid positions of the front and rear main bearing journals (including balance masses, bolts, bungs, O-rings between the boundaries), may not be less than 5800g. See drawing 1 in Appendix C3.

C5.5.7 When establishing conformity with Articles C5.5.1, C5.5.2, C5.5.3 and Appendix C5, the homologated Power Unit perimeter will be defined in accordance with the table shown in Appendix C4.

C5.5.8 ICE Ballast may be fitted to the ICE in order to achieve the required mass subject to the following restrictions:

a. It must have no function other than to add mass to the ICE.

b. The sum of all ICE Ballast components will have a maximum mass of 2kg and homologated within a range of +/-200 gram.

c. ICE Ballast must be secured in such a way that tools are required for its removal and that it remains immobile with respect to the Sprung Mass in its entirety. It must be possible to remove

©2026 Fédération Internationale de l'Automobile

the Ballast without breaking seals on any other part of the ICE. It should also be possible to affix a FIA security label to the Ballast if deemed necessary by the FIA technical delegate.

d. Have a density greater than 7500Kg/m3.

C5.6 Engine intake air

C5.6.1 With the exception of incidental leakage through joints or cooling ducts in the engine intake air system (either into or out of the system), all air entering the engine must enter the bodywork through a maximum of two inlets which are located on a single X plane between X_C= −850 and X_R= −500 and above Z=200.

Furthermore, any such inlets must be visible in their entirety when viewed from the front of the car without the driver seated in the car and with the secondary roll structure any parts attached to it removed (see Article C12.4.2), and ignoring any Antennae and pitot tubes mounted on the upper surface of the Survival Cell.

C5.6.2 The addition of any substance other than fuel, as described in Article C5.9.3, into the air destined for combustion is forbidden. Exhaust gas recirculation is forbidden.

C5.6.3 There must be no more than one butterfly or rotating barrel, as explained in the Throttle definition, in the geometrical path of air exiting the Compressor Outlet and going to any cylinder.

C5.6.4 Any component of the ICE intake air system forming a volume whose surface area, measured perpendicular to the geometrical path of the air directed to any cylinder, is at least 10000mm^2 per bank or 3400mm^2 per cylinder supplied, shall be defined as Engine Plenum.

C5.7 Variable geometry systems

C5.7.1 With the exception of Wastegates, variable geometry exhaust systems are not permitted. No form of variable geometry turbine (VGT) or variable nozzle turbine (VNT) or any device to adjust the gas throat section at the inlet to the turbine wheel is permitted.

C5.7.2 Variable valve timing and variable valve lift profile systems are not permitted.

C5.7.3 Moveable Trumpets are not permitted, and any geometry conveying the air from the Compressor Outlet to the cylinder inlet must be fixed, except the Throttles and the pop-off valves.

C5.7.4 Variable geometry intake device(s) are permitted in the compressor housing.

C5.8 Exhausts

C5.8.1 With the exception of incidental leakage through joints (either into or out of the system) and Power Unit breather fluids, all and only the fluids entering the Compressor Inlet and Fuel Injectors must exit from the Engine Exhaust System.

C5.8.2 With the exception of incidental leakage, all and only exhaust fluids exiting the turbine and the wastegate must pass through the Exhaust Tailpipe defined in Article C3.9.2.

C5.8.3 The wall thickness of all exhaust pipes from the Cylinder Head exhaust flange to the turbine and Wastegate must be a minimum of 1.0mm and will be verified by design. The measured component mass must not be less than 97% of the mass calculated from the homologated CAD model. The procedure which will be used to assess compliance of an Engine Exhaust System with this article may be found in the document FIA-F1-DOC-102.

©2026 Fédération Internationale de l'Automobile

C5.8.4 The engine must be equipped with lambda sensors either fitted into each exhaust secondary, one per cylinder bank, or a single lambda sensor fitted into the Exhaust Tailpipe. These lambda sensors must be connected to the FIA Standard ECU in a manner specified by the FIA and their measurement must be supplied to the FIA at all times.

C5.9 Fuel systems

C5.9.1 The pressure of the fuel supplied to the Fuel Injectors may not exceed 350barG.

C5.9.2 There may only be one Fuel Injector per cylinder and no Fuel Injectors are permitted upstream of the intake valves or downstream of the exhaust valves. Bespoke injector nozzle designs are permitted.

C5.9.3 All cars must be fitted with a Fuel Flow Meter, wholly within the fuel tank. This sensor may only be installed and used as specified by the FIA Technical Department.

Any device, system, or procedure, the purpose of which is to change the temperature of the Fuel Flow Meter is forbidden.

Furthermore, all fuel delivered to the Power Unit must pass through this homologated sensor and must all be delivered to the Combustion Chambers by the Fuel Injectors described by Article C5.9.2.

C5.9.4 Homologated sensors which directly measure the pressure and temperature of the fuel supplied to the Fuel Injectors must also be fitted, these signals must be supplied to the FIA data logger.

C5.9.5 Any device, system or procedure the purpose and/or effect of which is to increase the flow rate or to store and recycle fuel after the measurement point is prohibited. Additional measurements in each sub-circuit of the fuel system may be requested in order to check compliance. When fuel flow rate is above 90% of the maximum fuel flow defined in C5.2.3, fuel pressures must remain constant in each sub-circuit.

C5.9.6 A maximum of 0.25 litres of fuel may be kept outside the Survival Cell, but only that which is necessary for the normal running of the engine.

C5.9.7 The High Pressure Fuel Pump may only be driven by one of the camshafts actuating the intake or exhaust valves

C5.10 Ignition systems

C5.10.1 Ignition is only permitted by means of a single Ignition Coil and single spark plug per cylinder. No more than one spark per cylinder per engine cycle are permitted.

C5.10.2 Only conventional spark plugs that function by electrical potential discharge across an exposed gap are permitted.

Spark plugs are not subject to the materials restrictions described in Articles C15.6 and C15.7.

C5.10.3 The spark energy per ignition is limited to a maximum of 120.0mJ.

©2026 Fédération Internationale de l'Automobile

C5.11 Ancillaries

C5.11.1 Unless specified otherwise, Ancillaries must be mechanically or electrically driven. Any electrically driven ancillary cannot be linked mechanically to any drivetrain, including the Power Unit. Ancillaries cannot be used to propel the car.

C5.11.2 With the exception of batteries of less than 100 kJ total capacity used for safety and control purposes during ERS start-up and shut-down operations, which must be prevented from supplying energy under normal ERS operation; electrical energy may not flow from any ancillary in the direction of any DC pole of the ERS High Voltage DC bus. This must be guaranteed by design and verifiable by inspection.

C5.11.3 For the ICE and the TC, all fuel pumps delivering more than 10 barG, coolant pumps (including pumps used to circulate the fluid(s) which cool the air destined for combustion), oil pumps, scavenge pumps, oil/air separators and hydraulic pumps must be mechanically driven directly from the engine and/or MGU-K with a fixed speed ratio.

C5.11.4 For the ESME, the MGU-K and the PU-CE, all Ancillaries (including pumps) may be mechanically or electrically driven

C5.12 Power unit torque or power demand

C5.12.1 At any given engine speed the driver torque demand map must be monotonically increasing for an increase in accelerator pedal position.

C5.12.2 At any given accelerator pedal position and above 4,000rpm, the driver torque demand map must not have a gradient of less than – (minus) 0.045Nm/rpm.

C5.12.3 At any given engine speed, the minimum torque in the driver torque demand map must be a negative value greater than the minimum curve defined as Torque (Nm) = −0.0027 * engine speed (rpm) – 30.

C5.12.4 Except for conforming to Article C5.2.8, the driver maximum power demand cannot be reduced by more than 150kW at the start of any power limited pending period, and this power reduction will remain fixed for a minimum of 1s. Further exceptions are permitted for specified circuit sectors, subject to Article B7.2.1. In Low Grip Conditions, a minimum power reduction of 250kW will be imposed in these specified circuit sectors during the Race and Sprint Session.

C5.12.5 The driver maximum power demand cannot be increased during any power limited pending or power limited period, except when the Boost is selected by the driver, or, subject to Article B7.2.1, when a reset of any power reduction is permitted.

C5.12.6 Subject to Article B7.2.1, the driver maximum power demand must not be reduced at any greater than the rates defined below whilst the electrical DC power of the ERS-K is above 100kW:

a. 50kW in any 1s period at Competitions where the FIA determines that the power limited distance exceeds 3500m. The vehicle fundamentals used for the calculation of the power limited distance may be found in the document FIA-F1-DOC-034.

b. 100kW in any 1s period at all other Competitions.

Furthermore, the total power reduction is limited to a maximum of 700kW.

©2026 Fédération Internationale de l'Automobile

C5.12.7 The electrical DC power of the ERS-K may not be reduced at rates greater than those specified in Article C5.12.6, unless:

- the theoretical MGU-K power resulting from reduction at rates equal to those specified in Article C5.12.6 is less than 100kW;
- the ICE power is negative and the ERS-K power needs to be reduced further to achieve the driver demand;
- the ERS-K power needs to be reduced further to achieve the maximum power permitted by Article C5. 2.8;
- the driver power demand is negative;
- a gearshift is in progress.
- car speed is below 210kph, except on specified circuit sectors where a higher speed threshold is defined.

C5.12.8 Specification of power limited pending, power limited, Boost mode and details of the implementation in the FIA Standard ECU of the application and monitoring of Article C5.12 may be found in the document FIA-F1-DOC-058.

C5.13 Power unit control

C5.13.1 The maximum delay allowed, computed from the respective signals as recorded by the FIA ADR or FIA Standard ECU, between the accelerator pedal position input signal and the corresponding output demands being achieved is 50ms.

C5.13.2 Teams may be required to demonstrate the accuracy of the Power Unit configurations used by the FIA Standard ECU.

C5.13.3 Power unit control must not be influenced by clutch position, movement or operation.

C5.13.4 The idle speed control target may not exceed 4,000rpm.

C5.13.5 A number of Power Unit protections are available in the FIA Standard ECU.

A minimum of nine seconds hold time should be configured for the power unit protections enabled during qualifying and Race. The configuration of the air tray fire detection and throttle failsafe are exceptionally unrestricted in order to allow each team to achieve the best level of safety.

C5.13.6 The Power Unit must achieve the torque demanded by the FIA standard software.

C5.13.7 Regulatory torque sensors must be fitted to measure the following output torques:

a. The PU torque output (Ref Appendix C4 Item 21)

b. The MGU-K torque output (Ref Appendix C4, item 29)

The installation and the connectivity of each of these torque sensors to the FIA Standard ECU must be approved by the FIA.

©2026 Fédération Internationale de l'Automobile

C5.13.8 Engine intake air temperature must be more than ten degrees centigrade above ambient temperature. When assessing compliance, the temperature of the air will be the lap average recorded, by an FIA approved and sealed sensor located in an FIA approved location situated in the engine intake air system downstream of any charge air cooling system, during every lap of the Sprint Qualifying Session, the Sprint Session, the Qualifying Session, and the Race. The first lap of the race, laps carried out whilst the safety car is deployed, laps with a time at least 20% greater than the fastest lap of the session, pit in and out laps and any laps that are obvious anomalies (as judged by the FIA) will not be used to assess the average temperature. The ambient temperature will be that recorded by the FIA appointed weather service provider. This information will also be displayed on the timing monitors.

C5.13.9 Any pressure sensor used to measure pressure of any fluid necessary to ensure the Power Unit functions correctly at all times (including but not limited to coolant, oil, fuel and air) will be classified as a regulatory sensor (reference item 22 Appendix C4).

C5.13.10 With the exception of exhaust temperature sensors and temperature sensors embedded in Electronic Boxes, any temperature sensor used to measure temperature of any fluid necessary to ensure the Power Unit functions correctly at all times (including but not limited to coolant, oil, fuel and air) will be classified as a regulatory sensor (reference item 22 Appendix C4).

C5.13.11 A maximum of one Knock Sensor per cylinder is permitted. This sensor must be an accelerometer-type.

C5.13.12 No sensor of any kind, designed or installed to measure or infer internal cylinder pressure, temperature, or to determine the heat release characteristics will be permitted, with the exception of:

- the standard Knock Sensors permitted by Article C5.15.11 with standard signal processing by the FIA Standard ECU.
- The engine crankshaft speed sensors connected to the FIA Standard ECU, for the sole purpose of detecting misfire, and subject to FIA approval of the associated software.

Any other sensor which is incidentally capable of measuring or inferring internal cylinder pressure, temperature, or determining the heat release characteristics must have an attenuation of no less than 40dB above 1kHz at any point in the measurement chain and will be subject to the homologation required by Article 8.

Exceptionally, each Power Unit may be fitted with up to six internal cylinder pressure sensors during pre-season TCC days, but only if the Power Unit used is supplied by a PU Manufacturer who is in its first year of supplying Power Units compliant with those Regulations. These sensors must not be used for control purposes.

C5.13.13 The ICE coolant pressure must be measured by a sensor positioned next to the pressure relief valve defined in Article C5.22.1. This sensor is classified as a regulatory sensor (reference item 23 Appendix C4), and its installation and connectivity to the FIA SECU must be approved by the FIA.

C5.14 Engine high rev limits

Engine high rev limits may vary for differing conditions provided all are contained within a band of 750rpm. However, a lower rev limit may be used when:

©2026 Fédération Internationale de l'Automobile

a. The Gearbox is in neutral.

b. Stall prevention is active.

c. The driver Clutch request is greater than 95% of the total available travel of the driver Clutch actuation device, used only to protect the engine following a driver error.

d. An engine protection is active.

e. The bite point finder strategy is active.

f. The safety car is deployed or during the formation lap.

Except for the above conditions, Power Unit actuators may not be used to artificially control the Power Unit speed or alter the Power Unit response in a rev range more than 750rpm below the final rev limit.

C5.15 Starting the engine

The car must be fired up with its on-board system (MGU-K) at any time.

C5.16 Stall prevention systems

If a car is equipped with a stall prevention system, and in order to avoid the possibility of a car involved in an accident being left with the engine running, all such systems must be configured to stop the engine no more than ten seconds after activation.

The sole purpose of such systems is to prevent the engine stalling when a driver loses control of the car. If the car is in second gear or above when the system is activated multiple gear changes may be made to either first gear or neutral, under all other circumstances the Clutch alone may be activated.

Each time such a system is activated the Clutch must be fully disengaged and must remain so until the driver de-activates the system by manually operating the Clutch with a request greater than 95% of the total available travel of the drivers Clutch actuation device.

C5.17 Energy Recovery System (ERS)

C5.17.1 The system will be considered shutdown when no High Voltage will be present on the portion of the HV DC Bus located on the CU-K side of the ES main contactors, across any capacitor belonging to the CU-K or outside of the RV-PU-ERS.

It must be possible to shut down the ERS by all the following means:

a. The driver Master Switch required by Article C8.7.1.

b. The handles required by Article C8.7.2.

c. The CDS button required by Article C9.3.

The shutdown process must take no longer than two seconds from activation and must be started immediately when the electrical circuits to the ignition are cut off by any of the means described in articles C8.7.1, C8.7.2, or when the CDS, defined in Article C9.5, is activated.

C5.17.2 The ERS must shut down when the FIA Standard ECU initiates an anti-stall engine shut off.

©2026 Fédération Internationale de l'Automobile

C5.17.3 All cars must be fitted with two ERS status lights which:

a. Have been supplied by an FIA designated manufacturer and fitted to the car in accordance with the instructions in the document FIA-F1-DOC-043.

b. Are in working order throughout the Competition.

c. Must remain powered for at least 15 minutes following the start of the shutdown process. The FIA ADR internal battery will be responsible for power supply to those lights once the ERS is shutdown.

d. Are marked with a "HIGH VOLTAGE" symbol according to ISO3864 of at least 30mm along the triangle side and no more than 50mm away from the lights.

~~**C5.17.4** All cars must be fitted with one ERS Status Buzzer unit which:~~

~~a. Have been supplied by an FIA designated manufacturer and fitted to the car in accordance with the instructions in the Appendix to the Technical and Sporting Regulation.~~

~~b. Are in working order throughout the Competition.~~

~~c. Remains powered for at least 15 minutes following the start of the shutdown process. The FIA ADR internal battery will be responsible for the power supply to the unit once the ERS is shutdown.~~

Removed from 2027 regs

C5.17.4 All cars must provide signals regarding the current car operating safety status to the FIA ADR in order to facilitate control of the ERS status lights ~~and ERS Status Buzzer unit~~. The status of the car must be based at least on the insulation measurement, cells voltage, cells temperature, contactors and the systems defined in C5.23.4. The systems which provide these signals managed by the BMS must remain powered and working 15min after the shutdown process has been started. They must be connected to a source of energy independent of the ES and ensure that these systems remain powered in the event of reasonably foreseeable ES issues.

From 2026 Section C – Apx.C7

C5.17.5 The Maximum Working Voltage on the car must never exceed 1000V.

C5.17.6 The following elements of the Power Unit must be fitted inside the ES Main Enclosure installed within the ERS Reference Volume (RV-PU-ERS):

a. ES elements as defined in items 35 (ES) and 38 (HV elements) of Appendix C4.

b. The HV safety elements and sensors defined in items 36 (DC sensor, IMD) and 37 (safety devices) of Appendix C4.

c. The DC-DC Unit and its connection to the ES HV DC bus. Includes active parts, enclosure, brackets and supports.

d. CU-K. Includes active parts, enclosure, brackets and supports.

©2026 Fédération Internationale de l'Automobile

e. HV DC connections between ES and CU-K/DC-DC Unit. Includes all conductors, insulation, EMC screening, mechanical and thermal shielding.

C5.17.7 In addition to the components listed in Article C5.19.7, the following elements may also be fitted within the ES Main Enclosure:

a. Low voltage Power Distribution Board (PDB).

b. PU Electric pump Driver units and non ICE-mounted ERS cooling systems as defined in item 59 of Appendix C4.

c. Low Voltage systems passive protection devices - Fuse box.

d. Low Voltage looms exclusively used: for PU functionalities or power supply to non-PU devices.

e. General electrical devices exclusively used for PU functionalities, as defined in item 42 of Appendix C4

With the exception of wiring or any mechanical supports for these components, no additional elements may be fitted in the ES Main Enclosure.

C5.17.8 The minimum mass for the ES Main Enclosure PU Mass group elements as defined in Appendix C4 is 35.0kg. The procedure which will be used to determine this value may be found in the document FIA-F1-DOC-105.

C5.17.9 Any significant debris resulting from a failure of the elements located inside the RV-PU-ERS and defined in Appendix 3 items 26 (MGU-K) and 27 (MGU-K Mechanical Transmission) must be contained by and within the housing(s) hosting those parts. Documents demonstrating compliance with this requirement must be part of the PU Manufacturer homologation dossier. Additional guidance may be found in the document FIA-F1-DOC-044.

C5.18 MGU-K

C5.18.1 The MGU-K must be mechanically fixed to the Survival Cell, the ICE or both.

C5.18.2 Under normal operating conditions all MGU-K rotating parts must be permanently mechanically linked to the ICE with a fixed speed ratio to the crankshaft. The MGU-K and its drive axis must be parallel to the crankshaft axis.

C5.18.3 All mechanical power to and from the MGU-K must pass through a single shaft to the MGU-K transmission. The connection to the ICE crankshaft must be ahead of X_{PU}=100.

C5.18.4 An in-line, passive, dissipative energy torque limitation device may be incorporated in this link which temporarily allows the speed ratio to change for the sole purpose of protecting the components from dynamic torque overshoots. This device may only act above 520Nm when referred to crankshaft speed.

C5.18.5 The relative rotational speed between any two parts of the MGU-K may not exceed 60,000rpm.

C5.18.6 The thickness of the stack magnetic soft alloy laminated sheets may not be less than 50µm.

C5.18.7 Depending on where the MGU-K Mechanical Transmission is located, the total mass of the MGU-K "PU Mass group" elements as referred to in Appendix C4 must be no less than the values defined below:

©2026 Fédération Internationale de l'Automobile

a. If all of the speed ratio of the MGU-K Mechanical Transmission is located in the RV-PU-ERS the total mass of the MGU-K must be no less than 20.0kg.

b. If all of the speed ratio of the MGU-K Mechanical Transmission is located in the RV-PU-ICE the total mass of the MGU-K must be no less than 16.0kg.

c. If part of the speed ratio of the MGU-K Mechanical Transmission is located in both the RV-PU-ICE and the RV-PU-ERS the total mass of the MGU-K must be no less than 18.0kg.

The total mass of item 29 (MGU-K torque sensor) and item 31 (K torque sensor shaft and mechanical connection between MGU-K and ICE) must be allocated to either the MGU-K or the ICE to assess compliance with this article and article C5.5.1.

C5.18.8 All rotating parts of the MGU-K and its mechanical transmission must have a fixed inertia by design. Any system other than that permitted by article C5.18.4, the effect of which is to vary the inertia, is prohibited.

C5.18.9 The elements defined in item 31 (MGU-K torque sensor shaft) of Appendix C4 must be dismountable from their respective PU elements without breaking any FIA permanent seal.

C5.19 Energy Store

C5.19.1 Only cells approved by the FIA Technical Department may be used in the ES. Subject for provision of the Article C18.2.5, the approval of the FIA Technical Department is conditional upon the PU manufacturer, intending to use such parts during a Championship season undertaking not to conclude any Exclusivity Agreement for the supply of such parts with the supplier of these parts. The approval request form must be sent by the PU Manufacturer to the FIA before the 1st of November of the preceding year.

C5.19.2 Solely a single specification of cell may be homologated, including the same exiting position of the cell connection terminals (Cell Tabs - Article C5.2.26). The Cell Tabs may have different shapes for integration purposes inside the ES.

C5.19.3 Any non-ERS energy storage and components supplied by it will be considered an ancillary and subject to Article C5.13.1.

C5.19.4 A diode must be fitted, in series, at the DC-DC Unit positive high voltage pole to ensure that electrical energy cannot flow from the DC-DC Unit into the ES. This must be guaranteed by design and verifiable by inspection.

C5.19.5 The DC-DC Unit HV DC Bus branch must have a DC-DC Unit fuse, and, additionally, DC-DC Unit relay(s) if connected on the ES side of the ES Main contactors. Those protective devices will insulate the DC-DC Unit from the HV DC Bus DC+ and DC- poles and protect the installation in case of short circuit.

The DC-DC Unit relay(s) must provide a dielectric strength:

a. between the relay control circuit and any of the High Voltage contacts and;

b. across High Voltage contacts, when the High Voltage circuit is open.

For each of (a) and (b) above:

©2026 Fédération Internationale de l'Automobile

c. A dielectric withstanding voltage test must be performed with a DC voltage at least equal to the ES maximum DC voltage plus 1200V. The device must withstand the DC voltage for 60 seconds with a leakage current lower than 1mA and without flashover. The test must be performed on both HV terminals polarities if solid-state relays are used.

d. The electrical resistance measured by applying a DC voltage of 500VDC when the circuit is open must be higher than 50MΩ.

Once commanded to open, the DC-DC Unit relays must be able to keep the DC-DC Unit insulated from the ES HV DC Bus branch.

C5.19.6 With the exception of the ES safety systems, the ES Cells defined in C5.2.25 are the only energy storage source allowed in the ES.

C5.20 ES design and installation

C5.20.1 High Voltage must not be present or accessible by any reasonable means between the ES Main Enclosure and any ES off-board charging connector when the off-board charger is not connected.

C5.20.2 No High Voltage is permitted outside of the RV-PU-ERS, except:

a. For the High Voltage inside the power box where the boost converter can generate up to 80V DC.

b. When an off-board charger is connected to charge or discharge the ES.

C5.20.3 The ES must be equipped with a BMS which:

a. Must detect internal faults and must trigger power reduction delivered from/to the battery or shutdown the ERS if it considers that the ES is operating unsafely.

b. Must be capable of reducing the voltage dispersion between each cell to its minimal level without breaking any FIA seal.

c. Must only be capable of consuming energy and cannot transfer energy from any PU-CE into the ES. This must be guaranteed by design and verifiable by inspection.

C5.20.4 The ES must be equipped with a fuse to protect the system in case of a short circuit. The fuse shall be located as close as possible to the cells.

The fuse must be tested and demonstrated to work in realistic load cases.

C5.20.5 The ES must have at least two contactors, one per positive and negative pole. Those ES main contactors must insulate the CU-K from the High Voltage parts of the ES once the shutdown process is completed.

Contactors must provide a dielectric strength:

a. between the contactor's control circuits and any of the High Voltage contacts and;

b. across High Voltage contacts, when the High Voltage circuit is open.

For each of (a) and (b) above:

©2026 Fédération Internationale de l'Automobile

c. A dielectric withstanding voltage test must be performed with a DC voltage at least equal to the ES maximum DC voltage plus 1200V. The device must withstand the DC voltage for 60 seconds with a leakage current lower than 1mA and without flashover.

d. The electrical resistance measured by applying a DC voltage of 500VDC when the circuit is open must be higher than 50MΩ.

Once commanded to open, contactors must be able to keep the High Voltage circuit open.

The contactors must be tested and demonstrated to work in realistic load cases, as described in the document FIA-F1-DOC-045.

C5.20.6 Only Fuses and Contactors for ERS application approved by the FIA Technical Department will be accepted. The approval of the FIA Technical Department is conditional upon such parts being available on a non-exclusive basis and under normal commercial terms to all F1 Teams. The approval request form must be sent by the component supplier to the FIA before the 1st of November of the year preceding the year of introduction.

C5.20.7 In addition to the contactors mentioned in C5.20.5, the ES HV DC+ and DC- poles must be capable of being isolated from the PU-CE consumers by means of a manual action(s). The operator must be able to perform the manual operation(s) before opening any ERS-K Phase Conductors connection or interface giving access to Live Parts while the ERS is fitted to the car.

C5.20.8 Interfaces must be present on the ESME and may be present on the MGU-K to allow the connection of the ERS-K Phase Conductors between the ESME and the MGU-K. Should such interfaces not be present on the MGU-K then the parts that fulfil the function of the ERS-K Phase Conductors will be considered to be part of the MGU-K.

C5.20.9 The ES Main Enclosure must be equipped with a gas evacuation system which in case of ES Cell(s) venting or electronic components explosion prevents irreversible mechanical damage to the ESME. The design and operating conditions of such a system are of responsibility of each PUM and must be detailed in their respective FMEA. This venting system must be approved by the FIA Technical Department before the 21st of March of the year preceding the year of introduction.

C5.20.10 The ES Main Enclosure material(s) must satisfy a minimum fire protection equivalent of UL94 V0 unless the ES Cells are proven to not be susceptible to self-heating phenomenon. A document demonstrating compliance with this article must be included in the PU Manufacturer homologation dossier. Guidance on how to demonstrate that ES Cells aren't prone to thermal runaway behaviour may be found in the document FIA-F1-DOC-046.

C5.20.11 The ES must have only two poles, the ES HV DC+ and ES HV DC-, that are connected to the HV DC Bus. Additionally, the CU-K, the DC-DC Unit and any other PU-CE may only be connected to the HV DC bus via the ES HV DC+ and ES HV DC- poles.

C5.21 ERS General electrical safety

C5.21.1 Principles

a. A single point of failure of the electric system or ERS cannot result in a person being exposed to a Live Part.

©2026 Fédération Internationale de l'Automobile

b. The components used cannot cause injury under any circumstances or conditions, whether during normal operation or in reasonably foreseeable cases of malfunction.

c. If a single fault can predictably generate multiple failures, they must be considered as a single point of failure.

C5.21.2 Protection of cables, lines, connectors, switches, electrical equipment

The following design practices must be adhered to for all electrical parts external to the ES Main Enclosure or accessible and which operate at High Voltage:

a. Protection against electrical shock via Basic Insulation combined with equipotential bonding, Double Insulation or Reinforced Insulation

b. Protection against risks of mechanical damage

c. Parts should be secured with cable guides, enclosures and conduits if exposed to stress (mechanical, vibration, thermal)

d. Each cable must be rated to the respective circuit current and must be insulated adequately for the environment and operating conditions

e. Sections of looms containing High Voltage wiring must be coloured orange

f. Connectors must be IP2X when not connected and IP65 when mated. The compliance concerning the Ingress protection rating must be demonstrated via a test performed by a 3rd part laboratory, according to IEC60529 or ISO20653.

g. A connector plug must physically only be able to mate with a single correct socket of any sockets within reach

h. Comply with creepage and clearance distances according to IEC-60664. Connectors which are opened in the garage must be considered PD3 or higher. Clearance and creepage requirements can be verified by safety tests proposed in IEC-60664-1 session 6.

i. If, under the provisions of Article C5.20.1, the MGU-K is fixed to the ICE, the PU manufacturer must provide proof that the ERS-K phase conductors and connectors would not lead to exposed High Voltage in case of foreseen damage conditions.

C5.21.3 The ES Main Enclosure, MGU-K and any HV box residing outside the ES main enclosure must be marked with a "Danger High Voltage" symbol according to ISO 7010. In addition to that, at least 70% of the ES Main Enclosure external surface must be orange coloured. With the exception of RAL 2007, any RAL colour code within the range from RAL 2003 to RAL 2011 may be used.

C5.21.4 All ERS High Voltage conductors outside of the ES Main Enclosure must be equipped with:

a. A system to prevent High Voltage on the CU-K side of the ES contactors when ERS-K Phase Conductors are not connected or incorrectly mated. This system must be in working order throughout the Competition, whenever ERS elements are powered. In the event of detection of any of those conditions, actions must be immediately taken to ensure safe operation. The list of actions must be pre-defined in a Failure Mode and Effect Analysis provided to the FIA by each F1 Team. To avoid spurious detections a software debounce of maximum one second may be used.

©2026 Fédération Internationale de l'Automobile

b. A system to allow detection of insulation faults or damaged High Voltage lines by an isolation monitoring device.

C5.21.5 To mitigate the risk failure mode where a High Voltage is AC coupled onto the car's low voltage system, bonding is required for any system component to which a wire, cable or harness connects, or passes in close proximity, and which is able to conduct current by means of AC coupling.

The bonding must protect against short circuit currents generated by an insulation failure and low currents generated by capacitive coupling. It can be achieved using wires or conductive parts of an appropriate dimension.

Any components that require equipotential bonding will be connected to the Car Main Ground and the resistance of potential equalization paths must not exceed 5.0 Ω.

In addition, the resistance measured between any two Exposed Conductive Parts of the high voltage system must not exceed 0.1 Ω.

C5.21.6 An insulation monitoring device must be used to measure the insulation resistance between the *Car Main Ground* and the entire conductively connected *High Voltage* system. The insulation monitoring device (reference item 36 Appendix C4) will be used as the primary source of measurement and the DC sensor connected to the ES High Voltage negative DC pole as a backup source. They must be connected on the ES side of the contactors.

C5.21.7 The UN38.3 Energy Store transportation certification must be shared with the FIA during the homologation of each Energy recovery system specification.

C5.22 Oil and coolant systems and charge air cooling

C5.22.1 Coolant Header Tanks

Any header tank used on the car must be fitted with an FIA approved pressure relief valve which is set to a maximum of 3.75 barG, details of the relief valve may be found in the document FIA-F1-DOC-055. If the car is not fitted with a header tank, an alternative position must be approved by the FIA.

C5.22.2 Cooling Systems

The cooling systems of the Power Unit, including that of the air destined for combustion, must not intentionally make use of the latent heat of vaporisation of any fluid with the exception of fuel for the normal purpose of combustion in the engine as described in Article C5.9.3.

C5.22.3 Oil Tank

All cars must be fitted with a single Oil Tank. Oil, as defined in article C16.1.5, may only be contained by the Oil Tank and associated lines, elements defined in item 47 of Appendix C4, ICE, oil radiators/heat-exchangers, Turbo Charger, MGU-K and MGU-K Mechanical Transmission.

C5.22.4 Oil Tank Level Measurement

The Oil Tank must be fitted with an oil level sensor. The measurement of the oil level in the Oil Tank must be supplied to FIA at all times.

2021

C5.22.5 Oil Injection

The use of active control valves between any part of the PU and the engine intake air is forbidden.

C5.22.6 The use of an Auxiliary Oil Tank, or other forms of oil storage other than the single oil tank defined in C5.22.3 is not permitted. Accumulation of oil in other volumes (such as catch tanks) may be deemed acceptable only if incidental.

C5.23 Single ICE Mode

The Power Unit must be operated in a single ICE mode during each competitive lap in all sessions of a Competition, with the exception of free practice sessions. All details concerning policing of this article may be found in the document FIA-F1-DOC-054.

2027

ARTICLE C6: FUEL SYSTEM

Advisory Committee: TAC
Governance: F1 Commission / WMSC

C6.1 Fuel tanks

C6.1.1 The fuel tank must be a single rubber bladder conforming to or exceeding the specifications of FIA Standard FT5−1999, the fitting of foam within the tank however is not mandatory. A list of approved materials may be found in the document FIA-F1-DOC-036.

C6.1.2 With the exception of the fuel out of the Survival Cell permitted under Article C5.9.6, all fuel on board the car must be stored within the following limits:

a. Ahead of X_{PU}=0.

b. Rearward of RS−FWD−FUEL−LIMIT.

c. Inboard of Y=450.

C6.1.3 No fuel bladders shall be used more than 5 years after the date of manufacture.

C6.1.4 All fuel tanks must be fitted with a pressure relief valve to prevent overpressure, and with a fuel tank pressure sensor as specified in the diagram of Article C6.6.4. The FIA may request F1 Teams to demonstrate that the specification of all relevant parts of the fuel tank, and the strength of the surrounding structure, are consistent with the pressure that the pressure relief valve is set to.

C6.1.5 The maximum internal pressure exerted on the fuel bladder must not exceed 1.0 barG.

C6.2 Fittings and piping

C6.2.1 The total area of apertures in the fuel bladder must not exceed 35 000mm^2.

Circular apertures smaller than 35mm diameter may be closed with a fitting, secured with a single threaded fastener on the full diameter of the opening, provided that this threaded fastener is provided with mechanical secondary locking.

All other apertures in the fuel bladder must be closed by hatches or fittings which must:

i. Be secured to metallic bolt rings bonded to the inside of the bladder.

ii. Have bolt hole edges no less than 5mm from the edge of the bolt ring, hatch, or fitting.

iii. Attach directly to the fuel bladder and have no part of the Survival Cell structure included in the closure.

iv. Be secured with multiple fasteners in such a way that the absence of any single fastener does not compromise the security of the closure.

2027

C6.2.2 Where the fuel bladder is attached to the Survival Cell, fixings must be designed so that if it is pulled away from the Survival Cell, the attachment will fail without compromising the integrity of the fuel bladder. For this assessment, the pull−out load for any fitting will be calculated from the clamp area between the fitting and the bladder (on one face of the bladder). Between a clamp area of 1650mm^2 and 9 500mm^2, the load will be a linear interpolation between points (1650mm^2, 11kN) and (9 500mm^2, 37.5kN). Below a clamp area of 1650mm^2, the load will be taken as 11kN. Above a clamp area of 9 500mm^2, the load will be taken as 37.5kN. No fitting may have a clamp area of less than 600 mm^2.

C6.2.3 All fuel lines between the fuel tank and the engine must have a self−sealing breakaway valve. This valve must separate at less than 50% of the load required to break the fuel line fitting or to pull it out of the fuel tank.

C6.2.4 No lines containing fuel may pass through the Cockpit.

C6.2.5 All lines must be fitted in such a way that any leakage cannot result in the accumulation of fuel in the Cockpit.

C6.2.6 All components containing fuel at a pressure greater than 10barG must be located outside the fuel tank.

C6.3 Fuel tank fillers

Fuel tank fillers must not protrude beyond the bodywork. Any breather pipe connecting the fuel tank to the atmosphere must be designed to avoid liquid leakage when the car is running, and its outlet must not be less than 250mm from the cockpit opening.

All fuel tank fillers and breathers must be designed to ensure an efficient locking action which reduces the risk of an accidental opening following a crash impact or incomplete locking after refuelling.

C6.4 Refuelling

C6.4.1 A cover must be fitted over any refuelling connector at all times when the car is running on the track. The cover and its attachments must be sufficiently strong to avoid accidental opening in the event of an accident.

C6.4.2 The fuel in a car must not be colder than the lower of: ten degrees centigrade below ambient temperature, or ten degrees centigrade, at any time when the car is running after leaving the F1 Team's designated garage area.

The fuel in any rig used to fill the car must not be hotter than the greater of: ten degrees centigrade above ambient temperature, or thirty-five degrees centigrade, at any time.

When assessing compliance:

a. The ambient temperature will be that recorded by the FIA appointed weather service provider one hour before any practice session or three hours before the Race or Sprint Session. and will be displayed on the timing monitors.

b. The temperature of the fuel (TFFMFuel) will be that recorded in the car by the Fuel Flow Meter.

©2026 Fédération Internationale de l'Automobile

C6.4.3 The use of any device on board the car to decrease the temperature of the fuel is forbidden. Any system or component that increases the temperature of the fuel by means not inherent to, or exceeding, those arising from the normal operation of the car is prohibited.

C6.4.4 Fuel may not be added to nor removed from a car during a Race.

C6.4.5 Any refuelling procedure must respect the provisions of Article B.1.6.9.

C6.5 Fuel draining and sampling

C6.5.1 F1 Teams must provide a means of removing all fuel from the car.

C6.5.2 F1 Teams must ensure that a 0.70 litre sample of fuel may be taken from the car at any time during the Competition.

After a practice session, if a car has not been driven back to the pits under its own power, it will be required to supply the above−mentioned sample plus the amount of fuel that would have been consumed to drive back to the pits. The additional amount of fuel will be determined by the FIA.

C6.5.3 It must be possible to take a fuel sample drawn from the fuel collector are as defined in the fuel system hydraulic schematic shown in Article C6.6.4. To facilitate fuel sampling the car must be equipped with a - Parker Stratoflex Slide-Lok -2 Nipple or the F1 Team must provide a suitable adaptor to connect an alternative fitting to this format. If an electric pump on board the car cannot be used to remove the fuel an externally connected one may be used provided it is evident that a representative fuel sample is being taken. If an external pump is used it must be possible to connect the FIA sampling hose to it and any hose between the car and pump must be −3 in diameter and not exceed 2m in length. Details of the fuel sampling hose may be found in the document FIA-F1-DOC-056.

C6.5.4 The sampling procedure must not necessitate starting the engine or the removal of bodywork (other than the nosebox assembly and the cover over any refuelling connector).

C6.6 Fuel System Hydraulic Layout

C6.6.1 Parts listed in Appendix C6 sections 6A and 6E are classified as OSC.

C6.6.2 The primer pump(s) and Fuel Flow Meter are SSC, the High Pressure Fuel Pump and the pressure and temperature sensors are SSPUC; as mandated by the FIA and specified in the following documents FIA-F1-DOC-003, FIA-F1-DOC-017, FIA-F1-DOC-018 and FIA-F1-DOC-019.

C6.6.3 All flexible pipes and hoses and their fittings between the primer pump and the High Pressure Fuel Pump are SSC, as mandated by the FIA. The specification and permitted lengths are given in the document FIA-F1-DOC-013. Rigid pipes and manifolds and their fittings may be used instead of flexible pipes and hoses up to the inlet of the Fuel Flow Meter. Rigid pipes and manifolds may also be used at the Fuel Flow Meter outlet but only for connection to the optional filter or to support the pressure and temperature sensor. Such rigid pipes and manifolds are classified as OSC.

C6.6.4 The hydraulic layout of the fuel system must functionally conform to the schematic given in the drawing below. Additional components (such as collector pressurisation system) are permitted, subject to the approval of the FIA if they are deemed necessary for the proper behaviour of the system.

Furthermore, fuel cell components, such as fuel cell pressurisation system and fill/drain hoses, are permitted provided they do not functionally interfere with the system shown.

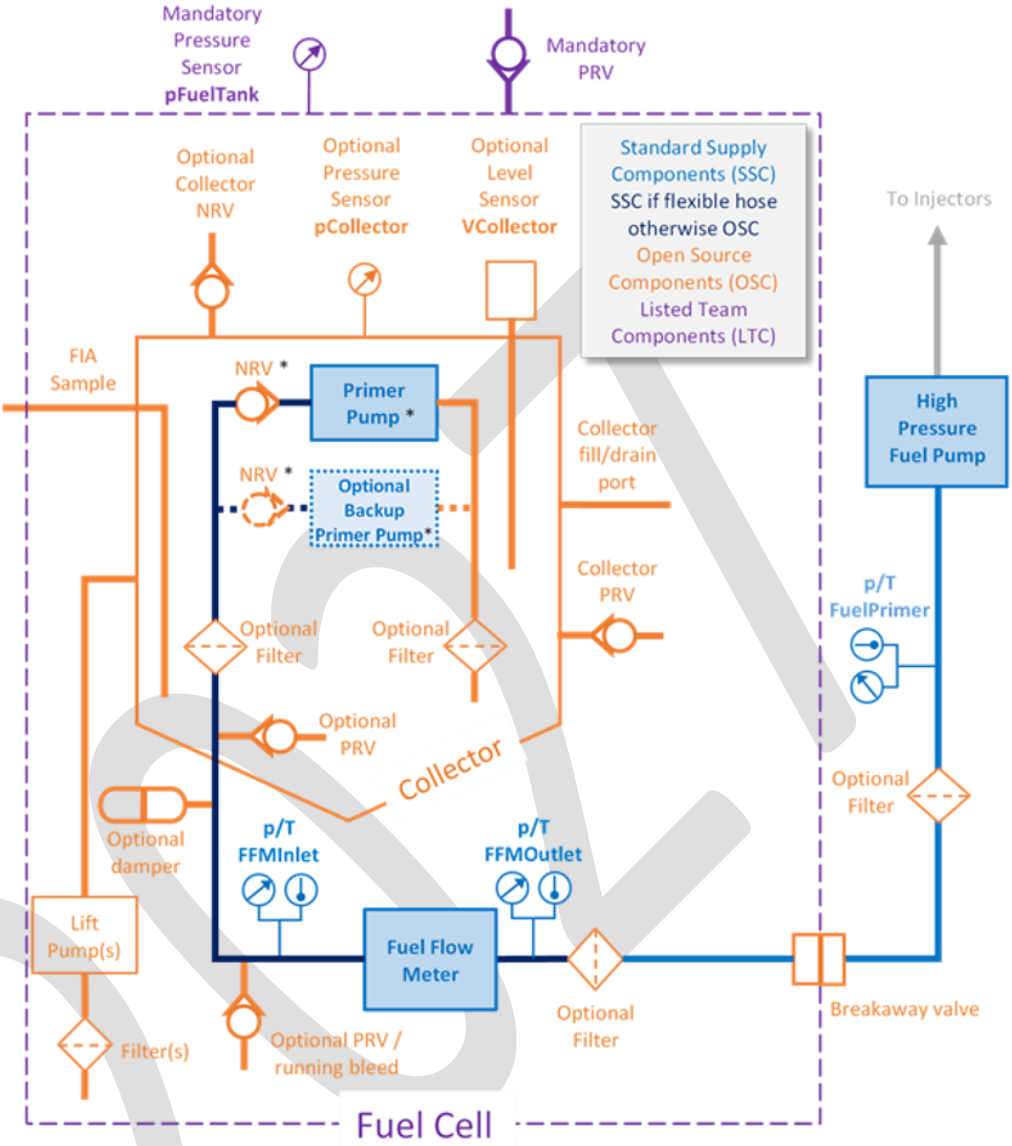

* The primer pump(s), the NRV(s), the damper, the filter and PRV downstream of the NRV(s) may be installed inside or outside the Collector.

C6.6.5 If a fuel pressure damper is fitted it must be fitted upstream of the Fuel Flow Meter described in article C5.9.3.

C6.6.6 The pressure of the fuel inside the collector may be increased relative to the pressure in the fuel cell volume by the lift pumps and/or either:

i. air pressure acting on the free surface of the fuel,

ii. or hydraulic oil or air pressure acting on a piston.

In all cases the increase in pressure in the collector must be for the sole purpose of maintaining the primer pump(s) inlet pressure above the cavitation point. And it must be demonstrated to the satisfaction of the FIA that any fluid used for this purpose cannot be used to change the composition of the fuel.

ARTICLE C7: OIL AND COOLANT SYSTEMS AND CHARGE AIR COOLING

Advisory Committee: TAC
Governance: F1 Commission / WMSC

C7.1 Location of lubricating oil tanks

All oil storage tanks must be situated between X_F=0 and X_{DIF}=150, and must be no further outboard than the lateral extremities of the Survival Cell.

C7.2 Location of lubricating oil system

No other part of the car containing lubricating oil may be situated behind X_{DIF} = 150 or outboard of Y=750.

C7.3 Oil and coolant lines

C7.3.1 No lines containing coolant or lubricating oil may pass through the Cockpit.

C7.3.2 All lines must be fitted in such a way that any leakage cannot result in the accumulation of fluid in the Cockpit.

C7.3.3 ~~No~~ Hydraulic fluid lines, excluding brake lines, must not ~~may~~ have removable connectors inside the Cockpit behind X_C=−1515.

C7.4 Heat exchangers

C7.4.1 Primary heat exchanger specification and technology

For Primary Heat Exchangers used on the car, the following restrictions apply:

a. The Heat Exchanger Core and header tanks must be made from aluminium alloy.

b. The Heat Exchanger Core must not be produced using additive manufacturing.

c. Heat Exchanger Tubes must have a wall thickness of at least 0.18mm.

d. The internal cross section of any Heat Exchanger Tube must have an area of at least 10mm^2, without considering structural stiffening ribs and the internal fins described in point (e) below.

e. Heat Exchanger Fins fitted inside the tubes must have a thickness of at least 0.06mm. Heat Exchanger Fins fitted between the tubes must have a minimum thickness of 0.05mm.

C7.4.2 Secondary heat exchanger specification and technology

Secondary Heat Exchangers must be constructed from metallic materials with the exception of any sealing or bonding.

©2026 Fédération Internationale de l'Automobile

ARTICLE C8: ELECTRICAL SYSTEMS

Advisory Committee: TAC
Governance: F1 Commission / WMSC

C8.1 Software and electronics inspection

C8.1.1 Prior to the start of each season the complete electrical and electronic system on the car must be examined and all on board and communications hardware and software must be inspected by the FIA Technical Department.

C8.1.2 The FIA must be notified of any changes prior to the Competition at which such changes are intended to be implemented.

C8.1.3 All re−programmable devices must have a mechanism that allows the FIA to accurately identify the software version loaded.

Acceptable solutions to verify the programmed software may be found in the document FIA-F1-DOC-033.

C8.1.4 All electronic units containing a programmable device, and which are intended for use at a Competition, must be presented to the FIA before each Competition in order that they can be identified.

C8.1.5 All on−car software versions must be registered with the FIA before use.

C8.1.6 The FIA must be able to test the operation of any compulsory electronic safety systems at any time during a Competition.

C8.1.7 F1 Teams may only run custom software that has been homologated by the FIA for their control applications hosted inside or outside the ECU described in Article C8.1.1.

Details of the homologation process can be found in the document FIA-F1-DOC-033.

C8.1.8 The number of versions used in any single championship season will be limited as shown in the table below. Figures are given per custom control application.

	~~2026 See Note 1~~	2027	2028	2029	2030
ECU F1 Team applications	~~5~~	~~4~~ 5	3	3	3
ECU PU applications	~~5~~	~~4~~ 5	3	3	3
ERS and PU−CE Applications	~~5~~	~~4~~ 5	3	3	3

A version will be deemed to have been used once the car's timing transponder has shown that it has left the pit lane.

Changes made solely for reliability, bug fix, compatibility with standard or other custom applications or changes requested by the FIA will not increase the version counter.

~~Note 1: for the 2026 Championship season only, the limits defined in the above table will apply starting from the fifth Competition.~~

©2026 Fédération Internationale de l'Automobile

C8.2 Control electronics

C8.2.1 All components of the Power Unit, fuel system, transmission systems, brake system, tyre pressure monitoring system and adjustable bodywork in addition to all associated actuators, must be controlled by the FIA Standard ECU.

The FIA Standard ECU may only be used with FIA approved software and may only be connected to the control system wiring loom, sensors and actuators in a manner specified by the FIA.

Additional information regarding the FIA Standard ECU software versions and setup may be found in the document FIA-F1-DOC-033.

C8.2.2 All ECUs, control sensors, and actuators will be homologated by the FIA. In addition, non-control sensors or units connected to the FIA Standard ECU must also be homologated. Details of the homologation process may be found in the document FIA-F1-DOC-033.

Each and every component of the control system will be sealed and uniquely identified and their identities tracked through their life cycle.

These components and units may not be disassembled or modified in any way and seals and identifiers must remain intact and legible.

C8.2.3 The control system wiring loom connectivity must be approved by the FIA.

All wiring looms must be built to ensure that each control sensor and each control actuator is electrically isolated from non-control sensors.

In general, there must be no active or passive electronic component in the control loom. Exceptions (e.g. termination resistors) must be approved by the FIA before use.

Additional wiring guidelines may be found in the document FIA-F1-DOC-033.

C8.2.4 If sensor faults or errors are detected by the driver or by the on–board software, back–up sensors may be used and different settings may be manually or automatically selected. However, any back–up sensor or new setting chosen in this way must not enhance the performance of the car. Any driver default turned on during the start lockout period may not be turned off before the end of that period.

C8.2.5 Pneumatic valve pressure may only be controlled via a passive mechanical regulator or from the FIA Standard ECU and its operation will be monitored by the FIA Standard ECU.

C8.3 Start systems

C8.3.1 Any system, the purpose and/or effect of which is to detect when a race start signal is given, is not permitted.

C8.3.2 The FIA Standard ECU will implement a “lockout” period after each race start or pit stop during which a number of Power Unit and transmission related functions will be frozen or disabled.

C8.4 Data acquisition

C8.4.1 To assist scrutineering, the FIA requires unlimited access to the following FIA Standard ECU information before, during and after any track session:

a. Application parameter configurations.

©2026 Fédération Internationale de l’Automobile

b. Logged data and events.

c. Real–time Telemetry data and events.

Throughout the Competition, the logging memory and events buffer may only be cleared by an FIA engineer.

The FIA must have the ability to connect to the FIA Standard ECU via an F1 Team–provided standalone equipment using an FIA laptop. The F1 Teams should make a jump battery available at all times during the Competition.

The F1 Teams should transfer the real–time Telemetry data and events on the FIA network as requested by, and in the format defined by, the FIA.

Prior to the Race or Sprint Session, the FIA Standard ECU data logger must be configured in such a way that allows logging of data for at least two hours and fifteen minutes without exceeding the size of the logger memory.

C8.4.2 Any data acquisition system, Telemetry system or associated sensors additional to those provided by the FIA Standard ECU and FIA ADR must be physically separate and electrically isolated from any Control Electronics with the exception of:

a. The primary regulated voltage supply.

b. The car system ground.

c. Communication links to the FIA Standard ECU, Telemetry unit and FIA ADR.

d. Power supplies, provided they are not used to power any Control Electronics, control sensors or actuators.

e. Time synchronisation lines.

f. Power Unit synchronisation lines.

g. An umbilical loom whose connector will remain disconnected when the car is moving.

Unless approved by the FIA, no junction box or break–out box may be shared between the FIA Standard ECU system and an F1 Team data acquisition system.

The use of any coupling, be it hard wired, magnetic, optical or other such link which allows the transmission of signals will not be considered as adequate isolation in the context of this Article.

C8.5 Telemetry

C8.5.1 All cars must be fitted with a car to F1 Team Telemetry system which has been manufactured by the FIA designated supplier to a specification determined by the FIA.

C8.5.2 Telemetry systems must operate at frequencies which have been approved by the FIA.

C8.5.3 F1 Team to car Telemetry is prohibited, with the exception of:

a. The FIA Marshalling System defined in Article C8.11;

b. Handshaking required by the car to F1 Team telemetry system defined in Article C8.5.1.

C8.5.4 The CCU Antenna must be mounted:

©2026 Fédération Internationale de l'Automobile

a. respecting the requirements of FIA-F1-DOC-022.

b. symmetrically about the plane Y = 0.

c. such that "Point X" lies:

i. between planes X_C = 350 and X_C = 750.

Ii. between planes Z = 830 and Z = 970.

d. such that "Surface Z" forms an angle between 0 and -20 degrees (nose up) to the plane Z = 0.

Furthermore, referring to FIA-F1-DOC-022, any part of the car (except the CCU Antenna) in the residual region defined below which intersects "Zone A" must be constructed of radio transparent material approved by the FIA designated supplier of the F1 Team Telemetry system:

e. above a Z-plane coincident with the lowest point of "Surface Z".

f. above a plane coincident with "Surface Z".

g. behind an X-plane lying 100mm ahead of "Point X".

C8.6 Driver inputs and information

C8.6.1 With the exception of voice radio communication, all signals associated with driver information and driver input devices must be generated by the FIA Standard ECU.

C8.6.2 Any single input device, including but not limited to switch, button, paddle or pedal, used by the driver must be connected to a single analogue or digital input of the FIA Standard ECU.

Exceptions will be considered to handle the following:

a. A spare clutch paddle sensor.

b. A spare accelerator pedal sensor.

c. A separate "kick–down" sensor which indicates that the accelerator pedal has been deliberately depressed past full travel.

d. Multiplexed shift signals.

e. A spare brake pressure and pedal sensor.

Any interface between such driver input devices and the FIA Standard ECU must be approved by the FIA.

C8.6.3 Any alteration of the driver's inputs may only be commanded by direct, deliberate and primary driver actions.

The logged raw signals from the FIA Standard ECU inputs must provide a true representation of the driver's actions.

C8.6.4 **Accelerator Pedal**

The only means by which the driver may control acceleration torque to the driven wheels is via a single foot (accelerator) pedal mounted inside the Survival Cell.

The design or installation of any component, surface finish, or feature, the purpose or effect of which allow specific points between the 0% and 100% calibrated references of the accelerator

©2026 Fédération Internationale de l'Automobile

pedal travel range to be identified by the driver or to assist the driver to hold a position are not permitted.

C8.7 Master switch

C8.7.1 The driver, when seated normally with the safety belts fastened and the steering wheel in place, must be able to cut off the electrical circuits to the ignition, all fuel pumps and the rear lights by means of a spark proof circuit breaker switch.

This switch must be located on the dashboard and must be clearly marked by a symbol showing a red spark in a white edged blue triangle.

C8.7.2 There must also be two exterior horizontal handles which are capable of being operated from a distance by a hook. These handles must be situated at the base of the main roll over structure on both sides of the car and have the same function as the switch described in Article C8.7.1.

The handles must enclose a circle of diameter 40mm and be red or yellow if the surrounding bodywork is predominantly red.

The handles must be marked with a letter "E" in red at least 80mm tall, with a line thickness of at least 8mm, inside a white disc of at least 100mm diameter with a red edge with a line thickness of at least 4mm.

C8.8 Driver radio

C8.8.1 All cars must be fitted with a voice radio communication system which has been manufactured by the FIA designated supplier to a specification determined by the FIA.

C8.8.2 Other than authorised connections to the FIA Standard ECU, any voice radio communication system between car and pits must be stand alone and must not transmit or receive other data. All such communications must be open and accessible to both the FIA and broadcasters.

C8.9 Accident analysis

For the purpose of accident analysis and driver rescue, during each Competition and all tests which are attended by more than one F1 Team, each car must be fitted with:

a. One FIA ADR;

b. One external 500g accelerometer;

c. One high speed camera;

and each driver must wear:

d. In−ear accelerometers;

e. Biometric devices subject to Article C8.9.5.

F1 Teams must use their best endeavours to ensure that all those parts are in working order at all times.

C8.9.1 FIA ADR

The FIA ADR must be fitted and operated:

a. In accordance with the instructions of the FIA.

©2026 Fédération Internationale de l'Automobile

b. With its centre plane no more than 25mm from Y=0 and with its top facing upwards.

c. With each of its 12 edges parallel to the coordinate system defined in Article C2.1.

d. In a position within the Cockpit which is readily accessible at all times from within the Cockpit without the need to remove plank or floor.

e. Positioned so that the entire unit lies:

either

i. Behind RV−COCKPIT−DRIVER, between X_C = −475and X_C = 100 and below Z=440, with its connectors facing forward,

or

ii. Ahead of RV−COCKPIT−DRIVER, behind X_C = −1075 and below Z=250, with its connectors facing either forward or rearward.

f. Via anti−vibration mountings giving a clearance of 5mm to all other objects.

g. In order that the download connector is easily accessible when the driver is seated normally and without the need to remove bodywork.

h. Within the operating limits specified by the supplier, in particular the maximum temperature limits.

The FIA ADR must be powered from a nominally 12V supply such that its internal battery can be recharged at all times when the car's electronic systems are powered and when the car systems are switched off, but a jump battery or umbilical is connected.

Details of the connections to the FIA ADR may be found in the document FIA-F1-DOC-038.

C8.9.2 External accelerometer

The FIA ADR must be connected to one external 500g accelerometer which has been manufactured by a FIA designated supplier to a specification determined by the FIA.

The accelerometer must be fitted:

a. In accordance with the instructions of the FIA.

b. Within the Cockpit, solidly bolted to the Survival Cell using four 4mm bolts, with a body clearance of 5mm to all other objects.

c. With each of its 12 edges parallel to and matching the coordinate system defined in Article C2.1.

d. In order that the entire accelerometer body lies as close as possible to the plane Y=0 and within an axis−aligned cube with an internal diagonal bounded by points [X_C, Y, Z] [−500, −130, 0] and [−250, 130, 150].

e. In a position which is readily accessible at all times from within the Cockpit when the seat is removed.

Details of the accelerometer may be found in the document FIA-F1-DOC-028.

C8.9.3 High speed camera

Each car must be fitted with a high speed camera which has been manufactured by the FIA designated supplier to a specification determined by the FIA.

The camera must be fitted in accordance with the instructions of the FIA, details of which may be found in the document FIA-F1-DOC-029.

C8.9.4 In–ear accelerometers

Each driver must wear in–ear accelerometers which have been manufactured by the FIA designated supplier to a specification determined by the FIA.

C8.9.5 Biometric device

For the purpose of aiding driver rescue, the FIA may define biometric devices, to be worn by each driver and which have been manufactured by the FIA designated supplier to a specification determined by the FIA.

C8.10 Accident data

At any time following an accident or incident F1 Teams must make the FIA ADR available and accessible to the FIA. A representative of the F1 Team concerned may be present when data relevant to an accident or incident is being uploaded from the recorder. A copy of the data will be made available to the F1 Team.

Any conclusions as to the cause of an accident, or any data relevant to an accident, may only be published in the form of a report which has been agreed between the F1 Team concerned and the FIA.

C8.11 FIA Marshalling system

C8.11.1 All cars must be fitted with a marshalling system, comprising a car positioning system and a bidirectional race control to car communication system, which has been manufactured by the FIA designated supplier to a specification determined by the FIA.

No other parts which, in the opinion of the FIA are capable of performing a similar function, may be fitted to any car.

C8.11.2 Car Positioning Unit

The Car Positioning Unit must be positioned in the forward part of the Survival Cell respecting the requirements of FIA-F1-DOC-023.

C8.11.3 Details of the marshalling system may be found in the document FIA-F1-DOC-023.

C8.12 Track signal information display

All cars must be fitted with red, blue and yellow cockpit lights, supplied as part of the FIA Standard ECU, the purpose of which are to give drivers information concerning track signals or conditions. The lights must be fitted directly in the driver's normal line of sight.

©2026 Fédération Internationale de l'Automobile

C8.13 Impact warning system

In order to give rescue crews an immediate indication of accident severity each car must be fitted with a warning light which is connected to the FIA ADR.

The light must face upwards and be recessed into the top of the Survival Cell and be positioned according to Drawing 10 of Appendix C3.

Details of the light and its control system may be found in the document FIA-F1-DOC-031.

C8.14 Installation of electrical systems or components

C8.14.1 Exceptionally, each car may be equipped with a maximum of five test sensor installations, which do not comply with Article C3, during P1 and P2, provided:

a. They could not materially affect the outcome any of the impact tests described in Article C13.

b. They lie entirely within an axis−aligned cuboid with an internal diagonal bounded by points [X_F =−1300, −925, −200] and [X_R = 1000, 925, 1100].

c. No part of any sensor may lie above a triangular surface with vertices at [X_C = −200, 0, 655], [X_F = -1300, 1225, 655] and [X_F = −1300, −1225, 655].

d. They do not obstruct on−board camera views.

e. If attached to either the RIS or the FIS, they may only use fixings that were present at the homologation of the structure.

Any such test sensor installations do not need to be homologated.

The FIA technical delegate must be notified of any intended use of such non-C3 compliant test sensor installations prior to the Competition at which they are first used.

C8.14.2 F1 Teams must be notified of any changes to the installation instructions for any FIA specified systems or components before 1 March of the previous season.

C8.14.3 Notwithstanding the provisions of Article C8.14.1, the use in testing of any system designed to adjust the ride height of the car in a way that is not compliant with Article C10 is prohibited.

C8.15 Timing transponders

All cars must be fitted with two timing transponders supplied by the officially appointed timekeepers. These transponders must be fitted in strict accordance with the instructions detailed in the document FIA-F1-DOC-022. F1 Teams must use their best endeavours to ensure that the transponders are in working order at all times.

C8.16 Cameras and camera housings

C8.16.1 At all times throughout the Competition, cars must be equipped with six positions in which cameras or camera housings can be fitted. Referring to Drawing 2 of Appendix C3, all cars must carry:

a. a camera in positions 4, and 5.

b. a camera or camera housing in positions 1 and 2

If requested by the Commercial Rights Holder, a car must carry;

©2026 Fédération Internationale de l'Automobile

c. a camera fitted in the driver's helmet and pointing forward,

d. a camera in position 6.

C8.16.2 Details concerning the technical specification of all cameras may be found in the document FIA-F1-DOC-022.

C8.16.3 With the exception of the position in the driver's helmet, camera housings, when used, must be fitted in the same location as cameras, and satisfy all the relevant regulations. They must be identical in size, shape, and mass to the camera in lieu of which they are fitted, and must be supplied by the relevant F1 Team. Details concerning the shape and mass of all camera housings may be found in the document FIA-F1-DOC-022.

Any decision as to whether a camera or camera housing is fitted in those positions will be by agreement between the relevant F1 Team and the Commercial Rights Holder.

If a car is not required to carry either a camera in the helmet of the driver, or a camera in position 6, ballast of 0.35 kg must be securely fitted in the location of the Helmet Camera Processing Unit.

C8.16.4 F1 Teams must be notified of any changes to the camera or transponder installation instructions before 30 June of the previous season.

C8.16.5 Any camera fitted in positions 2, 3 or 4 shown in Drawing 2 of Appendix C3 must be mounted in order that its major axis does not subtend an angle greater than 1° to the plane Z=0, and its lateral axis is normal to the plane Y=0.

C8.16.6 **Position 1**

Any camera fitted in position 1 must be fitted above the Survival Cell, forward of the cockpit opening, rearwards of the forward attachment of the Secondary Roll Structure. and symmetrically with respect to the plane Y=0, with the camera pointing towards the driver. The electronic conditioning unit for this camera must be positioned within the Survival Cell and in accordance with the document FIA-F1-DOC-022.

C8.16.7 **Position 2**

On the left-hand side, a camera, or camera housing of the same mass must be fitted.

On the right-hand side, a lightweight camera housing, or a diagnostic camera defined in Article C3.18.15 (if required by the FIA) must be fitted symmetrically to the camera on the left-hand side.

The entire camera or housing in position 2 must lie within RV−CAMERA−2.

The camera fitted in position 2 shown in Drawing 2 of Appendix C3 must be mounted in order that its major axis where passing through the centre of the camera lens does not intersect any part of the car lying forward of the camera.

Any part provided by the F1 Team for the purpose of aligning the camera or housing in position 2 correctly will be considered part of the camera provided it does not exceed 25mm in width and is being fitted for that sole purpose.

©2026 Fédération Internationale de l'Automobile

C8.16.8 Position 3 (FIA Monitoring)

The camera fitted in position 3 (FIA Monitoring Camera) must be able to be mounted, symmetrically about Y=0, in order that its forward−most point is situated between $X_C = 0$ and $X_C = 300$ and between Z=840 and Z = 900. The inner face of the camera should be between Y = 120 and Y = 170.

Any part provided by the Competitor for the purpose of aligning the camera in position 3 must be an extrusion of the camera unit profile. A radius of up to 10mm will be permitted where this component meets the bodywork or survival cell.

C8.16.9 Position 4

The camera fitted in position 4 must be mounted in order that its forward−most point is forward of $X_C = 80$.

C8.16.10 Position 5

The camera fitted in position 5 must be mounted, symmetrically about Y=0, with the lens centre forward of $X_C = -1250$ and with its lower surface at an angle no greater than 6° to the plane Z=0. In order to not impinge on its 360deg image, any shrouding or cutout should be no higher than "Shoulder X", as defined in the document FIA-F1-DOC-022.

C8.16.11 Position 6

The camera fitted in position 6 must be mounted within the Rear Impact Structure with the face of the lens pointing rearwards at an angle no greater than 1° to the plane X=0.

C8.17 Electromagnetic radiation

Electromagnetic radiation between 2.0 and 2.7GHz is forbidden save with the written consent of the FIA.

C8.18 Sensor signals

Any system, device or installation which is contrived or operated in a way to alter the measurement or the signal of a sensor used by the FIA to establish compliance with the Regulations is forbidden.

©2026 Fédération Internationale de l'Automobile

ARTICLE C9: TRANSMISSION SYSTEM

Advisory Committee: TAC
Governance: F1 Commission / WMSC

C9.1 Fundamental provisions

C9.1.1 Transmission type

The transmission may only drive the two rear wheels.

C9.1.2 Traction control

No car may be equipped with a system or device which is capable of preventing the driven wheels from spinning under power or of compensating for excessive torque demand by the driver.

Any device or system which notifies the driver of the onset of wheel spin is not permitted.

C9.2 Clutch control

C9.2.1 Clutch operating devices must be in the form of paddles, which comply with the following principles:

a. There should be a maximum of two, mounted on the steering wheel for direct access in all circumstances.

b. They should be of pull–type, opening the Clutch when pulling the paddle towards the driver.

c. Their travel should be in a plane nominally normal to the face of the steering wheel, with a maximum displacement of the driver's contact surfaces of 80mm between end stops.

d. They should have only a single degree of freedom.

e. Where two paddles are fitted, they must be a left and right handed pair, identical in function and ergonomics, mounted in a symmetrically opposite manner on either side of the steering wheel centre plane. For the avoidance of doubt, they must have the same mechanical travel characteristics and be mapped identically.

   No interaction between them or the associated FIA Standard ECU inputs will be permitted and, furthermore, F1 Teams must be able to demonstrate beyond any doubt that each of the paddles may only be operated with only one hand.

f. To ensure that the signals used by the FIA Standard ECU are representative of the driver's actions, each F1 Team is required to demonstrate that the paddle percentage calculated by the FIA Standard ECU does not deviated by more than ±5% from the physical position of the operating device measured as a percentage over its entire usable range.

   In that context, the physical position of the paddle will be measured at the location operated by the fingers.

g. The paddle is the only device the driver may use to control the clutch demand. The position signal must not be altered by any other object including any insert within the driver's glove.

C9.2.2 Designs which allow specific points along the travel range of the clutch operating device to be identified by the driver or assist the driver to hold a position are not permitted.

©2026 Fédération Internationale de l'Automobile

In order to prevent interaction between the clutch paddles and other driver control devices, at least one of the following arrangements must be respected:

a. When pulled to its maximum travel position, any clutch paddle should not reach further than the driver's contact surfaces of any other paddle, lever or switch in any of their positions.

b. The outboard 60% portion of any clutch paddle, measured from its mounting point to its outer edge by the driver's contact surface, should be a minimum of 50mm away over its entire travel range from any other paddle, lever or switch.

c. A clutch paddle should be separated from any adjacent paddle, lever or switch by a physical stop preventing any practical interaction between them by the driver. Such stop should be sized and shaped so that it cannot be used as a reference point during paddle operation.

In addition, other parts of the steering wheel or chassis should not be practically usable as reference points for the driver to identify or hold a specific position.

C9.2.3 The minimum and maximum travel positions of the clutch operating device must correspond to the Clutch fully engaged normal rest position and fully disengaged (incapable of transmitting any useable torque) positions respectively.

C9.2.4 Designs or systems which are designed to, or have the effect of, adjusting or otherwise influencing the amount, or rate, of engagement being demanded by the FIA Standard ECU, are not permitted, with the exception of minimal inherent hydraulic and mechanical properties.

C9.2.5 The amount by which the Clutch is engaged must be controlled solely and directly by the driver with the exception of:

a. Stall prevention.

b. Gearshifts.

c. Bite point finder where brake pressure, wheel speed and driver clutch demand safeguards are used.

d. De−clutch protections.

e. *Power train* protection on the track outside of any start lockout period or immediately following stall prevention activation only.

f. Test signals enabled only when the car is connected to the garage system.

When commanded by the driver, the amount of clutch engagement will be expressed in the FIA Standard ECU as torque at the rear axle by applying a gain of 5200Nm / 90% to the clutch paddle position between 5% and 95%.

In that case the clutch torque controller implemented in the FIA Standard ECU must be used. Except for the first 85ms following the initial step in clutch torque demand during a launch, the control error, calculated using the Power Unit output shaft torque sensor, must be contained in a band of ±150Nm when converted at the rear axle.

C9.2.6 When the clutch operating device is released from its maximum travel position it must return to its resting position within 50ms.

©2026 Fédération Internationale de l'Automobile

The maximum delay allowed, computed from the respective signals as recorded by the FIA ADR or FIA Standard ECU, between the clutch driver control input signal and the corresponding output demand being achieved is 50ms.

C9.2.7 Any device or system which notifies the driver of the amount of Clutch slip or engagement is not permitted.

C9.3 Clutch Disengagement System (CDS)

All cars must be fitted with a means of disengaging the Clutch. ~~for a minimum of fifteen minutes in the event of the car coming to rest with the engine stopped.~~ This system must:

a. be in working order throughout the Competition even if the main hydraulic, pneumatic or electrical systems on the car have failed.

b. disengage the clutch fully for a minimum of fifteen (15) minutes from the moment the clutch disengagement button is pressed.

c. ~~This system must also~~ shut down the ERS, as required by article C5.17.1.

Compliance with the above requirements must not be affected by any software-generated clutch disengagement request.

In order that the driver or a marshal may activate the system in less than five seconds, the button which operates it must:

d. Face upwards and be recessed into the top of the Survival Cell and be positioned according to Drawing 10 of Appendix C3.

e. Be designed in order that a marshal is unable to accidentally re−engage the Clutch.

f. Be marked according to Drawing 10 of Appendix C3.

C9.4 ~~Homologated~~ Gearbox Specification Control ~~and Component Classification~~

C9.4.1 ~~The design of the Driveline Components (with the exception of the gear ratios, for which the provisions of Article C9.6.2 apply), Gear−Change Components and Auxiliary Components must be homologated by each gearbox supplier before the start of the season following the season when they first supplied a Gearbox under these Regulations. The design must not be modified, except in exceptional circumstances, in subsequent seasons may only be modified as permitted under C9.4.2 or C9.4.3.~~

~~If requested by a Customer Team, the Supplying Team must supply a Gearbox to the specification that the Customer Team used prior to the Gearbox being homologated. This specification must be homologated and subsequently, may only be modified according to C9.4.3. This does not affect the upgrade that the Supplying Team is permitted to make under C9.4.2.~~

~~The Gearbox Case may be modified provided that the layout of the Driveline Components, Gear−Change components and Auxiliary Components is unchanged, except for a translation, as a group, in X.~~

Each Competitor must declare to the FIA every Gearbox Specification used during the Championship.

©2026 Fédération Internationale de l'Automobile

For the purposes of this Article, only components classified in Appendix C6 under references 3G and 3K shall form part of a Gearbox Specification.

For each declared Gearbox Specification it declares, a Competitor must provide:

a. a unique specification identifier

b. one or more associated Bills of Materials or equivalent parts-list definitions

c. the date and TTCS of first use

More than one Bill of Materials or equivalent parts-list definition may be associated with a Gearbox Specification identifier, provided that any differences between them are limited to modifications exempted under Article C9.4.2.

For each Competition, a Competitor shall declare to the FIA the Gearbox Specification identifier and the corresponding Bill of Materials or equivalent parts-list definition applicable to each Gearbox assembly used, fitted, carried as a spare or otherwise made available during that Competition.

Where a Gearbox assembly is supplied by another Competitor, any information required for that declaration which is controlled by the Supplying Team may be submitted either by the Competitor or directly to the FIA by the Supplying Team.

Each Competitor shall remain responsible for the accuracy and completeness of information submitted by it pursuant to this Article.

The Customer Team shall remain responsible for ensuring that each Gearbox assembly used by it corresponds to its declared Gearbox Specification identifier declared for that assembly pursuant to this Article.

C9.4.2 ~~A single upgrade to the Gearbox specification and layout will be permitted during this four-year period. Such This change is only being permitted between two consecutive Championship Seasons. This then will be the only Gearbox design that can be used subsequently in the Championship by the Supplying Team.~~

~~This upgrade must be made available to Customer F1 Teams, who may opt to continue with the original specification and upgrade to the latest specification in a subsequent year. Once a change has been made, the Customer F1 Team may not revert to an earlier specification.~~

Any modification to a component forming part of a Gearbox Specification, that is not listed below, constitutes a new Gearbox Specification and requires a new identifier.

The following modifications do not trigger a new Gearbox Specification:

a. fasteners, including bolts, studs, screws and nuts, having a nominal thread diameter not exceeding 14mm

b. washers, shims, spacers and threaded inserts

c. bushings, shell bearings, and rolling-element or spherical bearings listed in commercial catalogues

d. dowel pins, roll pins, retaining pins, circlips, rivets and shaft keys

©2026 Fédération Internationale de l'Automobile

e. O-rings, back-up rings, quad-rings, seals, gaskets and grommets listed in commercial catalogues or having a largest external dimension not exceeding 150mm

f. springs and anti-vibration mounts having a largest external dimension not exceeding 40mm

g. core plugs, bungs, pipe-retention brackets, keep plates, clamps and similar retention hardware whose principal purpose is not to transmit load or torque

h. cable ties and equivalent clamping or retention consumables

i. adhesives, labels and fluids

j. changes to tolerances, materials, heat treatments or surface treatments, provided that such changes do not affect the function, performance, installation requirements or interchangeability of the component.

k. refurbishment, polishing, reconditioning or restoration that returns a component to the declared design definition.

The FIA may require any information necessary to verify a declared Gearbox Specification or the applicability of an exemption listed above.

C9.4.3 ~~Modifications may be made to the homologated Gearbox in the following cases:~~

~~a. To resolve reliability problems.~~

~~b. For cost saving, at the start of each season.~~

~~c. In the case of materials, processes or proprietary parts becoming unavailable or having their use restricted for health and safety reasons.~~

~~In all cases, clear documentation justifying the change must be provided, prior approval must be obtained from the FIA, and the modification must not give any performance advantage. A summary of the modification will be circulated to all F1 Teams by the FIA.~~

When a new Gearbox Specification is created as a result of a modification falling outside the exemptions listed in Article C9.4.2, the Supplying Team must notify each Customer Team supplied by that Supplying Team as soon as reasonably practicable and, in any event before first use of that specification in a TTCS.

The notification must identify the new Gearbox Specification, summarise the components modified relative to the specification most recently supplied to that Customer Team, and state when the new specification will be made available under Article C9.4.6.

C9.4.4 At the first Competition of each Championship Season, the Gearbox Specification used by any Customer Team must be the same as that used by the Supplying Team, unless the Customer Team has notified both the Supplying Team and the FIA of an election under Article C9.4.5.

C9.4.5 A Customer Team may, in accordance with its supply agreement with the Supplying Team, elect to continue using or to adopt any Gearbox Specification made available to it by its Supplying Team under Article C9.4.6 until the end of the Championship Season immediately following that in which that Gearbox Specification was first used by the Supplying Team in a TTCS.

The Customer Team must notify both the Supplying Team and the FIA of the Gearbox Specification it has elected to use under this Article.

©2026 Fédération Internationale de l'Automobile

During that period, the Supplying Team must continue to make available, in accordance with the applicable supply agreement, the hardware, spare parts, information and any reliability-related or safety-related modifications necessary for the safe and compliant operation of that Gearbox Specification.

The right to use an elected Gearbox Specification applies only while ~~it~~ that specification remains compliant with these Regulations and capable of safe and reliable operation with the Power Unit specification and installation applicable to the Customer Team.

If the Supplying Team considers that the Gearbox Specification is no longer capable of such operation, the supplier must provide the Customer Team and the FIA with the technical reasons and supporting information as soon as reasonably practicable. The FIA may request the Supplying Team to provide directly to the FIA, and on a confidential basis, any supplementary information relating to that technical assessment.

C9.4.6 When a Supplying Team first uses a new Gearbox Specification in a TTCS, that specification must be made available to each Customer Team supplied by that Supplying Team no later than the sixth Competition counting from the Competition at which first use occurs, or before the first Competition of the following Championship Season, whichever occurs first.

A Customer Team may defer or decline adoption of that Gearbox Specification, subject to Article C9.4.5. If a subsequent Gearbox Specification is declared and made available before the first Competition of the following Championship Season, the Customer Team may adopt that specification without first adopting an intermediate specification.

For the purposes of this Article, "made available" means that the hardware, spare parts and information necessary for the legal installation and operation of the relevant Gearbox Specification are available to the Customer Team in quantities reasonably sufficient to operate its entered F1 Cars, together with all information reasonably required for that installation and operation, including any supplier-controlled information.

C9.4.7 Unless otherwise authorised by the FIA for reliability, safety or exceptional operational reasons, when a newly declared Gearbox Specification is first used in a TTCS, it must be fitted to at least one F1 Car entered by the supplying Team.

C9.4.8 Upon commencement of a new supply relationship, a Customer Team may exercise an election under Article C9.4.5 only in respect of Gearbox Specifications made available to it by its current Supplying Team during that supply relationship.

The rights and obligations arising between a Customer Team and its Supplying Team under Articles C9.4.5 and C9.4.6 apply only for the duration of their supply relationship and cease at the end of the final Championship Season covered by that relationship.

C9.4.9 The Gearbox, as defined in Appendix C1, is classified as TRC.

C9.5 Gearbox Dimensions

C9.5.1 Layout

The primary (lay) shaft must be concentric with the PU crankshaft centreline and must be driven at the same speed.

©2026 Fédération Internationale de l'Automobile

The secondary (main) shaft must lie within 30mm of Y=0, above the Primary Shaft and be parallel to it. The axes of the primary and secondary shafts must be between 90mm and 110mm apart.

The axis of any gear–change barrel must be above the axis of the secondary shaft.

The distance between the front lateral gear–tooth face of the forward–most forward gear ratio pair and the rear lateral gear–tooth face of the rearward–most forward gear ratio pair must be at least 175mm. The minimum distance must be respected by both the gears on the primary (lay) shaft and the gears on the secondary (main) shaft.

The axis of the final drive (at X_{DIF}=0) must be between X_R= −60 and X_R=60, between Z=260 and Z=280, and be between 390mm and 450mm behind the front lateral gear–tooth faces of both gears of the forward–most forward gear ratio pair.

The tip diameter of the final drive gear must be at least 205mm.

C9.5.2 **Mass**

The combined mass of driveline and gear–change components must be at least 22kg.

C9.6 Gear ratios

C9.6.1 The number of forward gear ratios must be 8. Continuously variable transmission systems are not permitted.

C9.6.2 Each F1 Team must nominate the forward gear ratios (calculated from engine crankshaft to drive shafts) to be employed within their Gearbox. These nominations must be declared to the FIA technical delegate at or before the first Competition of the Championship.

In the event the F1 Team obtains the Gearbox from another F1 Team as a TRC, the gear ratios used must be the same between those two F1 Teams unless the Customer Team opts to continue with the ratios used in the previous Championship Season.

During ~~2026~~ 2027 only, the nominated set of forward gear ratios may be changed once during the Championship Season and may involve changes to the gear ratio pairs defined in Article C9.6.3 and to the final drive. The F1 Team may revert to the original specification but must remain with this specification for the remainder of the Championship.

For the ~~2027~~ 2028 Championship Season and onwards, changes to the forward gear ratios under the provisions of this Article may involve changes to either the gear ratio pairs defined in Article C9.6.3, or to the final drive, but not both at the same time.

C9.6.3 No forward gear ratio pair may be:

a. Less than 12mm wide when measured across the gear tooth at the root diameter or any point 1mm above or below the root diameter. Above this area each side of the gear teeth may be chamfered by a maximum of 10˚. In addition, a chamfer or radius not exceeding 2.0mm may be applied to the sides and the tip of the teeth.

b. Less than 600g in mass (excluding any integral shaft or collar). If an integral shaft or collar is to be excluded the mass of this may be shown by calculation assuming the gear to be 12mm wide and the shaft geometry to be the same as that where slide on gears are used.

C9.6.4 Gear ratio pairs must be made from steel.

©2026 Fédération Internationale de l'Automobile

C9.7 Reverse gear

All cars must be able to be driven in reverse by the driver at any time during the Competition.

C9.8 Gear changing

C9.8.1 Automatic gear changes are considered a driver aid and are therefore not permitted.

For the purposes of gear changing, the Clutch and Power Unit torque need not be under the control of the driver.

C9.8.2 Gear changing is restricted during the following periods:

One gear change is permitted after the Race or Sprint Session has started and before the car speed has reached 80km/h, provided every gear fitted to the car is capable of achieving at least 80km/h at 15 000rpm.

C9.8.3 The minimum possible gear the driver is able to select must remain fixed whilst the car is moving.

Each individual gear change must be separately initiated by the driver and, within the mechanical constraints of the Gearbox; the requested gear must be engaged immediately unless over–rev protection is used to reject the gear shift request. Once a gear change request has been accepted no further requests may be accepted until the first gear change has been completed.

Multiple gear changes may only be made under Article C5.16 or when a shift to Gearbox neutral is made following a request from the driver.

If an over–rev protection strategy is used this may only prevent engagement of the target gear, it must not induce a delay greater than 50ms. If a gear change is refused in this way, engagement may only follow a new and separate request made by the driver.

Any de–bounce time used to condition driver gear change requests must be fixed.

C9.8.4 The maximum permitted duration for down changes and up changes is 300ms and 200ms respectively. The maximum permitted delay for the latter is 80ms from the time of the driver request to the original gear being disengaged.

The duration of a gear change is defined as the time from the request being made to the point at which all gear change processes are terminated. If for any reason the gear change cannot be completed in that time the car must be left in neutral or the original gear.

C9.8.5 Distance channel or track position is not considered an acceptable input to gearbox control.

C9.9 Torque transfer systems

C9.9.1 Any system or device the effect of which is capable of transferring or diverting torque from a slower to a faster rotating wheel is not permitted.

C9.9.2 Any device which is capable of transferring torque between the principal axes of rotation of the two front wheels is prohibited.

2027

C9.10 Driveshafts

Driveshafts must be made from steel. The bore, more than 150mm from the ends, must be of constant diameter. At one of the ends, the internal diameter of the final 150mm must be equal to or greater than the diameter of the bore of the constant diameter section.

C9.11 Structural Connection to Survival Cell

Any part which provides an additional load path, aside from the path through the studs defined under Art. C5.4.17, from the Survival Cell to the Gearbox Case is prohibited unless this is incidental to its principal purpose.

Furthermore, any such part must not provide a structural connection between this pair of assemblies beyond that which is reasonable for the safe and reliable fulfilment of its purposes.

2027

ARTICLE C10: SUSPENSION, STEERING SYSTEMS, WHEELS AND TYRES

Advisory Committee: TAC
Governance: F1 Commission / WMSC

C10.1 Legality Setup

The attitude of the Unsprung Mass, in relation to the Sprung Mass, for the assessment of its compliance to the Regulations.

An F1 Team must define a unique **"Legality Setup"** for the front axle and for the rear axle. These setups must have:

a. The Y_W axis parallel to the X=0 plane.

b. The Y_W axis subtending an angle of −3 and −1 degrees to the Z=0 plane for the front and rear axles respectively

c. The origin of the Wheel Coordinate System lying between Z=290 and Z=320 for the front axle and between Z=225 and Z=285 for the rear axle.

C10.2 Sprung suspension

C10.2.1 Cars must be fitted with Sprung Suspension.

C10.2.2 The suspension system of each axle (front and rear) must be independent from the other axle and so arranged that its response results only from changes in load applied to the wheels of that axle.

C10.2.3 The suspension system comprises of:

a. Outboard suspension: the suspension members connecting the uprights to the Sprung Mass, the upright and attachments, the wheel axles and bearings, wheel fasteners and the Complete Wheels.

b. Inboard suspension: the mechanical arrangement of the components that provide the vertical suspension travel response of the suspension system to the changes in load applied to the wheels.

The inboard suspension is considered to be part of the Sprung Mass, whereas the outboard suspension is considered to be part of the Unsprung Mass.

C10.2.4 Any powered device which is capable of altering the configuration or affecting the performance of any part of any suspension system is forbidden.

C10.2.5 No adjustment may be made to any suspension system while the car is in motion.

C10.2.6 On each axle, the state of its suspension system must be uniquely defined by the angular position, and angular velocity of its two rockers. Inertial and hysteresis effects are acceptable provided they are incidental.

In addition, the following systems or configurations are not permitted:

a. Any response of the suspension elements to body accelerations and/or angular acceleration of the rockers (e.g. any inerters, Mass Dampers, acceleration−sensitive valves in the dampers).

b. Any coupling of the suspension systems to the braking or steering systems. Furthermore, any variation of ride height caused by the suspension geometry's kinematics must not exceed

©2026 Fédération Internationale de l'Automobile

2mm over the range of ±12°, measured between the principal axis of rotation of the front wheel and an X−plane. Compliance must be demonstrated using CAD with the vehicle at Legality Setup, using a rigid set−up wheel of spherical outer surface and diameter 700 mm with its centre point at [X_W=0, Y_W=−168, Z_W=0].

For the avoidance of doubt, fixed suspension kinematic geometries which affect the reaction of contact patch forces such as "anti−dive", "anti−squat", "anti−lift" are permissible.

c. Any form of ride height control or alteration via self−levelling systems or feedback loops.

d. Any change of suspension characteristics resulting from track events acting as triggers with the exception of passive damping conforming to Article C10.4.3(b).

e. Any storing of energy via any means for delayed deployment and/or any suspension system that would result in a non−incidental asymmetry (e.g. hysteresis, time dependency, etc.) in the response to changes in load applied to the wheels.

f. Coupling between suspension elements, such that the state of an element(s) is used to alter the response of another element(s).

g. Any system such as spool valves, switches, ratchets, etc. intended to change the suspension elements' characteristics between different states. Valves within a suspension damper element are acceptable as long as the only function is to provide a passive change in the damper force response whilst conforming to Article C10.4.3(b).

h. Mass Dampers, as defined in Appendix C1.

C10.3 Outboard suspension

C10.3.1 With the steering wheel rotation fixed, the position of each wheel centre and the orientation of its rotation axis must be completely and uniquely defined by a function of its principally vertical suspension travel, save only for the effects of reasonable compliance which does not intentionally provide further degrees of freedom.

Additionally, the angle subtended between the normal projection of the Z_W axis onto the Y=0 plane and the Z axis must not vary by more than 1 degree over 10mm of suspension travel with the steering wheel rotation fixed. Compliance must be demonstrated by CAD, using camber values of −3 degrees front and −1 degree rear.

C10.3.2 There must be six suspension members connecting each suspension upright to the Sprung Mass.

Redundant suspension members are not permitted.

On the front axle, one suspension member per wheel must be connected to the steering system.

C10.3.3 Suspension members having shared attachment points will be considered by a virtual dissection into discrete members.

C10.3.4 The outboard attachment points of each suspension member (defined as the kinematic centre of rotation of the joint that allows relative rotation between a suspension member and its adjoining upright) must lie:

a. outboard of Y_W=0.

b. Above Z_W= −100 for the front axle and above Z_W= −40 for the rear axle.

c. Inside the Drum defined in Article C3.14.2.

Exceptionally, the outboard attachment point of a suspension member connected inboard, to the rockers defined in Article C10.4.1 and outboard, directly to another suspension member, may not satisfy the provisions of this Article, but must in any case:

d. lie outboard of Y_W=50.

e. be no more than 25mm from the load line of the suspension member it is attaching to.

f. together with the inboard attachment point of the same suspension member, lie on the same side of the suspension member it is attaching to when viewed from the front.

C10.3.5 On the front axle only, considering the six suspension members connected to an upright, but excluding the members connected inboard to the steering system or the rockers defined in Article C10.4.1, they must form 2 independent pairs of members each with their inboard attachment points separated in X by no less than 300mm and above Z=250mm. Furthermore to form a pair, each suspension member must also be accompanied by the suspension member with the closest outboard attachment point in Z_W.

C10.3.6 The structural part of each suspension member must:

a. In any normal cross section relative to its load line (defined as a straight line between the inner and outer attachment point centres of the member) have two orthogonal axes of symmetry. Over the whole length of the member, the cross section must have a constant size, shape, and incidence to the plane Z=0 when assessed at Legality Setup.

Furthermore, the centroid may not be more than 5mm from the load line with the exception of front suspension elements locally for the sole purpose of ensuring minimum clearance with the Wheel Rim at full steering lock.

In the case of the suspension member connecting the front upright to the steering system this dimension may be up to 10mm.

Minimal exceptions will be permitted for the following:

i. static ride height, camber, or toe adjustment components.

ii. the passage of hydraulic brake lines, electrical looms, or wheel tethers.

iii. the attachment of flexures, rod ends or bearings.

iv. along the interface between members that are structurally connected to each other.

v. Cut−outs to allow the passage of a suspension member connected at the inboard end to the rocker (Art C10.4.1).

vi. installation of strain gauge systems.

b. Not be in contact with the External Air Stream, unless it is of a circular cross section when measured normal to the load line.

c. Not vary the angle subtended by the major axis of the cross section in (a) and the plane Z=0 by more than ±5 degrees from that at Legality Setup over the range of suspension vertical

©2026 Fédération Internationale de l'Automobile

movement whilst Y_W remains parallel to the plane X=0 and by more than ±1degree from that at Legality Setup over the range of steering movement with the distance between the origin of the wheel coordinate system and Z=0 held constant. Compliance must be demonstrated by CAD, using camber values of −3 degrees front and −1 degree rear.

d. One of the six rear suspension members per side may be exempt from part a) above.

C10.3.7 It must be possible to achieve a minimum angle of +23°/−21° (positive angles mean toe in) between the principal axis of rotation of the front wheel and an X−plane. If necessary, the steering system may be disconnected from the suspension members or the steering arm may be changed to verify this requirement. The achievement of the minimum angles is intended at Legality Setup and the bodywork defined in Articles C3.14.3 through C3.14.9 may be removed.

C10.3.8 In order to help prevent a wheel becoming separated in the event of all suspension members connecting it to the car failing, flexible tethers as specified in Article C14.4.1must be fitted. The sole purpose of the tethers is to prevent a wheel becoming separated from the car, they should perform no other function.

C10.3.9 Where any Suspension Member attaches to the Survival Cell behind X_C=−1580, F1 Teams should provide calculations showing that there would be no damage to the Survival Cell if a load of 1.25 times the compressive failure load of the leg is applied to the mounting, along the axis of the leg.

C10.3.10 No rear suspension member may be attached to the Power Unit.

C10.4 Inboard suspension

C10.4.1 The inboard suspensions of the front and rear axles must only be actuated via a single rocker per wheel, with only a single outboard suspension connection to each rocker.

A rocker is a mechanical device that is rigidly supported on the Sprung Mass and rotates about a fixed axis on the Sprung Mass with no other relative degree of freedom.

C10.4.2 Suspension elements can only connect to the rockers or Sprung Mass, where any such connection is classified as a node, subject to the following restrictions :

a. They only permit relative rotation at their nodes.

b. They must be so arranged that any suspension element functions only in parallel to any other, even if multiple elements are physically combined into a single component and/or share physically coincident nodes.

c. There is only one degree of freedom between the end nodes of each element. No functional connection may be used to an y other part of the element in order to obtain, for example, a feedback signal for other parts of the suspension system.

d. With the exception of sensors whose sole purpose is to provide data, no other device(s) may connect to a node or act on the rocker.

C10.4.3 The only permitted suspension elements are:

a. Springs − the primary purpose of which is to absorb and release energy in a monotonically increasing load relationship with relative deflection between its nodes (or increasing torque with twist). Multiple springs may be combined in series or parallel to generate a single spring

©2026 Fédération Internationale de l'Automobile

element entity between its nodes providing the result, as measured at the nodes, conforms to the monotonic requirement above and no part of the design has the purpose and/or effect of altering this relationship. Spring elements using a fluid medium are not permitted.

b. Dampers – the primary purpose of which is to dissipate energy by generating an opposing force to the direction of motion as a function of the relative velocity between its nodes. ~~Utilisation of heavily asymmetric damping forces for the purpose and/or effect of contravening Article C10.2.6 is not permitted.~~ A gas spring as part of the functionality of a damper element, for the purposes of anti−cavitation, is acceptable as long as the spring rate, as measured between the nodes does not exceed 10N/mm.

The following conditions apply regarding the design and operation of all suspension elements:

a. Inputs to a suspension element other than the relative velocity and/or distance between its nodes are prohibited from influencing or modifying the element's force–velocity or force–displacement characteristics. Such inputs include, but are not limited to, excitation frequency, vehicle body accelerations, or relative nodal acceleration.

b. The damping force generated by a damper shall tend to zero as its relative nodal velocity tends to zero, excepting forces resulting from a permitted spring rate for anti-cavitation purposes, end stop mechanisms, or incidental effects such as hysteresis.

   Variations in damper response arising from unavoidable physical effects inherent to the design, such as valve inertia, fluid compressibility, or the finite response time of internal components, shall be considered incidental, provided they are not deliberately exploited to alter the primary damping characteristics under any operating condition.

c. The use of asymmetric damping forces to a degree that results in, or is intended to result in, contravention of Article C10.2.6 is not permitted.

   For a damper, at absolute relative nodal velocities above 8mm/s and below 200mm/s (providing that above this limit the damper is primarily responding to road surface undulations):

   i. at any given relative nodal displacement and absolute relative nodal velocity, the ratio of the absolute damping force in each direction must be no greater than ten.

   ii. that is connected to a single rocker or primarily responds to the average of the vertical motion of an axle, have a damping force as a function of relative nodal distance (at any given relative nodal velocity) that must increase strictly monotonically with reducing vehicle right height and increase by no more than a factor of two over the total range of relative nodal distance.

   For the avoidance of doubt, the limits defined in points (i) and (ii) apply to dampers whose primary response is to single wheel vertical motion or the average vertical motion of an axle, and do not apply to dampers whose primary response is to the difference in vertical motion between the wheels (commonly referred to as roll dampers).

d. Internal linkages, whether fluid or mechanical, may not extend outside the suspension element to a remote body. Convoluted fluid channels (e.g. helical) designed to add an inertial effect are not permitted.

©2026 Fédération Internationale de l'Automobile

Hysteresis is acceptable in an element ~~providing~~ provided it is at an incidental level and no attempt is made to utilise any inherent hysteresis to alter the response of the element relative to its primary purpose.

Links may be used to actuate the suspension elements that are mounted remotely from the rockers but cannot be used to circumvent or subvert the requirement of Article C10.2.6. Such links must be rigid, ~~and~~ of minimal mass and ~~design~~ designed so as to achieve the linking mechanism. Links using a fluid medium are not permitted.

Teams must supply sectional drawings, component descriptions, functionality explanations, and sample damper curves as described in FIA-F1-DOC-001 to demonstrate compliance with these requirements.

C10.5 Steering

C10.5.1 The steering system is the mechanical system, on and part of the Sprung Mass, that converts the steering column demand into the outboard suspension position control for the re−alignment of only the two front wheels (the steered wheels).

C10.5.2 The re−alignment of the steered wheels must be uniquely defined by a monotonic function of the rotation of a single steering wheel about a single axis. Furthermore, the inboard attachment points of the suspensions members connected to the steering system must remain a fixed distance from each other and can only translate in Y.

C10.5.3 Power assisted steering systems may not be Electronically Controlled or electrically powered. No such system may carry out any function other than reduce the physical effort required to steer the car.

C10.5.4 No part of the steering wheel or column, nor any part fitted to them, may be closer to the driver than a plane formed by the entire rear edge of the steering wheel rim. All parts fixed to the steering wheel must be fitted in such a way as to minimise the risk of injury in the event of a driver's head making contact with any part of the wheel assembly.

C10.5.5 The steering wheel, and steering column ~~and steering rack assembly~~ must pass an impact test, details of the test procedure may be found in Article C13.8.

C10.6 Suspension Uprights

C10.6.1 The upright is the structural component, in the outboard suspension, which provides the physical mounting, kinematic restraint and load path connections of the wheel axle to the suspension member outboard attachments as well as the reaction of the brake calliper loads into the suspension.

There can only be one suspension upright per Complete Wheel.

C10.6.2 The loads from the suspension members and wheel bearings must individually and entirely be carried by the suspension upright. Exceptionally up to three suspension members may be connected together by additional components, made from materials listed in C15.2.1 or 15.2.2, before their load is passed into the upright. Any such components are in any case considered to be part of the upright assembly.

©2026 Fédération Internationale de l'Automobile

C10.6.3 No part of the upright assembly may be inboard of Y_W=0 except for parts solely for the attachment and fixing of a suspension member outboard attachment point, conforming to Article C10.3.4 (a) to (c), to the upright which may encroach no more inboard than a sphere of radius 25mm about the attachment point.

C10.6.4 The uprights must be manufactured from materials as defined in C15.3.3.

C10.7 Wheel rims

C10.7.1 Wheel rim material

~~With the exception of surface treatments for appearance and protection, Wheel Rims must be made from AZ70 or AZ80 magnesium alloy~~ Refer to article C15.3.8.

Wheel rims must be manufactured from materials as defined in C15.3.8.

C10.7.2 Wheel rim dimensions

a. The Wheel Rim key dimensions are:

	Front Wheel	Rear Wheel
Rim Diameter	462.5 / 463	462.5 / 463
Tyre Mounting Width	315 ± 0.5	401.3 ± 0.5
Lip External Diameter	496 ± 0.5	496 ± 0.5
Overall Width	334 ref.	420.3 ref.
Outboard Lip Thickness	8.5 ± 0.2	8.5 ± 0.2
Inboard Lip Thickness	10.5 ± 0.2	10.5 ± 0.2

b. The Wheel Rim must be a solid of rotation formed by revolving a single profile around the axis of rotation of the Wheel Rim. The profile must be tangent continuous with a minimum radius of curvature of 8mm in the area:

i. more than 80mm from the axis Y_W.

and

ii. outboard of Y_W=−36.

and

iii. inboard of; Y_W=−302 for the front rim and Y_W=−388 for the rear rim.

c. Once the revolved solid has been fully defined, material may be :

i. removed between Y_W=−210 and Y_W=−392.5 on the rear wheel and between Y_W=−188 and Y_W=−319 on the front wheel. Any new surface created must have no concave radius of curvature smaller than 6mm.

ii. removed in areas less than 80mm from the axis Y_W.

iii. added or removed to form features for mounting the inflation valve and TPMS sensors.

iv. removed on the outer flanges, between a radius of 238mm and a radius of 246mm from the axis Y_W and up to 1mm deep for wheel branding, logo, or part numbers.

v. added or removed to form features for mounting the disc described in Article C10.7.5 or closing panel described in C10.7.2.e.

d. No part of the front or rear Wheel Rim may lie within RV−F−RIM−MIN or RV−R−RIM−MIN respectively.

e. There must be no passage for air between the inboard and outboard cavities of the Wheel Rim. Any closing panel may either be integrated into the rim or may be a separate piece. All separate closing panels must respect clauses (d), (j), and (k) of this Article. Closing panels which are not required to prevent airflow between the inner and outer cavities are not permitted.

f. The minimum Wheel Rim thickness is 2.5mm.

g. The minimum bead thickness is 4.0mm (measured from hump to outer edge of the lip).

h. The ETRTO standard bead profile is prescribed.

i. The design of the wheel must meet the general requirements of the tyre supplier for the mounting and dismounting of tyres including allowance for sensors and valves.

j. The Wheel Rim Assemblies mounted on the same axle must be identical. ~~design cannot be handed between left and right designs.~~

k. Features intended to influence the heat transfer characteristics of the Wheel Rim are not permitted. F1 Teams are required to submit designs to the FIA for approval. Further guidance is given in the document FIA-F1-DOC-131.

l. Design guidelines for the Wheel Rims are set out in FIA-F1-DOC-021. Any deviation from the guidelines must be agreed with the Tyre Supplier.

C10.7.3 Wheel Rim Impact Test

All Wheel Rims must pass the impact test defined in Article C13.10.

C10.7.4 TPMS Sensor

All cars must be fitted with tyre pressure and temperature monitoring sensors which have been manufactured by an FIA designated supplier to a specification determined by the FIA.

The TPMS sensor must be mounted in accordance with the specification given in the document FIA-F1-DOC-024.

Wheel rims and tyre pressure and temperature sensors should be marked according to the corner colouring and labelling scheme defined in the document FIA-F1-DOC-024.

C10.7.5 Outboard Disc

An annular disc must be fitted to all wheels.

No part of the disc or its fixings may lie within RV−F−RIM−MIN (front) or RV−R−RIM−MIN (rear).

With minimal exceptions for fasteners and access to the inflation valve, the disc must be axisymmetric about Y_W, with a uniform and continuous section around an arc of 360 degrees and

©2026 Fédération Internationale de l'Automobile

must fully enclose RS-F-RIM-DISC on the front wheel and RS-R-RIM-DISC on the rear to within 2mm radially of the wheel rim.

~~Unless extra precautions, approved by the tyre supplier, are taken when the wheels are presented for tyre fitting~~ No part of the disc may contain a convex radius of curvature less than 1.5mm within 160mm of the axis Y_W

The outboard disc may only be made from materials listed in Articles C15.2.3 (Polymer Composites) or C15.2.4 (Polymers).

C10.7.6 Parts attached to the wheel rim

The only parts which may be physically attached to the wheel in addition to the tyre are listed below.

Item	Article	May enter RV–RIM–F/R–MIN	Additional Restrictions	Included in Wheel Rim Assembly
Wheel Fastener	C10.9.1	Yes		No
Disc and fixings	C10.7.5	No		Yes
Drive Pegs	-	Yes		Yes
Wheel Spacers	-	No	Must be equal thickness left and right on same axle.	Yes
Inflation Valve	-	Yes		Yes
Closing Panels	C10.7.2.e	No		Yes
Balance weights	-	Yes	Only as fitted by Tyre Supplier	No
Standard TPMS Sensor (Mandatory) and mounting	C10.7.4	Yes		Yes
Standard Rim Temperature Sensor (Optional) and mounting	-	Yes		No

C10.8 Tyres

C10.8.1 Tyre supply

a. All tyres must be used as supplied by the manufacturer, any modification or treatment such as cutting, grooving, the application of solvents or softeners is prohibited. This applies to dry, intermediate and wet–weather tyres.

b. If, in the opinion of the appointed tyre supplier and FIA technical delegate, the nominated tyre specification proves to be technically unsuitable, the stewards may authorise the use of additional tyres to a different specification.

c. If, in the interests of maintaining current levels of circuit safety, the FIA deems it necessary to reduce tyre grip, it shall introduce such rules as the tyre supplier may advise or, in the absence

©2026 Fédération Internationale de l'Automobile

of advice which achieves the FIA's objectives, specify the maximum permissible contact areas for front and rear tyres.

C10.8.2 Tyre specification

Tyre specifications will be determined by the tyre supplier, in agreement with the FIA, data will be divided into data blocks as defined in the document FIA-F1-DOC-057 and according to the timetable given in that document.

Once determined in this way, the specification of the tyres will not be changed without the agreement of the Formula One Commission.

Notwithstanding the above, the FIA may decide to change the specification during the Championship season for safety reasons without notice or delay.

C10.8.3 Treatment of tyres

a. Tyres may only be inflated with air or nitrogen.

b. Any process the intent of which is to reduce the amount of moisture in the tyre and/or in its inflation gas is forbidden.

c. A Complete Wheel must contain a single fixed internal gas volume. No valves, bleeds or permeable membranes are permitted other than to inflate or deflate the tyre whilst the car is stationary.

d. The only permitted type of tyre heating devices are blankets that comply with the design prescriptions listed in Article C10.8.4. Any other device, system or procedure (except for driving of the car) whose purpose and/or effect is to heat the Complete Wheels, hubs, or brakes, or to maintain their temperature if they are already warm, is prohibited.

e. With the exception of incidental conduction or radiation, the only permitted tyre cooling is from convection of ambient air over the Complete Wheel or through the Wheel Bodywork defined in Article C3.15. Any other device, system or procedure the purpose and/or effect of which is to enhance tyre cooling beyond this is prohibited. Temporary fans blowing air at ambient temperature through the Wheel Bodywork when the car has returned to the pitlane or has arrived on the grid are excepted.

C10.8.4 Tyre heating systems design prescriptions

a. Tyre heating systems may only use resistive heating elements and act upon the outer tyre surface.

b. No more than three temperature controllable zones may be present on a single tyre blanket.

c. A temperature controllable zone is at most composed of one heating element (the actuator) and one or more temperature sensor(s) solidly mounted on the blanket.

d. The blanket temperature sensors may be used to control the delivered power of the actuator using a single−input single−output (SISO) feedback control strategy approved by the FIA. There should be no other sensors involved in the temperature control strategy.

©2026 Fédération Internationale de l'Automobile

If a temperature controllable zone contains more than one temperature sensor, the signals must be arbitrated by software prior to being used in the SISO feedback control loop. Additional software design guidelines may be found in the document FIA-F1-DOC-032.

e. At any time during a Competition, the heating system must provide mechanisms to:

   i. Log and download an accurate record of the last 96 hours of operations. Information to be logged is defined in the document FIA-F1-DOC-032 and will include power, and energy consumption.

   ii. Accurately display in real–time the calibration, inputs and outputs of all control and arbitration strategies,

   iii. Enable the FIA to test the operation of any tyre heating systems.

f. All software, hardware and wiring must:

   i. Be approved and homologated by the FIA prior to being used at a Competition,

   ii. Provide a unique and unambiguous identification that enables the FIA to identify and compare the versions being used to the version presented in the homologation dossier at any time during a Competition.

Additional details may be found in the document FIA-F1-DOC-032.

C10.9 Wheel attachment and retention

C10.9.1 The wheel must be attached to the car with a single fastener. The outer diameter of the fastener must not exceed 105mm and the axial length must not exceed 75mm. The wheel fastener may not attach or mount any part to the car except the wheel assembly described in Article C10.7.

C10.9.2 With the exception of manual torque wrenches, devices which are used to fit or remove wheel fasteners during the Sprint Qualifying Session, the Qualifying Session, Sprint Session or the Race may only be powered by compressed air or nitrogen or electricity.

Any sensor systems may only act passively.

C10.9.3 All cars, whilst under their own power, must be fitted with dual stage devices which will retain the wheel fastener in the event of it coming loose from both its full fitted position and from any angular position before the fastener begins to engage on the axle thread.

C10.9.4 Each F1 Team must provide test results which demonstrate that all dual stage devices must be able to :

a. Withstand 20kN of axial tensile force exerted on the wheel nut in a direction away from the car centre line whilst the wheel nut is fully disengaged from the thread.

b. Withstand 300Nm of torque exerted on the wheel nut in the unwinding direction whilst the wheel nut is partially engaged on the thread.

C10.9.5 Furthermore, the dual stage retaining systems must incorporate a means of allowing the wheel operator/fitter to visually identify an incorrectly fitted fastener.

©2026 Fédération Internationale de l'Automobile

C10.10 Dimensions

C10.10.1 Suspension Width

The origin of the front Wheel Coordinate System may not lie outboard of Y=603 when entering Parc Fermé.

The origin of the rear Wheel Coordinate System may not lie outboard of Y=525 when entering Parc Fermé.

2027

ARTICLE C11: BRAKE SYSTEM

Advisory Committee: TAC
Governance: F1 Commission / WMSC

C11.1 Brake circuits and pressure distribution

C11.1.1 With the exception of a Power Unit, all cars must be equipped with only one brake system. This system must consist of one pedal which operates two master cylinders. On the outlet side of the master cylinders the system must comprise of two hydraulic circuits, one circuit from one master cylinder to operate the two front wheels, the other circuit from the other master cylinder to operate the two rear wheels.

The rear braking system must be capable of providing at least 2500Nm of braking torque at each rear wheel without assistance from the Power Unit or MGU-K. This torque must be achieved with a maximum calliper pressure of 150barG. F1 Teams are required to submit a test report demonstrating this requirement.

The rear brake control system described in Article C11.6 will be regarded as part of circuit that operates the rear wheels. This system must be designed so that if a failure occurs in one circuit the pedal will still operate the brakes in the other.

The diameters of the master cylinders acting on the two rear wheels and the two front wheels must be within 3mm of each other and have the same available travel. The same principle must be applied in multi−stage master cylinder designs.

C11.1.2 The brake system must be designed so that within each circuit, the forces applied to the brake pads are the same magnitude and act as opposing pairs on a given brake disc. Any system or mechanism which can produce systematically or intentionally, asymmetric braking torques for a given axle is forbidden.

C11.1.3 Any powered device, other than the system referred to in Article C11.6, which is capable of altering the configuration or affecting the performance of any part of the brake system is forbidden.

C11.1.4 Any change to, or modulation of, the brake system, whilst the car is on the track must be made by the driver's direct physical input or by the system referred to in Article C11.6, and may not be pre−set.

C11.2 Brake callipers

C11.2.1 Brake callipers are defined as the parts of the braking system outside the Survival Cell, other than brake discs, brake pads, calliper pistons, components directly associated with the system referred to in Article C11.6, brake hoses and fittings, which are stressed when subjected to the braking pressure. Bolts or studs which are used for attachment are not considered to be part of the brake callipers.

C11.2.2 ~~All brake callipers must be made from aluminium materials permitted in Article C15.2.1.b.~~ Brake callipers must be manufactured from materials as defined in C15.3.7.

C11.2.3 No more than three attachments may be used to secure each brake calliper to the car.

C11.2.4 Each wheel must be equipped with one calliper. This calliper must have a minimum of one pair of opposing pistons and a maximum of four pairs of opposing pistons.

©2026 Fédération Internationale de l'Automobile

C11.2.5 The section of each calliper piston must be circular.

C11.3 Brake discs and pads

C11.3.1 Each wheel must be equipped with one brake disc which must have the same rotational velocity as the wheel it is connected to.

C11.3.2 All discs must have a maximum thickness of 34mm.

C11.3.3 The diameters of the discs are between 325mm and 345mm for the front and between 260mm and 280mm for the rear.

C11.3.4 The minimum diameter of cooling holes in the discs is 2.5mm.

C11.3.5 Each wheel must be equipped with one or two opposing pairs of brake pads.

C11.4 Brake pressure modulation

C11.4.1 No braking system may be designed to prevent wheels from locking when the driver applies pressure to the brake pedal.

C11.4.2 No braking system may be designed to increase the pressure in the brake callipers above that achieved by the driver applied force to the pedal under all conditions except for the system referred to in C11.6.

C11.5 Liquid cooling

Liquid cooling of the brakes is forbidden.

C11.6 Rear brake control system

The pressure in the rear braking circuit may be provided by a powered control system provided that:

a. The driver brake pedal is connected to a hydraulic master cylinder that generates a pressure source that can be applied to the rear braking circuit if the powered system is disabled.

b. It does not exceed 1.2 times the pressure concurrently generated by the driver at the rear master cylinder.

c. The powered system is controlled by the Control Electronics described in Article C8.2.

C11.7 Supply of Brake Friction and Brake System Hydraulic components

The Brake Disks and Pads described in Article C11.3, the Brake Calliper described in Article C11.2, the Master Cylinder described in Article C11.1 and Rear brake control system described in Article C11.6 are classified as OSC, in accordance with the provisions of Article C17.5.

ARTICLE C12: SURVIVAL CELL

Advisory Committee: TAC
Governance: F1 Commission / WMSC

C12.1 General Requirements

C12.1.2 Homologation

The Survival Cell must be homologated in accordance with the provisions of Article C13.

C12.1.3 Demonstration by Calculation

Where the regulations require an F1 Team to demonstrate the strength of a component or structure by calculation, a reserve factor of 1.0 at ultimate failure should be used for metallic components and first−ply failure for composites.

The FIA may request F1 Teams to submit models and material properties used in these calculations for inspection.

C12.2 Survival cell specifications

C12.2.1 Cockpit Opening

In order to ensure that the opening giving the driver access to the Cockpit is of adequate size; with the exception of the steering wheel, steering column, seat and all padding required by Article C12.6.1 (including the forward most fixings), or the Windscreen defined in Article C3.13.1 and its fixings, no part of the Survival Cell or bodywork may lie within RV−COCKPIT−ENTRY.

With the secondary roll structure removed, RV−COCKPIT−ENTRY must be entirely visible from directly above.

The shape of the Survival Cell must be such that no part of this volume is visible when viewed from either side of the car.

The parts of the Survival Cell which are situated each side of the driver's head must be no more than 550mm apart.

C12.2.2 Survival Cell Dimensions

Before the openings and recesses allowed in Articles C12.2.1, C12.2.4 and C12.2.5 are created, a single volume, which is continuous, and has no apertures must be defined in accordance with the conditions laid out in (a)−(d), below. All parts of the Survival Cell in contact with the External Air Stream must comply with C3.2.3.

a. No part of the Survival Cell may lie ahead of X_A=0.

b. No part of the Survival Cell may lie behind X_{PU}=0.

c. The minimum dimensions of the Survival Cell between X_A=0 and X_C=0 are defined by the union of RV−CH−FRONT−MIN and RV−CH−MID−MIN.

d. The Survival Cell must fully enclose RS-PU-ERS.

e. The maximum dimensions of the Survival Cell between X_A=0 and X_C=−875 are defined by the union of RV−CH−FRONT and the portion of RV−FLOOR−BODY that lies forward of X_C=−875 and inboard of Y=±210.

©2026 Fédération Internationale de l'Automobile

f. Material may be removed from the upper front part of the volume defined in (c) above. In order to do so, a Z−plane must be defined such that the remaining part of RV−CH−FRONT−MIN below it is at least 250mm high in every X−plane ahead of X_C=−1600. Material may only be removed above this Z−plane and ahead of X_C=−1600, in two stages:

   i. After the first stage of material removal, the external surface of the Survival Cell forward of X_C=−1590, must enclose all mechanical components and associated brackets of the inboard front suspension at Legality Setup. Furthermore, any normal to this external surface must not subtend an angle greater than 25° to an X−plane, with the exception of the areas covered by the structural part of the front impact structure.

   ii. In the second stage, further material may be removed down to the Z−plane defined above. In every X−plane, a cumulative total width of 100mm must remain from the surfaces created in the first stage of material removal.

g. Whether material is removed in either (f.i) or (f.ii), or not, a 100mm wide structural section must be defined. This structure:

   i. must be symmetrical about Y=0.

   ii. may be either a single section or two 50mm wide sections and may transition between the two.

   iii. must provide a continuous transition between the FIS and X_C=−1600. The normal to any surfaces which are visible in the positive X-direction with the structural FIS in place must subtend an angle less than 25° to an X−plane.

   iv. may be removable, wholly or in part, provided that the fastenings can resist a load of [50, 0, −30] kN, to be demonstrated by calculation.

   v. must, in any X-Section, be higher than all mechanical components and associated brackets of the inboard front suspension at Legality Setup.

h. The minimum convex polygon enclosing the structural parts of the *Survival Cell* at X_A=0 and the minimum convex polygon enclosing the structural parts of the front impact structure at X_A=0 must be within 7mm of each other around their entire periphery.

C12.2.3 Identification Transponders

Every Survival Cell must incorporate three FIA supplied transponders for identification purposes. These transponders must be a permanent part of the Survival Cell, be positioned in accordance with Drawing 2 and must be accessible for verification at any time.

C12.2.4 Openings in the Survival Cell

The Survival Cell must have an opening for the driver, the dimensions of which are given in Article C12.2.1. Any other ducts, or openings in the Survival Cell must only:

a. Be of the minimum size, and for the sole purpose of, allowing access to mechanical components.

b. Be for the sole purpose of cooling the driver or mechanical or electrical components, the area of any such duct or opening may not exceed 3000mm^2.

©2026 Fédération Internationale de l'Automobile

c. Be for the sole purpose of routing wiring looms, cables or fluid lines, the total combined area of any such openings must not exceed 7000mm^2.

d. In the rear bulkhead for access to the ERS. The Fuel Bladder must not be exposed by this opening.

e. Be for team specified sensors. The total combined area of any such openings must not exceed 1500mm^2.

No openings may be made in the 100mm wide section(s) defined in Article C12.2.2.g.

C12.2.5 Recesses in the Survival Cell Minimum Volume

Recesses are permitted in the Survival Cell minimum volume, defined in Article C12.2.2, for the following:

a. For the sole purpose of, allowing the side impact structures and their mountings to be installed in accordance with Article C13.5.1. The area of each such recess for each side impact structure must not exceed 8 000mm^2 when projected onto a Y−plane.

b. For the sole purpose of allowing the Secondary Roll Structure front fixing and fairings to be installed in accordance with Articles C12.4.2 and C3.12.3 (b). The total area of any such recess must not exceed 50 000mm^2.

c. Minimal Recesses for the sole purpose of mounting mandatory components. Including but not limited to; timing transponder, F1MS Antenna, position 5 camera, medical light, datum−target seats, ERS Status Light, and CDS button.

d. Minimal Recesses for the sole purpose of mounting team specified components. Including but not limited to; suspension brackets, Suspension Fairings, slip−angle sensor, bib stay mounting, and antennae.

e. Recesses of maximum area 75 000mm^2 per side and of maximum depth 1.5mm, within the volume RV-CH-FRONT-MIN, for the sole purpose of mounting team specified Bodywork components.

f. Recesses of maximum area 75 000mm2 per side and of maximum depth 1.5mm, within the volume RV-CH-MID-MIN, for the sole purpose of mounting team specified Bodywork components.

Furthermore:

g. The step surfaces of recesses no more than 3mm deep are not required to comply with the angle constraints of C12.2.2.f.i.

h. Any recesses in areas covered by Article C12.3.1 − Anti Intrusion Laminate, must comply with that article's requirements for maintaining equivalent intrusion strength.

C12.2.6 Structure behind the driver

The parts of the Survival Cell immediately behind the driver which separate the Cockpit from the car's fuel tank, must lie outside RV−COCKPIT−DRIVER.

No head and neck support worn by the driver may be less than 25mm from any structural part of the car when the driver is seated in the normal driving position.

©2026 Fédération Internationale de l'Automobile

No part of any component that is required to be installed within RV−PU−ERS;

a. that lies above Z=50, may lie ahead of RS−FWD−FUEL−LIMIT.

b. that lies on or below Z=50, may lie more than 50mm ahead of RS−FWD−FUEL−LIMIT.

C12.2.7 Chassis Datum Points

For aligning the car for scrutineering, the Survival Cell should have the necessary precisely machined details to allow for the relevant legality datum points defined in Article C3.3.3 to accurately positioned.

C12.2.8 Location of RV-PU-ERS

No part of RV-PU-ERS that lies above Z=51 may lie forwards of RS-FWD-FUEL-LIMIT.

C12.3 Intrusion Protection

C12.3.1 Survival Cell Intrusion Specification

In order to protect the driver and the fuel bladder in case of an impact, the sides and lower surfaces of the Survival Cell must comply with the following requirements:

a. With the exception of recesses permitted by Articles C12.2.5.c, or C12.2.5.d, surfaces which lie on or outside RV−CH−FRONT−MIN, or that are created by the recesses defined in Article C12.2.5.e, and lie:

   i. Longitudinally, behind X_C=−1630 and ahead of RS−INTSN-LAM−FWD.

   ii. Vertically, above Z=100 and below the lower of; Z=550 and a curve 50mm below the top curve of RV−CH−FRONT−MIN.

   Must be constructed with a single homologated laminate HL−FWD−SC.

   Any panel covering the Timing Transponder required by Article C8.15 is excluded from this requirement.

b. With the exception of recesses permitted by Article C12.2.5.a, surfaces which lie:

   i. Longitudinally, behind RS−INTSN-LAM−FWD and ahead of the intersection of RS−FWD−FUEL−LIMIT with the surface.

   ii. Vertically, between Z=100 and Z=550.

   Must be constructed with a single homologated laminate HL−COCKPIT−SIDE.

c. With the exception of recesses permitted by Article C12.2.5.a, surfaces which lie:

   i. Longitudinally, ahead of X_C=−415.

   ii. Vertically, below Z=100.

   Must be constructed with a single homologated laminate HL−COCKPIT FLOOR.

d. With the exception of recesses permitted by Article C12.2.5.a, surfaces that lie:

   i. Longitudinally, behind the intersection of RS−FWD−FUEL−LIMIT with the surface and ahead of RS−INTSN−LAM−RWD.

©2026 Fédération Internationale de l'Automobile

ii. Vertically, between Z=100 and Z=550.

Must be constructed with a single homologated laminate HL−FC−SIDE.

The following changes are permitted to the Homologated Laminates. The FIA Technical Delegate must be satisfied that the intrusion resistance of the structure has not been reduced by any modification and that its ability to pass the tests defined in Article C15.5.3 is maintained. Further guidance on what is and what is not permitted is given in the document FIA-F1-DOC-117.

e. Where the Homologated Laminate is monolithic:

i. Plies may be added to the laminate.

ii. Solid Inserts may be incorporated into the laminate.

iii. Core, reinforcing structures, and an additional skin may be added to the inside face of the laminate.

iv. Core or hollow reinforcing structures must not be added within the laminate.

f. Where the Homologated Laminate is a sandwich construction:

i. Plies may be added to the laminate of the inner or outer skin.

ii. Solid Inserts may be incorporated within the laminate of the inner or outer skin.

iii. Core density and thickness may be increased.

iv. Reinforcing structures and inserts may be added within or may replace the core locally. No replacement insert or structure may reduce the mass of the panel to which it is added.

v. Core or hollow reinforcing structures must not be added within the inner or outer skin.

C12.3.2 Frontal Intrusion

It must be demonstrated by calculation that during a collision, the rear impact structure of a car ahead could not enter the Survival Cell through the front bulkhead if the Front Impact Structure were not present. For this calculation, a load of [215, 0, 0]kN should be applied through a pad of the same dimensions as the prescribed rear impact structure, anywhere on the front bulkhead of the Survival Cell. The pad should not intrude into the Survival Cell more than 50mm behind X_A=0. All components normally attached to the Survival Cell, except for the Front Impact Structure, must be considered in this evaluation.

C12.3.3 Cockpit Side Structure

The Survival Cell visible from the side that covers RV−CH−MID−MIN must be designed to resist the force of an impacting Front Impact Structure, at up to 380kN. This should be demonstrated by the tests and calculations defined in Article C13.4.6.

C12.4 Roll Structures

All cars must have two roll structures that are designed to help prevent injury to the driver in the event of the car becoming inverted.

C12.4.1 Principal Roll Structure

The principal roll structure must satisfy the following geometric requirements:

a. It must have structure at [X_C=55, 0, 968].

b. A horizontal section through the structure at Z=950 must enclose an area of at least 6000mm^2. The cross−sectional area may not be less than 6000mm^2 in any horizontal section below this plane.

c. Above Z=935, the external surface of the structure must be tangent continuous, and must not contain any concave radius of curvature. Any convex radius of curvature must be no smaller than 20mm.

   Compliance will be assessed without considering an opening in the structure to allow aerodynamic ducts to pass through. Any such opening must be below Z=955.

   Minimal local deviations from this surface are permitted at the intersection of the external surface and openings for an internal duct, and for the mounting of Camera 4.

d. A horizontal section through the structure at Z=910 must enclose an area of at least 10000mm^2. Furthermore, the section must enclose an axis−aligned square of side 70mm. These requirements must be maintained in any horizontal section below this plane.

When evaluating the above, only parts that genuinely contribute to the strength of the principal roll structure will be considered and no fairings may be included. Parts of the structure above Z=935 must be designed to support the car in a 20g vertical impact with the ground and be made from an abrasion resistant material.

The areas required in (b) and (d) above, will be taken as the area of the minimum convex polygon enclosing the structural parts of the roll hoop in that plane.

In order that a car may be lifted quickly in the event of it stopping on the circuit, the principal rollover structure must incorporate an unobstructed opening, whose section measures 60mm x 30mm with internal radii of no more than R15mm, clearly visible in side view, to permit a strap to pass through it.

It must be shown by calculation that this opening is capable of resisting a load of 20kN applied by a strap in an upwards direction, on the ZX plane between +45° and −45° to the Z−axis. In designs where the strap could be threaded in different ways, calculations must be provided for all possibilities.

C12.4.2 Secondary Roll Structure (Halo)

The Secondary Roll Structure, which is not considered part of the Survival Cell, must be positioned symmetrically about the car centre plane with its front fixing axis at X_C= −975 and Z=660. The mounting faces for the rearward fixings must lie on the plane Z=695.

The Secondary Roll Structure must be made to standard FIA8869−2018 and supplied by an FIA designated manufacturer. Details of the structure and its mountings may be found in the document FIA-F1-DOC-115.

The FIA will take the appropriate measures to ensure that Secondary Roll Structures supplied by different FIA designated manufacturers are of similar mass.

©2026 Fédération Internationale de l'Automobile

C12.5 Cockpit Specification

C12.5.1 Entry and Exit

The driver must be able to enter and get out of the Cockpit without it being necessary to open a door or remove any part of the car other than the steering wheel or the headrest as defined in Article C12.6.1.

From the normal seating position, with the safety harness fastened and whilst wearing the usual driving equipment, the driver must be able to remove the steering wheel and get out of the car within 7 seconds and then replace the steering wheel in a total of 12 seconds.

For this test, the position of the steered wheels will be determined by the FIA technical delegate and after the steering wheel has been replaced steering control must be maintained.

C12.5.2 Helmet Position

When seated normally, the driver must be facing forwards and the rearmost part of the crash helmet must be between $X_C = -50$ and $X_C = -125$.

The driver's helmet must lie below a line drawn between the front fixing axis of the Secondary Roll Structure and a point 75mm vertically below the highest point of the principal roll structure.

C12.5.3 Steering Wheel

The steering wheel, at any rotation, must lie below a line drawn between the front fixing axis of the Secondary Roll Structure and a point 75mm vertically below the highest point of the principal roll structure.

The steering wheel must be at least 50mm behind the front edge of the Cockpit opening.

The steering wheel must be fitted with a quick release mechanism operated by pulling a concentric flange installed on the steering column behind the wheel.

The steering wheel must be positioned so as it intersects RV−COCKPIT−HELMET at all angular positions.

C12.5.4 Internal cockpit volumes

a. With the exception of the steering wheel, pedal assembly, driver's seat, and any padding that is required by Article C12.6.2, no part of the car may lie within a volume created by sweeping the outer vertical section shown in Drawing 3 of Appendix C3 between $X_C = -850$ and $X_C = -1415$.

b. With the exception of the steering wheel, steering column, driver's seat, additional padding complying with Article C12.6.2.e, and pedal assembly, no part of the car may lie within a volume created by sweeping the inner vertical section shown in Drawing 3 of Appendix C3 between $X_C = -850$ and $X_C = -1515$.

c. No part of the car may lie within the volume defined in RV−COCKPIT−DRIVER with the exception of:

   i. Items required for driver comfort or restraint e.g., the seat and its mountings, safety harness and its mountings, drinks system, padding required by Article C12.6.1.

©2026 Fédération Internationale de l'Automobile

ii. Items required for the driver to control the car e.g. steering wheel, steering column, dash display, switch panels, associated looms, driver microphone & earpiece.

iii. Items that need to be accessed whilst the driver is seated in the car e.g. SDR download connector, connector for driver radio, associated looms, ES dousing connector.

iv. Driver ballast.

v. wiring looms or cables, excluding connectors, electrical boxes, or other electrical components.

vi. Fire extinguisher nozzles, tubes, and brackets.

vii. Fluid lines and their fittings.

viii. The accelerometer close to the centre of gravity, required by Article C8.9.2.

d. The driver, seated normally with the safety harness fastened and with the steering wheel removed must be able to raise both legs together so that the knees are past the plane of the steering wheel in the rearward direction. This action must not be prevented by any part of the car.

C12.5.5 Position of the Pedals

The face of the foremost pedal, when in the inoperative position, must be no further forward than X_A=315.

It must be possible to mount the pedals with the face of the brake pedal as far forward as X_C= −1515. When mounted in the forward most position, the brake pedal, through the full pedal sweep, must maintain at least 10mm longitudinal clearance from any structure or component that could limit further movement.

C12.6 Cockpit Padding

C12.6.1 Headrest

All cars must be equipped with three areas of padding for the driver's head which:

a. Are so arranged that they can be removed from the car as a single part.

b. Are made from a material which is suitable for the relevant ambient air temperature, details of approved materials and the temperature bands in which they should be used may be found in the document FIA-F1-DOC-049.

c. Are covered, in all areas where the driver's head is likely to make contact, with laminate PL−HEADREST.

d. Are positioned to be the first point of contact for the driver's helmet in the event of an impact projecting the driver's head towards them during an accident.

e. Must have a cover and internal structure which have no features that obstruct the padding's freedom to compress to 5% of its uncompressed thickness.

f. Must be so installed that if movement of the driver's head, in any expected trajectory during an accident, were to compress the padding fully at any point, the driver's helmet would not make contact with any structural part of the car.

g. Do not obscure sight of any part of the driver's helmet when he is seated normally and viewed from directly above the car.

Rear Padding

The first area of padding must be positioned behind the driver's head, be between 260mm and 380mm wide and be between 75mm and 90mm thick over an area of at least 40000mm^2. If necessary, and only for driver comfort, an additional piece of padding no greater than 10mm thick may be attached to this headrest provided it is made from the same material.

Side Padding

Two areas of padding must be positioned either side of the driver's head. These areas must:

h. Be symmetrically positioned about Y=0.

i. Be positioned with their upper surfaces at least as high as the Survival Cell over their entire length.

j. Have a radius on their upper inboard edge no greater than 10mm.

k. Be positioned in order that, forward of X_C=−150, the distance between the two is no less than 320mm.

l. Be as high as practicable within the constraints of driver comfort.

m. Extend as far forward as the forward face of RV−COCKPIT−HELMET.

Between X_C= −75 and X_C= −400 and above Z=545, the padding must be at least 95mm thick over an area greater than 35750mm^2 when viewed from the side of the car. This minimum thickness must be maintained to the upper edges of the Survival Cell and over their entire length. The minimum thickness will be assessed perpendicular to the plane Y=0 and prior to the application of the radius required by (j).

Furthermore, any void between these areas of padding and the rear part described above must also be completely filled with the same padding material.

If necessary, and only for driver comfort, an additional piece of padding no greater than 20mm thick may be attached to these headrests provided they are made from the same material which incorporates a low friction surface.

Fixings

The Headrest should be fixed in a way that is clearly indicated and should be easily removable without tools. Fixings should consist of:

n. Two cylindrical longitudinal pegs with a diameter of at least 6mmand with an engagement of at least 12mm into the rear of the cockpit opening

o. A keyhole fixing at X_C= −250 ±50mm and Z=610 ±25mm on each side of the car. These fixings must comply with C12.6.1 (e) and the receptacle mounted on the Survival Cell must be flush with the Survival Cell structure. These fixings must prevent the headrest from moving laterally or vertically with up to 12mm of forward movement of the headrest. They may not be inside RV−COCKPIT−HELMET and should be designed to minimize the risk of injury should the driver come in contact with them during an accident.

©2026 Fédération Internationale de l'Automobile

p. A quick release fixing which is clearly indicated at the front corner on each side of the car. No tape or similar material may be used to cover the forward fixings of the headrest.

C12.6.2 Leg Padding

In order to minimise the risk of leg injury during an accident, additional areas of padding must be fitted each side of, and above, the driver's legs.

These areas of padding must:

a. Be made from a material described in the document FIA-F1-DOC-049.

b. Be no less than 25mm thick over their entire area.

c. Cover the area situated between the plane X_C=−875 and 100mm behind the face of the rearmost pedal when in the inoperative position.

d. Cover the area 50mm above the lower surface of the volume defined in Article C12.5.4.a, over its entire length, as defined in (c) above.

e. An additional piece of padding may be placed between the driver's knees provided that:

   i. It is securely attached to the satisfaction of the Technical Delegate.

   ii. It can be detached without tools.

   iii. It is present when compliance with Articles C12.5.1 and C12.5.4.d is assessed.

C12.7 Front Floor Structure

Below the Survival Cell, a structure, called Front Floor Structure must be fitted.

The Front Floor Structure:

a. Must be securely mounted to the Survival Cell.

b. Must only deform in the event of an impact with the ground.

A single device may be fitted between the Front Floor Structure and the Survival Cell. This device:

c. Must not incorporate any component, mechanism or structure whose characteristics vary with time, velocity, acceleration or temperature. Including, but not limited to viscous damping, hysteretic damping and hydraulic systems.

d. must be mounted outside the survival cell.

The system as a whole:

e. Must not incorporate any parts which may systematically or routinely exhibit permanent deformation.

f. Must not be designed in such a way, or incorporate any component, mechanism or structure that can cause it to exhibit anything other than the same load deflection relationship measured during the test described in Article C3.18.5 whilst on the circuit (other than minor incidental effects such as those caused by inertia).

g. Must be enclosed by the union of the Floor Bodywork and the fairing defined in Article C3.5.14. d (if fitted), such that no part of the system is in contact with the External Air Stream.

©2026 Fédération Internationale de l'Automobile

If the single device permitted above already conforms to the requirements of Article C3.5.14.d i and ii without the need of a fairing, over its parts in contact with the External Air Stream, then it will be considered that the device is its own fitted fairing.

C12.8 Seat fixing and removal

All cars must be fitted with a removable seat which, if it is secured, must be done so with no more than two fastenings. If fastenings are used, they must be:

a. Clearly indicated and easily accessible when the driver is seated and with the headrest removed.

b. Fitted vertically.

c. Removable either without tools, or with a 4mm hexagonal key.

The seat must be equipped with receptacles which permit the fitting of belts to secure the driver and one which will permit the fitting of a head stabilisation device. Further details are given in FIA-F1-DOC-097.

The seat must be removable without the need to cut or remove any part of the safety harness.

C12.9 Driver Fit Information

Driver–fit information may be transferred between teams. Such information may include CAD geometries and measurements directly relating to driver–fit but must not include construction details.

Information that can be transferred includes: seat geometry, helmet position, steering wheel position, safety harness installation, elbow and knee clearance, pedal position, pedal–pad geometry, and heel–rest geometry.

In all cases, the content of the information to be transferred must be approved by the FIA before it is exchanged.

2027

ARTICLE C13: SAFETY STRUCTURES AND HOMOLOGATION

Advisory Committee: TAC
Governance: F1 Commission / WMSC

Note: The format of article C13 has been changed. For clarity, only substantive changes have been highlighted

C13.1 General Principles

C13.1.1 The purpose of this Article is to define the safety structures of the car and all the homologation processes necessary to guarantee that each car that is eligible to race satisfies all the relevant requirements.

C13.1.2 Should a fundamental weakness or sub−optimal level of safety become evident in either the definition of the structures or the homologation procedures, the FIA retains the right to modify the relevant regulations without observing the deadlines otherwise dictated by the prevailing governance regulations. In any case, such actions will be discussed in the Technical Advisory Committee.

C13.1.3 All impact tests must be carried out in accordance with FIA Test Procedure 01/00, in the presence of an FIA technical delegate and by using measuring equipment which has been calibrated to the satisfaction of the FIA technical delegate. The test procedure is detailed in the document FIA-F1-DOC-002.

C13.1.4 For all impact tests, all parts that could materially affect the outcome of the test must be fitted. Parts that would not significantly affect the outcome of the test must not be fitted. A list is given for each test in FIA-F1-DOC-002-03.

F1 Teams must provide a document showing which parts are present. This document must be submitted at least one week before the scheduled test date.

C13.1.5 Any significant modification introduced into any of the structures tested shall require that part to pass a further test.

C13.1.6 With the exception of tests described by Article C13.3.2, all static and dynamic load tests must be performed with the Secondary Roll Structure (whether dummy or otherwise) removed.

C13.1.7 One Survival Cell must pass all the tests described in C13.2, C13.3, C13.4, and C13.5 and will be referred to as the reference survival cell. Every Subsequent Survival Cell must pass tests C13.4.1 to C13.4.6

©2026 Fédération Internationale de l'Automobile

C13.1.8 Conditions applicable to all static load tests in C13:

Field	Description
Structure	As defined per individual test
Test Type(s)	Physical test and/or calculation
Loaded Area(s) / Feature(s)	As defined per individual test
Load(s)	As defined per individual test, with measuring equipment which has been calibrated to the satisfaction of the FIA technical delegate.
Load Direction(s)	As defined per individual test
Load Application Point(s)	As defined per individual test
Load Application Method	Ball-jointed load application unless otherwise stated
Pad / Adaptor Details	Pad edges radius ≤ 3 mm Optional total 3 mm rubber or foam layer permitted. All pads must conform to the shape of the tested component
Support / Boundary Conditions	~~Permitted survival cell supports~~ Survival cell support options, see individual tests for applicability: i) Cradle beneath conforming to the Survival Cell shape (no contact above Z = 100), ii) Lateral cradle which may extend from X_A=0 to X_{PU}=0 (no contact above Z = 645), iii) PU mounts iv) FIS mounts v) Front and rear secondary roll structure mounts. In addition, or alternative to, the support given by the forward mount, a pad on the top surface of the survival cell extending from X_C=−1300 to X_C=-850 and above Z=540. F1 Teams can use smaller supports than permitted. ~~These supports must not increase the stiffness or strength of the loaded Area.~~ The Survival Cell may be mounted in any orientation provided that the mounting arrangement does not increase its strength or stiffness
Hold Time	Peak load applied in < 3 min and held for 5s unless otherwise stated and kept above the target load for the total duration of the hold time
Displacement Reference	Measured at pad centre of area, unless stated otherwise
Displacement Direction	Along axis of load application
Acceptance Criteria	~~Surface deflection ≤ 120% of reference Survival Cell~~ ~~If reference < 3 mm, limit = min(permitted deflection, 3.6 mm)~~ Surface deflection ≤ greater of (120% of reference survival cell, 3.6mm), capped at the article's stated limit No structural failure unless otherwise stated
Notes	All Survival Cells must be produced in identical condition for mass comparison. If mass differs by > 5% from the reference Survival Cell, further frontal, side impact, and roll structure tests are required Any significant modification to a tested structure requires re-test

©2026 Fédération Internationale de l'Automobile

C13.2 Survival Cell Frontal Impact Test

Field	Description
Structure	Reference Survival Cell
Test Type(s)	Physical Dynamic Test
Assembly info	a) Survival cell front bulkhead plate: ○ 50 ± 1 mm thick aluminium ○ 430 ± 1 mm wide × 430 ± 1 mm high ○ Fitted symmetrically about Y = 0 and vertically, attached through the FIS mounting points ○ A 5 mm × 430 × 430 mm steel plate is fitted by the test laboratory through a grid of seven M10 × 30 mm holes (per regulation diagram below), with a 5 mm washer stack b) Fuel tank: fitted and fully filled with water c) Dummy: ≥ 75 kg, with safety harness fastened, as in–race conditions, per C14.5, helmet (FIA8860 or FIA8859) and FHR (FIA8858). Helmet + FHR mass recorded but excluded from the 75 kg With the safety harness unfastened, the dummy must be able to move forwards freely in the Cockpit d) Fire extinguishers fitted per C14.1 e) 12 kg of Driver Ballast
Impactor	Static barrier with 7 carbon crush tubes (FIA-F1-DOC-002), combined nominal load 500 kN, see details below this table
Test Article Mass (m)	900 ≤ m ≤ 925 kg (trolley + Survival Cell + all fitted parts)
Impactor Velocity	≥ 15 m/s
Impactor End-Stops	N/A
Impactor Direction	[+1, 0, 0], front bulkhead leading
Boundary Conditions	Survival Cell solidly fixed to trolley through the engine mounting points, in a way that does not increase its impact resistance Trolley free to translate along impact direction
Deceleration profile	Peak Survival Cell acceleration ≥ 52 g, measured from T = 30 ms
Other Acceptance Criteria	a) No damage to Survival Cell, safety belt mountings, or fire extinguisher mountings b) Maximum Survival Cell displacement from T-zero ≤ 425 mm
Notes	a) Test only carried out on a Survival Cell that has passed C13.3, C13.4, and C13.5. At FIA discretion, the dynamic test may be permitted with some of those tests unsuccessful, provided C13.4.8 has been passed b) Maximum dummy chest deceleration (cumulative 3 ms, resultant of three orthogonal axes) is recorded but has no pass/fail threshold

©2026 Fédération Internationale de l'Automobile

Crush tubes details (engagement vs trolley travel, T-zero = first contact):

a. 2 x tubes, 900mm long, from T−zero to T−end, directed into the lower left and right M10 attachment points.

b. 1 x tube, 800mm long, from T−100mm to T−end, directed into the central M10 attachment point.

c. 2 x tubes, 750mm long, from T−150mm to T−end, directed into the central upper and lower M10 attachment points.

d. 2 x tubes, 650mm long, from T−250mm to T−end, directed into the upper left and right M10 attachment points.

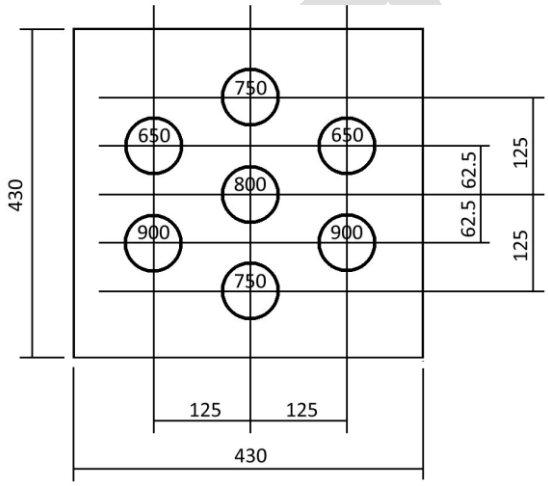

The specification of the tubes and details of how they should be mounted is given in the document FIA-F1-DOC-002.

C13.3 Roll Structure Testing

C13.3.1 Principal Roll Structure Tests:

Physical

Field	Description
Structure	Reference Survival Cell
Test Type(s)	Physical test: a) b) c) Calculation: all
Loaded Area(s) / Feature(s)	Principal Roll Structure
Load(s)	Physical test: The same structure must be subjected to two distinct tests, first at a total force magnitude of 129 kN, the second at 172 kN Calculation: 172kN
Load Direction(s)	a) [1, 1, -1] b) [-1, 1, -1] c) [0, 0, -1] d) [1.44, 0, -1] e) [-1.44, 0, -1] f) [0, 1.44, -1]
Load Application Point(s)	Top of Principal Roll Structure, above Z = 935 initially, then above Z = 900 at any point during the test
Load Application Method	Point load applied through rigid pad, perpendicular to the loading axis
Pad / Adaptor Details	200 mm diameter rigid pad, perpendicular to loading axis. Recess up to 3 mm deep conforming to Roll Structure geometry; recess edge may be blended with a radius up to 5 mm
Supports	i) Yes ii) Yes iii) Yes iv) Yes v) No
Hold Time	5s
Displacement Reference	Ground
Displacement Direction	Along loading axis
Acceptance Criteria	Total deflection ≤ 25 mm No structural failure below ~~Z =~~ 100mm from the top of the roll structure
Notes	The two physical loadcases are selected at random from a), b), c) and communicated to the F1 Team 3 weeks before the scheduled homologation date

By Calculation

Field	Description
Structure	Reference Survival Cell
Test Type(s)	Calculation only (no physical test)
Loaded Area(s) / Feature(s)	Top Area of the Principal Roll Structure
Load(s)	50kN
Load Direction(s)s	g) Normal to the external surface

©2026 Fédération Internationale de l'Automobile

Load Application Point(s)	Anywhere above Z = 935
Load Application Method	Point load applied through rigid pad
Pad / Adaptor Details	10 mm diameter. No rubber allowed
Supports	i) Yes ii) Yes iii) Yes iv) Yes v) No
Hold Time	N/A
Displacement Reference	N/A
Displacement Direction	N/A
Acceptance Criteria	No penetration of the external surface
Notes	N/A

C13.3.2 Secondary Roll Structure Tests

Centreline

Field	Description
Structure	Reference Survival Cell
Test Type(s)	~~Physical test to 100%~~ ~~Or,~~ Physical test to 57% with calculation ≥120%
Loaded Area(s) / Feature(s)	Secondary Roll Structure - **Centreline**
Load(s)	80kN (57%), 140 kN (100%), 168kN (120%)
Load Direction(s)	[+51.6, 0, −130.1]
Load Application Point(s)	Pad centre at [X_C, Y, Z] = [−785, 0, 830]
Load Application Method	Point load applied through rigid pad, perpendicular to the loading axis, with one translational degree of freedom along the loading axis
Pad / Adaptor Details	150 mm diameter flat rigid pad
Supports	i) Yes ii) Yes iii) Yes iv) Yes v) No
Hold Time	5s
Displacement Reference	Ground
Displacement Direction	Along loading axis
Acceptance Criteria	No failure of any part of the Survival Cell or any attachment between the Secondary Roll Structure and the Survival Cell.
Notes	Calculation methodology must be authenticated against physical test data over the load range 0–80 kN. Calculation uses Secondary Roll Structure per C12.4.2 with deformation simulated as elastic

Lateral

Field	Description
Structure	Reference Survival Cell
Test Type(s)	~~Physical test to 100%~~ ~~Or,~~ Physical test to 71% with calculation ≥120%

©2026 Fédération Internationale de l'Automobile

Loaded Area(s) / Feature(s)	Secondary Roll Structure - **Lateral**
Load(s)	100kN (71%), 140 kN (100%), 168kN (120%)
Load Direction(s)	[+93.2, ±104.5, 0] inward
Load Application Point(s)	Pad centre at [X_C, Y, Z] = [−590, ±233.5, 810]
Load Application Method	Point load applied through rigid pad, perpendicular to the loading axis, with one translational degree of freedom along the loading axis
Pad / Adaptor Details	150 mm diameter flat rigid pad
Supports	i) Yes ii) Yes iii) Yes iv) Yes v) No Optional additional cradle wrapping all four sides of the Survival Cell at the front end, providing lateral and vertical restraint; cradle may extend no further forward than XA = 0 and no further rearward than XA = 600
Hold Time	5s
Displacement Reference	Ground
Displacement Direction	Along loading axis
Acceptance Criteria	No failure of any part of the Survival Cell or any attachment between the Secondary Roll Structure and the Survival Cell
Notes	Calculation methodology must be authenticated against physical test data over the load range 0–50 kN. Calculation uses Secondary Roll Structure per C12.4.2 with deformation simulated as elastic

C13.3.3 Additional Secondary Roll Structure calculations

Field	Description
Structure	Reference Survival Cell
Test Type(s)	Calculation only (no physical test)
Loaded Area(s) / Feature(s)	Secondary Roll Structure attachments: a) Rear Attachments b) Front Attachment
Load(s)	a) 75kN per attachment b) 140kN total
Load Direction(s)	a) [0, 0, 1] b) [1, 0, 1]
Load Application Point(s)	N/A
Load Application Method	Point load applied through the Secondary Roll Structure attachments
Pad / Adaptor Details	N/A
Supports	i) Yes ii) No iii) Yes iv) Yes v) No
Hold Time	N/A
Displacement Reference	N/A
Displacement Direction	N/A
Acceptance Criteria	No failure of any part of the Survival Cell or any attachment
Notes	a) and b) calculated separately

©2026 Fédération Internationale de l'Automobile

C13.4 Survival Cell Load Tests

C13.4.1 Survival cell fuel tank side test

Field	Description
Structure	All Survival Cells
Test Type(s)	Physical test
Loaded Area(s) / Feature(s)	Fuel tank side
Load(s)	110 kN
Load Direction(s)	[0, ±1, 0] inward
Load Application Point(s)	Pad centre at [X_C, Z] = [100, 300]
Load Application Method	Point load, pad fully on outermost survival cell surface
Pad / Adaptor Details	225 mm diameter pad conforming to Survival Cell shape
Supports	i) No ii) Yes iii) Yes iv) Yes v) No
Hold Time	~~30 s~~ 5 s
Displacement Reference	Ground
Displacement Direction	Along loading axis
Acceptance Criteria	No structural failure of the inner or outer surfaces of the Survival Cell Permanent deformation ≤ 3 mm after 1 min of complete load release
Notes	One side only

C13.4.2 Survival cell wheel contact side test

Field	Description
Structure	All Survival Cells
Test Type(s)	Physical test
Loaded Area(s) / Feature(s)	Wheel contact side
Load(s)	100 kN
Load Direction(s)	[0, ±1, 0] inward
Load Application Point(s)	Pad centre at X_C = −1195 and mid-height of structure at that section
Load Application Method	Point load, pad fully on outermost survival cell surface
Pad / Adaptor Details	200 mm diameter pad conforming to Survival Cell shape
Supports	i) No ii) Yes iii) Yes iv) Yes v) No
Hold Time	~~30 s~~ 5 s
Displacement Reference	Across inside of Survival Cell
Displacement Direction	Along loading axis
Acceptance Criteria	No structural failure of the inner or outer surfaces of the Survival Cell Total deflection ≤ 15 mm Permanent deformation ≤ 3 mm after 1 min of complete load release
Notes	One side only

©2026 Fédération Internationale de l'Automobile

C13.4.3 Survival cell floor test

Field	Description
Structure	All Survival Cells
Test Type(s)	Physical test
Loaded Area(s) / Feature(s)	Survival Cell floor (fuel tank region)
Load(s)	25 kN
Load Direction(s)	[0, 0, +1]
Load Application Point(s)	Position determined by FIA Technical Delegate
Load Application Method	Point load, pad fully on outermost survival cell surface
Pad / Adaptor Details	200 mm diameter pad
Supports	i) No ii) Yes iii) Yes iv) Yes v) Yes ~~The chassis may be mounted in any orientation~~
Hold Time	~~30 s~~ 5 s
Displacement Reference	Ground
Displacement Direction	Along loading axis
Acceptance Criteria	No structural failure of the inner or outer surfaces of the Survival Cell Permanent deformation ≤ 1 mm after 1 min of complete load release
Notes	N/A

C13.4.4 Cockpit floor test

Field	Description
Structure	All Survival Cells
Test Type(s)	Physical test
Loaded Area(s) / Feature(s)	Cockpit floor
Load(s)	75 kN
Load Direction(s)	[0, 0, +1]
Load Application Point(s)	Pad centre at [X_C, Y] = [−600, 0]
Load Application Method	Point load, pad fully on outermost survival cell surface
Pad / Adaptor Details	200 mm diameter pad
Supports	i) No ii) Yes iii) Yes iv) Yes v) Yes
Hold Time	~~30 s~~ 5 s
Displacement Reference	Cockpit rim
Displacement Direction	Along loading axis
Acceptance Criteria	No structural failure of the inner or outer surfaces of the Survival Cell Permanent deformation ≤ 3 mm after 1 min of complete load release
Notes	N/A

©2026 Fédération Internationale de l'Automobile

C13.4.5 Cockpit rim tests

Field	Description
Structure	All Survival Cells
Test Type(s)	Physical test
Loaded Area(s) / Feature(s)	Cockpit rim side
Load(s)	50 kN
Load Direction(s)	[0, ±1, 0] inward
Load Application Point	Pad centre at X_C = −250; pad upper edge level with top of cockpit side
Load Application Method	Point(s) load, pad fully on outermost survival cell surface
Pad / Adaptor Details	50 mm diameter pad
Supports	i) Yes ii) Yes iii) Yes iv) Yes v) No
Hold Time	~~30 s~~ 5 s
Displacement Reference	Opposite inner cockpit surface
Displacement Direction	Along loading axis
Acceptance Criteria	No structural failure of the inner or outer surfaces of the Survival Cell Deformation ≤ 10 mm Permanent deformation ≤ 1 mm after 1 min of complete load release
Notes	N/A

C13.4.6 Cockpit Side Test

Field	Description
Structure	All Survival Cells
Test Type(s)	Physical test and calculation
Loaded Area(s) / Feature(s)	Cockpit side
Load(s)	300 kN
Load Direction(s)	≤ 15° to Y-axis
Load Application Point(s)	Pad centred at one of [X_C, Z]: a) [-720, 390] b) [-540, 390] c) [-360, 390] d) [-540, 250]
Load Application Method	Point load applied through ball joint, pad fully on outermost survival cell surface
Pad / Adaptor Details	225 mm diameter pad conforming to shape Optional composite spacer ≤ 275 mm diameter and ≤ 6 mm thick. The spacer must be composite with a quasi-isotropic laminate with Zylon, Dyneema, or Kevlar reinforcing
Supports	i) Yes ii) Yes iii) Yes iv) Yes v) No
Hold Time	≥ 5 s

©2026 Fédération Internationale de l'Automobile

Displacement Reference	Opposite inner cockpit surface
Displacement Direction	Along loading axis
Acceptance Criteria	No structural failure of inner or outer surfaces Total deflection ≤ 30 mm
Notes	Calculations required to show capacity to 380 kN - methodology authenticated against physical test (0–275 kN). F1 Teams will be notified of the randomly selected reference position (a–d) for the reference Survival Cell 3 weeks prior to their scheduled test date Subsequent Survival Cells will be tested in the same position

C13.4.7 Nose Push–off Test

Field	Description
Structure	Reference Survival Cell
Test Type(s)	Physical test and calculation
Loaded Area(s) / Feature(s)	Front impact structure attached to Survival Cell
Load(s)	Physical: 92 kN Calculation: 110 kN
Load Direction(s)	[0, ±1, 0] inward – one side only
Load Application Point(s)	$X_A = -600$ Mid-height of structure (as in C13.6.3.a)
Load Application Method	Point load
Pad / Adaptor Details	As in C13.6.3.a
Supports	i) No ii) Yes iii) Yes iv) No v) No X displacement of the pad may be restrained, provided the resulting friction does not impact the Y component of the load
Hold Time	~~30 s~~ 5 s
Displacement Reference	N/A
Displacement Direction	N/A
Acceptance Criteria	No failure of Survival cell or any attachment between structure and Survival Cell
Notes	Dummy FIS may be used: • 250 mm closest to Survival Cell identical to C13.6.2 design. • Must not increase the strength of the Survival cell or attachments Calculations must be conducted at 110 kN applied at same location

C13.4.8 Engine Separation

Field	Description
Structure	All Survival Cell
Test Type(s)	Calculation only (no physical test)

©2026 Fédération Internationale de l'Automobile

Loaded Area(s) / Feature(s)	Engine mount attachments to Survival Cell under accident conditions
Load(s)	$[F_X, F_Y, M_Z] = K \cdot [-1N, 5N, 3Nm]$
Load Direction(s)	See load described above
Load Application Point(s)	$[X_{PU}=0, 0, 210]$ via engine mounts using representative engine
Load Application Method	K increased to first mount failure Analysis repeated disconnecting failed fixing until 2 remain
Pad / Adaptor Details	N/A
Boundary Conditions	Fully fixed ahead of the seatback bulkhead
Hold Time	N/A
Displacement Reference	N/A
Displacement Direction	N/A
Acceptance Criteria	No significant structural failure of the Survival Cell Failure must remain local to engine mounts No significant exposure of the fuel cell
Notes	N/A

C13.4.9 Forward Survival Cell Test

Field	Description
Structure	Reference Survival Cell
Test Type(s)	Physical test
Loaded Area(s) / Feature(s)	Forward Survival Cell outer surface (surfaces defined in C12.2.2.g)
Load(s)	30 kN
Load Direction(s)	Normal to surface On plane Y=0
Load Application Point(s)	Between front of Survival Cell and $X_C=-1600$ Position determined by Technical Delegate, communicated 2 weeks before homologation.
Load Application Method	Point load, pad fully on outermost survival cell surface
Pad / Adaptor Details	100 mm in X Conforming to Survival Cell shape and contacting surfaces defined in C12.2.2.g
Supports	i) Yes ii) No iii) Yes iv) No v) No Cradle may be used on opposite side to react load
Hold Time	~~30 s~~ 5 s
Displacement Reference	Lower Inner Surface of the Survival Cell
Displacement Direction	Along loading axis
Acceptance Criteria	No structural failure of inner or outer surfaces Deflection < 5 mm
Notes	N/A

©2026 Fédération Internationale de l'Automobile

C13.5 Side Impact Structure

C13.5.1 Side Impact Structure Specification

Two impact absorbing structures must be fitted on each side of the Survival Cell and must be solidly attached to it. The purpose of these structures is to protect the driver in the event of a lateral impact and, in order to ensure this is the case, strength tests of the mountings must be carried out successfully. Details of the test procedure may be found in Articles C13.5.3 and C13.5.4.

The impact absorbing structures must be manufactured and mounted to the Survival Cell in accordance with the following specifications:

a. The construction and geometry of the structures may be found in the document FIA-F1-DOC-108.

b. The structures must be mounted with the principal axes of their prismatic mounting sections perpendicular to the plane Y=0. The structures may be rotated ±10° about an axis normal to Y=0 which passes through the centre of area of their outermost longitudinal vertical cross section.

   The centres of area of their outermost longitudinal vertical cross sections must be positioned:

   i. Longitudinally: between X_C= −500 and X_C= −375 for the upper structure and between X_C= −525 and X_C= −425 for the lower structure.

   ii. Vertically: between Z=400 and Z=550 for the upper structure and between Z=75 and Z= 100 for the lower structure.

   iii. Laterally: Within 15mm of each other.

   Refer to the drawings which may be found in the document FIA-F1-DOC-108.

   The side impact structures must be fully enclosed by bodywork, and hence no part of them should be exposed to the External Air Stream.

c. Mountings must be permanently bonded to the structures to enable them to be attached to the Survival Cell, each of them must :

   i. Incorporate a closed end and internal abutment to the impact structure that must be capable of withstanding the lateral load described in Article C13.5.4 without a structural contribution from the bonded interface.

   ii. Lie entirely inboard of a plane which lies 292mm inboard of the outermost longitudinal vertical cross section of the impact structure.

   iii. Be arranged in order that the outermost surface created by an interface between the mounting and structure lies on a vertical surface that is located between the plane defined in c.ii) and a vertical plane which intersects the leading and trailing edges of the structure no more than 357mm and 332mm inboard of the outermost longitudinal vertical cross section of the impact structure respectively.

   iv. Be arranged in order that the innermost extent of the bonded interface between the mounting and structure is offset inboard by a minimum of 44mm from the vertical surface defined in (iii) above.

©2026 Fédération Internationale de l'Automobile

v. Be arranged in order that the bonded interface covers the entire external area of the structure between the innermost and outermost extents defined in iii) and iv) above.

d. To allow for debris compaction, the internal volumes of the structures must be empty outboard of vertical planes which:

i. For the upper structure, intersects the leading, and trailing edges of the structure at least 342mm inboard of the outermost longitudinal vertical cross section of the impact structure. Furthermore, the projected area of the structure onto a Z−Plane, between this plane and the plane defined in c.ii) must be greater than 7440mm^2.

ii. For the lower structure, intersects the leading, and trailing edges of the structure at least 357mm inboard of the outermost longitudinal vertical cross section of the impact structure. Furthermore, the projected area of the structure onto a Z−Plane, between this plane and the plane defined in c.ii) must be greater than 9225mm^2.

No parts which, in the opinion of the FIA technical delegate, would prevent proper function of the impact structures in the event of a lateral impact may be present in the volume lying between X_C= −700 and X_C= −300, and between Z=50 and Z=600, and outboard of a plane 280mm inboard of the outermost longitudinal vertical cross section of the inboard most impact structure.

The following components may be placed in this volume;

i. Bodywork

ii. Components of the oil and coolant systems and charge air cooling (excluding any Secondary Heat Exchangers)

iii. Electrical systems (excluding electrical pumps and filters)

iv. Pneumatic pressure vessels (excluding regulators operating at over 5 barG inlet pressure)

v. Brake system, hydraulic system and pneumatic system hoses

vi. A thermal store for the driver cooling system that has been homologated according to Article C14.6.8 and associated pipework.

Provided that;

i. The construction of any of the components is such that they would not, in the opinion of the FIA technical delegate, cause significant damage to the Survival Cell in the event of a lateral impact,

ii. Components of the oil and coolant systems and charge air cooling, electrical units and pneumatic pressure vessels are no closer than 20mm at any point to the closest impact structure,

iii. Electrical units and pneumatic vessels;

have a total volume that does not exceed 2 litres on each side of the Survival Cell,

have an individual assembly density of no more than 1500 kg/m^3,

are orientated such that corners or edges are not likely to cause significant damage to the Survival Cell in the event of a lateral impact.

©2026 Fédération Internationale de l'Automobile

C13.5.2 Side impact structure push–off

Field	Description
Structure	Reference Survival Cell
Test Type(s)	Physical test: a) and c) Calculation: All
Loaded Area(s) / Feature(s)	a) Upper and lower side impact structures b) Upper and lower side impact structures c) Lower side impact structure d) Upper side impact structure
Load(s)	a) Upper: 40 kN; Lower: 60 kN - applied simultaneously b) Upper: 40 kN; Lower: 60 kN - applied simultaneously c) 35 kN d) 27 kN
Load Direction(s)	a) [+1, 0, 0] b) [−1, 0, 0] c) [0, 0, +1] d) [0, 0, −1]
Load Application Point(s)	Pad centre of area 100 mm inboard of the centre of the outermost longitudinal vertical cross-section of the relevant impact structure
Load Application Method	Ball-jointed pad, ball joint at centre of area of pad
Pad / Adaptor Details	a) 100 mm in Y × 100 mm in Z ball-jointed pad b) 100 mm in Y × 100 mm in Z ball-jointed pad c) 200 mm in Y × 100 mm in Z ball-jointed pad d) 200 mm in Y × 100 mm in Z ball-jointed pad
Supports	i) No ii) Yes iii) Yes iv) Yes v) Yes
Hold Time	5 s
Displacement Reference	N/A
Displacement Direction	N/A
Acceptance Criteria	No failure of any structure or any attachment between the structure and the Survival Cell
Notes	Tests may be performed on either side of the Survival Cell (±Y). ~~The Survival Cell used must already have passed the tests of C13.3 and C13.4.~~ Dummy test parts may be used in place of the impact structure provided they incorporate identical mounting details (per C13.5.1) and do not increase the strength of the attachments.

C13.5.3 Side impact structure squeeze tests

Field	Description
Structure	Reference Survival Cell
Test Type(s)	Physical test and calculation (see note)
Loaded Area(s) / Feature(s)	Upper and lower Side Impact Structures

©2026 Fédération Internationale de l'Automobile

Load(s)	Upper: 100 kN; Lower: 150 kN - applied simultaneously
Load Direction(s)	[0, ±1, 0] inward
Load Application Point(s)	Loading through the centre cross-section of each impact structure, at a point 292 mm inboard of the outermost longitudinal vertical cross-section of that impact structure (upper and lower)
Load Application Method	Hemispherical pad or ball joint
Pad / Adaptor Details	N/A
Supports	i) Yes ii) Yes iii) Yes iv) Yes v) No
Hold Time	5 s
Displacement Reference	N/A
Displacement Direction	N/A
Acceptance Criteria	No failure of the Survival Cell or any attachment between the structures and the Survival Cell
Notes	Test may be performed on either side of the Survival Cell (±Y). The Survival Cell used must already have passed the tests of C13.3 and C13.4. Dummy test parts may be used in place of the impact structure provided they incorporate identical mounting details (per C13.5.1) and do not increase the strength of the attachments. Each team must supply detailed calculations which clearly show that the mountings of the upper and lower side impact structures satisfy the requirement of C13.5.1.(c).(i).

C13.6 Front Impact Structure

C13.6.1 Front Impact Structure Specification

An impact absorbing structure (FIS) must be fitted in front of the Survival Cell. This structure must not be an integral part of the Survival Cell but must be solidly attached to it and be arranged symmetrically about the plane Y=0.

The FIS must affix to the Survival Cell using a minimum of four attachments having the same nominal strength.

Excluding fairings or any bodywork defined as Front Wing Assembly; Between $X_{FIS} = 50$ and $X_A = -100$, the intersection of the FIS with an X−plane must create a single cross section where:

a. The height, width and enclosed area must increase monotonically with increasing X distance.

b. At X_{FIS}=50, the enclosed area must exceed 9 000mm^2 and must enclose a rectangle 120mm wide by 65mm high.

c. At X_{FIS}=150, the enclosed area must exceed 20 000mm^2.

d. Between X_A=−400 and X_A=−100, the enclosed area must exceed a value given by a linear taper between 45 000mm^2 and 60 000mm^2 respectively.

e. Ahead of X_{FIS}=50, no part may lie above Z=235.

©2026 Fédération Internationale de l'Automobile

f. Behind X_{FIS}=50, no part may lie above a plane that is normal to Y=0 and contains points [X_{FIS}, Z]; [50, 235] and [150, 305].

g. Behind X_{FIS}=250, with the exception of bodywork joggles, any normal to the external surface of the Impact structure must not subtend an angle greater than 25° to an X−plane.

h. All lines drawn normally and externally to a cross−section taken at X_A= −100 must not cross the plane Y=0.

Once the requirements of (a) to (h) have been met, minimal apertures may be applied for mechanical components or sensors.

Any bodywork ahead of the plane defined in (f), above Z=235, and less than 166mm from the centre plane must be constructed of laminate with an areal weight of reinforcing, no greater than 800gm^{-2} with optional aramid or foam core.

C13.6.2 Front Impact Structure Homologation

~~Two identical~~ One FIS~~s~~ must be presented for homologation. By random ~~allocation by the FIA delegate:~~ selection by the FIA on the day of the homologation, this FIS will be subject to either;

i. ~~One will be subject to~~ The push-off tests described in ArticlesC13.6.3.a and C13.6.3.b followed by the dynamic test described in ArticleC13.6.5.

~~and~~ or

ii. ~~The second will be subject to~~ The push-off test described in ArticlesC13.6.3.c followed by the dynamic test described in ArticleC13.6.6.

~~In the case where a dynamic test did not meet the acceleration requirements, at the discretion of the FIA, the F1 Team may be permitted to repeat only the failed test.~~

C13.6.3 Front Impact Structure Push−Off Tests

During these tests, the FIS ~~must~~ may either be mounted to the same fixture that is used for the tests described in Article C13.6.5 and C13.6.6, or the Survival Cell.

a. **Lateral Push−off Test**

Field	Description
Structure	Front Impact Structure
Test Type(s)	Physical test
Loaded Area(s) / Feature(s)	Lateral push-off test
Load(s)	92 kN
Load Direction(s)	[0, ±1, 0] inward – one side only
Load Application Point(s)	X_A = −600 Mid-height of structure
Load Application Method	Ball-jointed load application X displacement of the pad may be restrained, provided the resulting friction does not impact the Y component of the load
Pad / Adaptor Details	200 mm in X, positioned symmetrically about X_A = −600

Boundary Conditions	FIS ~~must~~ may either be mounted to the same fixture that is used for the tests described in Article C13.6.5 and C13.6.6, or the Survival Cell
Hold Time	~~30 s~~ 5 s
Displacement Reference	N/A
Displacement Direction	N/A
Acceptance Criteria	No failure of the structure or of any attachment between the structure and the fixture
Notes	Pad stiffness is at the team's discretion

b. Wing Section Push–off Test

Field	Description
Structure	Front Impact Structure
Test Type(s)	Physical test
Loaded Area(s) / Feature(s)	Top surface of wing section, on both sides simultaneously
Load(s)	3.88 kN per side
Load Direction(s)	[+2.2, 0, −3.2] kN
Load Application Point(s)	X: Load vector intersects the top surface of the wing section between 75 mm and 200 mm behind the leading edge of the forward wing element Y = ±250mm
Load Application Method	Ball-jointed load application
Pad / Adaptor Details	Rectangular pad, ≤ 100 mm in Y and ≤ 200 mm in X Lower surface shaped to match the wing section Each pad must lie entirely between Y=±200 mm and Y=±300 mm
Boundary Conditions	FIS ~~must~~ may either be mounted to the same fixture that is used for the tests described in Article C13.6.5 and C13.6.6, or the Survival Cell
Hold Time	~~30 s~~ 5 s
Displacement Reference	N/A
Displacement Direction	N/A
Acceptance Criteria	No failure of the impact structure or of any attachment between the impact structure and the wing section
Notes	N/A

c. Lateral Push–off Test to Failure

Field	Description
Structure	Front Impact Structure
Test Type(s)	Physical test
Loaded Area(s) / Feature(s)	Lateral push-off test to failure
Load(s)	Increased progressively until failure

©2026 Fédération Internationale de l'Automobile

Load Direction(s)	[0, ±1, 0] inward – one side only
Load Application Point(s)	X_A = −900 Mid-height of structure
Load Application Method	Ball-jointed load application X displacement of the pad may be restrained, provided the resulting friction does not impact the Y load
Pad / Adaptor Details	200 mm in X, positioned symmetrically about X_A = −900
Boundary Conditions	FIS ~~must~~ may either be mounted to the same fixture that is used for the tests described in Article C13.6.5 and C13.6.6, or the Survival Cell
Hold Time	N/A
Displacement Reference	N/A
Displacement Direction	N/A
Acceptance Criteria	73.5kN > Failure load > 52.5 kN Load supported by the structure falls to ≤ 50 % of the maximum load reached and an area of failure is apparent Failure must occur behind X_A = −650 (i.e. at X_A > −650, between the load application plane and the Survival Cell)
Notes	Pad stiffness is at the team's discretion

C13.6.4 Front Impact Structure Dynamic Tests – General Requirements

Field	Description
Structure	Front Impact Structure
Test Type(s)	Physical Dynamic Test
Assembly info	FIS fitted with all parts that could materially affect the test outcome
Impactor	Trolley
Impactor Mass	900 kg (+1 % / −0) trolley including test structure
Impactor End-Stops	A system to manage excess residual energy, not entirely absorbed by a FIS, must not in any way modify the results during a successful test
Impactor Direction	[+1, 0, 0]
Boundary Conditions	FIS solidly fixed to the impact wall through its mounting points, in a way that does not increase its impact resistance
Deceleration profile	a) Raw deceleration ≤ 13.5 / X^1.13 g, from first deformation to X_A = −382 (X in metres from X_A = 0, calculated by the test laboratory) b) Peak deceleration ≤ 40 g c) CFC60-filtered: limit curve (i) may be exceeded by ≤ 10 g (absolute ceiling 43 g) for ≤ 15 ms cumulative
Other Acceptance Criteria	No damage to the mountings of the FIS to the test fixture

C13.6.5 Front Impact Structure Dynamic Test 1

As well as the general requirements defined in Article C13.6.4;

©2026 Fédération Internationale de l'Automobile

Field	Description
Structure	Front Impact Structure already subjected to the tests C13.6.3 (a) & (b)
Impactor Velocity	> 17 m/s
Deceleration profile	Average deceleration over the first 150mm of FIS deformation > 2.5 g
Remaining length	Remaining FIS length after impact > 150 mm, measured between the furthest point reached by the trolley and the most forward of: a) Any significant change in FIS construction (e.g. inserts, openings); or b) Any mechanical components mounted to the Survival Cell ahead of the front bulkhead, except for components permitted below Subject to approval by the FIA Technical Delegate, the following components may be placed in the 150mm remaining length: i) Brake reservoirs, their mounting brackets, associated pipes and fittings ii) Electrical systems with an individual assembly density of no more than 1500kg/m^3 iii) Composite internal bodywork panels with a wall thickness less than 1.5mm iv) Parts of the SM adjustment system v) A thermal store for the driver cooling system that has been homologated according to Article C14.6.8 and associated pipework

C13.6.6 Front Impact Structure Dynamic Test 2

As well as the general requirements defined in Article C13.6.4:

Field	Description
Structure	Front Impact Structure already subjected to the tests C13.6.3 (c) An F1 Team may trim material from the FIS before this test. Any trim should be to an X-Plane at $X_A \geq -650$. A chamfer, 10mm long in X may be applied to the cut surface
Impactor Velocity	> 14 m/s

C13.7 Rear Impact Structure

C13.7.1 Rear Impact Structure Definition

An impact absorbing structure must be fitted behind the Gearbox in accordance with the following specifications:

a. Between X_{DIF}=325 and X_{DIF}=750, the external geometry of the Rear Impact Structure must conform to RV−TAIL−RIS with a manufacturing tolerance of ±0.5mm.

b. The rearmost face of the structure must be positioned at X_{DIF}=750. The upper surface of the structure on Y=0 must lie at Z=372.5. A tolerance of ±2mm will be accepted for manufacturing reasons only.

c. To minimise the likelihood of the structure penetrating a Survival Cell, it must be designed so that the majority of its material lies evenly around its perimeter. The perimeter of any X−plane

©2026 Fédération Internationale de l'Automobile

between points 50mm forward of its rear face and 200mm forward of its rear face must be of a uniform construction and have a minimum thickness of 1.6mm. Material with a specific gravity of less than 1 will not be considered when calculating these thicknesses and, furthermore, any internal structure must not be thicker than any part of the perimeter at that section.

Only those parts of the structure which genuinely contribute to its performance during the impact test, and which are designed and fitted for that sole purpose, will be considered when assessing compliance with any of the above.

d. No parts which, in the opinion of the FIA technical delegate, would prevent proper function of the impact structure in the event of a rear impact may be present behind X_{DIF}= 325.

The Rear Impact structure is classed as TRC.

C13.7.2 Rear impact Structure Static Load Tests

Field	Description
Structure	Rear impact structure, Gearbox, and attachment between them
Test Type(s)	Physical test
Loaded Area(s) / Feature(s)	Rear impact structure
Load(s)	40kN
Load Direction(s)	a) [0, ±1, 0] inward b) [0, 0, +1] c) [0, 0, −1]
Load Application Point(s)	Outer surface of rear impact structure at X_{DIF} = 500: a) Side (lateral face), at mid-height b) ~~Top~~ Bottom surface, on plane Y = 0 c) ~~Bottom~~ Top surface, on plane Y = 0
Load Application Method	Ball-jointed load application
Pad / Adaptor Details	Pad dimensions: a) 100 mm in X and ≥ 150 mm in Z b) 100 mm in X and ≥ 100 mm in Y c) 100 mm in X and ≥ 100 mm in Y Pad must be centred at the load application point and must fully conform to the RIS shape
Boundary Conditions	Gearbox solidly fixed by the engine studs. The test load may be reacted ahead of any joint between the impact structure and the Gearbox Case, provided no support increases the strength of this joint.
Hold Time	~~30 s~~ 5 s
Displacement Reference	N/A
Displacement Direction	N/A
Acceptance Criteria	No failure of the rear impact structure, of the Gearbox, or of the attachment between them
Notes	Tests a) b) and c) done separately

C13.7.3 Rear impact Structure Dynamic Test

Field	Description
Structure	Rear Impact Structure with Gearbox attached, already subjected to the tests C13.7.2
Test Type(s)	Physical Dynamic Test
Assembly info	All parts fitted behind the rear engine face that could materially affect the test outcome must be fitted, including suspension members if mounted on the structure. More details in FIA-F1-DOC-002-03
Impactor	Flat striker, 450 mm (±3 mm) wide × 550 mm (±3 mm) high, with optional 10 mm radius on all edges. Lower edge at Z = 0 (±3 mm)
Impactor Mass	875kg (+1%/−0)
Impactor Velocity	> 11 m/s
Impactor End-Stops	A system to manage excess residual energy, not entirely absorbed by a RIS, must not in any way modify the results during a successful test
Impactor Direction	[+1, 0, 0], vertically oriented striking face, no rotation allowed at any time during the test
Boundary Conditions	RIS and Gearbox solidly fixed to the ground; additional supports permitted provided they do not increase the impact resistance of the parts being tested
Deceleration profile	a) Raw deceleration ≤ 15 + 26.5·X g, where X = longitudinal distance from start of impact in metres, calculated by the test laboratory b) Peak deceleration ≤ 25 g c) For X > 0.225 m, limits (a) and (b) may be exceeded for ≤ 15 ms cumulative
Other Acceptance Criteria	All structural damage must be contained behind $X_R = 0$

C13.8 Steering Column Impact Test

Field	Description
Structure	Steering column
Test Type(s)	Physical Dynamic Test
Assembly info	The parts referred to in Article C10.5.5 must be fitted to a representative test structure; any other parts which could materially affect the outcome of the test must also be fitted
Impactor	Hemispherical, 165 mm (±1 mm) diameter
Impactor Mass	8 kg (+1%/−0)
Impactor Velocity	≥ 7 m/s
Impactor End-Stops	N/A
Impactor Direction	Along the main axis of the steering column. Centre of the hemisphere must strike the centre of the steering wheel. Striker may not pivot in any axis during the test
Boundary Conditions	Test structure solidly fixed to the ground; any additional supports must not increase the impact resistance of the tested parts

©2026 Fédération Internationale de l'Automobile

Deceleration profile	Peak deceleration ≤ 80 g, exceeded for ≤ 3 ms cumulative, measured only in the direction of impact
Other Acceptance Criteria	a) All substantial deformation must be contained within the steering column b) The steering wheel quick-release mechanism must still function normally after the test

C13.9 Headrest Load Test

Field	Description
Structure	Headrest fitted with 'pink' Confor foam
Test Type(s)	Physical test
Loaded Area(s) / Feature(s)	Back of the headrest
Load(s)	$P = (700 \times m_{HR})$ N, where m_{HR} is the mass (in kg) of the complete headrest fitted with 'pink' Confor foam
Load Direction(s)	[−1, 0, 0]
Load Application Point(s)	Two points on the back of the headrest at Z = 630 mm, Y = ±130 mm.
Load Application Method	a) Direct application at each of the two points [-P/2, 0, 0] applied simultaneously, or b) Two pull rods, evenly sharing the total load [−P, 0, 0], passing through holes in the headrest of diameter ≤ 2.5 mm
Pad / Adaptor Details	Optional load spreader plates permitted, provided each spreader is between 80 mm and 180 mm from the car centre-plane
Boundary Conditions	a) Headrest mounted in a dummy cockpit surround, or b) Headrest mounted in the car; load reacted against the Secondary Roll Structure forward mount
Hold Time	N/A
Displacement Reference	N/A
Displacement Direction	N/A
Acceptance Criteria	At the test load: • The pegs at the rear of the headrest remain engaged in the holes in the (dummy) chassis • No failure of the headrest backing structure • No failure of the quick-release mountings
Notes	Setups a) and b) are alternatives; the team may choose either

C13.10 Wheel Rim Impact Test

Field	Description
Structure	Outer flange of the wheel Rim
Test Type(s)	Physical Dynamic Test (drop test, derived from ISO 7141:2022)
Assembly info	Rim fitted with tyre, inflated to 150 ± 10 kPa
Impactor	Rectangular-section striker, overlapping the rim by 25 ± 1 mm

©2026 Fédération Internationale de l'Automobile

Impactor Mass	75 kg
Impactor Velocity	≥ 6 m/s before contacting the tyre
Impactor End-Stops	N/A
Impactor Direction	[0, 0, −1] in lab frame, vertical drop, striking the highest point of the rim
Boundary Conditions	Compliant fixture with calibrated compliance of 7.5 ± 0.75 mm under a 9.8 kN vertical load applied at the wheel fixing Wheel nut tightened to ≥ 500 Nm. Rim mounted on the fixture with the outer flange uppermost and at 13° to horizontal
Deceleration profile	N/A
Other Acceptance Criteria	Wheel fails the test if either: a) Presence of Visible fracture (not detected by dye penetrant) penetrating through the barrel, spokes, or hub of the rim, *and* not directly below the area struck by the face plate of the impactor. b) Presence of fractures directly below the area of the rim section struck by the face plate of the striker, which can be identified as through-thickness without removing the tyre. c) The tyre loses > 100 kPa of air pressure within 1 min after impact
Notes	Equipment, calibration, and test procedure detailed in FIA-F1-DOC-002-03

2027

ARTICLE C14: SAFETY EQUIPMENT

Advisory Committee: TAC
Governance: F1 Commission / WMSC

C14.1 Fire Extinguishers

All cars must be fitted with a fire extinguishing system which:

a. Will discharge into the Cockpit only.

b. Is approved according to the FIA Standard 8876−2022 and homologated for Class II fires, with the exception of:

   i. The pressure gauge required by section 4.6 of FIA Standard 8876−2022 for pressurised systems, provided that the F1 Team supplies an on- or off-car solution to verify that the system is correctly pressurised at filling and test times.

   ii. The electrical box required by section 4.5.1 of FIA Standard 8876−2022, provided that the F1 Team supplies an on- or off-car solution to verify that the system operates without anomaly and is ready to be activated.

   iii. The requirements of section 4.5.2 of FIA Standard 8876−2022, provided that the activation switch installation achieves an equivalent ingress protection.

c. Must be installed and maintained according to the manufacturer's recommendations.

The bottle and firing mechanism must be situated within the Survival Cell and all extinguishing equipment must withstand fire.

The triggering system must have its own source of energy and it must be possible to operate all extinguishers should the main electrical circuits of the car fail. The F1 Team may source its own specification of battery and energy capacity, but it must fulfil the requirements of section 3.3.2 of FIA Standard 8876−2022.

The driver must be able to trigger the extinguishing system manually when seated normally with the safety harness fastened and the steering wheel in place.

Furthermore, a means of triggering from the outside must be combined with the circuit breaker switches described in Article C8.7.

All extinguisher nozzles must be included in the homologation of the fire extinguishing system. At least one nozzle must be aimed at the driver's midriff.

C14.2 Rear view mirrors

C14.2.1 All cars must have two mirrors positioned symmetrically about the car's centre plane and mounted so that the driver has visibility to the rear and both sides of the car.

C14.2.2 The reflective surface of each mirror must satisfy the following conditions:

a. It must be contained within RV−MIRROR−BODY and not be obstructed by the Mirror Body, either towards the driver or in the rearward direction.

©2026 Fédération Internationale de l'Automobile

b. Its four edges must project orthogonally onto the edges of a vertical rectangle which is 200mm wide and 50mm high (+2mm/−0mm for both dimensions), with a radius of up to 10mm applied to each corner.

c. Over its whole area it must:

i. not contain any concave parts.

ii. be tangency continuous.

iii. not have any normal radius of curvature less than 400mm.

d. When cut by any Z−Plane and before any radius is applied to the corners:

i. the normal to the curve at its inboard end must subtend an angle of between 24deg and 28deg to the X axis, pointing towards the Y=0 plane.

ii. the angle between normals to the curve at its inboard and outboard ends must be greater than 8 degrees.

For the avoidance of doubt, any non−reflective parts of the mirror must be contained within the Mirror Body.

C14.2.3 F1 Teams will be required on request to supply the FIA with CAD data with regard to the visibility of their mirror arrangement, and the FIA will retain the right to modify the position of the volume defined in Article C3.6.4 (a) should it become apparent that the mirror position does not meet the safety requirements.

C14.3 Rear lights

C14.3.1 All cars must have three rear lights which:

a. Have been supplied by FIA designated manufacturers.

b. Are clearly visible from the rear.

c. Can be switched on by the driver when seated normally in the car.

C14.3.2 The first such light must have:

a. Its rear face on an X−Plane and at least 750mm behind X_{DIF}=0.

b. The centre of its rear face on Y=0.

c. The centre of its rear face between Z=295 and Z=305.

C14.3.3 Two further lights

a. Must be fitted, one on each side of the car, within the bodywork defined in Article C3.11.2 and in full compliance with Article C3.11.2.

b. The normal to the plane of the lens of the LED elements must be no more than 5° from the X−axis.

c. Lie in their entirety between Z=700 and Z=870.

d. Respect the directionality of the lens of the LED elements, which should point in a nominally horizontal direction towards the rear of the car.

e. Be fitted in accordance with the instructions detailed in the document FIA-F1-DOC-025.

C14.3.4 Both types of rear light are classed as SSC, and all the relevant details can be found in the Document FIA-F1-DOC-025 Appendix to the Technical and Sporting Regulations.

C14.4 Safety Tethers

C14.4.1 Wheel Tethers

Each wheel must be fitted with three tethers compliant with FIA standard 8864–2022. The sum of the three maximum absorbed energy, as per FIA Technical List n.93, must be at least 15kJ. No suspension member may contain more than two tethers.

Each tether:

a. must have a minimum energy absorption of 3kJ.

b. must connect the upright to the Survival Cell or the upright to the Gearbox Case

c. must have its own separate attachments at both ends, which:

   i. are able to withstand a tensile force of 70kN in any direction within a cone of 90° (included angle) measured from the load line of the relevant suspension member.

   ii. Do not bend the tether round a radius of less than 7.5mm at the specified load.

   iii. Do not share a common fastener and are designed such that the failure of one attachment point will not lead to the direct failure of an adjacent attachment point.

d. Must register a peak force during homologation of no greater than 70kN.

Furthermore, at least two of the three tethers must have attachment points which:

e. On the Survival Cell are separated from each other by at least 300mm in the X–direction, measured between their centres.

f. On the Gearbox Case are separated from each other by at least 250mm in the X–direction, measured between their centres.

g. On each wheel/upright assembly are separated by at least 90° radially with respect to the rotational axis of the wheel and 100mm measured between the centres of the two attachment points.

Each F1 Team must supply detailed geometries which clearly show that all of the three tethers will independently prevent a Complete Wheel from making contact with a driver's head during an accident, with the Secondary Roll Structure fitted, assuming 40% elongation in each tether.

C14.4.2 Rear Impact Structure Tether

The rear impact structure must be attached to the Gearbox Case with a tether with a cross sectional area of at least 20mm^2, a minimum breaking strength of 24kN and a length of at least 600mm. The attachment to the Gearbox Case must be ahead of X_{DIF}=300 and must not bend the tether round a radius of less than 3mm at the specified load. This fixing should withstand a load of 24kN in a rearward direction at up to 22.5° from the X–axis. The attachment to the RIS should be behind X_{DIF}=650, and must not bend the tether round a radius of less than 3mm at the specified load. This fixing should withstand a load of 24kN in a forward direction.

C14.5 Safety Harnesses

It is mandatory to wear a safety harness that has been homologated to FIA Standard 8853–2016. The safety harness must be used in accordance with the safety harness manufacturer's instructions and must be securely fixed to the car. Approved harnesses are listed in Technical List n°57.

C14.6 Driver Cooling System

C14.6.1 The driver cooling system is defined as a system, the sole purpose which, is to provide additional cooling for the driver.

The driver cooling system may use the phase change of a substance in its operation.

During a Race or Sprint Session for which a Heat Hazard has been declared;

a. A system that uses a continuous process must be capable of extracting heat from the driver at a rate of at least 200W with an ambient temperature of 40°C.

b. A system that uses stored thermal energy must have a reserve of at least 1.1MJ, calculated with the final reservoir temperature below 10°C.

C14.6.2 Any refrigerant must have a Global Warming Potential of less than 10.

C14.6.3 Solid CO_2 (dry ice) must not be used in the driver cooling system.

C14.6.4 The cooling medium within the driver's equipment may only be air, water, or (in exception to Appendix L Chapter III Article 2) an aqueous solution of sodium chloride, potassium chloride or propylene glycol.

C14.6.5 Subject to the approval of the FIA, parts of the driver cooling system may be placed within RV–COCKPIT–DRIVER, in exception to Article C12.5.4.c, or within the lower 50mm of the volume defined in Article C12.5.4.a (but not within the volume defined in Article C12.5.4.b).

C14.6.6 For the sole purpose of supplying air to a heat exchanger which is part of the driver cooling system, the aperture C3.16.1 may be enlarged, with an increase in area of 1000mm^2.

C14.6.7 The following fans are permitted:

a. A fan of up to 12W for the sole purpose of drawing air through the condenser of a refrigeration system.

b. A fan for the sole purpose of feeding cooled air into the driver's overalls.

C14.6.8 Parts of the thermal store for the driver cooling system which are in the volumes defined in Articles C13.5.1.d or C13.6.5.i-v must be homologated as follows.

The Thermal Store:

a. complete and filled with coolant, must be cooled to its minimum operating temperature.

b. must be placed between the platens of a compression testing machine. The platens must be large enough that the parts of the Thermal Store within the specified volume remain between them throughout the test.

©2026 Fédération Internationale de l'Automobile

c. must be orientated so that the test direction is aligned with the Y-Axis for components paced in the volume defined Article C13.5.1.d or the X-Axis for components paced in the volume defined Article C13.6.5.i-v.

d. must be crushed until the distance between the platens is less than 50mm.

During the test, the load must not exceed 20kN

C14.6.9 Article C7.3.1 will not apply to parts of the driver cooling system.

C14.7 Lateral Safety lights

C14.7.1 All cars must be fitted with two lateral safety lights (one on each side of the car), which must:

a. have been supplied by an FIA designated manufacturer.

b. lie within RV-LATERAL-SAFETY-LIGHT as positioned in Article C3.7.5.

c. offer an unobscured view of the highlighted surface of RV-LATERAL-SAFETY-LIGHT from the front, without the tyres present, and side of the car.

C14.7.2 This lateral safety light is classed as SSC, and all the relevant details can be found in the Document FIA-F1-DOC-026.

C14.8 Driver's Drink System

All cars must be fitted with a system for providing the driver with drink. The system must have a capacity of between 1 litre and 1.5 litres and must be located between X_C=−1400 and X_C=0.

2027

ARTICLE C15: MATERIALS

C15.1 General Principles

Advisory Committee: TAC and PUAC
Governance: F1 Commission / PU Manufacturers' Governance Agreement / WMSC

C15.1.1 Materials used in the construction of the Formula One car – excluding the Power Unit – are limited to those defined in article C15.2 and to the specific exceptions in article C15.4.

C15.1.2 Materials and processes used or prohibited in the Power Unit are defined in Articles C15.6 to C15.9.

C15.1.3 All materials used must be commercially available.

C15.1.4 No parts of the car may be made from metallic materials that have a specific modulus of elasticity greater than 40 GPa/(g/cm3). Tests to establish conformity will be carried out in accordance with FIA Test Procedure 03/03, contained in FIA-F1-DOC-114.

C15.1.5 An F1 Team or PU Manufacturer may submit a proposal to the FIA to add or to remove a material from this article. The proposal should include mechanical characteristic, cost, and supply considerations. The proposal will be considered by the TAC or PUAC after the F1 Teams or PU Manufacturers have reviewed the proposal.

C15.1.6 Materials that are a direct equivalent to permitted materials may be added by presenting justification to the FIA, who may at its absolute discretion ask more information or tests to be carried out to support the claim.

C15.1.7 F1 Teams are required to make submissions of the materials that they will use on the car as part of their annual homologation submission. These shall be listed according to the categories in Article C15.2. This information will be compiled, anonymised, and circulated to the relevant group.

C15.1.8 Unless explicitly permitted otherwise for a specific application, only material approved by the FIA Technical Department may be used on the Power Unit. The approval of the FIA Technical Department is conditional upon the material concerned being available on a non−exclusive basis and under normal and equivalent commercial terms to all PU Manufacturers. The approval request form must be sent by the PU Manufacturer to the FIA before the 1st of November of the preceding year. This information will be compiled, anonymised, and circulated to all PU Manufacturers by the end of March of the same year.

C15.1.9 The whole percentage range of an element, as declared in the applicable international standard for a specific alloy, shall be inside all the limits set in these Regulations.

C15.2 Permitted Materials (Components Outside the PU Perimeter)

Advisory Committee: TAC
Governance: F1 Commission / WMSC

With the exception of materials specifically permitted for certain components, as listed in Article C15.4, only the following materials may be used:

C15.2.1 Metallic Materials – Not Used for Additive Manufacture

a. Iron based Alloys: any

©2026 Fédération Internationale de l'Automobile

b. Aluminium based Alloys:

i. Cast Aluminium based alloys from the 2xx, 3xx, 4xx, 5xx and 7xx series.

ii. Wrought Aluminium based alloys from the 1xxx, 2xxx, 3xxx, 4xxx, 5xxx, 6xxx and 7xxx series ~~containing less than 1% Lithium~~ where: -

(A) Lithium content is no greater than 2.15wt%

(B) Silver content is no greater than 1.1 wt%

~~iii. 2050 with a chemical composition conforming to UNS A92050.~~

~~iv. 2055 with a chemical composition conforming to UNS A92055.~~

~~v. 2099 with a chemical composition conforming to UNS A92099~~.

c. Magnesium Alloys:

As defined under ASTM B107−13

i. UNS M18432, WE43B

ii. UNS M18434, WE43C

iii. UNS M18410, WE54A

iv. UNS M11800, AZ80A

~~d. Ni or Co based Superalloys:~~

~~i. UNS N06625; W.Nr.2.4856 Inconel 625~~

~~ii. UNS N07718; W.Nr.2.4668 Inconel 718~~

~~iii. UNS N07001; W.Nr.2.4654 Waspaloy~~

~~iv. UNS R30035; W.Nr2.4999 MP35N~~

~~v. UNS R30159 MP159~~

d. Nickel based alloys must respect the following: -

i. The combined total content of aluminium, titanium, niobium and tantalum must be <10.5 wt%

ii. The hafnium content must be <1.80 wt%.

e. Cobalt based alloys must respect the following and may only be used on or above Z=0 (i.e. not in RV−PLANK).: -

i. The tungsten content must be <16.0 wt%

ii The carbon content must be <2.40 wt%.

~~e. Titanium Alloys:~~

~~i. Low-alloy titanium alloys containing at least 97.5% Ti and less than 1% of any other element.~~

©2026 Fédération Internationale de l'Automobile

~~ii. Grade 9 Ti3Al2.5V~~

~~iii. Grade 5; grade 23 TiAl6V4, Ti64~~

~~iv. UNS R54620, Ti6242, Ti6242Si~~

~~v. UNS R56260 Ti6246~~

~~vi. UNS R56410 Ti10-2-3~~

~~vii. UNS R58153 Ti15-3-3-3~~

~~viii. UNS R58640 Allvac 38-644~~

~~ix. Ti-5Al-5Mo-5V-3Cr Ti5553~~

~~x. Ti15Mo3Nb3Al0.2Si Timetal Ti21S~~

~~xi. Timetal Ti1100~~

~~xii. Ti 6Cr-5Mo-5V-4Al~~

f. Titanium based alloys must respect the following: -

i. Total alloying additions must be <30.0 wt%

ii. The aluminium content must be <7.0 wt%

iii The total content of beta stabilzing elements must be <25 wt%. Beta stabilizing elements are: V, Zr, Nb, Mo, Hf, Ta, Re, Cr, Mn, Fe, Co, Ni, Cu, Pd, Ag, W, Pt, Au.

g. Copper Alloys containing less than ~~2.5~~2.2% Beryllium.

h. Tungsten Alloys: any

i. Particulate Reinforced Aluminium Alloy Matrix Composites where the following restrictions apply: -

i. The volume fraction of reinforcement must be < 26.0%.

ii. The d50 particle size of the reinforcement must be < 10.0µm.

iii The following reinforcement phases are prohibited: -

(A) Tungsten Carbide (WC).

(B) Diamond

(C) Cubic Boron Nitride (CBN)

~~i. SupremEX 225XE~~

~~ii. SupremEX 225XF~~

C15.2.2 Metallic Materials Used for Additive Manufacture

Components produced by additive manufacture can be made from materials in the following list. A full list of applicable standards and criteria for acceptance of metals under the provisions of Article C15.2.5 in this list is given in the document FIA-F1-DOC-114.

a. No material to be used for additive manufacture can contain: -

i. Greater than 0.02 wt% Be.

ii. Greater than 0.02 wt% Li.

b. Aluminium based alloys must contain; ~~AlSi10Mg, AlSi7MG, Al-Cl-30AL, P339-AM, EOS Aluminium 2139 AM, Aheadd CP1.~~

i. Less than 3.0 wt% Zr.

ii. Less than 1.1 wt%Ag.

iii. Less than 1.8 wt% B.

iv. less than 0.4 wt% C

~~b. Aluminium Alloys with particulate reinforcing, A20X, 2024-RAM2, 6061-RAM2.~~

~~c. Aluminium-Magnesium Alloys; Scalmalloy, HRL 7A77.~~

c. Titanium based Alloys. ~~Grade 1, Grade 2, Ti6Al4V, Ti6AL4V ELI, Ti 5553, Ti 6242.~~

d. ~~Steel~~ Iron based Alloys. ~~316, 304, MS1, 15-5PH, 17-4PH.~~

e. Copper based Alloys. ~~not containing Beryllium (Be content of <0.02 wt%).~~

f. Nickel or Cobalt based Superalloys. ~~Inconel 625, Inconel 718, Cobalt-Chrome.~~

Furthermore, the finished mass of a component made by additive manufacture should be no less than 60% of the mass of the printed component, excluding support structures.

C15.2.3 Permitted Polymer Composite Materials

a. **Matrix Systems**: the matrix system utilised in all polymer composite materials must be based on one of the following:

i. Epoxy

ii. cyanate ester

iii. bismaleimide

iv. phenolic

v. polyurethane

vi. polyester

vii. Thermoset resins not derived from petrochemicals – subject to approval.

viii. Thermoplastic materials

b. **Reinforcing**: reinforcing is permitted using the following materials:

i. Carbon fibres manufactured from polyacrylonitrile (PAN) precursor, which have:

- A nominal tensile modulus ≤ 550GPa
- A nominal tensile strength ≤ 7100 MPa. ~~(i.e. up to and including that of Toray T1100 or Mitsubishi MR70)~~
- A density ≤ 1.92 g/cm3.

ii. Aramid fibres.

iii. Poly(p−phenylene benzobisoxazole) fibres (e.g. “Zylon”).

iv. Polyethylene fibres.

v. Polypropylene fibres.

vi. Glass fibres, limited to types; E, S, Q and BF. As defined in ISO 2078:2022.

vii. Organic Fibres limited to; flax, hemp, linen, cotton, bamboo.

c. Core Materials:

i. Aluminium Honeycomb

ii. Meta−Aramid Honeycomb (e.g. Nomex or equivalent)

iii. Para−Aramid Honeycomb (e.g. Kevlar)

iv. Polymer foams

v. Polymer syntactic foams

vi. Balsa wood

C15.2.4 Permitted Polymer Materials

In addition to materials permitted in C15.2.3, the following polymer materials are permitted:

a. Thermoplastics – monolithic or particulate filled.

b. Thermosets – monolithic or particulate filled.

C15.3 Specific Prohibitions and Restrictions (Components Outside the PU Perimeter)

Advisory Committee: TAC
Governance: F1 Commission / WMSC

C15.3.1 Notwithstanding the list of permitted materials in Article C15.2, the following materials or processes are forbidden:

a. Shape Memory Materials except for piezoelectric materials used in electrical sensors.

~~b. Additive manufactured materials containing Beryllium.~~

C15.3.2 Notwithstanding the list of permitted materials in Article C15.2, the following materials or processes are forbidden unless listed in Article C15.4:

a. Alloys where the combined weight of Platinum, Ruthenium, Iridium, Rhenium and Gold is more than 5%.

b. Components produced by foil metallurgy.

c. Intermetallic based alloys.

C15.3.3 Suspension uprights may only be made from:

a. wrought ~~UNS A92014, UNS A92618, UNS A97075 or EN/AA 7022~~ aluminium alloys conforming to C15.2.1b.

b. wrought or cast titanium alloys permitted by C15.2.1.f.

c. particulate reinforced aluminium alloy matrix composites permitted by C15.2.1.~~h~~ i.

d. additive manufactured titanium permitted by C15.2.2.~~d~~.

e. additive manufactured aluminium permitted by C15.2.2.~~a or C15.2.2.b.~~

C15.3.4 The Primary Roll Structure may not be made from materials with particulate reinforcing (Articles C15.2.1.i ~~or C15.2.2.b).~~

C15.3.5 The Plank must be made from a material that:

a. uses the same constituent materials, at the same relative fraction, throughout its construction, other than where local repairs have been conducted or where it has been pocketed (see C15.3.5c)

b. is a solid polymer composite with a specific gravity between 1.3 and 1.45.

c. if pocketed, the upper 0.5mm of the bonded assembly must have a specific gravity of between 1.3 and 1.65.

C15.3.6 Metallic Skid referred to in Article 3.6.3 must be manufactured from: -

a. Titanium alloy Ti6Al4V (according to AMS4928 or AMS4911) in annealed condition. No additional heat treatment is permitted; or

b. 17-4PH stainless steel (to AMS 5604 / ASTM A 693 or AMS 5643/ ASTM A 564). When the skid is new, its hardness must be no more than 38 HRC.

Furthermore, once supplied to the relevant specification stated above, they may only be machined from solid and no additional processes (such as forging, rolling, welding, or coating) may be carried out either before or after machining.

C15.3.7 All brake callipers must be made from aluminium materials permitted in Article C15.2.1.b.

C15.3.8 Wheel Rims must be made from magnesium based alloys where the primary alloying elements are aluminium and zinc, the AZ## range of alloys. ~~AZ70 or AZ80 magnesium alloy.~~ Surface treatments and coatings are only allowable to prevent corrosion, wear and for aesthetic appearance.

C15.4 Specific Exceptions (Components Outside the PU Perimeter)

Advisory Committee: TAC
Governance: F1 Commission / WMSC

The following materials, components or processes do not have to comply with articles C15.2 or C15.2 but may be subject to restrictions elsewhere in these regulations:

a. Monolithic Ceramic Materials may be used for; rolling elements of rolling–element bearings, High–Pressure Fuel Pumps elements, electrical components, Thermal Insulation, clutch friction materials and spherical bearings.

b. Ceramic Matrix Composites may be used for; friction materials, seals and Thermal Insulation.

c. Carbon–carbon composites may be used for friction materials.

d. Materials used in any electrical component (e.g. control boxes, wiring looms, sensors).

©2026 Fédération Internationale de l'Automobile

e. All seals and rubbers (e.g. rubber boots, o−rings, gaskets, any fluid seals, bump rubbers).

f. Fluids (e.g. water, oils).

g. Tyres.

h. Coatings and platings (e.g. DLC, chroming) whose primary purpose is not thermal or electrical insulation and provided the total coating thickness does not exceed 25% of the section thickness of the underlying base material in all axes. In all cases, the relevant coating must not exceed 0.8mm.

i. Paint.

j. Adhesives.

k. Thermal Insulation (e.g. felts, reflective foils or heat shields).

l. Any currently regulated materials (e.g. fuel bladder, headrest, extinguishant, padding or plank).

m. Materials used in any component that is supplied to an FIA Single Supply Contract.

n. Z−pinning is allowed in composite components.

~~o. Nano particles are permitted when part of a commercially available polymer or polymer resin.~~

~~o. UNS R30006 (Stellite 6 – Cast), UNS R30106 (Stellite 6 – Sintered), UNS R30016 (Stellite 6 – Wrought) and UNSR30012 (Stellite 12) may be used on or above Z−0 (i.e. not in RV−PLANK).~~

o. Materials used for windows in bodywork for optical sensors.

C15.5 Prescribed and Homologated Laminates (Components Outside the PU Perimeter)

Advisory Committee: TAC
Governance: F1 Commission / WMSC

The following are the prescribed laminates referred to in other articles of these regulations.

C15.5.1 The materials referred to in Article C15.5.2 are defined below:

a. CC100 – Woven carbon cloth, fibre weight between 50gsm and 150 gsm, epoxy prepreg

b. KC60 – Woven aramid cloth, fibre weight 60gsm, epoxy prepreg

c. KC170 – Woven aramid cloth, fibre weight 170gsm

d. R135 – 135gsm elastomeric material

e. R350 – 350gsm elastomeric material

f. ~~CC-UHS~~ CC-HS – Woven carbon cloth, fibre Ftu > ~~6250MPa~~ 5250MPa, epoxy prepreg

C15.5.2 The prescribed laminates in use throughout the Regulations are listed below:

a. PL−HALO: [KC60, CC100, KC60] stacking sequence is free.

b. PL−ANTI−SPLINTER may be one of the three specifications listed below:

i. Laminate Type A – a laminate where more than 50% by weight of the reinforcing is: aramid, poly(p−phenylene benzobisoxazole) (e.g. “Zylon”), polyethylene, polypropylene or natural fibres. In this case, no additional precautions are required.

ii. Laminate Type B – Laminates not covered by A and with areal weight of reinforcing up to 1000gsm: [B/2, R135, B/2] where B/2 is half the laminate ± 1 ply.

iii. Laminate Type C – Laminates not covered by A and with areal weight of reinforcing is greater than 1000gsm: [C/2, R350, C/2] where C/2 is half the laminate ± 1 ply.

c. PL−HEADREST: [KC60, KC60]

C15.5.3 The homologated laminates used in the Survival Cell are listed below. Representative panels must resist the specified load when it is applied through a rigid pad measuring 100mm x 130mm. Details of the test procedure are given in the document FIA-F1-DOC-002.

The panel must be constructed using the same manufacturing process as the survival cell. Sequential stages that would be carried out at the same pressure may be combined. Cure cycles must be the same temperature and duration as those used on the survival cell and must follow the recommendations of the resin manufacturer. Additional operations that would not be performed during the construction of the survival cell are not permitted.

Where a laminate is of sandwich construction;

i. The areal weight of reinforcing in the outer skin, must be as great as, or greater than that in the inner skin.

ii. The core must be aluminium honeycomb with a thickness of at least 6mm.

iii. Each skin must include plies of ~~CC-UHS~~ CC-HS with an areal weight of reinforcing of at least 800gsm.

iv. the test load must be applied to the outer skin.

a. HL−FWD−SC:

A laminate of sandwich construction. A representative test panel must resist an intrusion load ~~of~~ exceeding 325kN.

b. HL−COCKPIT−SIDE:

A representative test panel must resist an intrusion load ~~of~~ exceeding 440kN.

c. HL−COCKPIT−FLOOR:

A representative test panel must resist an intrusion load ~~of~~ exceeding 325kN.

d. HL−FC−SIDE:

A laminate of sandwich construction. A representative test panel must resist an intrusion load ~~of~~ exceeding 325kN.

C15.6 Materials, processes and construction – General (Components inside the PU Perimeter)

Advisory Committee: PUAC
Governance: PU Manufacturers' Governance Agreement / WMSC

C15.6.1 Unless explicitly permitted for a specific application, the following materials may not be used on the Power Unit:

©2026 Fédération Internationale de l'Automobile

a. Magnesium based alloys.

b. Metal Matrix Composites (MMC's) containing more than 2.0% volume/volume of other ceramic, metallic, carbon or intermetallic phase which is not soluble in the liquid phase at 100°C above the melting point of the metallic matrix.

c. Intermetallic materials.

d. Alloys containing more than 5% by weight of Platinum, Ruthenium, Iridium or Rhenium.

e. Copper based alloys containing more than 2.2% Beryllium.

f. Any other alloy class containing more than 0.25% Beryllium.

g. Tungsten base alloys.

h. Ceramics and ceramic matrix composites.

i. Aluminium based alloys containing more than 1.0 % weight Lithium (Li).

j. Materials which at least one element during production is a nanomaterial.

k. Thermal Insulation containing unbound nanomaterials.

l. Material with a density exceeding 18,400 kg/m^3.

m. Aluminium based alloys containing more than 1.0% weight Silver (Ag).

n. Polymer composite material not listed in C15.2.3 except Metallic reinforced polymer.

C15.6.2 For coatings, the restrictions in Article C15.6.1 do not apply to coatings provided the total coating thickness must not exceed 25% of the section thickness of the underlying base material in all axes.

In all cases, other than under Article C15.6.3(b), the relevant coating must not exceed 0.8mm.

Where the coating is based on Gold, Platinum, Ruthenium, Iridium or Rhenium, the coating thickness must not exceed 0.035mm.

Graphene is not permitted in any coating.

C15.6.3 The restrictions in Article C15.6.1(h) do not apply to the following applications:

a. Any component whose primary purpose is for electrical or Thermal Insulation.

b. Any coating whose primary purpose is for Thermal Insulation of the outside of the exhaust system.

C15.6.4 For Aluminium-based alloy, in addition to the restrictions in article C15.6.1(b), TiB2 is only permitted up to a maximum of 0.3% v/v. *Additionally AMS 4471A, AMS 4482 and AMS 7033 are authorized*.

C15.6.5 The creation of a textured surface using an energy beam (e.g., electron or laser beam) or photo-chemical etching may not be used on the Power Unit, except for part marking purposes.

C15.6.6 For all rubbers and seals the restrictions in Article C15.6.1 and C15.6.5 do not apply (e.g., rubber boots, O-rings, gaskets, any fluid seals, bump rubbers).

For piston rings (Article C5.4.10) and dynamic seals used in the air spring sub-assemblies listed in item 4 the restrictions in Article C15.6.1 and C15.6.5 apply.

C15.6.7 An approach aiming to respect the REACH and ROHS standards shall be actively pursued by the manufacturers.

C15.7 Materials and construction – Components (Components inside the PU Perimeter)

Advisory Committee: PUAC
Governance: PU Manufacturers' Governance Agreement / WMSC

C15.7.1 Pistons must be produced from one of the following iron-based alloys: AMS 6487, 15cdv6, 42CrMo4, X38CrMoV5-3.

C15.7.2 Piston pins must be manufactured from an iron-based alloy and must be machined from a single piece of material.

C15.7.3 Connecting rods must be manufactured from iron or titanium-based alloys and must be machined from a single piece of material with no welded or joined assemblies (other than a bolted big end cap or an interfered small end bush).

C15.7.4 Crankshafts must be manufactured from an iron-based alloy.

No welding is permitted between the front and rear main bearing journals.

Crank counterweights assembled to the crankshaft may be manufactured in a Tungsten based material.

C15.7.5 Camshafts must be manufactured from an iron-based alloy.

Each camshaft and lobes must be machined from a single piece of material.

No welding is allowed between the front and rear bearing journals.

C15.7.6 Valves must be manufactured from TiAl intermetallic materials or from alloys based on Iron, Nickel, Cobalt, Titanium. Hollow valves (e.g., sodium, or similar, filled for cooling) are permitted for the exhaust only, but the main cavity created must be a cylindrical feature of constant diameter. Machined features to facilitate manufacture and assembly are allowed above and below the main cavity, however such features must not create a volume that extends beyond a virtual plain cylinder positioned on the valve centreline with a diameter which is 1.0 mm greater than that of the main cavity.

In addition, the restrictions detailed in Articles C15.6.2 and C15.1.4 do not apply to the intake and exhaust valves.

C15.7.7 Reciprocating and rotating components:

a. Reciprocating and rotating components must not be manufactured from graphitic matrix, metal matrix composites or ceramic materials, this restriction does not apply to the clutch discs and any seals.

b. Rolling elements of rolling element bearings must be manufactured from an iron-based alloy or from a ceramic material.

c. All timing gears between the crankshaft and camshafts (including hubs) must be manufactured from an iron-based alloy.

©2026 Fédération Internationale de l'Automobile

d. High Pressure Fuel Pump elements may be manufactured from a ceramic material.

e. Torsional damper elements may be manufactured in a Tungsten based material.

C15.7.8 Static components:

a. Other than Inserts within them, engine crankcases including sump, Cylinder Heads, their respective covers and cylinder head cam covers must be manufactured from aluminium or iron-based alloys.

b. On the crankcase including sump, Cylinder Head and cylinder head cam cover, composite or metallic materials are permitted for local repairs to components following damage or failure and after consultation with all PU manufacturers. The total area should in any case not exceed 100cm2 and the thickness is limited to 3mm. Composite repairs must not be present on the components used during the following Championship season.

c. All threaded fasteners must be manufactured from Waspaloy, Rene 41, Inconel 718, A286, PH 13-08Mo, 35NiCrMo16, 30NiCrMo16, AISI H11, 17-4PH, UNS S32205/S31803, 42CrMo4 or any steel covered by the ISO 898-1 and ISO 898-2. Additional materials are authorized for the following four functions:

   i. Fasteners whose primary function requires them to be an electrical insulator may be manufactured from ceramic or polymeric materials.

   ii. Fasteners that are used in PU-CE may be manufactured from aluminium or copper-based alloys or polymeric (plastic) materials.

   iii. Fasteners used between the Cylinder Head and crankcase, crankcase upper and lower, conrod and crankshaft counterweight bolts may be manufactured from AMS5758, AMS5844, AMS5845 and AMS5937 materials.

   iv. Fasteners belonging to and used with Commercially Available Components may be manufactured in any steel, aluminium and copper base materials.

d. Valve seat Inserts, valve guides and any other bearing component may be manufactured from metallic infiltrated pre-forms with other phases which are not used for reinforcement.

e. ICE Ballast may be manufactured in a Tungsten based material.

f. Only one Cylinder Head is permitted for each bank and each Cylinder Head must be made from a single piece of material with the exception of Inserts defined in Article 5.1.7 and must include inlet ports, exhaust ports and all water cores and/or water passages above the top deck.

g. The plenum must be made from polymer composite material, ~~steel, aluminium or titanium alloys~~ with the exception of Inserts.

©2026 Fédération Internationale de l'Automobile

C15.8 Materials and construction – Pressure charging and exhaust systems (Components inside the PU Perimeter)

Advisory Committee: PUAC
Governance: PU Manufacturers' Governance Agreement / WMSC

C15.8.1 All components of the Engine Exhaust System, turbine, turbine housing and Wastegate exit housing that are in contact with the main exhaust gas flow must be manufactured from an Iron or Nickel based alloy.

C15.8.2 Static components that are not in contact with the exhaust gas flow nor the compressor gas flow (e.g., central Turbo Charger housing) must be manufactured from iron-based alloys, aluminium alloys or titanium alloys. Plain bearings and Minor Parts not covered by a specific regulation do not have to comply with this Article.

C15.8.3 The restrictions detailed in article C15.6.1 i) do not apply to the compressor housing (from variable geometry intake device(s) housing if present to Compressor Outlet(s)) which must be manufactured from aluminium-based alloy containing up to 2.5% weight Lithium.

C15.8.4 The restrictions detailed in article C15.6.1 i) do not apply to the compressor wheel, which must be manufactured from aluminium-based alloy containing up to 2.5% weight Lithium or from Titanium.

C15.8.5 Measures must be taken to ensure that in the event of failure of the turbine wheel any resulting significant debris is contained by and within the turbine housing, except in the case of an axial failure where this debris must be contained within the turbine housing and/or Exhaust Tailpipe assembly.

C15.8.6 Nickel Alloys limited to Inconel 625, 625 LCF and 718 on the exhaust primaries / secondaries / flange / brackets / turbine housing

C15.8.7 Additive manufacture is only permitted in three areas within the exhaust assemblies as defined in 5.1.20 (see drawing 8 in Appendix C3 is a representation of these constraints, included for reference only):

a. One stub/flange element per primary at the connection to the Cylinder Head. The maximum dimension of this additive element in any direction is 150mm.
b. One 3-into-1 element per bank joining the primaries to the secondary. The maximum dimension of this additive element in any direction is 230mm.
c. One connection between the secondary and the TC per bank. The maximum dimension of this additive element for transition to TC and Wastegate mounting in any direction is 150mm.

C15.8.8 exhaust insulation may not use ceramic matrix composite (CMC) or polymer composite material (PMC).

C15.8.9 Variable Geometry intake device(s) (Article C5.7.4) components necessary to modify the intake section must respect Article C15.6.

©2026 Fédération Internationale de l'Automobile

C15.9 Materials and construction –ERS and electronic systems (Components inside the PU Perimeter)

Advisory Committee: PUAC
Governance: PU Manufacturers' Governance Agreement / WMSC

C15.9.1 All metallic casings for the ERS must be manufactured in aluminium-based alloy and must comply with all aspects of Article C15.6 except for power electronic cooling base plate where metal matrix composite may be used.

C15.9.2 All casings for electronic systems, including break up boxes, with exception of the ERS must be manufactured from polymeric material or aluminium based alloys.

C15.9.3 Energy storage devices are not subject to Articles C15.6.1a), b), c) and h) nor to C15.6.2.

C15.9.4 Permanent magnets in electrical machines are not subject to Articles C15.6.1 a), b), c) or h) nor to Article C15.6.2.

C15.9.5 Soft electromagnetic materials used in electrical machines are not subject to Articles C15.6.1 a), b), c) or h) nor to Article C15.6.2. Cobalt concentration is limited to 10% on soft magnetic alloys. Concentration up to 49% is permitted providing that all end-of-life cobalt is recycled. In addition, any cobalt used must come from an ethical source.

C15.9.6 Electronic components contained inside electronic units are not subject to any material restriction.

C15.9.7 ES Cells materials are not subject to Article C15.6.1 j).

2027

ARTICLE C16: FUEL AND ENGINE OIL

Advisory Committee: PUAC

Governance: PU Manufacturers' Governance Agreement / WMSC

C16.1 Basic principles

C16.1.1 The purpose of this Article is to ensure that the fuel and engine oil used in Formula One correspond to what these terms are generally understood to mean.

C16.1.2 With regard to fuel, the detailed requirements of this Article are intended to ensure the use of Advanced Sustainable (AS) fuels comprising solely AS components, that are composed of certified compounds and refinery streams and fuel additives and to prohibit the use of specific power-boosting chemical compounds. Co-processing of these certified compounds or refinery streams is not permitted. All AS components and fuels must be segregated from non-sustainable components and fuels at all times. The final, blended fuel must achieve a greenhouse gas (GHG) emissions savings, relative to fossil-derived gasoline, of at least that defined for the transport sector in the EU Renewable Energy Directive RED[(1)], which was current on January 1st in the year prior to the relevant Formula One Championship. The GHG savings calculation takes into account any net carbon emissions from land-use change, the energy used in harvesting and transporting the biomass and the production and processing of the advanced sustainable component. In any process where sustainable energy is used, this must be surplus to the local domestic requirements. Where available, GHG emission savings will be taken from the current EU Renewable Energy Directive (RED) or other equivalent, internationally recognised sources. The use of these compounds and refinery streams in F1 fuel will be dependent on evidence indicating that the supplier is genuinely developing these compounds for use in commercial fuels and that they are available from plants capable of producing at least 5m3 per year or are commercially available at similar volumes from a third party.

[(1)] Article 29, Section 10(c) of Directive (EU) 2018/2001 for biofuels, and Article 25, Section 2 for RFNBO

C16.1.3 Only approved fuel (Article C16.4) may be released into the engine Combustion Chamber by the Fuel Injector.

C16.1.4 Only ambient air may be mixed with the fuel as an oxidant.

C16.1.5 The function of an engine oil is to lubricate moving parts, to improve efficiency by reducing friction and to reduce wear. It also cleans, inhibits corrosion, improves sealing, and cools by carrying heat away from parts. Engine oil should not enhance the properties of the fuel nor energize the combustion. The presence of any component that cannot be rationally associated with the defined functions of the engine oil will be deemed unacceptable.

C16.1.6 Any fuel or engine oil, which appears to have been formulated in order to subvert the purpose of this regulation, will be deemed to be outside it.

C16.1.7 All F1 Teams must be in possession of a Material Safety Data Sheet for each type of fuel or engine oil used. This sheet must be made out in accordance with EC Directive 93/112/EEC and all information contained therein strictly adhered to.

©2026 Fédération Internationale de l'Automobile

C16.1.8 The following components, irrespectively of their location inside the car, can only be lubricated with the oil as defined in article 16.1.5:

- ICE
- Turbo Charger
- MGU-K Mechanical Transmission
- MGU-K

Greases are not considered as part of this restriction.

C16.1.9 Only one oil specification, as defined in C16.1.5, is allowed inside the PU perimeter, with the following exceptions:

- Hydraulic fluid, only for the following devices under their normal and intended operation:
  - Actuators and relative control valves, as described in Appendix 3 Table 1 items 64 and 65
  - Hydraulic pump, if mechanically driven by the ICE, as described in Appendix 3 Table 1 item 63
  - Hydraulic lines associated with the above, as described in Appendix 3 Table 1 items 63 to 67.
- ERS fluid used for the normal and intended operation of the following PU Area as listed in the Appendix 3: ERS cooling, MGU-K, ES and PU-CE.

Greases are not considered as part of this restriction.

C16.1.10 Excluding fuel, hydraulic fluid, ERS fluid and engine oil as defined in C16.1.5, any other liquid inside the PU perimeter can only have the function of coolant/thermal exchange, and cannot act as a lubricant, with the only possible exception of lubricating its own pump(s) and valve(s).

C16.2 Fuel properties

The only fuel permitted is petrol having the following characteristics:

Property	Units	Min	Max	Test Method
RON		95.0(1)	102.0(1)	ISO 5164/ ASTM D2699
Sensitivity (RON-MON)			15.0(1)	ISO 5164/ ASTM D2699 ISO 5163/ ASTM D2700
LHV	MJ/kg	38.0	41.0	GC
Density (at 15°C)	kg/m^3	720.0	785.0	ISO 12185/ ASTM D4052
Methanol (2)	% v/v		3.0	EN 1601 or EN 13132 or EN ISO 22854
Oxygen	wt%	6.70	7.10	Elemental Analysis
Nitrogen	mg/kg		500	ASTM D 5762
Benzene	wt%		1	GCMS
DVPE	kPa	45	68	EN130161
Lead	mg/l		5	ASTM D 3237 or ICPOES

©2026 Fédération Internationale de l'Automobile

Manganese	mg/l		2	ASTM D 3831 or ICPOES
Metals (excluding alkali metals)	mg/l		5	ICPOES
Oxidation Stability	minutes	360		ASTM D 525
Sulphur	mg/kg		10	EN ISO 20846
Electrical conductivity	pS/m	200		ASTM D 2624
Distillation Characteristics:				
At E70°C	% v/v	20.0	52.0	ISO 3405/ ASTM D86
At E100°C	% v/v	40.0	80.0	ISO 3405/ ASTM D86
At E150°C	% v/v	75.0		ISO 3405/ ASTM D86
Final Boiling Point	°C		210	ISO 3405
Distillation Residue	%v/v		2	ISO 3405
A correction factor of 0.2 for MON and RON shall be subtracted for the calculation of the final result in accordance with EN 228: 2012 A stabilising agent must be added				

The fuel will be accepted or rejected according to ASTM D 3244 with a confidence limit of 95%.

C16.3 Composition of the fuel

C16.3.1 The composition of the petrol must comply with the specifications detailed below:

Component	Units	Min	Max	Test Method
Aromatics	wt%		40	GCMS
Olefins	wt%		17	GCMS
Total diolefins	wt%		0.5[1]	GCMS
Total styrene and alkyl derivatives	wt%		0.1	GCMS

[1] Maximum concentration of individual diolefins ≤0.15 wt%

In addition, the fuel must contain no substance which is capable of exothermic reaction in the absence of external oxygen.

C16.3.2 The total of individual hydrocarbon components present at concentrations of less than 5% m/m of the total fuel must be at least 30% m/m of the hydrocarbon component of the fuel.

C16.3.3 Acceptable compounds and compound classes are defined in Appendix C1 Part B (under Additive, Aromatics, Diolefins, Naphthenes, Olefins, Oxygenates and Paraffins) and C16.3.4. In addition, to cover the presence of low-level impurities, the sum of components lying outside Appendix C1 Part B and Article C16.3.4 definitions are limited to 1% max m/m of the total fuel.

C16.3.4 The only oxygenates permitted are paraffinic monoalcohols and paraffinic monoethers with a final boiling point below 210°C.

C16.3.5 An additive package from non-sustainable sources, comprising Additives (as defined in Appendix C1 Part B), and Denaturants (as defined in Appendix C1 Part B) from non-sustainable sources may be used, at a total combined concentration of no more than 1.0% m/m of the blended fuel. The presence of any non-sustainable component that cannot be rationally associated with the defined functions of the additive package or the denaturant will be deemed unacceptable.

C16.4 Fuel approval

C16.4.1 Before any fuel may be used in either the Formula One Championship, or for Pre-Season Public Collective Testing:

a. The supplier must comply with the requirements set in Appendix A7, Paragraph 2.1.

b. Two separate five litre samples, in suitable containers, must be submitted to the FIA-nominated laboratory for analysis to confirm compliance with articles C16.2 and C16.3, and approval.

c. Each AS fuel component and/or AS refinery stream must undergo a compliance process conducted by an independent sustainability management scheme company appointed by the FIA. This is to verify that it meets the FIA's advanced sustainable requirements including its origin. As part of this process, recognised voluntary certification schemes may be accepted to demonstrate proof of sustainability of these AS fuel component and/or AS refinery streams. The final blended fuel, made exclusively from these AS components, AS refinery streams, and the components defined in C16.3.5, must also undergo a similar segregated compliance process conducted by the same FIA-appointed sustainability management scheme company. This will validate the traceability of each AS component and AS refinery stream in the blended fuel, its calculated GHG reduction, and ensure intellectual property is protected. This process is described in detail in FIA-F1-DOC-004.

The sustainability management scheme company will guarantee consistent, uniform and stable decisions building on widely accepted sustainability principles. Upon successful completion of this compliance process, the FIA will issue the corresponding approval certificate.

In Exceptional Logistical Circumstances, and at the sole discretion of the FIA, an allowance may be approved in the GHG reduction calculation in respect of additional transport emissions relating to AS fuel components and/or AS refinery streams.

Such approval may be granted only where the Fuel Supplier has submitted a prior written request and supporting justification demonstrating, to the FIA's satisfaction, that an unforeseen event beyond the Fuel Supplier's reasonable control has caused a significant disruption to the relevant AS component and/or AS refinery stream supply chain, and that the use of an alternative mode of transport to that normally employed is demonstrably unavoidable.

Any such allowance shall be limited to the additional transport emissions directly attributable to the alternative mode of transport, shall apply only for the specific and time-limited period defined by the FIA, and shall not affect compliance with any other requirements of this Article.

The FIA will notify all PU Manufacturers upon granting any such allowance.

©2026 Fédération Internationale de l'Automobile

d. The fuel must be shown to be compatible with the fuel bladder and seal materials used by all F1 Teams or PU Manufacturers that will be using the fuel by passing the tests specified in the document FIA-F1-DOC-052.

C16.4.2 No fuel may be used in a Competition or for Pre-Season Public Collective Testing without the prior written approval of the FIA.
During Pre-Season Public Collective Testing, a fuel approved in accordance with Article C16.4.1 must be used for a minimum of one full testing day and a distance of not less than 300 km.

C16.4.3 Before any fuel may be used for TCC (including Pre-Season Public Collective Testing):

a. The supplier must comply with the requirements set in Appendix A7, Paragraph 2.1.
b. Two separate five litre samples, in suitable containers, must be submitted to the FIA-nominated laboratory for analysis to confirm compliance with articles C16.2 and C16.3, and approval.

C16.5 Fuel sampling and testing at a Competition

C16.5.1 All samples will be taken in accordance with the FIA Formula One fuel sampling procedure, a copy of which may be found in the document FIA-F1-DOC-051.

C16.5.2 Fuel density will also be checked and shall not be less than -0.15% nor greater than +0.25% of the figure noted during preapproval analysis.

C16.5.3 Fuel samples taken during a Competition will be checked for conformity by using a gas chromatographic technique, which will compare the sample taken with an approved fuel. Samples which differ from the approved fuel in a manner consistent with evaporative loss, will be considered to conform. However, the FIA retains the right to subject the fuel sample to further testing at an FIA approved laboratory.

C16.5.4 GC normalised peak areas of the sample will be compared with those obtained from the reference fuel. Variations in any given normalised peak area (relative to those of adjacent peaks of a similar size) which are greater than 12%, or an absolute amount greater than 0.10% for compounds present at concentrations below 0.8%, will be deemed not to comply.

If a peak is detected in a fuel sample that was absent in the corresponding reference fuel, and its peak area represents more than 0.10% of the summed peak areas of the fuel, the fuel will be deemed not to comply.

If the deviations observed (above) by GC indicate that they are due to mixing with another Formula One fuel, which has been approved by the FIA for use by the team, the fuel sample will be deemed to comply, provided that the adulterant fuel is present at no more than 10% in the sample. Any systematic abuse of mixed fuels will be deemed not to comply.

C16.6 Engine oil definitions

Engine oil (serving the purpose stated in Article C16.1.5) must comprise base oils and additives as defined below.

Base Oil General:

a. A base oil is a base stock or blend of base stocks.

©2026 Fédération Internationale de l'Automobile

b. A base stock is a lubricant component that is produced by a single manufacturer. Base stocks may be manufactured using a variety of different processes including but not limited to distillation, solvent refining, hydrogen processing, oligomerization, esterification, and rerefining.

All base stocks are divided into five general categories:

a. Group I base stocks contain less than 90 percent saturates and/or greater than 0.03 percent sulphur and have a viscosity index greater than or equal to 80 and less than 120 using the test methods specified in the table below.

b. Group II base stocks contain greater than or equal to 90 percent saturates and less than or equal to 0.03 percent sulphur and have a viscosity index greater than or equal to 80 and less than 120 using the test methods specified in the table below.

c. Group III base stocks contain greater than or equal to 90 percent saturates and less than or equal to 0.03 percent sulphur and have a viscosity index greater than or equal to 120 using the test methods specified in the table below.

d. Group IV base stocks are polyalphaolefins (PAO).

e. Group V base stocks include all other base stocks not included in Group I, II, III, or IV.

The Analytical Methods for Base Stock are defined below:

Property	Test Method
Saturates	ASTM D2007
Viscosity index	ASTM D2270
Sulfur (use one listed method)	ASTM D1552 ASTM D2622 ASTM D3120 ASTM D4294 ASTM D4927

Additives are defined as the chemical compounds added to the base oil in small concentrations in order to improve the performance characteristics of the engine oil.

C16.7 Engine oil properties

The engine oil must comply with the following characteristics:

Property	Units	Min	Max	Test Method
Kinematic Viscosity (100°C)	cSt	2.8		ASTM D445
HTHS Viscosity at 150°C and Shear Rate of 10^6 s^1	mPa.s	1.4		ASTM D4741
Initial Boiling Point	°C	210		ASTM D7500
Flashpoint	°C	93		ASTM D3828

The oil will be accepted or rejected according to ASTM D 3244 with a confidence limit of 95%.

C16.8 Composition of the engine oil

C16.8.1 In the event that the initial boiling point test (ASTM D7500) suggests the presence of compounds with a boiling point of less than 210°C the sample will be further analysed by GCMS. The total of any components with boiling points less than 210°C must not exceed 0.5% m/m.

C16.8.2 The engine oil must not contain any organometallic petrol additives or other octane boosting petrol additives.

C16.9 Engine oil approval

C16.9.1 Before any engine oil may be used in the Formula One Championship:

a. The supplier must comply with the requirements set in Appendix A7, Paragraph 2.1.

b. Two separate one litre samples, in suitable containers, must be submitted to the FIA-nominated laboratory for analysis to confirm compliance with articles C16.6, C16.7 and C16.8, and approval.

C16.9.2 No engine oil may be used in a Competition without the prior written approval of the FIA.

C16.9.3 In addition to the engine oils approved for use in a Competition, one type of dyno engine oil may be approved by the FIA.

C16.10 Sampling and testing at a Competition

C16.10.1 Each F1 Team must declare, prior to every Competition, which oil will be used in each of their engines during the Competition.

C16.10.2 For reference purposes, before any oil may be used at a Competition, a sample must be submitted to the FIA together with the oil reference number.

C16.10.3 Engine oil samples taken during a Competition will be checked for conformity by using a Fourier transform infrared (FTIR) technique, which will compare the sample taken with that submitted at the start of the Competition. Samples which differ from the reference engine oil in a manner consistent with fuel dilution, engine fluids contamination and oil ageing as a result of normal engine operation, will be considered to conform. Samples which differ from the reference engine oil in a manner consistent with the mixing with other engine oils, which have been approved by the FIA for use by the team at a Competition, will be deemed to comply, provided that the adulterant oils are in total present at no more than 10% in the sample. This tolerance will also be applicable for the mixing with the approved dyno engine oil but only for a new engine during the Competition at which it is first used. However, the FIA retains the right to subject the oil sample to further testing at an FIA approved laboratory.

C16.10.4 The car must be equipped with a means of taking a sample from the main oil system at any time. The sample point must be accessible without removing bodywork, except for an access hatch covering the sample point.

C16.11 Recycling of Engine Oil

C16.11.1 All used engine oils must be collected for recycling.

©2026 Fédération Internationale de l'Automobile

ARTICLE C17: COMPONENTS' CLASSIFICATION

Advisory Committee: TAC
Governance: F1 Commission / WMSC

C17.1 General Principles

C17.1.1 Classification:

a. Subject to Article C17.1.1 (d), all components used in Formula One cars and all equipment used to support an F1 Team's operations during a Championship shall be classified as a Listed Team Component (LTC), a Standard Supply Component (SSC), a Transferable Component (TRC), a Free Supply Component (FSC), a Defined Specification Component (DSC), an Open Source Component (OSC) or a Not Transferable Open Source Component (OSCNT), each as defined in Article C17.2−C17.6(inclusive).

b. Unless otherwise specified, such components/equipment will be classified as LTC.

c. All Aerodynamic Components described in Article C3 are LTC, unless specifically defined as SSC, or OSCNT.

d. Power Unit components shown as "INC" in the column "Supply Perimeter" of the table in Appendix C4 do not fall under any of the four categories set out in this Articles C17.

e. In cases of doubt, the FIA should be consulted and shall determine the classification of a particular component or piece of equipment, should that differ from the default classification mentioned in Article C17.1.1 (b) above.

C17.1.2 For the purposes of the remaining provisions of this Article C17, any reference to any F1 Team shall be a reference to the F1 Team together with the approved Technical Partner of such F1 Team. A*n approved* Technical Partner is not considered a separate party to its associated F1 Team*, rather the* F1 Team *and its approved* Technical Partner *will together be considered as a single entity, being the* F1 Team.

C17.1.3 For the purposes of the remaining provisions of this Article C17, any reference to a "component" may also refer to complete assemblies.

C17.1.4 No F1 Team may use movement of personnel (whether employee, consultant, contractor, secondee or any other type of permanent or temporary personnel) with another F1 Team, either directly or via an external entity, for the purpose of circumventing the requirements of this Article C17.

C17.1.5 From time to time the FIA may request that an F1 Team shares certain information in connection with this Article C17 with the FIA (a) so that the FIA may share with the other F1 Teams for safety reasons only, or (b) to assist the FIA in considering future amendments to the Regulations, subject in each case to receiving the appropriate undertaking of confidentiality from the FIA.

C17.1.6 Except as otherwise expressly permitted by these Regulations or by the FIA, no F1 Team may directly or indirectly disclose or transfer any Intellectual Property to another F1 Team that is reasonably likely to impact upon the performance of the receiving F1 Team, and no F1 Team may directly or indirectly obtain (by any means) the same from another F1 Team.

©2026 Fédération Internationale de l'Automobile

C17.1.7 Where an F1 Team is made responsible under these Regulations for raising any issues of safety, incompatibility and/or reliability of a component that it uses on its car, it shall not make any claim against any other party that is inconsistent with that responsibility.

C17.1.8 F1 Teams may make available to other F1 Teams test facilities and equipment such as (but not limited to) wind tunnels or dynamometers. The Intellectual Property involved in the operation of such shared facilities may be used by and/or disclosed to the sharing party but the results of any experimental or test work carried out on such facilities may only be used by the originator of the work. Where facilities are shared, robust processes must be put in place to ensure there is no transfer of Intellectual Property through common personnel and that all data can only be accessed by the originator of the work. Any such sharing of facilities must be declared to the FIA with a full description of the work that will be carried out, and also of the processes that will be put in place in order to avoid an exchange of information that could lead to the transfer of knowledge leading to the performance enhancement of an LTC (as required by Article C17.2.4), or a TRC (as required by Article ~~C17.4.8~~ C17.4.7) or an OSC (as required by Article C17.5.11).

C17.1.9 Work on LTC, TRC and FSC components carried out by third parties is only permitted in the cases below.

a. An F1 Team may Outsource the Engineering, or Manufacturing of LTC components; and

b. An F1 Team may Outsource the Concept Design, Engineering, or Manufacturing of TRC or FSC components;

to a third party, provided that;

c. the third party to whom the work is Outsourced is not another F1 Team or a Related Party to another F1 Team;

d. the F1 Team ensures that the third party to whom the work is Outsourced has robust processes in place to prevent any transfer of that F1 Team's Intellectual Property to another F1 Team, or to a Related Party to another F1 Team. When required, the F1 Team must make its best efforts to procure the FIA the right to examine these processes directly with the third party for the purposes of auditing or eventual investigations.

e. In the case of Concept Design or Engineering carried out on Key Components, the F1 Team must disclose to the FIA details of such third parties, and upon request, the processes implemented to prevent the transfer of Intellectual Property.

f. An F1 Team must not use a third party to carry out Engineering on their Survival Cell it that third party carries out Engineering or Manufacturing on the Survival cell of another F1 Team.

C17.1.10 A **"Technical Partner"**, with respect to an F1 Team in the Championship, is a party who is nominated by an F1 Team to undertake any kind of work, including work on LTC, TRC, or FSC components.

A Technical Partner;

a. Must be a Related Party of the F1 Team.

b. Can only be a Technical Partner to a single F1 Team and must be the sole Technical Partner to that F1 Team.

c. Must be declared on the entry form to the Championship and approved by the FIA.

The F1 Team is responsible for the compliance of its Technical Partner with the Regulations.

C17.2 Listed Team Components (LTC)

C17.2.1 "**Listed Team Components**" (LTC) are components whose design, ~~manufacture~~ Concept Design, Engineering, Manufacturing, and Intellectual Property must, subject to Article C17.2.5, be owned and/or controlled by a single F1 Team on an exclusive basis within Formula One (including, without limitation, the components identified as such in Appendix C6).

C17.2.2 Subject to Article C17.2.5, an F1 Team may only use LTCs in its Formula One cars for which the F1 Team has undertaken the Concept Design.

The F1 Team may Outsource the Engineering and/or Manufacturing of an LTC to a third party provided that:

a. the F1 Team retains the exclusive right to use the LTC in the Championship for so long as it competes in the Championship; and

b. all Outsourced work is carried out according to the requirements of C17.1.9.

C17.2.3 Although it is permissible to be influenced by the design or concept of an F1 Team's LTC using information that must potentially be available to all F1 Teams, this information may only be obtained at Competitions or TCCs (as defined respectively in Appendices A1 and B1), and no F1 Team may design its LTCs based on "reverse engineering" of another F1 Team's LTC. For the purpose of this Article, "reverse engineering" shall mean:

a. The use of photographs or images, combined with software that converts them to point clouds, curves, surfaces, or allows CAD geometry to be overlaid onto or extracted from the photograph or image

b. The use of stereophotogrammetry, 3D cameras or any 3D stereoscopic techniques

c. Any form of contact or non−contact surface scanning

d. Any technique that projects points or curves on a surface so as to facilitate the reverse−engineering process

In cases where isolated features of an F1 Team's LTC(s) may closely resemble the features of another F1 Team's LTC(s), it will be the role of the FIA to determine whether this resemblance is the result of reverse engineering or of legitimate independent work. The following further provisions apply:

e. All F1 Teams must provide to the FIA, upon request, any data or other information that is required to demonstrate compliance with this Article.

f. For all LTCs used during the Championship, the restrictions described in this Article apply to their entire design process, including actions carried out before the calendar year of the Championship.

g. The FIA may issue guidance from time to time to define more specifically the requirements and constraints of this Article.

©2026 Fédération Internationale de l'Automobile

C17.2.4 No F1 Team may, either directly or via a third party:

a. pass on any information in respect of its LTC (including but not limited to data, designs, drawings, or any other Intellectual Property) to another F1 Team or receive any information from another F1 Team in respect of that F1 Team's LTC; or

b. receive consultancy or any other kind of services from another F1 Team in relation to LTC, or supply any such services to another F1 Team; or

c. pass any methodology which can be used to enhance the performance of LTC (including but not limited to simulation software, analysis tools, etc.) to another F1 Team, or receive any such methodology from another F1 Team.

Notwithstanding the provisions of this Article, Supplying Power Unit Manufacturers or Supplying Teams of TRCs may carry out the assembly of the components they supply with adjacent LTC components of the Customer Team. In such cases, the Customer Team may provide the minimal assembly information of the LTCs they need to assemble to the Supplying F1 Team or Power Unit Manufacturer. The FIA must approve such a transaction by reference to these regulations and must be satisfied that it is not used as a means to circumvent the provisions of Article C17.2.

C17.2.5 An F1 Team must have exclusive ownership of (or the F1 Team must have the exclusive right to use in the Championship) any and all rights, information or data of any nature (including but not limited to all aspects of the ~~design, manufacturing, know-how,~~ Concept Design, Engineering, Manufacturing and Intellectual Property, operating procedures, properties and calibrations) in respect of the LTC in its Formula One cars. However, notwithstanding the foregoing:

a. the use of specialist Intellectual Property or technology belonging to third parties is permitted in respect of LTC, provided that this Intellectual Property or technology is commercially available to all F1 Teams. This proprietary intellectual property shall remain the property of the third party. The principal parameters and Concept Design of such components must in any case be determined by the F1 Team and not be available to other F1 Teams;

b. Similarly, it is permitted to use commercially available sub–components or sub–assemblies in respect of LTC, provided these are commercially available to all F1 Teams. This provision applies if these components or sub–assemblies are not specifically listed as LTC. The FIA may request F1 Teams to provide a list of such sub–components and their technical specification. The FIA may classify such sub–components or sub–assemblies as LTC if it deems that they are being contrived to circumvent the purpose of this Article C17.

C17.3 Standard Supply Components (SSC)

C17.3.1 "**Standard Supply Components**" (SSC) are components whose ~~design and manufacture~~ Concept Design, Engineering and Manufacturing will be carried out by a supplier appointed by the FIA, to be supplied on an identical technical and commercial basis to each F1 Team (including, without limitation, the components identified as such in Appendix C6).

©2026 Fédération Internationale de l'Automobile

C17.3.2 Should a selection process fail to lead to appointment of a supplier of a component classified as a SSC, or should the arrangement with such supplier be terminated for whatever reason, the FIA reserves the right to re−classify the SSC as an LTC, TRC, DSC or OSC and to introduce appropriate technical rules in the relevant Article of these Regulations in order to control the technical specification and cost of this component.

C17.3.3 Components supplied as SSC must not be modified, and they must be installed and operated exactly as specified by the supplier, except for minor changes explicitly permitted in the document FIA-F1-DOC-116. However, each F1 Team is responsible for communicating directly to the relevant SSC supplier, while keeping the FIA informed at all times, regarding any issues of compatibility, reliability or safety in respect of an SSC. This may include submitting proposals for modifications to the SSC that an F1 Team considers should be made to ensure the necessary levels of safety, compatibility and reliability while at all times having due regard to cost and performance implications. In consultation with the relevant SSC supplier, the FIA will consider in good faith all issues raised (and modifications proposed) during the consultation process, and shall determine in its sole discretion whether or not to take any action. In exceptional circumstances, where an F1 Team establishes that a SSC is critically incompatible, unreliable or unsafe, the FIA may, at its sole discretion, authorise such F1 Team to carry out modifications to the SSC in question or use an alternative component in order to resolve the compatibility, reliability or safety issue. Permission for such a modification or usage of an alternative component will be communicated to all F1 Teams, and will continue to be applied until the relevant supplier introduces a new specification that resolves the reliability, compatibility or safety concern. In accordance with the severity of the reliability, compatibility or safety concern, the FIA may authorise a phased introduction of the modified SSC. In such cases, after consultation with F1 Teams and with the Supplier, the FIA will define the period of the phase−in, and any measures that need to be taken to ensure that no performance advantage (e.g., mass) is obtained by using either the old or the new specification of the SSC.

C17.3.4 The use of an SSC is mandatory and the particular function of that SSC must not be by−passed, replaced, duplicated or complemented by another component. This provision also applies to any TCC. In exceptional circumstances, the FIA, at its sole discretion may authorise the use of alternative components.

C17.3.5 No F1 Team may, either directly or via a third party pass any information (including but not limited to data, know how, operating procedures, properties and calibrations) or methodology (including but not limited to simulation software, analysis tools, etc.) which can be used to enhance the performance of a SSC to another F1 Team, or receive any such methodology from another F1 Team.

C17.4 Transferable Components (TRC) and Free Supply Components (FSC)

C17.4.1 "**Transferable Components**" (TRC) and **"Free Supply Components"** (FSC) are components whose ~~design, manufacture~~ Concept Design, Engineering, Manufacturing, and Intellectual Property is owned and/or controlled by a single F1 Team within Formula One (the Supplying Team), or by a third party. ~~, but can~~

These components may be supplied to another F1 Team (the Customer Team) including, without limitation, the components identified as such in Appendix C6.

©2026 Fédération Internationale de l'Automobile

Free Supply Components (FSC) will follow identical technical regulation requirements to TRC, as outlined in this Article C17.4. However, their treatment under Section Section D [Financial] of the Regulations will be different. A PU Manufacturer may supply FSC Items 10G, 10H, 10J or 10L of Appendix C6. In such a case, the PU Manufacturer must supply the components in accordance with the regulations applied to a Supplying Team in Article C17.4.

C17.4.2 The provisions of this Article C17.4 regard the supply of such TRC or FSC components by a Supplying Team or a third party to a Customer Team. In the event a component classified as TRC or FSC does not get supplied to any Customer Team, the *F1 Team* that owns or controls the Concept Design, Engineering, Manufacturing, and Intellectual Property of the component must comply with the regulations applied to a Supplying Team in Article C17.4. ~~the rules governing such a component will be identical to the rules governing LTC's except that Article C17.4.5 will still apply in place of Article C17.2.2.~~ Furthermore, with regard to any component classed as TRC or FSC, any two teams who are not operating in a Supplying Team – Customer Team relationship with regard to the specific component must observe all the rules that govern LTCs.

~~**C17.4.3** The Supplying Team must own and/or control all rights, information and/or data of any nature (including all aspects of the design, manufacturing, know-how, operating procedures, properties and calibrations) in respect of TRC or FSC, but it may supply such TRC or FSC to other F1 Teams.~~

C17.4.3 The components supplied as TRC or FSC by a Supplying Team to a Customer Team must be components identical to those used by the Supplying Team in the same Championship or a previous one. Under no circumstances is it permitted for the Supplying Team to carry out the **Concept Design, Engineering**, or **Manufacturing** ~~design or manufacture~~ of bespoke TRCs or FSCs for the specific use by a Customer Team. The Customer Team may however elect to replace or modify sub components of a TRC or FSC, but in that case all the related additional work (Concept Design, Engineering, and Manufacturing ~~including, but not limited to Research and Development, simulations, design, manufacture etc.~~) must be carried out by the Customer Team or its agents. In exceptional circumstances, and with the prior approval of the FIA, the Supplying Team may provide assistance to the Customer Team for the resolution of reliability or safety issues regarding the TRC or FSC.

C17.4.4 The Supplying Team may Outsource the Concept-Design, Engineering and/or Manufacturing of any TRC or FSC to a third party provided that all Outsourced work is carried out to the requirements of C17.1.9.

C17.4.5 The Supplying Team must have exclusive ownership of and/or control over any and all rights, information or data of any nature (Concept Design, Engineering, Manufacturing, and Intellectual Property ~~including but not limited to all aspects of the design, manufacturing, know-how, operating procedures, properties and calibrations~~) in respect of the TRC or FSC in its Formula One cars. However, notwithstanding the foregoing:

a. the use of specialist Intellectual Property or technology belonging to a third party is permitted in respect of TRC or FSC, provided that this Intellectual Property or technology is commercially available to all F1 Teams. This proprietary intellectual property shall remain the property of the third party. The principal parameters of such components must in any case be determined by the F1 Team and not be available to other F1 Teams.

©2026 Fédération Internationale de l'Automobile

b. similarly, it is permitted to use commercially available sub–components or sub–assemblies in respect of TRC or FSC, provided these are commercially available to all F1 Teams. Commercially available sub–components or sub–assemblies will include custom variants of standard designs.

C17.4.6 A third party unrelated to any F1 Team may supply a TRC or FSC to an F1 Team, provided that it also offers to supply the TRC or FSC to any other F1 Teams on similar commercial terms.

C17.4.7 In respect of the conditions at Article C17.2.4, any information on TRC or FSC passed on or received by an F1 Team or any consultancy or any other kind of services involving an F1 Team in relation to TRC or FSC shall be strictly limited to the designs or drawings necessary for the integration of the TRC or FSC into the design of the car and/or the data of the TRC or FSC necessary for the correct operation of the TRC or FSC on the car. For the avoidance of doubt, the following passage of information is strictly prohibited:

a. Information specific to a particular circuit or Race (e.g. suspension setup information)

b. Software or methodology for the optimisation of the performance of a TRC or FSC (e.g. simulation software)

C17.4.8 In respect of the compliance by the Customer Team with Section D [Financial] of the Regulations, the Supplying Team is mandated to provide the Customer Team all financial information that may be necessary to allow the Customer Team to demonstrate compliance with all FIA Regulations in force.

C17.5 Open Source Components (OSC and OSCNT)

C17.5.1 Open Source Components (OSC) and Not Transferable Open Source Components (OSCNT) are components whose Design Specification and Intellectual Property is made available to all F1 Teams through the mechanisms defined in this Article C17.5 (including, without limitation, the components identified as such in Appendix C6).

C17.5.2 For all OSC and OSCNT in use by all F1 Teams, the Design Specification must reside on a designated server specified by the FIA, and be accessible by all F1 Teams. Details about the server, access credentials and file naming and format conventions may be found in the document FIA-F1-DOC-039.

C17.5.3 Any F1 Team who designs a new OSC or OSCNT, or modifies the Design Specification of a previous OSC or OSCNT, must upload the new Design Specification to the designated server as specified in the document FIA-F1-DOC-039.

C17.5.4 Any F1 Team who creates a new, or modifies an existing, Design Specification of an OSC or OSCNT or any OSC or OSCNT manufactured to a Design Specification grants an irrevocable, royalty–free, non–exclusive, worldwide licence to all other F1 Teams to use and modify any of its Intellectual Property subsisting in such OSCs or OSCNTs or Design Specifications to the extent contemplated by these Regulations.

C17.5.5 Any F1 Team wishing to access the server referred to in Article C17.5.3, or to exercise its rights under the licence described in Article C17.5.4, may only do so if it has agreed to be bound by the terms of the terms and conditions applicable to the FIA's designated server, by accepting the FIA Open Source Component Licence (“FOSCL”), as provided by the FIA from time to time.

©2026 Fédération Internationale de l’Automobile

C17.5.6 In the event the OSC or OSCNT or the Design Specification of any OSC or OSCNT contains proprietary information and/or Intellectual Property of a third party supplier, this must be made clear by the F1 Team when uploading the Design Specification of the OSC or OSCNT, and use of the uploaded Design Specification (and any OSC or OSCNT manufactured to that Design Specification) by any other F1 Team exercising its rights in accordance with these Regulations must be approved in writing by the third party supplier, with a copy of such approval to be available to the FIA on request. Should it become necessary to remove any sensitive information, then the uploaded Design Specification must:

a. Contain a clear reference to the supplier in question.

b. Contain sufficient information for another F1 Team to be able to order an identical component from the supplier.

c. Contain all the necessary information to permit another F1 Team to install the OSC or OSCNT in their own car.

C17.5.7 All F1 Teams are obliged to declare to the FIA the version of each OSC or OSCNT that gets used on their car. This information will be made available to all F1 Teams.

C17.5.8 The complete responsibility for the installation and operation of an OSC or OSCNT (including any matters related to its function, performance, reliability, compatibility or safety) resides with the F1 Team who uses this version of the OSC or OSCNT. Notwithstanding this provision, any F1 Team who encounters a functionality, reliability, compatibility or safety issue with a particular version of an OSC or OSCNT is obliged to provide such information to the FIA and all other F1 Teams via the designated server.

C17.5.9 OSCs may be provided from one F1 Team to another, provided that the specification supplied from the Supplying Team to the Customer Team is of the same specification utilized by the Supplying Team. In such cases, their supply should be governed by all the provisions detailed in Article C17.4 for TRCs, however none of these restrictions shall prevent an F1 Team from fulfilling their obligations with respect to OSC as required by Article C17.5.

C17.5.10 OSCNTs may not be provided to any F1 Team by another, either directly, or through a third party.

C17.5.11 For any year (N) where a component is designated as OSC or OSCNT for the first time, F1 Teams in the preceding year (N−1) must upload the design of the equivalent component in use during that preceding Championship (N−1), no later than 15 July of that year (N−1), regardless of the suitability of this component to the Regulations of the following year (N).

C17.5.12 No F1 Team may, either directly or via a third party pass any information (including but not limited to data, know how, operating procedures, properties and calibrations) or methodology (including but not limited to simulation software, analysis tools, etc.) which can be used to enhance the performance of an OSC or OSCNT to another F1 Team, or receive any such information or methodology from another F1 Team.

C17.6 Defined Specification Components (DSC)

Further information concerning implementation is given in the document FIA-F1-DOC-039.

C17.6.1 **"Defined Specification Components"** (DSC) are components produced to a technical specification defined by the FIA.

A DSC must be approved by the FIA, who will ensure compliance with the technical specification and with Article C17.6. Once approved, details of the component will be added to a Technical List contained in the document FIA-F1-DOC-039.

C17.6.2 The use of a DSC is mandatory and is limited to components on the relevant Technical List. The particular function of that DSC must not be by–passed, replaced, duplicated or complemented by another component. This provision also applies to any TCC. In exceptional circumstances, the FIA, at its sole discretion may authorise the use of alternative components.

C17.6.3 Any supplier of a DSC must treat all the F1 Teams that they supply on an equitable basis.

C17.6.4 The technical specification of a DSC (to its required level of detail) will be defined by the FIA and communicated to all F1 Teams via relevant documents in the Annexe to this Article. Changes to the specification will only be made under exceptional circumstances. Should a change become necessary, the details and timescale of the change will be decided after consultation with all interested parties.

C17.6.5 A supplier that would like to supply a DSC for year (N) must provide the FIA with a full dossier containing complete technical description and commercial terms for the DSC before the date given in the Technical Specification. The FIA will examine the dossier in consultation with the F1 Teams and decide, within 30 days of its receipt, whether to add the DSC component in question to the list of approved DSCs, which will be set out in the Annexe to this Article.

C17.6.6 The number of variants that an approved DSC supplier may supply will be defined in the technical specification of the DSC. Each variant of the DSC must be made available by the supplier to all F1 Teams on identical commercial terms. With the exception of changes to the technical specification and design of the DSC that are necessary for reliability or cost reasons, the period that the technical specification and design of the DSC must remain unchanged will be defined in the technical specification of the DSC. Any subsequent changes must follow the approval process and timescales described in Article C17.6.4. Changes to the technical specification or design that are necessary for reliability or cost reasons are subject to the prior approval of the FIA and must be communicated to all F1 Teams.

C17.6.7 An F1 Team must not, either directly or indirectly via a third party or otherwise pass to another F1 Team any information (including but not limited to data, know how, operating procedures, properties and calibrations) or methodology (including but not limited to simulation software, analysis tools, etc.) that could be used by another F1 Team to enhance the performance of a DSC, or receive any such information or methodology from another F1 Team.

C17.6.8 Should a selection process fail to approve sufficient suppliers to cover the requirements of all F1 Teams, the FIA reserves the right to re–classify the DSC as an LTC, TRC, OSCNT, or OSC and to introduce appropriate technical rules in the relevant Article of these Regulations in order to control the technical specification and cost of this component.

©2026 Fédération Internationale de l'Automobile

C17.7 List of LTC, SSC, TRC, OSC, OSCNT, and DSC

A complete list of the parts' classification, as well as a definition of the perimeter of each assembly can be found in Appendix C6.

Components which are part of an assembly will assume the classification status of that assembly unless otherwise specified.

2027

ARTICLE C18: POWER UNIT COMPONENTS' CLASSIFICATION

Advisory Committee: PUAC

Governance: PU Manufacturers' Governance Agreement / WMSC

C18.1 General Principles

C18.1.1 Classification:

a. All Power Unit components used in Formula One cars shall be classified as:

i. a Listed Power Unit Component (LPUC);

ii. a Standard Supply Power Unit Component (SSPUC);

iii. an Open-Source Power Unit Component (OSPUC); or

iv. a Defined Specification Power Unit Component (DSPUC),

each as defined in Articles C18.2-C18.5 (inclusive).

b. Unless otherwise specified, or determined by the FIA, such components/equipment will be classified as LPUC.

c. In cases of doubt, the FIA should be consulted and shall determine the classification of a particular PU component or piece of equipment, should that differ from the default classification mentioned in Article C18.1.1(b) above.

C18.1.2 For the purposes of the remaining provisions of this Article C18, any reference to any PU Manufacturer shall include any *Associate* of such PU Manufacturer; and (b) any external entity (i) working on behalf of a PU Manufacturer or (ii) working for its own purposes and subsequently providing the results of its work to a PU Manufacturer.

C18.1.3 For the purposes of the remaining provisions of this Article C18, any reference to a "component" may also refer to complete assemblies.

C18.1.4 A PU Manufacturer must not use movement of personnel (whether employee, consultant, contractor, secondee or any other type of permanent or temporary personnel) from or to another PU Manufacturer *(or an External PU Manufacturer)*, either directly or indirectly via an external entity, for the purpose of circumventing the requirements of this Article C18.

C18.1.5 From time to time the FIA may request that a PU Manufacturer shares certain information in connection with this Article C18 with the FIA, but only for the following purposes: (a) so that the FIA may share such information with the other PU Manufacturers for safety reasons only, or (b) to assist the FIA in considering future amendments to the Regulations, subject in each case to the relevant PU Manufacturer receiving an appropriate undertaking of confidentiality from the FIA.

C18.1.6 Except as otherwise expressly permitted by these Regulations or by the FIA, a PU Manufacturer must not

a. directly or indirectly disclose or transfer (by any means) any Intellectual Property to another PU Manufacturer,

or

b. directly or indirectly obtain (by any means) any Intellectual Property from another PU Manufacturer.

©2026 Fédération Internationale de l'Automobile

C18.1.7 The following will constitute a breach of this Article C18:

a. the knowledge sharing, Intellectual Property transfer/receipt, merger or joining forces of:

i. two (or more) PU Manufacturers,

or

ii. one or more PU Manufacturers and one or more External PU Manufacturers,

or

b. the acquisition by one PU Manufacturer of part or whole of the company of another PU Manufacturer (or an External PU Manufacturer),

or

c. two PU Manufacturers entering into a services or other arrangement to support the other in delivering all or part of its supply.

In the event that a PU Manufacturer is unable to continue its participation in Formula 1 for any reason, the Intellectual Property, components or business of that External PU Manufacturer must not be acquired in part or in whole by a PU Manufacturer including by way of the External PU Manufacturer entering into an agreement to provide manufacturing or other support to the PU Manufacturer.

The FIA may, at its sole discretion, take any measures it considers appropriate in order to ensure that no PU Manufacturer obtains an unfair advantage from such an eventuality.

C18.1.8 Where a PU Manufacturer is made responsible under these Regulations for raising or reporting any issues of safety, incompatibility and/or reliability of a component that it uses on its Power Units, it shall not make any claim against any other party that is inconsistent with that responsibility.

C18.1.9 PU Manufacturers must not share any test facilities or equipment with another PU Manufacturer unless such facilities or equipment are commercially available to all PU Manufacturers. If PU Manufacturers are using commercially available facilities or equipment they must put in place relevant processes to ensure there is no transfer of Intellectual Property or knowledge through common personnel (or otherwise) leading to the performance enhancement of an LPUC (contrary to Article C18.2.3), or an OSPUC (contrary to Article C18.4.11), or a DSPUC (contrary to Article C18.5.6).

All PU Manufacturer' Intellectual Property (including any data) available through shared facilities or equipment shall only be available to the PU Manufacturer requesting such access to the test facilities or equipment and shall fully and exclusively remain its property.

C18.1.10 This Article C18 and these Regulations shall not restrict the normal business as usual including but not limited to mergers or acquisitions by *Associates* of PU Manufacturers, or investments, that are not relevant to Formula 1.

©2026 Fédération Internationale de l'Automobile

C18.2 Listed Power Unit Components (LPUC)

C18.2.1 "**Listed Power Unit Components**" ("**LPUC**") are PU components whose design, manufacture and Intellectual Property is owned and/or controlled by a single PU Manufacturer or its agents on an exclusive basis (including, without limitation, the PU components identified as such in Appendix C4).

C18.2.2 A PU Manufacturer must only use LPUC in its PUs that it has designed (including, for the avoidance of doubt, its three-dimensional shape and the evolution history leading to it, any preliminary designs, simulations, dynamometer tests, and analysis) and manufactured itself. However, this does not prevent the PU Manufacturer Outsourcing any R&D, engineering and/or CAD design and/or the manufacture of any LPUC to a third party (including, for the avoidance of doubt, an Associate of such PU Manufacturer) provided that:

a. the PU Manufacturer retains the exclusive right to use the LPUC in Formula One for so long as it participates in Formula One;

b. the third party to whom design and/or manufacture of the LPUC is Outsourced must not be another PU Manufacturer or an Associate of another PU Manufacturer; and

c. In the case the third party to whom design and/or manufacture of the LPUC is Outsourced is not another PU Manufacturer or an Associate the provisions of Article C18.2.5 apply.

C18.2.3 A PU Manufacturer must not, either directly or indirectly via a third party or otherwise:

a. pass on any information in respect of its LPUC (including but not limited to data, designs, drawings, or any other Intellectual Property) to another PU Manufacturer or receive any information from another PU Manufacturer in respect of that PU Manufacturer's LPUC; or

b. receive consultancy or any other kind of services from another PU Manufacturer in relation to LPUC, or supply any such services to another PU Manufacturer; or

c. pass on any methodology that could be used by another PU Manufacturer to enhance the performance of LPUC (including but not limited to simulation software, analysis tools, etc.) to another PU Manufacturer, or receive any such methodology from another PU Manufacturer.

C18.2.4 In determining whether and to what extent a PU Manufacturer is to be held liable for a breach of Article C18.2.3 that has occurred via a third party, the FIA may take into account amongst other things the extent to which the PU Manufacturer: (i) took steps to prevent the breach in question; and (ii) took steps to remedy and negate the consequences of the breach immediately upon becoming aware of the breach.

C18.2.5 A PU Manufacturer (or its agents) must have exclusive ownership of (or the PU Manufacturer must have the exclusive right to use in the Championship) any and all rights, information or data of any nature (including but not limited to all aspects of the design, manufacturing, know-how, operating procedures, properties and calibrations) in respect of the LPUC in its PUs. However, notwithstanding the foregoing:

a. The use of specialist Intellectual Property or technology of third parties is permitted in respect of LPUC, provided that this Intellectual Property or technology is commercially available to all PU Manufacturers. The detailed specifications of such LPUC must in any case be determined by the PU Manufacturer and must not be available to other PU Manufacturers;

©2026 Fédération Internationale de l'Automobile

b. Similarly, the use of commercially available sub-components or sub-assemblies in respect of LPUC is permitted, provided such sub-components or sub-assemblies are commercially available to all PU Manufacturers and are not specifically listed as LPUC. The FIA may request PU Manufacturers to provide a list of such sub-components and/or sub-assemblies and their technical specification. The FIA may classify such sub-components or sub-assemblies as LPUC if it deems, in its sole discretion, that they are being contrived to circumvent the purpose of this Article C18.

c. Similarly, the use of services from a third-party supplier which assist the PU Manufacturer in the design or development of its LPUCs is permitted, provided such services are commercially available to all PU Manufacturers on similar commercial terms. When two or more PU Manufacturers use the services from a given third-party supplier, full details must be made available to the FIA to demonstrate that such activity does not constitute a means to transfer, directly or indirectly, information from one PU Manufacturer to another. The services covered by this Article include but are not limited to: the use of test facilities, and the use of software.

C18.3 Standard Supply Power Unit Components (SSPUC)

C18.3.1 "**Standard Supply Power Unit Components**" ("**SSPUC**") are PU components whose design and manufacture will be carried out by a supplier appointed by the FIA, to be supplied on an identical technical and commercial basis to each PU Manufacturer (including, without limitation, the PU components identified as such in Appendix C4).

C18.3.2 In certain cases, determined by the FIA in its sole discretion, more than one configuration of an SSPUC may be made available by the appointed supplier, in order to address installation differences between different PUs. In such a case, the FIA will require that any differences between the available configurations are kept to a minimum by the supplier.

C18.3.3 Should the FIA's selection process fail to lead to the appointment of a supplier of a PU component classified as an SSPUC, or should the arrangement with such supplier be terminated for whatever reason, the FIA reserves the right to re-classify the SSPUC as an LPUC, OSPUC or DSPUC and to introduce appropriate technical rules in the relevant Article of these Regulations in order to control the technical specification and cost of this such PU component.

C18.3.4 PU components supplied as SSPUC must not be modified, and they must be installed and operated exactly as specified by the supplier, except for minor changes explicitly permitted in the relevant FIA-F1-DOC document for each associated component. However, each PU Manufacturer is responsible for directly and promptly informing both the FIA and the relevant SSPUC supplier, of any issues of compatibility, reliability or safety in respect of a SSPUC. This may include submitting proposals for modifications to the SSPUC that a PU Manufacturer considers should be made to ensure the necessary levels of safety, compatibility and reliability while at all times having due regard to cost and performance implications. In consultation with the relevant SSPUC supplier, the FIA will consider in good faith all issues raised (and modifications proposed) during the consultation process and shall determine in its sole discretion whether or not to take any action. In exceptional circumstances, where a PU Manufacturer establishes that a SSPUC is critically incompatible, unreliable or unsafe, the FIA may, at its sole discretion, authorise such PU Manufacturer to carry out modifications to the SSPUC in question or use an alternative PU component in order to resolve the compatibility, reliability or safety issue. Permission for such a modification or usage of an alternative PU component will be communicated by the FIA to all PU Manufacturers, and will continue to apply until the relevant supplier introduces a new specification that resolves the reliability, compatibility or safety issue.

C18.3.5 The use of an SSPUC is mandatory and the particular function of that SSPUC must not be by-passed, replaced, duplicated or complemented by another PU component. This provision also applies to any TCC. In exceptional circumstances, the FIA may, at its sole discretion may authorise the use of alternative PU components.

C18.3.6 A PU Manufacturer must not, either directly or indirectly via a third party or otherwise pass to another PU Manufacturer, any information (including but not limited to data, know how, operating procedures, properties and calibrations) or methodology (including but not limited to simulation software, analysis tools, etc.) that could which can be used by another PU Manufacturer to enhance the performance of a SSPUC to another PU Manufacturer, or receive any such information or methodology from another PU Manufacturer.

C18.4 Open-Source Power Unit Components (OSPUC)

C18.4.1 **"Open-Source Power Unit Components" ("OSPUC"**) are PU components whose Design Specification and Intellectual Property is made available to all PU Manufacturers through the mechanisms defined in this Article C18.4 (including, without limitation, the PU components identified as such in Appendix C4).

C18.4.2 For all OSPUC in use by all PU Manufacturers, the Design Specification must reside on a designated server specified by the FIA and be accessible by all PU Manufacturers. Details of the server, access credentials and file naming and format conventions may be found in the document FIA-F1-DOC-039.

C18.4.3 Any PU Manufacturer who designs a new OSPUC or modifies the Design Specification of a previous OSPUC must upload the new Design Specification to the designated server as specified in the document FIA-F1-DOC-039.

©2026 Fédération Internationale de l'Automobile

C18.4.4 Any PU Manufacturer who creates a new, or modifies an existing, Design Specification of an OSPUC or who manufactures any OSPUC manufactured to a Design Specification must grant an irrevocable, royalty-free, non-exclusive, worldwide licence to all other PU Manufacturers to use and modify any of its Intellectual Property subsisting in such OSPUC s or Design Specifications to the extent contemplated by these Regulations.

C18.4.5 Any PU Manufacturer wishing to access the designated server referred to in Article C18.4.3, or to exercise its rights under the licence described in Article C18.4.4, may only do so if it has agreed to be bound by the terms of the terms and conditions applicable to the FIA's designated server, by accepting the FIA Open-Source Power Unit Component Licence ("FOSPUCL"), as provided by the FIA from time to time.

C18.4.6 In the event the OSPUC or the Design Specification of any OSPUC contains proprietary information and/or Intellectual Property of a third-party supplier, this must be made clear by the PU Manufacturer when uploading the Design Specification of the OSPUC to the designated server. Use of the uploaded Design Specification (and any OSPUC manufactured to that Design Specification) by any other PU Manufacturer exercising its rights in accordance with these Regulations must be approved in writing by the third-party supplier, with a copy of such approval to be made available by the PU Manufacturer to the FIA on request. Should it become necessary for a PU Manufacturer to remove any confidential or commercially sensitive information from the Design Specification prior to its upload on the designated server, then the uploaded Design Specification must nevertheless contain:

a. Contain a clear reference to the third-party supplier in question.

b. Contain sufficient information to enable another PU Manufacturer to order an identical OSPUC from the third-party supplier.

c. Contain all the necessary information to permit another PU Manufacturer to install the OSPUC in its own PU.

C18.4.7 All PU Manufacturers are obliged to declare to the FIA the version of each OSPUC that gets used in their PU. This information will be made available by the FIA to all PU Manufacturers.

C18.4.8 The complete responsibility for the installation and operation of an OSPUC (including any matters related to its function, performance, reliability, compatibility or safety) resides with the PU Manufacturer who uses this version of the OSPUC. Notwithstanding this provision, any PU Manufacturer who encounters a functionality, reliability, compatibility or safety issue with a particular version of an OSPUC must promptly disclose that issue to the FIA and all other PU Manufacturers via the designated server.

C18.4.9 For any year (N) where a PU component is designated as OSPUC for the first time, PU Manufacturers in the preceding year (N-1) must upload to the designated server the design of the equivalent PU component in use during that preceding Championship (N-1), no later than 15 July of that year (N-1), regardless of the suitability of that PU component to the Regulations of the following year (N).

C18.4.10 PU Manufacturers supplying Power Units for the 2022 Championship must upload to the designated server the design of the equivalent OSPUC component in use during that Championship, no later than 31 December 2022, regardless of the suitability of that PU component to the 2026 Regulations.

©2026 Fédération Internationale de l'Automobile

C18.4.11 A PU Manufacturer must not, either directly or indirectly via a third party or otherwise pass to another PU Manufacturer any information (including but not limited to data, know how, operating procedures, properties and calibrations) or methodology (including but not limited to simulation software, analysis tools, etc.) that could be used to by another PU Manufacturer enhance the performance of an OSPUC, or receive any such information or methodology from another PU Manufacturer.

C18.5 Defined Specification Power Unit Components (DSPUC)

C18.5.1 **"Defined Specification Power Unit Components"** ("**DSPUC**") are PU components whose overall technical specification is defined by the FIA, which can be either (a) manufactured by the PU Manufacturer; or (b) supplied to the PU Manufacturer by one or more third party suppliers, who own and control the design, manufacture, and Intellectual Property of the PU components they supply (including, without limitation, the PU components identified as such in Appendix C4).

C18.5.2 A PU Manufacturer may be the supplier of a DSPUC, provided there is compliance by that PU Manufacturer with all of the provisions of this Article C18.5 are respected and the DSPUC in question is made available to all other PU Manufacturers on an equitable basis.

C18.5.3 The technical specification of a DSPUC (to its required level of detail) is defined by the FIA and communicated to all PU Manufacturers in the documents FIA-F1-DOC-005 and FIA-F1-DOC-006. Changes to the specification for year (N) will be defined by the FIA before 1 January of year (N-2) and will require the consent of at least 50% of the PU Manufacturers registered to compete in year (N). Changes to the specification after that date and before 1 January of year (N-1) will need the consent of at least 75% of the PU Manufacturers registered to compete in year (N).

C18.5.4 An approved DSPUC supplier may make only one technical specification and design of a DSPUC. Such technical specification and design must be made available by the supplier to all PU Manufacturers on identical commercial terms. With the exception of changes to the technical specification and design of the DSPUC that are necessary for reliability or cost reasons, the technical specification and design of the DSPUC must remain unchanged for at least two complete calendar years. Any subsequent changes must follow the approval process and timescales described in Article C18.5.3. Changes to the technical specification or design that are necessary for reliability or cost reasons are subject to the prior approval of the FIA and must be communicated to all PU Manufacturers.

C18.5.5 A third-party supplier that would like to supply a DSPUC for year (N) must provide the FIA with a full dossier containing complete technical description and commercial terms for the DSPUC before 1 January of year (N-1). The commercial terms must include any formulas for the adjustment of the supply price as a function of quantity ordered by a PU Manufacturer, or external parameters, such as inflation, material cost, etc. The supplier of the DSPUC may decide to lower the supply price at any time. The FIA will examine the dossier in consultation with the PU Manufacturers and decide, within 30 days of its receipt, whether to add the DSPUC component in question to the list of approved DSPUCs, which is set out in the documents FIA-F1-DOC-005 and FIA-F1-DOC-006.

©2026 Fédération Internationale de l'Automobile

C18.5.6 A PU Manufacturer must not, either directly or indirectly via a third party or otherwise pass to another PU Manufacturer any information (including but not limited to data, know how, operating procedures, properties and calibrations) or methodology (including but not limited to simulation software, analysis tools, etc.) that could be used by another PU Manufacturer to enhance the performance of a DSPUC, or receive any such information or methodology from another PU Manufacturer.

C18.6 List of LPUC, SSPUC, OSPUC and DSPUC

A complete list of the PU components' classification, as well as a definition of the perimeter of each assembly can be found in Appendix C4.

PU components that are part of an assembly will assume the classification status of that assembly unless otherwise specified.

2027

APPENDIX C1: DEFINITIONS

The definitions of this Appendix apply to all the Sections of the Regulations, unless specifically stated otherwise. Additional definitions provided either in Appendix 1 of each Section, or, for context, in the main text of the Regulations, also apply to all the Sections of the Regulations.

PART A: DEFINITIONS UNDER F1 COMMISSION GOVERNANCE

Advisory Committee: TAC
Governance: F1 Commission / WMSC

"Acute Circular Cone": is an oblique cone with a circular base in which the vertex, when projected perpendicularly onto the plane of the base, falls strictly within the circle's boundary.

"Aerodynamic Seal": a seal which reduces the air flow rate between two regions of differing pressures to the minimum feasible magnitude.

"Aerodynamic Surfaces": are Bodywork surfaces which remain in contact with the External Air Stream after all Trim and Combination operations have been performed, after all Fillets and Edge Radii have been applied, after the addition of all Bodywork defined in C3.13, and after all Final Assembly described in Articles C3.12 and C3.15, but before the application of Apertures in Article C3.16.

"**Car Coordinate System**": As defined in Article C2.1.1.

"Car Mass": is the mass of the car, including tyres, plus Mass of the Driver and Driver Ballast (defined in Article C4.3.2), but without fuel.

"Clutch": The mechanical device that can connect or disconnect the ICE output shaft with the transmission input shaft, or transmit torque between these two shafts.

"Cockpit": The volume that accommodates the driver.

"Cockpit Padding": Non−structural parts placed within the Cockpit for the sole purpose of improving driver comfort and safety. All such material must be quickly removable.

Competition As defined in Appendix A1.

"Complete Wheel": the assembly of Wheel Rim, inflated tyre, wheel fastener, and the items permitted by Article C10.7.6. The Complete Wheel is considered part of the suspension.

"Concave Curvature", "Convex Curvature": When references are made to the curvature of Aerodynamic Surfaces, without specifying a plane of intersection, the local curvature at any point is defined as the curvature of the intersection of the surface with a plane passing through a line normal to the surface at that point. Both convex and concave radius of curvature are defined as the minimum radius, in each respective direction, that is obtained when the intersecting plane rotates 180 degrees around the normal line.

"**Concept Design"** means all activities necessary to establish form, function, and integration boundaries of a component or assembly. ~~These may include;~~ It Includes: the definition of geometry; the ~~determination~~ definition of load cases, duty cycles, and performance requirements; wind tunnel testing and CFD analysis; the preparation of preliminary models, sketches or schemes. ~~The definition of load cases for analysis.~~

©2026 Fédération Internationale de l'Automobile

It excludes activities defined as **Engineering** or **Manufacturing**. ~~structural analysis, ply definition, production of manufacturing drawings, or any activity solely required for the manufacture of the component.~~

"Control Sensor", "Control Actuator", "Control Loom", "Control Unit": A sensor, actuator, wiring loom or unit will be referred to as "Control" if it is used by any on–board strategy other than input handling, input failure detection or functions used for logging only.

It includes for example units, sensors, actuators, wiring looms used in control loops, protections or driver information.

"Curvature Continuity": Curvature Continuity between two curves, at a given point of a curve, between two surfaces or within a surface is satisfied if the value of the curvature is continuous and in the same direction.

"Driveline Components": The rotating components involved in transmitting torque between the Gearbox input shaft and the drive shafts". This includes gears, shafts, dog rings, differential and rotating parts of the differential control mechanism. Bearings between these components and the Gearbox Case are included in this definition.

Edge Radius As defined in Article C3.2.7.

"Electronic Control Unit": (**"ECU"**) A programmable embedded system that controls one or more car sub–systems.

"Electronically Controlled": Any command system or process that utilises semi–conductor or thermionic technology.

"Engineering" means the means the activity of converting a Concept Design into a final design for manufacture. It includes; The preparation of detailed models and drawings, including minimal adjustments to geometry as maybe necessary for manufacture. Material specification. Analysis - stress, thermal, and fatigue. The definition of laminates. Rig testing. Homologation programmes.

"External Air Stream": the flow of air around the car that has a primary impact on its aerodynamic performance.

"FIA Accident Data Recorder": (**"FIA ADR"**) An ECU manufactured by an FIA designated supplier to a specification determined by the FIA.

The primary purpose of the FIA ADR is to monitor, record or control the following:

a. Data relevant to an accident or incident.

b. The management of marshalling and safety systems.

"FIA Standard ECU": An ECU or set of ECUs and their sub–components manufactured by an FIA designated supplier to a specification determined by the FIA.

The FIA Standard ECU comprises at least a master control unit and modules used for driver information and driver input device interfacing.

Fillet Radius As defined in Article C3.2.6.

"Formula One Car": An automobile (the car) designed solely for speed races on circuits or closed courses that is propelled by its own means, moving by constantly taking real support on the ground,

©2026 Fédération Internationale de l'Automobile

of which the propulsion and steering are under the direct control of a driver aboard the vehicle. It runs on four non–aligned Complete Wheels, with wheel centres that are arranged symmetrically about the plane Y=0, when in the straight–ahead position, to form the front and rear axles.

"Frame of Reference": a coordinate system, geometry, component, or group of components to which stated Bodywork must remain immobile.

"Gearbox": All the parts in the Power Train which transfer torque from the output shaft of the Power Unit, as described in Article C5.4.5, to the drive shafts (the drive shafts being defined as those components which transfer drive torque from the Sprung Mass to the Unsprung Mass). It includes all components whose primary purpose is for the transmission of power or mechanical selection of gears, bearings associated with these components (further defined under Driveline Components, Gear–Change Components, and Gearbox Auxiliary Components) and the casing in which they are housed (further defined under Gearbox Case).

"Gearbox Auxiliary Components": Components that are not included in Driveline Components or Gear–Change Components but interact directly with these components and are essential for the functioning of the Gearbox. This includes oil pressure and scavenge pumps, reverse–gear idler and its actuator, differential actuator, electronic sensors and actuators.

"Gearbox Case": The structure that encloses the Driveline Components and Gear–Change Components, mounts the rear impact structure, takes all rear suspension loads applied to the sprung mass and aerodynamic loads from the rear wing and transfers them to the Power Unit through the studs defined in Article C5.4.17.

"Gear–Change Components": Mechanical components that are involved in selecting the forward gears; barrel(s) and associated bearings, selector forks, selector rail, detent mechanisms and hydraulic actuator(s).

"Gurney": a component that, where permitted, may be attached to the trailing edge of a profile to adjust its aerodynamic performance. In any plane perpendicular to the trailing edge, a Gurney must comprise of a flat section, up to 1mm thick, of a height specified in the relevant regulation, and include a bonding flange on the wing's surface. This flange may extend no more than 20mm in length and 1mm in thickness. No part of the Gurney shall extend beyond a line perpendicular to the surface at the profile's trailing edge.

"Header Plate": The face of the header–tank adjacent to the Heat Exchanger Core, through which the Heat Exchanger Tubes pass and to which they are sealed.

"Heat Exchanger": A device for transferring heat between two or more fluids.

"**Heat Exchanger Core"** any part of the heat exchanger where one of the fluids is divided into multiple channels, and in which the primary function of the Heat Exchanger is achieved. If two or more such components lie on the same side of the car and outboard of Y=200 or two or more such components are centred around the Y=0 plane, and have an inlet liquid from the same source, or an outlet liquid that goes to the same destination, these will be considered to be part of the same core. Such components which share neither an inlet liquid from the same source, nor an outlet liquid that goes to the same destination are considered to form separate cores, even if the individual components are integrated to each other for construction purposes.

©2026 Fédération Internationale de l'Automobile

"Heat Exchanger Fins": devices between the Heat Exchanger Tubes or within the Heat Exchanger Tubes whose function it is to increase the level of heat exchange by convection and/or an increase of contact area.

"Heat Exchanger Tubes": the enclosed channels within the core in which one of the fluids flows.

"Key Component" means is an LTC, TRC or FSC component or group of components that contains significant IP beyond the definition of its shape. Key Components are listed in Appendix C6-Table2

"Manufacturing" means the ~~activity~~ activities of physically producing a substance, material or component according to Engineering information. It includes the design and production of tooling, moulds, fixtures, jigs, and patterns. Production engineering. The procurement of materials. The processes of lamination, machining, fabrication, assembly. Quality assurance activities, including inspections, and non-destructive testing.

It excludes~~:~~ activities defined as **Concept Design** or **Engineering**. ~~any modification of geometry, laminates, specifications, or performance-defining characteristics.~~

"Mass Damper": A mass or system that has a degree of freedom relative to the Sprung Mass, which either performs no other function, or while performing another legitimate function has a compliance beyond what is necessary for its safe and reliable operation.

"Mass of the Driver": the mass of the driver with the seat, and driving equipment, as specified in Appendix L of the ISC but excluding the safety harness.

"Nominal Tyre Mass": The Nominal Tyre Mass is defined as the mass of a set of new, production, dry weather, tyres, rounded to the nearest 1kg and determined by the procedure defined in Article C4.7.

"Normal": (to an Aerodynamic Surface or curve) The Normal at any point on an Aerodynamic Surface is a vector perpendicular to that point on the surface, pointing toward the local External Air Stream. For a curve, the Normal at any point is considered the same as that of the surface containing the curve.

"Open Section" and **"Closed Section":** A section through Bodywork, from a plane of intersection, is considered closed if it forms a complete boundary on its own; otherwise, it is considered open.

"Physical Stop": a passive, rigid, and fixed mechanical feature that remains immobile and non-adjustable and limits the travel of a component by preventing further movement through direct physical contact and without reliance on powered or software-controlled systems.

Pit Lane As defined in Appendix B1.

"Primary Heat Exchanger": a Heat Exchanger that uses the air flowing over or through the car to cool a fluid, which includes all of the Heat Exchanger Core, Heat Exchanger Tubes, Header Plates, Header Tanks and Heat Exchanger Fins.

"Secondary Heat Exchanger": A Heat Exchanger that uses a fluid other than the air flowing over or through the car to cool another fluid.

"Simply Connected": A surface or volume is Simply Connected if any closed curve lying on its surface can be contracted to a single point (even if intermediate expansion is required) without leaving the surface.

©2026 Fédération Internationale de l'Automobile

Specialist Supplier has the meaning set out in Article C17.1.9.

"Sprung Mass": All parts of the car that are entirely supported by the Sprung Suspension.

"Sprung suspension": The means whereby all Complete Wheels are suspended from the Sprung Mass by a spring medium.

"State of Deployment": The State of Deployment is defined as starting when the adjustment of Bodywork away from its Corner Mode Position, defined by Articles C3.10.10 and C3.11.6 has been commanded by direct driver input and controlled by the FIA Standard ECU, and ending when the bodywork has returned to the same Corner Mode Position, having been disabled by the FIA Standard ECU.

"Supplying Team" means any F1 Team (or its Technical Partner) supplying TRC, FSC, OSC, OSCNT or DSC.

"Survival Cell": The continuous closed structure containing the fuel tank, the Cockpit and the parts of the Energy Store and MGU-K, listed in Articles C5.18 and C5.19 which lie ahead of X_{PU}=0.

The lower plate of the Energy Store assembly is considered to be part of the Survival Cell.

"Swept Bounding Volume" refers to the three-dimensional space occupied by a component as it moves through its full range of permitted positions. It is the union of all positions the component occupies, forming a continuous volume that fully encloses its motion path.

"Tangency Continuity" also **"Tangent Continuous"**: Tangency Continuity at a point on a curve or surface is achieved if the tangent ~~value is continuous~~ varies continuously with position in any direction. **Tangency Continuity** for a curve or surface is achieved if every point on the curve or surface achieves **Tangency Continuity**. At intersections between two curves or surfaces, Tangency Continuity ~~requires that~~ is achieved if the curves or surfaces be tangent and have coinciding Normals.
~~If two adjacent surfaces are not Tangent Continuous but can become so by applying an Edge Radius of up to 1mm along their boundary, they will be considered tangent continuous at this boundary, provided such an Edge Radius is permitted under the relevant Articles.~~

Technical Partner, has the meaning set out in C17.1.10.

"Telemetry" Wireless transmission of data from remote sources.

"Unsprung mass": All parts of the car composing the sprung suspension external to the sprung mass and/or not entirely supported by the sprung suspension. For the purpose of this definition the boundary between sprung and unsprung mass will be at the suspension members' inboard attachments.

"Wheel Rim": Rim (including lips and barrel), spokes and centre hub.

"Wheel Rim Assembly": The assembly the Wheel Rim, items listed the relevant column in Table C10.7.6, and required fasteners.

©2026 Fédération Internationale de l'Automobile

PART B: DEFINITIONS APPROVED UNDER THE PROVISIONS OF THE PU GOVERNANCE AGREEMENT

Advisory Committee: PUAC
Governance: PU Manufacturers' Governance Agreement / WMSC

"Additive": An Additive is a component added to the fuel at low concentration to improve a particular property of the fuel. These include (but are not limited to) antioxidants, antiknock agents, antistatic additives and deposit control additives.

"Advanced Sustainable Component" (**"AS"**): An Advanced Sustainable (AS) Component is one that is certified to have been derived from a renewable feedstock of non-biological origin (for example, a RFNBO), municipal waste, or non-food biomass. Such biomass includes, but is not limited to, lignocellulosic biomass (including sustainable forest biomass), algae, agricultural residues or waste, and dedicated non-food energy crops grown on marginal land unsuitable for food production. RFNBOs are considered renewable when the hydrogen component is produced in an electrolyser that uses new renewable electricity generation capacity. Pre-commercial plants producing RFNBOs do not need to use electricity from new renewable electricity generating capacity. Pre-commercial plants, producing AS fuel or AS fuel components, may use renewable energy certificates and/or low-carbon hydrogen guarantees-of-origin certificates to improve their GHG emission reduction. Biocomponents from food crops can be regarded as an advanced sustainable component only if they have already fulfilled their food purpose (e.g. waste vegetable oil because it has already been used and is no longer fit for human consumption). Furthermore, the biomass, from which the advanced sustainable component was made, must not originate from land with high biodiversity such as undisturbed primary forest or woodland, land designated for nature protection or highly biodiverse grassland, and were in this state in or after January 2008. Additionally, the biomass must not originate from any land with high-carbon stock such as wetlands and peatlands.

"Alkali Metal": Group 1 elements, excluding hydrogen.

"Ancillary": A component whose function is to support the primary activities of a main system to allow it to operate.

"Aromatics": Monocyclic and bicyclic aromatic rings with or without paraffinic side chains.

"Auxiliary Oil Tank" (**"AOT"**): An Auxiliary Oil Tank (AOT) is a singular vessel connected to the engine whose sole function is to hold engine oil for the replenishment of the engine lubrication system.

"Basic insulation": Insulation applied to Live Parts which provides protection against Hazardous Electric Shock in case of contact.

"Battery Management System" (**"BMS"**): The BMS is a set of important safety systems of the ES. The main function is as a monitoring and a charge-balancing circuit to keep all cells under normal operating conditions, within the specified parameters e.g. voltage, temperature, current, state of balance, defined by the manufacturer.

"Boost": A driver activated mode that maintains or increases the ERS-K power demand.

"Breakout Box": Unit used to perform low voltage looms adaptation.

©2026 Fédération Internationale de l'Automobile

"Car Main Ground": The electrical reference potential of all conductive parts of the car, typically located on the ICE block.

"Cell Tabs": Cell connection terminals which connect the cathode and anode electrodes to the external circuit.

"Combustion chamber": An enclosed space in the engine cylinder controlled by the opening and closing of the poppet valves in which combustion takes place.

"Commercially Available Component": A component that:

a. Is available on a non–exclusive basis and under normal commercial terms to all PU Manufacturers.
b. Has no restrictions or agreements in place that prevents the supplier from openly marketing it.

"Compressor Inlet": A component containing a duct of closed cross section through which all air destined for combustion enters the compressor.

"Compressor Outlet": One or more components containing a duct of closed cross section through which all air destined for combustion exits the compressor.

"Control Electronics - Power Unit" (**"PU-CE"**): Any component used to control Power Unit sub-systems and containing programmable semiconductors or high-power switching devices.

It includes, but is not limited to, MGU-K Control Unit (CU-K), power box, DC-DC Unit, power distribution board.

It excludes any FIA Standard ECU, FIA sensors and ES safety Control Electronics.

"Co-Processing": is the procedure of processing feedstocks blended of sustainable and non-sustainable origin.

"Cylinder Head": The Cylinder Heads are the components that close all the cylinders of each bank of the engine and form the structure between the Combustion Chambers and the camshaft bearings between at least the front of the forward cylinder bore and the rear of the rearward cylinder bore on each bank.

"Cylinder Liner": A component installed into the crankcase whose primary function is to provide a durable surface on which the piston and piston rings run. There must be only a single Cylinder Liner per cylinder bore and the liner may also provide the sealing interface between the cylinder bore and the cylinder head.

"DC-DC Converter": An electronic circuit or electromechanical device, only capable of consuming energy, that converts a source of direct current (DC) from one voltage level to another for use by the electrical and electronic components of the car and Power Unit.

"DC-DC Unit": The unit containing the DC-DC(s) that converts from high to low voltage.

"Deck Height": (Appendix C3, Drawing 6) The distance on each bank between the crank axis and the Top Deck.

"Denaturant": in this instance is a toxic and/or unpalatable adulterant added to ethanol making it unsuitable for human consumption.

©2026 Fédération Internationale de l'Automobile

"Diolefins": Straight chain or branched or monocyclic hydrocarbons (with five or more carbon atoms in any ring) with or without paraffinic side chains, containing two double bonds per molecule.

"Double insulation": Insulation comprising both Basic Insulation and Supplementary Insulation. Double insulation is composed of two layers of insulators with two different failure modes. Those two layers can be tested separately.

"Electronic Box": Unit that contains at least 1 microcontroller.

"Energy Recovery System" (**"ERS"**): A system that is designed to recover energy from the car, store that energy and make it available to propel the car and, optionally, to drive any Ancillaries and actuation systems necessary for its proper function.

"Energy Store" (**"ES"**): The part of ERS that stores energy, including its safety Control Electronics and a minimal housing.

"Engine" ("ICE"): The internal combustion engine including Ancillaries and actuator systems necessary for its proper function.

"Engine Cubic Capacity": The volume swept in the cylinders of the engine by the movement of the pistons. This volume shall be expressed in cubic centimetres. In calculating Engine Cubic Capacity, the number Pi shall be 3.1416.

"Engine Exhaust System": Assembly of parts conveying the engine exhaust fluids from the Cylinder Head up to but not including the Turbo Charger turbine and/or Wastegate. It does not include the Exhaust Tailpipe or Wastegate exit tailpipe(s). A set comprises left and right assemblies.

"Engine Plenum": A pressurised vessel upstream of the Combustion Chamber containing all of the air destined for combustion. This vessel (or vessels) may be comprised of several components. Pipes, as generally understood, conveying air from the compressor to the engine are not part of the Engine Plenum.

"ERS Auxiliary Circuit": Any circuit inside or outside the ES and PU-CE elements which does not form part of the High Voltage DC Bus current flow path that connects the ES to the CU-K and DCDC, and which is typically designed to monitor or to perform functionalities allowing the ERS to operate correctly and safely. Example of auxiliary circuits include, but are not limited to, voltage measurement circuits, insulation measurement circuits, contactor pre-charge circuits, battery (dis)charge connections, cable disconnect detection circuits.

"ERS-K": The only part of the ERS allowed to propel the car. It is composed of the MGU-K, the CU-K and the ERS-K Phase Conductors.

"ERS-K Phase Conductors": The components allowing electrical current to flow between the CU-K and the MGU-K windings composed of conductors (e.g. busbars, cables or wires) and respective connection interfaces not part of the ESME or MGU-K.

"ES Cell": The elementary part of the ES that produces and stores electricity through electro-chemical reactions.

©2026 Fédération Internationale de l'Automobile

"ES Main Enclosure" ("ESME"): External structure that encloses at least the elements listed in Article ~~C5.17.7~~ C5.17.6 and allows their installation inside of the ERS Reference Volume (RV-PU-ERS). It may be composed of elements rigidly linked to form a continuous closed volume.

"Exceptional Logistical Circumstances": means an unforeseen event or set of circumstances beyond the reasonable control of a Fuel Supplier which results in a widespread, systemic disruption across multiple regions or markets of the established logistics or supply chains for AS components and/or AS refinery streams, including war, threat of war, terrorist action or threat thereof, civil commotion, natural physical disasters, epidemics or pandemics, or any binding act, regulation, restriction or ruling of a competent governmental or public authority. For the avoidance of doubt, such circumstances must not be limited to a single facility, supplier, or localized operational issue, but must affect the industry or supply chain on a broader scale. Exceptional Logistical.

"Exclusivity Agreement": An Exclusivity Agreement is deemed to be any agreement concluded between the supplier of such parts (including any PU Manufacturer) and any PU Manufacturer, which has the purpose and/or the effect of restricting or delaying the possibility for such a supplier:

a. to consider any request from another PU Manufacturer; and/or

b. to supply, under reasonable commercial conditions, a part meeting the applicant's specifications.

"Exposed Conductive Part": Conductive part of the electric equipment, which can be touched by a test finger according to IPXXB and which is not normally live, but which may become live under single fault conditions.

"External PU Manufacturer": means a person or entity (including any corporate or unincorporated body) that (directly or indirectly): (i) was registered to supply Power Units, and has withdrawn for any reason in the previous year or the year preceding that; or (ii) a power unit manufacturer that is undertaking development work to supply Power Units but has not yet registered with the FIA to supply for the Championship.
In case (i) the designation will start at the date of withdrawal and will continue to apply until one calendar year after the 31 December of the year in which the PU Manufacturer has officially withdrawn. For up to one further calendar year subsequently, the FIA may apply this designation to such an entity in respect of certain activities or relationships as it may determine. After the end of this this second calendar year the designation will cease to apply in its entirety.
"Flywheel": Inertial components connected directly to the rear of the crankshaft.

"Fuel Flow Meter":A sensor whose function is to measure the flow of the fuel passing through it.

"Fuel Injector": Any device or component that delivers fuel into an oxidiser.

"Hazardous Electric Shock": Physiological reaction generated by an electrical current greater than 2mA passing through the human body.

"Heat Shield": A Heat Shield is a component or an assembly whose primary function is to shield components from thermal radiation and is not permanently attached to another component or assembly (such as by riveting, bonding, welding, brazing, or plating).

"High Pressure Fuel Pump": A mechanical device whose sole function is to pressurise the fuel to the pressure required for the high -pressure injection. It may be Electronically Controlled.

"High Voltage": Classification of an electrical component or circuit whose Maximum Working Voltage is > 30 V AC rms or > 60 V DC.

"HV DC Bus": The set of electrical conductors which are not part of the ES or any PU-CE and that serves as the pathway to the electrical energy directly used to propel the car flowing between those elements.

"ICE Ballast": ICE Ballast is a component fixed to the ICE whose sole purpose is to provide a mass to adjust the final weight of the ICE as fitted.

"Ignition Coil": Assembly including an induction coil that supplies the voltage to the spark plug.

"In-Cylinder Pressure Sensor": A sensor whose function is to measure the pressure in the Combustion Chamber.

"Insert": An Insert within a PU component is a non-dismountable part whose function is solely to locally support a function of this component. A dismountable part is fitted with no interference and can be repeatably removed and refitted without additional processes (such as pressing, machining, welding, brazing). Brackets bonded to a PU component for cable/hose retention or similar will not be considered as Inserts.

"Journal Bearing Diameter": (Appendix C3, Drawing 7) The maximum diameter of the bearing journal across its entire width excluding fillet radii.

"Journal Bearing Width": (Appendix C3, Drawing 7) The minimum width of the inner bearing surface at its minimum diameter. This excludes any additional bearing shell width resulting from edge chamfers, radii or any other relieving feature.

"Knock Sensor": A sensor whose sole function is to measure the knock intensity in the Combustion Chamber.

"Live Part": Conductive part which belongs to a High Voltage component or circuit in normal use and which has an insulation resistance lower than 100Ω/VDC and 500Ω/VAC.

"Maximum Working Voltage": Highest value of AC peak voltage or of DC voltage that can occur under any normal operating conditions according to the manufacturer's specifications, disregarding residual variation of the DC voltage shorter than 100µs. Field weakening is considered as a normal operation, therefore a MGU with a maximum back-EMF higher than the Maximum Working Voltage established by this technical regulation is allowed.

"Metals": are defined as alkali metals, alkaline earth metals, transition metals, actinides, lanthanides, post-transition metals and metalloids.

"MGU-K Control Unit" ("CU-K"): The bi-directional DC-AC power converter sat between the ES and the MGU-K. It is composed of power modules, DC-link capacitor(s), gate driver board(s), CU-K logic board, and may contain other devices that perform functions related to the CU-K operation such as DC bus discharge circuits, sensors, Y-capacitors, housing, and cooling systems.

"MGU-K Mechanical Transmission": The MGU-K Mechanical Transmission is defined as the device that provides any mechanical speed reduction between the MGU-K and a rotating part of the

©2026 Fédération Internationale de l'Automobile

ICE specifically and only for the MGU-K. If the MGU-K Mechanical Transmission connects to a shaft/component on the ICE that is already rotating at a speed above or below crank speed for other purposes, that existing gear ratio (driving some part of the ICE other than the MGU-K) is not included in the MGU-K Mechanical Transmission. The MGU-K Mechanical Transmission may be wholly mounted on the ICE or on the MGU-K or partly on both.

"Minor Parts": Power Unit parts that are considered minor, but which are necessary for its assembly and normal operation. Such parts are typically mountings, brackets, fixings, tubes, hoses, screws, bolts, studs, shims, nuts, washers, gaskets, O-rings and other seals.

"Motor Generator Unit – Kinetic" ("MGU-K"): The Motor Generator Unit - Kinetic is the rotating electromechanical machine that converts electrical energy into mechanical energy (a 'motor') and vice versa (a 'generator').

"Municipal Waste": is household waste and waste similar in nature and composition to household waste. For the purposes of this article, only solid, non-toxic, non-hazardous waste material that cannot be re-used, re-covered or recycled, meeting the principles of the waste hierarchy, is considered suitable source material for AS components or AS fuel production.

"Naphthenes" Monocyclic alkanes (with five or more carbon atoms in the ring) with or without paraffinic side chains.

"Oil Tank": The Oil Tank is a singular vessel directly connected to the engine oil feed at the inlet of the oil pressure pump.

"Olefins": Straight chain and branched monoolefins and diolefins. Monocyclic monoolefins (with five or more carbon atoms in the ring) with or without paraffinic side chains.

"Overtake": A mode, when activated and in accordance with the FIA F1 Regulations, that allows additional Recharge and an alternative ERS-K maximum power profile.

"Oxygenates": Organic compounds containing oxygen.

"Paraffins": Straight chain and branched alkanes.

"Pop-off valve" A device used to release air from the engine intake air system, anywhere downstream of the compressor wheel and upstream of the intake valves, and to recirculate it upstream of the compressor wheel.

"Power Box Unit": An electronic device used to drive the High Pressure Fuel pump, injection and ignition system.

"Power Train": The Power Unit and associated torque transmission systems, up to but not including the drive shafts.

"Power Unit" ("PU"): The internal combustion engine and Turbo Charger, complete with its Ancillaries, the Energy Recovery System and all actuation systems and PU-Control electronics necessary to make them function at all times.

"Pre-Commercial Plant": is one that has a total maximum production capacity of all AS products of 40,000m^3 per year.

©2026 Fédération Internationale de l'Automobile

"Pressure Charging": Increasing the weight of the charge of the fuel/air mixture in the Combustion Chamber (over the weight induced by normal atmospheric pressure, ram effect and dynamic effects in the intake and/or exhaust system) by any means whatsoever. The injection of fuel under pressure is not considered to be Pressure Charging.

"PU component": means any component listed as "ICE", or "EXH", or "TC", or "MGU-K", or "ES", or "PU-CE" in Table 1 of Appendix C4 under the column "PU ELEMENT (Art. 5.1.2)".

"Recharge": the action of harvesting energy using the ERS-K, for the purpose of increasing the state of charge of the Energy Store.

"Reinforced Insulation": Insulation of hazardous-live-parts which provides a degree of protection against electric shock equivalent to Double Insulation.

"Supplementary Insulation": Independent insulation applied in addition to Basic Insulation for protection against Hazardous Electric Shock in the event of a failure.

"Thermal Insulation": Thermal insulation is a part fitted adjacent to a component whose primary function is to reduce the heat transfer between that component and its surroundings.

"Throttle": A variable geometry device or arrangement which restricts the airflow into the ICE by means of a variable area restriction within the intake. The Throttle may only comprise of one or more rotating butterfly valve or one or more rotating barrel valve.

"Top Deck": (Appendix C3, Drawing 6) The single plane surface of the block, normal to the cylinder centreline coincident with the primary connection between the crankcase and the Cylinder Head.

"Trumpet": A Trumpet is a component(s) that extends the geometrical path of air destined for combustion directly into each individual cylinder. The Trumpet(s) may also include any Throttle(s) permitted by C5.6.3.

"Turbo Charger" ("TC"): The assembly of a compressor used for Pressure Charging of the engine, a turbine connected to the Engine Exhaust System used to drive the compressor, the drive system between the compressor and the turbine and their respective housings and bearings.

"Valve Stem": The Valve Stem is the part of the component that slides within the valve guide during operation.

"Wastegate": A device located anywhere downstream of the exhaust valves and upstream of the turbine wheel, to allow exhaust fluid to enter the exhaust tailpipe without entering the turbine wheel.

2027

PART C: DEFINITIONS WITH SHARED APPROVAL

Advisory Committee: TAC and PUAC
Governance: F1 Commission / PU Manufacturers' Governance Agreement / WMSC

"Ceramic Material": (e.g. Al_2O_3, SiC, B_4C, Ti_5Si_3, SiO_2, Si_3N_4) – These are inorganic, nonmetallic solids.

"Coating": a covering that is applied to the surface of an object, referred to as the substrate.

"Commercially Available Material": A material that:

a. Is available on a non–exclusive basis and under normal commercial terms to all F1 Teams *and* PU Manufacturers.

b. Is not supplied to a specification tighter than the standards listed in Section C15.2 (where applicable) with a primary aim of improving the baseline mechanical properties. Additional specifications concerned with process control and/or quality control are permissible.

c. Has no restrictions or agreements in place that prevents the supplier from openly marketing it.

"Composite Materials": These are materials where a matrix material is reinforced by either a continuous or discontinuous phase. The matrix can be metallic, ceramic, polymeric or glass based. The reinforcement can be present as long fibres (fibre length greater than 13mm) or short fibres, whiskers and particles (discontinuous reinforcement). Nanoscale reinforced materials are to be considered as composites.

"Design Specification": means, in respect of a component all design (including three–dimensional geometry, tolerances, materials, surface finishes and design standards), manufacturing, installation and operational information related to that component.

"Foil Metallurgy": A process by which a material or component is made by the consolidation of metallic foils (by co–forging, welding etc.) which increases the mechanical properties of the material with respect to those of a bulk material. For this definition, a foil is considered a material with a thickness of less than 1mm.

"Glass": A glass is a material or phase with no crystal structure, i.e. it is amorphous. Vitreous is an alternative name for glassy phases.

"Intellectual Property": means:

a. patents, rights to inventions, designs, copyright and related rights, database rights, trade marks and trade names, rights in get–up and related goodwill and the right to sue for passing off or unfair competition (in each case whether registered, registerable or unregistered);

b. proprietary rights in domain names;

c. rights to use, and protect the confidentiality of, trade secrets, know–how and confidential information;

d. applications, and rights to apply for and be granted registrations, including extensions and renewals of, such rights; and

e. all other rights of a similar nature or having an equivalent effect anywhere in the world.

©2026 Fédération Internationale de l'Automobile

"Intermetallic Materials": (e.g., TiAl, NiAl, FeAl, Cu_3Au, NiCo) – These are materials where the material is based upon intermetallic phases, i.e. the matrix of the material consists of greater than 50%v/v intermetallic phase(s). An intermetallic phase is a solid solution between two or more metals exhibiting either partly ionic or covalent, or metallic bonding with a long−range order, in a narrow range of composition around the stoichiometric proportion.

"Material Composition limit": Any value quoted for a materials composition limit, be that weight%, atomic% or volume fraction(%), is the absolute limit that will be accepted as legal. The value includes allowances for measurement accuracies and uncertainties. For example, if a regulation quotes, element X must be less than 2.0 wt%, then any measurement of element X must be less than 2.0 wt % for the material to be legal.

"Metal Matrix Composites" ("MMC"): These are composite materials with a metallic matrix containing a minimum ratio of 2% volume/volume of other ceramic, metallic, carbon or intermetallic phase which is not soluble in the liquid phase at 100°C above the melting point of the metallic matrix.

"Metallic Materials Used for Additive Manufacture": A group of materials in powder form used for manufacturing near−net shape components from a digital model processed in separate layers and joined by either selective melting, bonding, or sintering.

"Nanomaterials": These are purposely created objects that have one or more dimensions (e.g., length, width, height, diameter) which is less than 100nm. (100x10−9m) as defined in ISO 80004−1:2023.

"**Nanoscale**": Something is considered to be Nanoscale if any dimension is less than 100nm.

"Outsourcing" or **"Outsourced":** means procuring or procured goods or services by contract with an external supplier.

"Polymeric Material": is composed of chains of monomers, where each monomer is a repeating unit consisting of specific atoms or groups of atoms covalently bonded together. Polymers can be either organic or inorganic and exhibit viscoelastic behaviour.

"Related Party" has the meaning set out in Section D: Financial Regulations (F1 Team).

"**Shape Memory Material":** A material that is configured to move reversibly between two (or more) different shapes when it is subjected only to a non−mechanical uniform stimulus (thermal, electrical, magnetic, optical, etc.), or exhibits a reversible phase change when subject to an applied stress. For clarity, this does not include consequential geometric changes that result solely from the effects of thermal expansion.

"Surface Texturing": Modification of a component surface to obtain a defined patterning to enhance the tribological performance.

"**X Based Alloy":** (e.g., Ni based alloy) – X must be the most abundant element in the alloy on a %w/w basis. The minimum possible weight percent of the element X must always be greater than the maximum possible of each of the other individual elements present in the alloy.

"X−Y Based Alloy": (e.g., Al−Cu based alloy) – X must be the most abundant element. In addition, element Y must be the second highest constituent (%w/w), after X in the alloy. The mean content

of Y and all other alloying elements must be used to determine the second highest alloying element (Y).

2027

APPENDIX C2: REGULATION VOLUMES

Advisory Committee: TAC (Unless otherwise stated)

Governance: F1 Commission / WMSC (Unless otherwise stated)

1 General Definitions

1.1 This Appendix defines the construction of CAD reference sections, Reference Surfaces and Reference Volumes used throughout the Regulations to assess legality in conjunction with Article C3. However numerous further usages of such definitions are used in other Articles.

1.2 Unless otherwise stated, only the declared reference section, Reference Surface or Reference Volume from each Article can be used to assess legality. All other geometry used during the construction of these sections, surfaces or volumes must be considered for reference purposes only.

1.3 In cases where an object (surface or volume) is trimmed using a surface, this must be performed by first finding the intersection between the object and the surface and then partitioning the object into two, by separating it at this intersection. One of these two parts is then discarded according to the relevant Article and the residual of the trimmed object is all that remains after the operation.

1.4 All volumes are implicitly symmetrical about the plane Y=0.

1.5 The prefix "RV-" always refers to a Reference Volume, whereas the prefix "RS-" refers to a Reference Surface.

1.6 The CAD models of all the volumes and surfaces listed in this Appendix are available for F1 Teams or PU Manufacturers to download with a standard range of parameters. The FIA will provide F1 Teams or PU Manufacturers with a specific model on request.

1.7 Should an inconsistency arise between a volume generated manually using the process outlined in this Article, or a volume that has been downloaded by the process outlined in Article 1.6 of this Appendix, the FIA will adjudicate on a case-by-case basis the volume that will be applicable and correct the one that will be judged to have an inconsistency or error.

2 Legality Volumes or Surfaces Defined by CAD Models

2.1 The legality volumes and surfaces listed below are defined exclusively by CAD data and are available to download from the FIA's CAD Portal. Unless otherwise stated, the volumes must be positioned with the origin of the model at the coordinates given and with the model axes parallel to, and in the same direction as the corresponding car axes.

Volume or Surface	CAD Part No	Revision	Notes
RV-PU-ICE *	FIA-LEG-0076	C	Positioned at [X_{PU}=0, 0, 0]
RV-PU-OT *	FIA-LEG-0075	A	Positioned at [X_{PU}=0, 0, 0]
RV-PU-TC *	FIA-LEG-0077	A	Positioned at [X_{PU}=0, 0, 0]
RS-PU-FWD-ERS *	FIA-LEG-0101	B	Positioned at [X_{PU}<= −360, 0, 0]
RS-FWD-FUEL-LIMIT	FIA-LEG-0240	B	Positioned at [X_C=0, 0, 0]
RV-CH-MID-MIN	FIA-LEG-0001	E	Positioned at [X_C=0, 0, 0]
RV-COCKPIT-ENTRY	FIA-LEG-0004	C	Positioned at [X_C=0, 0, 0]

©2026 Fédération Internationale de l'Automobile

Volume or Surface	CAD Part No	Revision	Notes
RV-COCKPIT-DRIVER	FIA-LEG-0242	A	Positioned at [X_C=0, 0, 0]
RS-FWH-DRUM	FIA-LEG-0141	E	Positioned at [X_W, Y_W, Z_W] = [0, 0, 0] (front wheel)
RS-RWH-DRUM	FIA-LEG-0190	G (2026 Championship only) or H	Positioned at [X_W, Y_W, Z_W] = [0, 0, 0] (rear wheel)
RV-F-RIM-MIN	FIA-LEG-0138	D	Positioned at [X_W, Y_W, Z_W] = [0, 0, 0] (front wheel)
RV-R-RIM-MIN	FIA-LEG-0139	D	Positioned at [X_W, Y_W, Z_W] = [0, 0, 0] (rear wheel)
RS-F-RIM-DISC	FIA-LEG-0185	B	Positioned at [X_W, Y_W, Z_W] = [0, 0, 0] (front wheel)
RS-R-RIM-DISC	FIA-LEG-0186	B	Positioned at [X_W, Y_W, Z_W] = [0, 0, 0] (rear wheel)
RV-DIFF	FIA-LEG-0137	A	Positioned at [X_R=0, 0, 0]
RV-COCKPIT-HELMET	FIA-LEG-0012	B	Positioned at [X_C=0, 0, 0]
RS-FLOOR-WINGLET	FIA-LEG-0192	E	Positioned at [X_R=0, 0, 0]
RV-FLOOR-WINGLET	FIA-LEG-0204	C	Positioned at [X_R=0, 0, 0]
RV-TAIL-RIS	FIA-LEG-0168	A	Positioned at [X_{DIF}=0, 0, 0]
RV-FWH-LIP	FIA-LEG-0171	C	Positioned at [X_W, Y_W, Z_W] = [0, 0, 0] (front wheel)
RV-RWH-LIP	FIA-LEG-0179	C	Positioned at [X_W, Y_W, Z_W] = [0, 0, 0] (rear wheel)
RV-FWH-SCO	FIA-LEG-0172	B	Positioned at [X_W, Y_W, Z_W] = [0, 0, 0] (front wheel)
RV-RWH-SCO	FIA-LEG-0180	A	Positioned at [X_W, Y_W, Z_W] = [0, 0, 0] (rear wheel)
RV-RWH-FDEF	FIA-LEG-0181	C	Positioned at [X_W, Y_W, Z_W] = [0, 0, 0] (rear wheel)
RS-FWH-RDEF	FIA-LEG-0207	C	Positioned at [X_W, Y_W, Z_W] = [0, 0, 0] (front wheel)
RV-FWH-RDEF	FIA-LEG-0208	C	Positioned at [X_W, Y_W, Z_W] = [0, 0, 0] (front wheel)
RV-RWH-STAY	FIA-LEG-0182	C	Positioned at [X_W, Y_W, Z_W] = [0, 0, 0] (rear wheel)
RV-HALO	FIA-LEG-0237	~~B~~ C	Positioned at [X_C=0, 0, 0]
RV-LATERAL-SAFETY-LIGHT	FIA-LEG-0238	B	Positioned at [X_C=0, 0, 0]
RV-SKID-FWD	FIA-LEG-0236	~~C~~ D	Positioned at [X_F=500, 0, 0]
RV-SKID-MID	FIA-LEG-0235	~~C~~ D	Positioned as specified in C3.6.1
RV-SKID-REAR	FIA-LEG-0256	~~A~~ B	Positioned as specified in C3.6.1
RV-FLOOR-WINGLET-ENVELOPE	FIA-LEG-0248	A	Positioned at [X_R=0, 0, 0]

* *Advisory Committee: PUAC*

Governance: PU Manufacturers' Governance Agreement / WMSC

©2026 Fédération Internationale de l'Automobile

3 ERS Reference Volume (RV-PU-ERS)

Advisory Committee: PUAC
Governance: PU Manufacturers' Governance Agreement / WMSC

RV-PU-ERS is composed of the following elements:

3.1 The Reference Surface RS-PU-FWD-ERS must be positioned with the origin of the model at [X_{PU} <= −360, 0, 0].

3.2 On the plane X_{PU} = 0, a simple, closed polygon whose edges pass through the following [Y, Z] vertices sequentially:

a. [0, 1], [240, 1], [280, 4.1], [280,51], [230,51], [230, 380], [0, 380], [0, 1]

3.3 Once the surface in §3.2 is fully defined, it must be extruded along X to X_{PU} = −1500.

3.4 Once the volume in §3.3 is fully defined; it must be trimmed by the surface RS-PU-FWD-ERS with all material ahead of this surface discarded.

3.5 The fully defined volume in §3.4 is "RV-PU-ERS"

4 Floor Body Reference Volume (RV-FLOOR-BODY)

RV-FLOOR-BODY is composed of the following elements:

4.1 On a plane through Z=0, a simple, closed polygon whose edges pass through the following [X, Y] vertices sequentially:

a. [X_F = 350, 0], [X_F = 350, 25], [X_F = 1250, 340], [X_F = 1400, 390], [X_R = −1050, 390], [X_R = −775, 350], [X_R = -625, 300], [X_R = −475, 240], [X_R= 300, 75], [X_R= 300, 0], [X_F = 350, 0].

4.2 Once the surface in §4.1 is fully defined, it must be extruded along Z to Z = 275.

4.3 Once the volume in §4.2 is fully defined, it must be trimmed with a plane passing through the following three points with all material below the plane discarded.

a. [X_F = 1650, 250, 0], [X_F = 850, 250, 0], [X_F = 1650, 375, 10].

4.4 Once the volume in §4.3 is fully defined, an Edge Radius of R200, applied to the external corner that lies on the X-Aligned axis through [Y, Z] = [250, 0].

4.5 On a plane through Y=0, a section whose edges pass through the following [X, Z] vertices sequentially:

a. [X_F = 1450, 275], [X_F = 1450, 75], [X_R = −600, 75], [X_R = −350, 175], [X_R = 300, 250].

4.6 Once the section in §4.5 is fully defined it must be extruded along Y to Y= 400.

4.7 Once the volume in §4.4 and the sheet in §4.6 are fully defined, the volume must be trimmed with the sheet with all material above the sheet discarded.

4.8 Once the volume in §4.7 is fully defined, it must be trimmed with a plane passing through the following three points with all material forward of the plane discarded.

a. [X_F = ~~350~~ 650, 0, 275], [X_F = ~~425~~ 725, 0, 0], [X_F = ~~425~~ 725, 75, 0].

4.9 On a plane through Z=50, a simple, closed polygon whose edges pass through the following [X, Y] vertices sequentially:

a. [X_F = 1100, 0], [X_F = 1100, 770], [X_R = −335, 700], [X_R = −335, 400], [X_R = −150, 365], [X_R = 300, 365], [X_R = 300, 0], [X_F = 1100, 0].

4.10 Once the surface in §4.9 is fully defined, it must be extruded along Z to Z = 250.

4.11 On a plane through Y=0, a section whose edges pass through the following [X, Z] vertices sequentially:

a. [X_F = 1100, 175], [X_F = 1775, 75], [X_R = −600, 75], [X_R = −350, 175], [X_R = 300, 250], [X_R = 350, 250].

4.12 Once the section in §4.11 is fully defined, it must be extruded along Y to Y = 770.

4.13 Once the volume in §4.10 and the sheet in §4.12 are fully defined, the volume must be trimmed with the sheet with all material above the sheet discarded.

4.14 On a plane through X_F = 930, a section whose edges pass through the following [Y, Z] vertices sequentially:

a. [350, 175], [650, 125], [770, 75].

4.15 Once the section in §4.14 is fully defined, it must be extruded along X to X_F = 1775.

4.16 Once the volume in §4.13 and the sheet in §4.15 are fully defined, the volume must be trimmed with the sheet with all material above the sheet discarded.

4.17 An axis-aligned cuboid, which has one interior diagonal defined by the points:

a. [X_R = −600, 400, 75], [X_R = −335, 760, 250].

4.18 Once the volume in §4.17 is fully defined, it must be trimmed with a plane passing through the following three points with all material inboard of the plane discarded.

a. [X_R = −600, 550, 75], [X_R = −335, 400, 75], [X_R = −335, 400, 250].

4.19 Once the volume in §4.18 is fully defined, it must be subtracted from the volume defined in §4.16 to leave one unified volume.

4.20 On a plane through Y=0, a simple, closed polygon whose edges pass through the following [X_R, Z] vertices sequentially:

a. [−525, 50], [300, 165], [300, 50], [−525, 50].

4.21 Once the surface in §4.20 is fully defined, it must be extruded along Y to Y = 345.

4.22 An axis-aligned cuboid, which has one interior diagonal defined by the points:

a. [X_R = −325, 345, 50], [X_R = 300, 400, 100].

4.23 Once the volumes in §4.21 and §4.22 are fully defined, they must be subtracted from the volume defined in §4.19 to leave one unified volume.

4.24 Once the volumes in §4.8 and §4.23 are fully defined, they must be united to create a single unified volume.

The fully defined volume in §4.24 is “RV-FLOOR-BODY”.

2027

5 Floor Sidewall Reference Volume (RV-FLOOR-SIDEWALL)

RV-FLOOR-SIDEWALL is composed of the following elements:

5.1 On a plane through Z = 35, a simple, closed polygon whose edges pass through the following [X_R, Y] vertices sequentially:

a. [−335, 400], [−150, 365], [350, 365], [350, 345], [−335, 345], [−335, 400].

5.2 Once the surface in §5.1 is fully defined, it must be extruded along Z to Z = 275.

5.3 Once the volume in §5.2 is fully defined, it must be trimmed with the sheet from §4.12 with all material above the sheet discarded.

The fully defined volume in §5.3 is "RV-FLOOR-SIDEWALL".

6 Floor Foot Reference Volume (RV-FLOOR-FOOT)

RV-FLOOR-FOOT is composed of the following elements:

6.1 On a plane through Z = 50, a simple, closed polygon whose edges pass through the following [X_F, Y] vertices sequentially:

a. [650, 650], [650, 890], [825, 890], [1350, 760], [1350, 625], [650, 650].

6.2 Once the surface in §6.1 is fully defined, it must be extruded along Z to Z = 100.

The fully defined volume in §6.2 is "RV-FLOOR-FOOT".

7 Floor Board Reference Volume (RV-FLOOR-BOARD)

RV-FLOOR-BOARD is composed of the following elements:

7.1 On a plane through Z = 70, a simple, closed polygon whose edges pass through the following [X_F, Y] vertices sequentially:

a. [650, 890], [825, 890], [1350, 750], [1350, 710], [750, 800], [650, 800], [650, 890].

7.2 Once the surface in §7.1 is fully defined, it must be extruded along Z to Z = 450.

7.3 Once the volume in §7.2 is fully defined, it must be trimmed with a plane passing through the following three points with all material above the plane discarded.

a. [X_F = 1350, 730, 200], [X_F = 1350, 710, 200], [X_F = 1000, 890, 400].

The fully defined volume in §7.3 is "RV-FLOOR-BOARD".

8 Floor Bib Reference Volume (RV-FLOOR-BIB)

RV-FLOOR-BIB is composed of the following elements:

~~8.1 On a plane through Z = 0, a simple, closed polygon whose edges pass through the following [X, Y] vertices sequentially:~~

~~a. [X_F = 425, 0], [X_F = 425, 100], [X_F = 1075, 300], [X_F = 1200, 300], [X_F = 1200, 0], [X_F = 425, 0].~~

~~8.2 Once the surface in §8.1 is fully defined, it must be extruded along Z to Z = 50.~~

8.1 An axis aligned cuboid, which has one interior diagonal defined by the points:

a. [X_F = 725, 0, 0], [X_F = 1025, 300, 50].

8.2 Once the volume in §8.1 is fully defined, it must be trimmed with a plane passing through the following three points with all material outboard of the plane discarded.

a. [X_F = 350, 25, 0], [X_F = 350, 25, 50], [X_F = 1250, 340, 0].

The fully defined volume in §8.2 is "RV-FLOOR-BIB".

9 Floor Leading Edge Device (RV-FLOOR-LED)

RV-FLOOR-LED is composed of the following elements:

9.1 An axis-aligned cuboid, which has one interior diagonal defined by the points:

a. [X_F = 1075, 310, 50], [X_F = 1225, ~~600~~ 480, 150].

~~9.2 Once the volume in §9.1 is fully defined, it must be trimmed with the sheet defined in §4.15 with all material above the sheet discarded.~~

The fully defined volume in ~~§9.2~~ §9.1 is "RV-FLOOR-LED".

10 Floor Corner Reference Volume (RV-FLOOR-CORNER)

RV-FLOOR-CORNER is composed of the following elements:

10.1 On a plane through Z = 50, a simple, closed polygon whose edges pass through the following [X, Y] vertices sequentially:

a. [X_R = −825, 750], [X_R = −825, 625], [X_R = −495, 580], [X_R = −495, 510], [X_R = −335, 420], [X_R = −335, 750], [X_R = −825, 750].

10.2 Once the surface in §10.1 is fully defined, it must be extruded along Z to Z = 85.

10.3 Once the volume in §10.2 is fully defined, it must be trimmed with a plane passing through the following three points with all material outboard of the plane discarded.

a. [X_F = 1100, 770, 50], [X_R = −335, 700, 50], [X_R = −335, 700, 100]

The fully defined volume in §10.3 is "RV-FLOOR-CORNER".

11 Plank Reference Volume (RV-PLANK)

RV-PLANK is composed of the following elements:

11.1 On a plane through Z=0, a simple, closed polygon whose edges pass through the following [X, Y] vertices sequentially:

a. [X_F=~~430~~ 730, 0], [X_F=~~430~~ 730, 75], [X_F=~~690~~ 990, 125], [X_R=−1300, 125], [X_R=−350, 50], [X_R=−350, 0], [X_F=~~430~~ 730, 0]

11.2 Once the surface in §11.1 is fully defined, a fillet of radius 25mm must be applied at vertex at [X_F=~~430~~ 730, 75] and a fillet of radius 2000mm must be applied at the vertices at [X_F=~~690~~ 990, 125] and [X_R=−1300, 125].

11.3 Once the surface in §11.2 is fully defined it must be extruded along Z to Z=−10.

11.4 Once the volume in §11.3 is fully defined; a chamfer of 6mm x 100mm must be applied to the lower edge at X_R=−350 and a chamfer of 6mm x 12mm must be applied to the remaining lower edges.

11.5 The fully defined volume in §11.4 is **"RV-PLANK"**.

12 Front Bodywork Reference Volume (RV-BODY-FRONT)

RV-BODY-FRONT is composed of the following elements:

12.1 A cylinder of diameter 11,000mm centred on the Y-Aligned axis [X_C, Z] = [−1000, −4853], extruded between Y = 0, to Y = 400.

12.2 On a plane through Y = 0, a simple, closed polygon whose edges pass through the following [X, Z] vertices sequentially:

a. [X_C = −875, 195], [X_C = −875, 645], [X_F = −1300, 645], [X_F = −1300, 125], [X_F = −1000, 125], [X_C = −1830, 225], [X_C = −875, 195].

12.3 Once the surface in §12.2 is fully defined, it must be extruded along Y to Y = 400.

12.4 Once the volumes in §12.1 and §12.3 are fully defined, they must be combined with ALL non-overlapping regions discarded.

12.5 On a plane through Y = 0, a simple, closed polygon whose edges pass through the following [X_C, Z] vertices sequentially:

a. [−875, 75], [320, 75], [320, 680], [0, 680], [0, 770], [−350, 770], [−350, 645], [−875, 645], [−875, 75].

12.6 Once the surface in §12.5 is fully defined, it must be extruded along Y to Y = 400.

12.7 An axis-aligned cuboid, which has one interior diagonal defined by the points:

a. [X_C, 170, 680], [X_C = 75, 400, 970].

12.8 Once the volumes in §12.4, §12.6 and §12.7 are fully defined, they must be combined to make one unified volume.

12.9 On a plane through Z = 75, a simple, closed polygon whose edges pass through the following [X, Y] vertices sequentially:

a. [X_F = −1300, 0], [X_F = −1300, 150], [X_C = −1830, 200], [X_C = −1015, 265], [X_C = −400, 400], [X_C = 75, 400], [X_C = 75, 170], [X_C = 320, 170], [X_C = 320, 0], [X_F = −1300, 0].

12.10 Once the surface in §12.9 is fully defined, it must be extruded along Z to Z = 970.

12.11 Once the volumes in §12.8 and §12.10 are fully defined, they must be combined with all non-overlapping regions discarded.

The fully defined volume in §12.11 is "RV-BODY-FRONT"

12.12 RV-BODY-FRONT is further split by the planes defined in Article 2.7:

a. RV-NOSE refers to a sub part of RV-BODY-FRONT forward of X_A = 0.

b. RV-CH-FRONT refers to a sub part of RV-BODY-FRONT between X_A = 0 and a plane through X_C = −875.

c. RV-CH-MID refers to a sub part of RV-BODY-FRONT rearwards of a plane through X_C = −875.

The fully defined volume in §12.12a is "RV-NOSE".

2027

The fully defined volume in §12.12b is "RV-CH-FRONT".

The fully defined volume in §12.12c is "RV-CH-MID".

13 Survival Cell Front Minimum Reference Volume (RV-CH-FRONT-MIN)

RV-CH-FRONT-MIN is composed of the following elements:

13.1 A volume bounded by X_C=−2030 and X_C=−875 that must be symmetrical about Y=0, and when cut with any X plane, the cross section must:

a. Contain a four-sided section, with two sides parallel to Z.

b. Have width that varies linearly from 268 at X_C=−2030 to 380mm at X_C=−1330 and then linearly to 490mm at X_C=−875.

c. Have height at Y=0 that varies linearly from 300 at X_C=−2030 to 415 at X_C=−875.

d. Have the side visible from above, a convex circular arc, with radius varying linearly from R = 400 at X_C=−2030 to R=2500 at X_C=−875.

e. Have the side visible from below, a convex circular arc, with a constant radius of R = 2500.

13.2 Once the volume in §13.1 is fully defined, it must be trimmed with the plane X_A = 0 with all material ahead of this plane discarded.

13.3 Once the volume in §13.2 is fully defined, radii with a convex radius of curvature of 50mm must be applied to the longitudinal edges, drawn tangent to both surfaces and perpendicular to the boundary.

The fully defined volume in §13.3 is "RV-CH-FRONT-MIN".

14 Mirror Body Reference Volume (RV-MIRROR-BODY)

RV-MIRROR-BODY is composed of the following elements:

14.1 On a plane through Z = 640, a simple, closed polygon whose edges pass through the following [X, Y] vertices sequentially:

a. [X_C = −830, 470], [X_C = −730, 470], [X_C = −650, 680], [X_C = −750, 680], [X_C = −830, 470].

14.2 Once the surface in §14.1 is fully defined, it must be extruded along Z to Z = 720.

The fully defined volume in §14.2 is "RV-MIRROR-BODY".

15 Driver Cooling Reference Volume (RV-DRI-COOL)

RV-DRI-COOL is composed of the following elements:

15.1 An axis-aligned cuboid, which has one interior diagonal defined by the points:

a. [X_A = 100, 0, 550], [X_A = 525, 125, 675].

15.2 A cylinder of diameter 11 065mm, centred on the Y-Aligned axis [X_C, Z] = [−1000, −4855], extruded between Y = 0, to Y = 125.

15.3 Once the volumes in §15.1 and §15.2 are fully defined, they must be combined with all non-overlapping regions discarded.

The fully defined volume in §15.3 is "RV-DRI-COOL".

16 Sidepod Reference Volume (RV-SIDEPOD)

RV-SIDEPOD is composed of the following elements:

16.1 On a plane through Z = 125, a simple, closed polygon whose edges pass through the following [X_F, Y] vertices sequentially:

a. [900, 0], [900, 275], [1200, 715], [1300, 715], [1300, 0], [900, 0].

16.2 Once the surface in §16.1 is fully defined, it must be extruded along Z to Z = 600.

The fully defined volume in §16.2 is "RV-SIDEPOD".

17 Engine Cover Reference Volume (RV-EC)

RV-EC is composed of the following elements:

17.1 On a plane through Z = 50, a simple, closed polygon whose edges pass through the following [X, Y] vertices sequentially:

a. [X_F = 1300, 0], [X_F = 1300, 715], [X_R = −1500, 715], [X_R = −500, 575], [X_R = −500, 350], [X_R = −50, 300], [X_R = −50, 0], [X_F = 1300, 0].

17.2 Once the surface in §17.1 is fully defined, it must be extruded along Z to Z = 600.

17.3 Once the volume in §17.2 is fully defined, it must be trimmed with a plane passing through the following three points with all material above the plane discarded.

a. [X_C, 0, 600], [X_C, 725, 600], [X_R = −50, 0, 350].

17.4 On a plane through Y=0, a simple, closed polygon whose edges pass through the following [X, Z] vertices sequentially:

a. [X_C = 320, 50], [X_R = −50, 50], [X_R = −50, 600], [X_C = 500, 970], [X_C = 320, 970], [X_C = 320, 50].

17.5 Once the surface in §17.4 is fully defined, it must be extruded along Y to Y = 400.

17.6 Once the volume in §17.5 is fully defined, it must be trimmed with a plane passing through the following three points with all material outboard of the plane discarded.

a. [X_R = −500, 350, 50], [X_R = −50, 300, 50], [X_R = −50, 300, 600].

17.7 On a plane through Y=0, a simple, closed polygon whose edges pass through the following [X, Z] vertices sequentially:

a. [X_R = −150, 825], [X_R = −900, 950], [X_C = 500, 970], [X_C = 500, 500], [X_R = −50, 500], [X_R = −150, 825].

17.8 Once the surface in §17.7 is fully defined, it must be extruded along Y to Y = 25.

17.9 An axis-aligned cuboid, which has one interior diagonal defined by the points:

a. [X_C = 75, 170, 50], [X_C = 320, 400, 970].

17.10 Once the volumes in §17.3, §17.6, §17.8 and §17.9 are fully defined they must be united to create a single unified volume.

The fully defined volume in §17.10 is "RV-EC".

©2026 Fédération Internationale de l'Automobile

18 Bodywork Aperture Reference Volume (RV-BW-APERTURE)

RV-BW-APERTURE is composed of the following elements:

18.1 On a plane through Z = 375, a simple, closed polygon whose edges pass through the following [X, Y] vertices sequentially:

a. [X_F = 1400, 380], [X_R = −800, 80], [X_R = −800, 400], [X_R = −1650, 600], [X_F = 1400, 600], [X_F = 1400, 380].

18.2 Once the surface in §18.1 is fully defined, it must be extruded along Z to Z = 700.

The fully defined volume in §18.2 is "RV-BW-APERTURE".

19 Tail Reference Volume (RV-TAIL)

RV-TAIL is composed of the following elements:

19.1 On a plane through Y = 0, a simple, closed polygon whose edges pass through the following [X_{DIF}, Z] vertices sequentially:

a. [−110, 0], [−110, 500], [260, 500], [450, 380], [760, 380], [760, 175], [450, 175], [10, 0], [−110, 0].

19.2 Once the surface in §19.1 is fully defined, it must be extruded along Y to Y = 145.

19.3 On a plane through Z = 0, a simple, closed polygon whose edges pass through the following [X_{DIF}, Y] vertices sequentially:

a. [−110, 0], [760, 0], [760, 60], [10, 145], [−110, 145], [−110, 0].

19.4 Once the surface in §19.3 is fully defined, it must be extruded along Z to Z = 500.

19.5 Once the volumes in §19.2 and §19.4 are fully defined, they must be combined with all non-overlapping regions discarded.

The fully defined volume in §19.5 is "RV-TAIL".

20 Tailpipe Reference Volume (RV-TAILPIPE)

RV-TAILPIPE is composed of the following elements:

20.1 An axis-aligned cuboid, which has one interior diagonal defined by the points:

a. [X_R = −55, 0, 350], [X_R = 400, 75, 550].

The fully defined volume in §20.1 is "RV-TAILPIPE".

21 Front Wing Reference Section (RS-FW-SECTION)

RS-FW-SECTION is composed of the following elements:

21.1 A plane through the following three points:

a. [X_F = −1250, 100, 0], [X_F = −1025, 700, 0], [X_F = −1025, 700, 275].

The fully defined plane in §21.1 is "RS-FW-SECTION".

22 Front Wing Profiles Reference Volume (RV-FW-PROFILES)

RV-FW-PROFILES is composed of the following elements:

22.1 On a plane through $X_F = -1250$, a simple, closed polygon whose edges pass through the following [Y, Z] vertices sequentially:

a. [0, 60], [100, 60], [675, 115], [675, 275], [400, 300], [0, 200], [0,60].

22.2 Once the surface in §22.1 is fully defined, it must be extruded along X to $X_F = -475$.

22.3 Once the volume in §22.2 is fully defined, it must be trimmed using the plane defined in §**21.1** with all material forward of the plane discarded.

22.4 Once the volume in §22.3 is fully defined, it must be trimmed with a plane passing through the following three points with all material rearward of the plane discarded.

a. [$X_F = -750$, 0, 0], [$X_F = -500$, 400, 0], [$X_F = -500$, 400, 275].

The fully defined volume in §22.4 is "RV-FW-PROFILES".

23 Front Wing Endplate Body Reference Volume (RV-FWEP-BODY)

RV-FWEP-BODY is composed of the following elements:

23.1 An axis-aligned cuboid, which has one interior diagonal defined by the points:

a. [$X_F = -1250$, 575, 75], [$X_F = -300$, 680, 375].

23.2 Once the volume in §23.1 is fully defined, it must be trimmed using the plane defined in §21.1 with all material forward of the plane discarded.

23.3 A cylinder of diameter 925mm centred on the Y-Aligned axis [X_F, Z] = [0, 360], extruded between Y = 560, to Y = 900.

23.4 Once the cylinder in §23.3 is fully defined, it must be used to trim the volume in §23.2 with both the cylinder and all overlapping regions discarded.

23.5 Once the volume in §23.4 is fully defined, it must be trimmed with a plane passing through the following three points with all material above the plane discarded.

a. [$X_F = -750$, 675, 375], [$X_F = -1050$, 675, 250], [$X_F = -1050$, 600, 250].

The fully defined volume in §23.5 is "RV-FWEP-BODY".

24 Front Wing Endplate Outer Footplate Reference Volume (RV-FWEP-OFP)

RV-FWEP-OFP is composed of the following elements:

24.1 An axis-aligned cuboid, which has one interior diagonal defined by the points:

a. [$X_F = -1250$, 750, 75], [$X_F = -300$, 900, 170].

24.2 Once the volume in §24.1 is fully defined, it must be trimmed using the plane defined in §21.1 with all material forward of the plane discarded.

24.3 Once the volume in §24.2 is fully defined, it must be trimmed with the cylinder defined in §**23.3** with both the cylinder and all overlapping regions discarded.

The fully defined volume in §24.3 is "RV-FWEP-OFP".

25 Front Wing Endplate Inner Footplate Reference Volume (RV-FWEP-IFP)

RV-FWEP-IFP is composed of the following elements:

©2026 Fédération Internationale de l'Automobile

25.1 An axis-aligned cuboid, which has one interior diagonal defined by the points:

a. [X_F = −1250, 560, 75], [X_F = −300, 750, 120].

25.2 Once the volume in §25.1 is fully defined, it must be trimmed using the plane defined in §21.1 with all material forward of the plane discarded.

25.3 Once the volume in §25.2 is fully defined, it must be trimmed with the cylinder defined in §23.3 with both the cylinder and all overlapping regions discarded.

The fully defined volume in §25.3 is "RV-FWEP-IFP".

26 Front Wing Endplate Diveplane Reference Volume (RV-FWEP-DIVEPLANE)

RV-FWEP-DIVEPLANE is composed of the following elements:

26.1 An axis-aligned cuboid, which has one interior diagonal defined by the points:

a. [X_F = −950, 575, 175], [X_F = −550, 900, 340].

26.2 Once the volume in §26.1 is fully defined, it must be trimmed with the plane defined in §23.5 with all material above the plane discarded.

The fully defined volume in §26.2 is "RV-FWEP-DIVEPLANE".

27 Front Wing Strake Reference Volume (RV-FW-STRAKE)

RV-FW-STRAKE is composed of the following elements:

27.1 An axis-aligned cuboid, which has one interior diagonal defined by the points:

a. [X_F = −1125, 450, 75], [X_F = −375, 555, 200].

27.2 Once the volume in §27.1 is fully defined, it must be trimmed using the plane defined in §21.1 with all material forward of the plane discarded.

The fully defined volume in §27.2 is "RV-FW-STRAKE".

28 Front Wing Sensor Reference Volume (RV-FW-SENSOR)

RV-FW-SENSOR is composed of the following elements:

28.1 An axis-aligned cuboid, which has one interior diagonal defined by the points:

a. [0, 0, 0], [60, 15, 50].

28.2 A cylinder of diameter 30mm centred on the X-Aligned axis [Y, Z] = [7.5, 50], extruded between X = 0, to X = 60.

28.3 Once the volumes in §28.1 and §28.2 are fully defined, they must be united to create a single unified volume.

The fully defined volume in §28.3 is "RV-FW-SENSOR".

29 Camera 2 Reference Volume (RV-CAMERA-2)

RV-CAMERA-2 is composed of the following elements:

29.1 An axis-aligned cuboid, which has one interior diagonal defined by the points:

[X_F = −150, 0, 325], [X_F = −450, −330, 550].

29.2 Once the volume in §29.1 is fully defined, it must be trimmed with the following planes:

a. a plane passing through the following three points with all material above the plane discarded:

i. [X_F = −1250, 0, 220], [X_A, 0, 550], [X_A, −200, 550].

b. a plane passing through the following three points with all material inboard of the plane discarded:

i. [X_F = −1250, −85, 0], [X_A, −135, 0], [X_A, −135, 200].

The fully defined volume in §29.2 is "RV-CAMERA-2".

30 Rear Wing Profiles Reference Volume (RV-RW-PROFILES)

RV-RW-PROFILES is composed of the following elements:

30.1 An axis-aligned cuboid, which has one interior diagonal defined by the points:

a. [X_R = 165, 0, ~~725~~ 745], [X_R = 630, 575, 880].

30.2 Once the volume in §30.1 is fully defined, it must be trimmed with a plane passing through the following three points with all material below the plane discarded.

a. [X_R = 165, 150, ~~725~~ 745], [X_R = 165, 575, 785], [X_R = 630, 575, 785].

The fully defined volume in §30.2 is "RV-RW-PROFILES".

31 Rear Wing Endplate Reference Volume (RV-RWEP-BODY)

RV-RWEP-BODY is composed of the following elements:

31.1 On a plane through X_R = 150, a simple, closed polygon whose edges pass through the following [Y, Z] vertices sequentially:

a. [345, 250], [345, 425], [535, 700], [535, 880], [575, 880], [575, 675], [375, 375], [375, 250], [345, 250].

31.2 Once the surface in §31.1 is fully defined, it must be extruded along X to X_R = 750.

31.3 Once the volume in §31.2 is fully defined, it must be trimmed with the following planes:

a. A plane passing through the following points [X_R, Y, Z], with all material forward of the plane discarded:

i. [160, 575, 700], [375, 575, 250], [375, 375, 250].

b. A plane passing through the following points [X_R, Y, Z], with all material rearward of the plane discarded:

i. [750, 575, 625], [625, 575, 250], [625, 375, 250].

c. A plane passing through following points [X_R, Y, Z], with all material below the plane discarded:

i. [450, 425, 250], [750, 425, 325], [750, 400, 325].

The fully defined volume in §31.3 is "RV-RWEP-BODY".

32 Rear Wing Pylon Reference Volume (RV-RW-PYLON)

RV-RW-PYLON is composed of the following elements:

2027

32.1 On a plane through Y = 50, a simple, closed polygon whose edges pass through the following [X, Z] vertices sequentially:

a. [X_R, 300], [X_R, 450], [X_R = 200, 825], [X_R = 450, 825], [X_{DIF} = 400, 300], [X_R, 300].

32.2 Once the surface in §32.1 is fully defined, it must be extruded along Y to Y = 110.

The fully defined volume in §32.2 is "RV-RW-PYLON".

33 Rear Wing SM Fairing Reference Volume (RV-RW-SM-FAIRING)

RV-RW-SM-FAIRING is composed of the following elements:

33.1 An axis-aligned cuboid, which has one interior diagonal defined by the points:

[X_R = 165, 0, ~~725~~ 745], [X_R = 630, 25, ~~1000~~ 970].

33.2 Once the volume in §33.1 is fully defined, it must be trimmed with a plane passing through the following three points with all material above the plane discarded.

a. [X_R = 450, 0, ~~1000~~ 970], [X_R = 450, 25, ~~1000~~ 970], [X_R = 630, 0, 880].

The fully defined volume in §33.2 is **"RV-RW-SM-FAIRING".**

34 Floor Bib Stay Reference Volume (RV-BIB-STAY)

RV-BIB-STAY is composed of the following elements:

34.1 On a plane through Y = 0, a simple, closed polygon whose edges pass through the following [X, Z] vertices sequentially:

a. [X_F = 625, 275], [X_F = 725, 0], [X_F = 825, 0], [X_F = 825, 275], [X_F = 625, 275].

34.2 Once the surface in §34.1 is fully defined, it must be extruded along Y to Y = 35.

The fully defined volume in §34.2 is "RV-BIB-STAY".

35 Stay / Bracket / Support / Fairing Reference Volumes

Each individual Stay, Bracket, Support or Fairing Volume is composed of the elements listed, by row, in the following table.

In each row, the fully defined Reference Volume is an axis-aligned cuboid, which has one interior diagonal defined by the listed points.

Reference Volumes with multiple pairs of points are comprised of multiple cuboids. Each individual cuboid must first be defined sequentially by the respective pair of points and all cuboids combined to form the single Reference Volume.

35.	Name	Code (RV-)	Point 1 [X, Y, Z]	Point 2 [X, Y, Z]
1	Hanger	**"HANGER"**	[0, 0, 0]	[60, 10, 70]
2	Floor Sphere	**"FLOOR-SPHERE"**	[X_R = −350, 365, 55]	[X_R = −330, 385, 65]
3	Floor Fence	**"FLOOR-FENCE"**	[X_R = −315, 170, 25]	[X_R = 135, 310, 225]
4	Floor Board Brace	**"FLOOR-BRACE"**	[X_F = 650, 200, 70]	[X_F = 800, 890, 450]

©2026 Fédération Internationale de l'Automobile

35.	Name	Code (RV-)	Point 1 [X, Y, Z]	Point 2 [X, Y, Z]
5	Roll Hoop	**"ROLL-HOOP"**	[X_C = 0, 0, 680]	[X_C = 320, 170, 970]
6	Mirror Inner Stay	**"MIRROR-ISTAY"**	a) [X_C = −830, 175, 600] b) [X_C = −830, 175, 570]	a) [X_C = −730, 500, 665] b) [X_C = −730, 260, 600]
7	Mirror Rear Stay	**"MIRROR-RSTAY"**	[X_C = −765, 500, 450]	[X_C = −450, 630, 700]
8	Tailpipe Bracket	**"TAILPIPE-BRACKET"**	[0, 0, 0]	[30, 25, 80]
9	Front Wing Pylon	**"FW-PYLON"**	[X_F = −1200, 50, 60]	[X_F = −950, 150, 275]
10	Front Wing Adjuster	**"FW-ADJUSTER"**	[0, 0, 0]	[60, 25, 85]
11	Front Wing SM CL Fairing	**"FW-SM-CL-FAIRING"**	[X_F = −1025, 0, 60]	[X_F = −700, 25, 300]
12	Front Wing SM Mid	**"FW-SM-MID"**	[X_F = -1150, 200, 70]	[X_F = -700, 400, 300]
13	Front Wing SM Linkage	**"FW-SM-LINKAGE"**	[0, 0, 0]	[25, 25, 200]
14	Rear Wing Brace	**"RW-BRACE"**	[X_R = 375, 0, 310]	[X_R= 625, 375, 350]
15	Rear Wing Separator	**"RW-SEPARATOR"**	[0, 0, 0]	[30, 10, 30]
~~16~~	~~Rear Wing SM Fairing~~	~~**"RW-SM-FAIRING"**~~	~~[X_R = 165, 0, 725]~~	~~[X_R = 630, 25, 1000]~~
16	Rear Wing Bracket	**"RW-BRACKET"**	[0, 0, 0]	[60, 30, 30]
17	Slip Sensor	**"SLIP"**	[X_F = 50, 0, 120]	[X_F = ~~450~~ 750, 25, 280]
~~18~~	~~Bib Stay~~	~~**"BIB-STAY"**~~	~~[XF = 425, 0, 0]~~	~~[XF = 625, 35, 275]~~
18	Rear Wing Notch	**"RW-NOTCH"**	[X_R = 580, 0, 830]	[X_R = 630, 50, 880]
19	Floor Tyre IR Sensor	**"FLOOR-TYRE-IR"**	[0, 0, 0]	[80, 80, 40]

36 Reference Surfaces

Each individual Reference Surface is composed of the elements listed, by row, in the following table.

Each fully defined Reference Surface is a simple, closed polygon, that lies exactly on the listed plane, with edges that pass through the listed vertices sequentially.

36.	Name	Code (RS-)	Plane	Ref.	Vertices
1	Floor Foot	**"FLOOR-FOOT"**	Z = 50	[X_F, Y]	[675, 700], [675, 800], [750, 850], [1225, 725], [1225, 650], [675, 700]
2	Sidewall	**"FLOOR-SIDEWALL"**	Y = 325	[X_R, Z]	[−75, 40], [−75, 115], [150, 145], [300, 210], [300, 95], [50, 40], [−75, 40]
3	Floor Body	**"FLOOR-BODY"**	Z = 450	[X, Y]	[X_F = ~~450~~ 750, 0], [X_F = ~~450~~ 750, ~~50~~ 135], [X_F = 1150, 250], [X_F = 1150, 730], [X_R = −360, 680], [X_R = −360, 350], [X_R = 290, 350], [X_R = 290, 0], [X_F = ~~450~~ 750, 0]
4	Floor Reference	**"FLOOR-REF"**	Z = 300	[X, Y]	[X_F = ~~450~~ 750, 0], [X_F = ~~450~~ 750, ~~50~~ 120], [X_F = 1080, 200], [X_F = 1400, 310], [X_R = −1100, 310], [X_R = −800,

©2026 Fédération Internationale de l'Automobile

36.	Name	Code (RS-)	Plane	Ref.	Vertices
					260], [X_R = −545, 200], [X_R = −545, 70], [X_R = −345, 50], [X_R = −345, 0], [X_F = ~~450~~ 750, 0]
5	Floor Step	**"FLOOR-STEP"**	Z = 300	[X, Y]	[X_F = 1250, 340], [X_F = 1400, 390], [X_R = −1050, 390], [X_R = −775, 350], [X_R = −625, 300], [X_R = −500, 475], [X_R = -500, 575], [X_R = -825, 620], [X_F = 1250, 690], [X_F = 1250, 340]
6	Floor Board	**"FLOOR-BOARD"**	Y = 600	[X_F, Z]	[675, 325], [1050, 325], [1300, 160], [1300, 90], [675, 90], [675, 325]
7	Nose	**"NOSE"**	Z = 0	[X, Y]	[X_F = −1200, 0], [X_F = −1175, 100], [X_C = −2030, 134], [X_C = −1330, 190], [X_C = −1330, 0], [X_F = −1200, 0]
8	Engine Cover	**"EC"**	Y = 0	[X, Z]	[X_R = −53, 50], [X_R = −53, 570], [X_R = -75, 575], [X_R = -150, 815], [X_R = -475, 850], [X_R = -1000, 955], [X_C = 320, 967], [X_C = 320, 50], [X_R = −53, 50]
9	Bodywork Aperture	**"BW-APERTURE"**	Z = 350	[X, Y]	[X_F = 1400, 380], [X_R = −800, 80], [X_R = −800, 400], [X_R = −1650, 600], [X_F = 1400, 600], [X_F = 1400, 380]
10	Front Wing Profiles	**"FW-PROFILES"**	Z = 0	[X_F, Y]	[−1225, 0], [−1000, 675], [−700, 675], [−850, 0], [−1225, 0]
11	Front Wing Endplate Top	**"FWEP-TOP"**	Z = 0	[X_F, Y]	[−875, 895], [-425, 895], [-425, 670], [−1000, 670], [−875, 895]
12	Front Wing Endplate Side	**"FWEP-SIDE"**	Y = 700	[X_F, Z]	[−950, 80], [−975, 175], [-625, 350], [−475, 350], [−460, 225], [−400, 80], [−950, 80]
13	Rear Wing Endplate	**"RWEP"**	Y = 0	[X_R, Z]	[250, 870], [740, 870], [625, 310], [375, 310], [165, 700], [165, 800], [250, 870]
14	ERS Protection Surface	**"PU-ERS"**	Y=280	[X, Z]	[X_C = −365, 50], [X_C = −365, 170], [X_C = −70, 380], [X_{PU} = −100, 380], [X_{PU} = −100, 50], [X_C = −365, 50]
15	Front Deflector Top Edge	**"FWH-TOP"**	Y_W = -20	[X_W, Z_W]	[150, -160], [335, -160], [335, -110], [250, -140], [150, -140], [150, -160]

37 Forward Intrusion Laminate Reference Surface (RS-INTSN-LAM-FWD)

RS-INTSN-LAM-FWD is composed of the following elements:

37.1 On the plane Y=0, a profile of two lines passing through the following points [X_C, Z];

a. [−740, 0], [−875, 235], [−875, 650].

37.2 Once the profile in §37.1 is fully defined, it must be extruded in Y to Y = 500.

The fully defined surface in §37.2 is "RS-INTSN-LAM-FWD".

38 Rearward Intrusion Laminate Reference Surface (RS-INTSN-LAM-RWD)

RS-INTSN-LAM-RWD is composed of the following elements:

38.1 On the plane Y=0, a profile of two lines passing through the following points [X, Z];

a. [X_C = 0, 550], [X_{PU} = −75, 450], [X_{PU} = −75, 100].

38.2 Once the profile in §38.1 is fully defined, it must be extruded in Y to Y = 500.

The fully defined surface in §38.2 is "RS-INTSN-LAM-RWD".

APPENDIX C3: DRAWINGS

Drawing 1 Crankshaft Mass

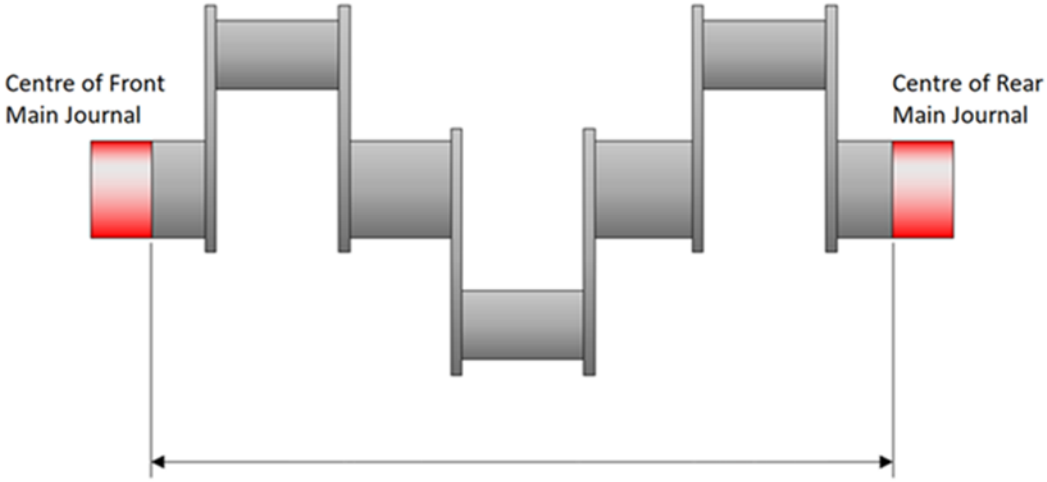

Mass definition is assembly mass between the centre position of the front and rear main bearing journals (includes counterweights, bolts, bungs, O-rings, etc.)

Drawing 2 Camera and Transponder Locations

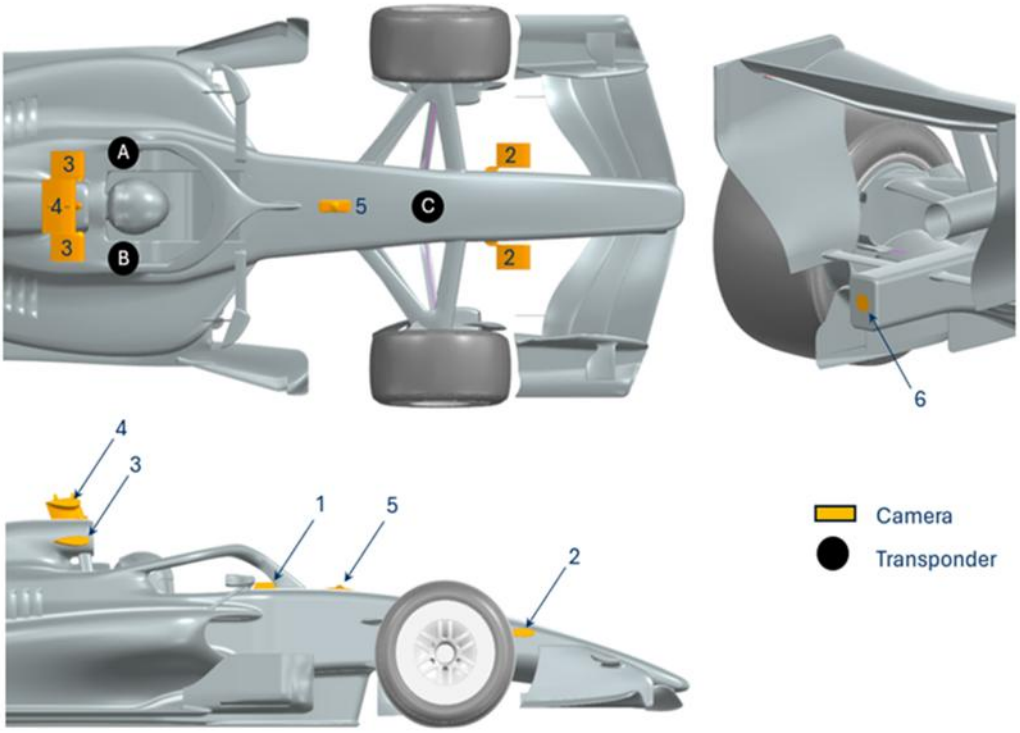

Drawing 3 Cockpit Cross Section Template

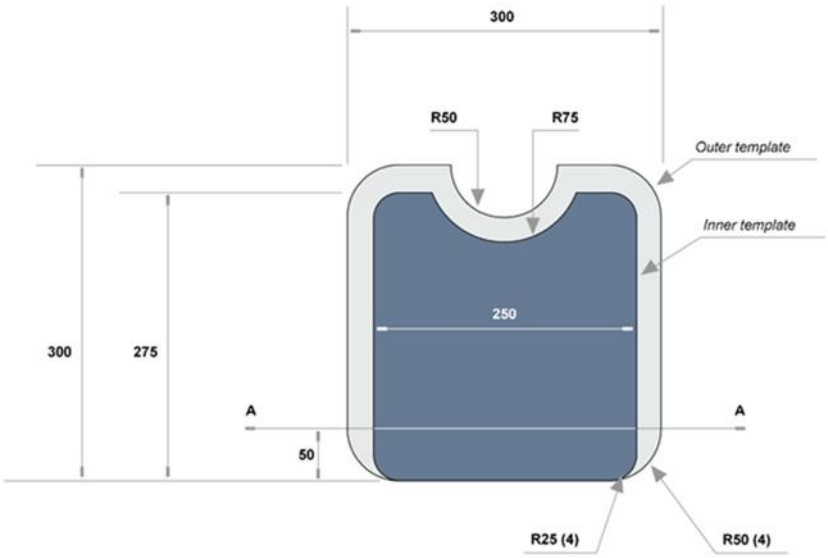

See Article 13.3.1 & Article 14.6.7

Drawing 4 Turbocharger Compressor and Turbine key Dimensions (Article C5.3.5)

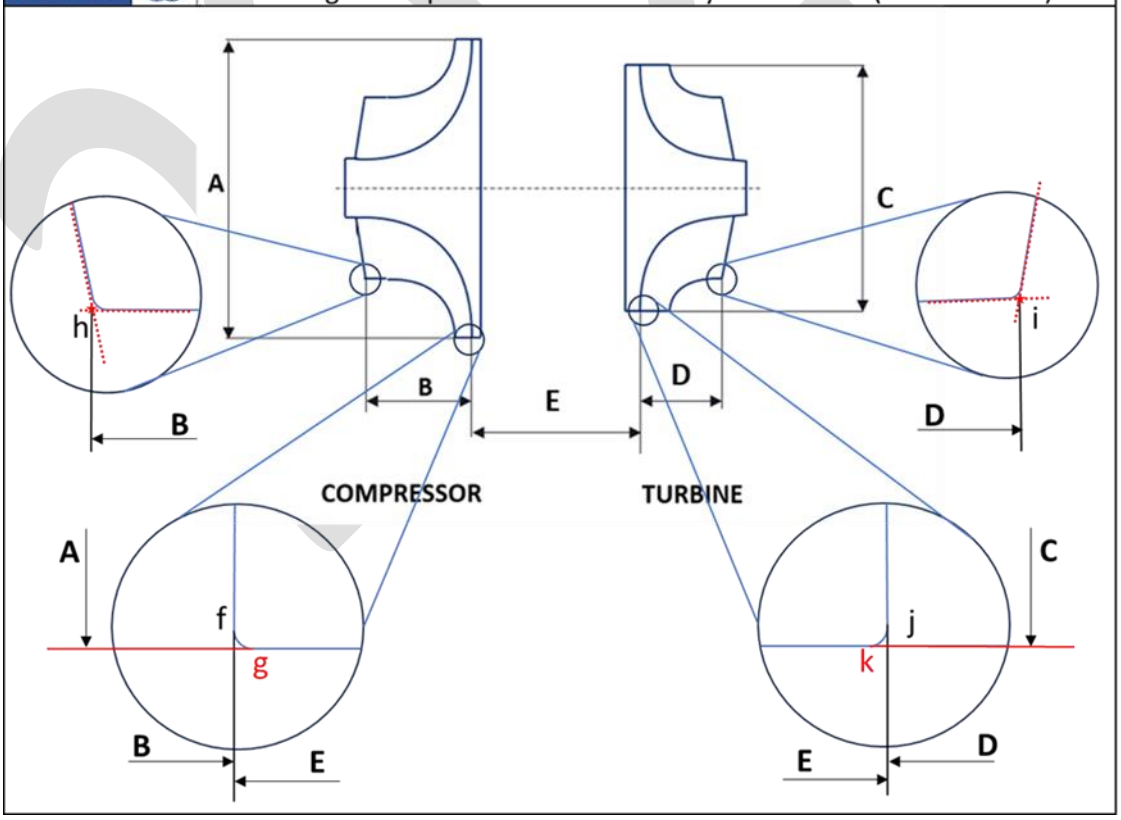

©2026 Fédération Internationale de l'Automobile

Drawing 5 Cylinder key planes and dimensions

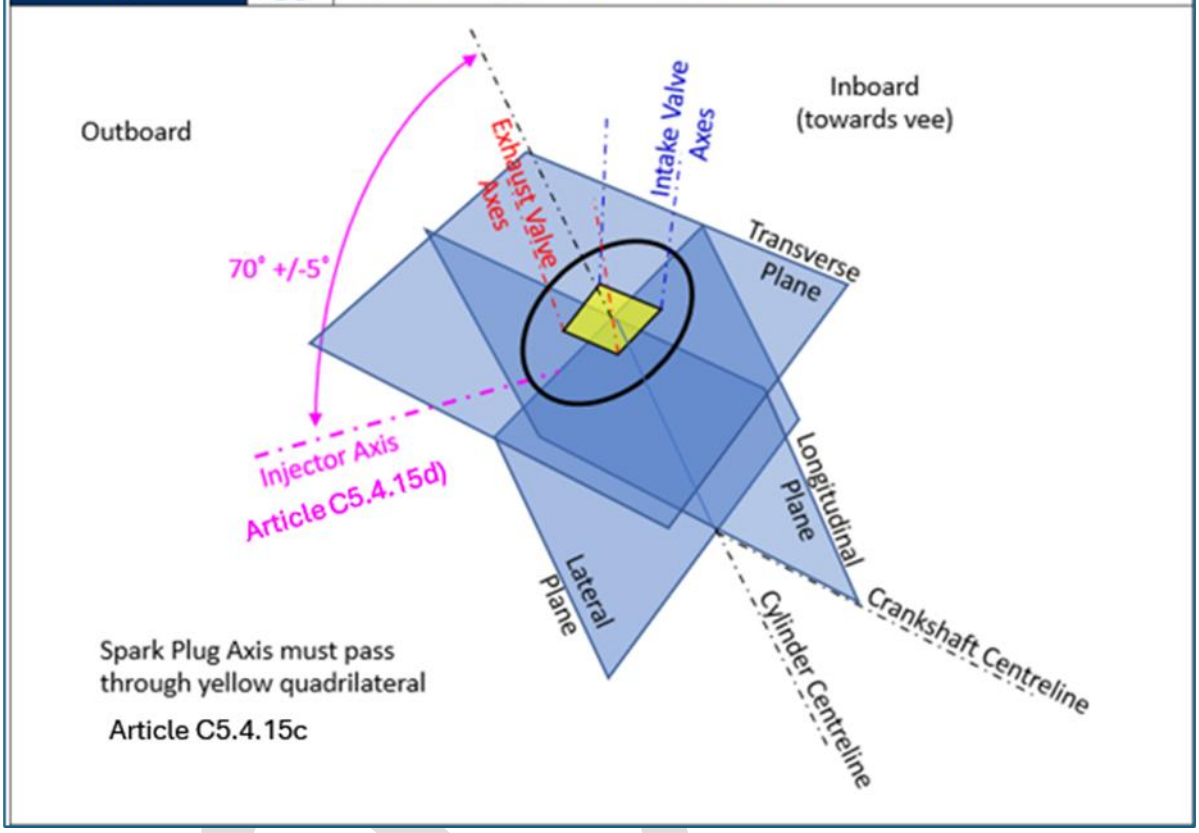

Drawing 6 Top deck and deck height definition

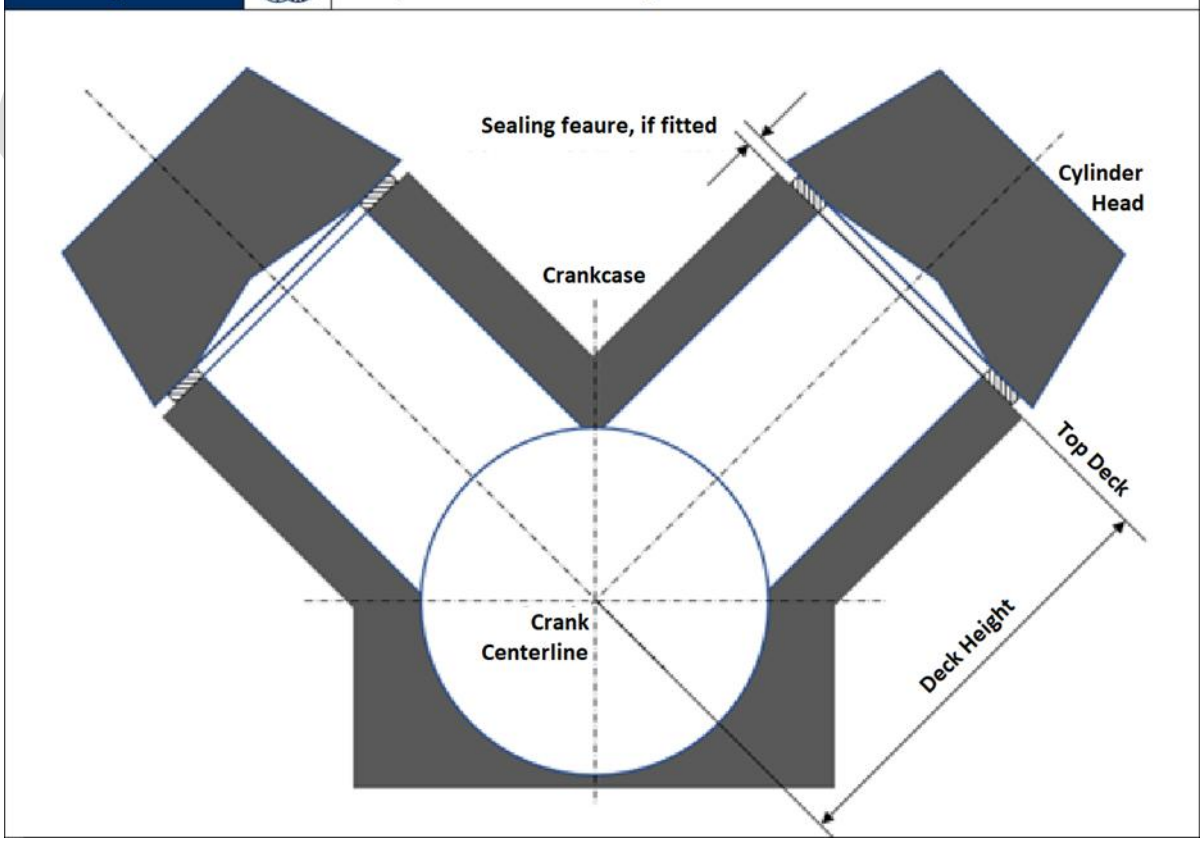

©2026 Fédération Internationale de l'Automobile

Drawing 7 Bearing Dimension Definitions (Articles C5.4.6, C5.4.7)

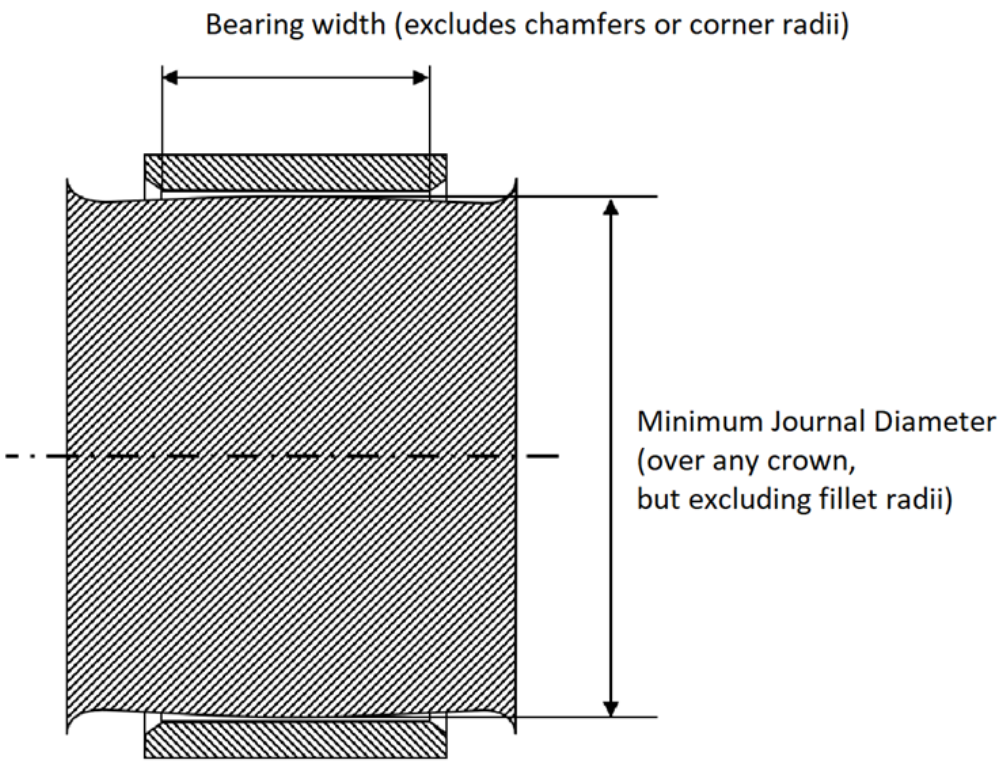

Drawing 8 Additive Manufacture in the Exhaust Assembly (Article C15.8.7)

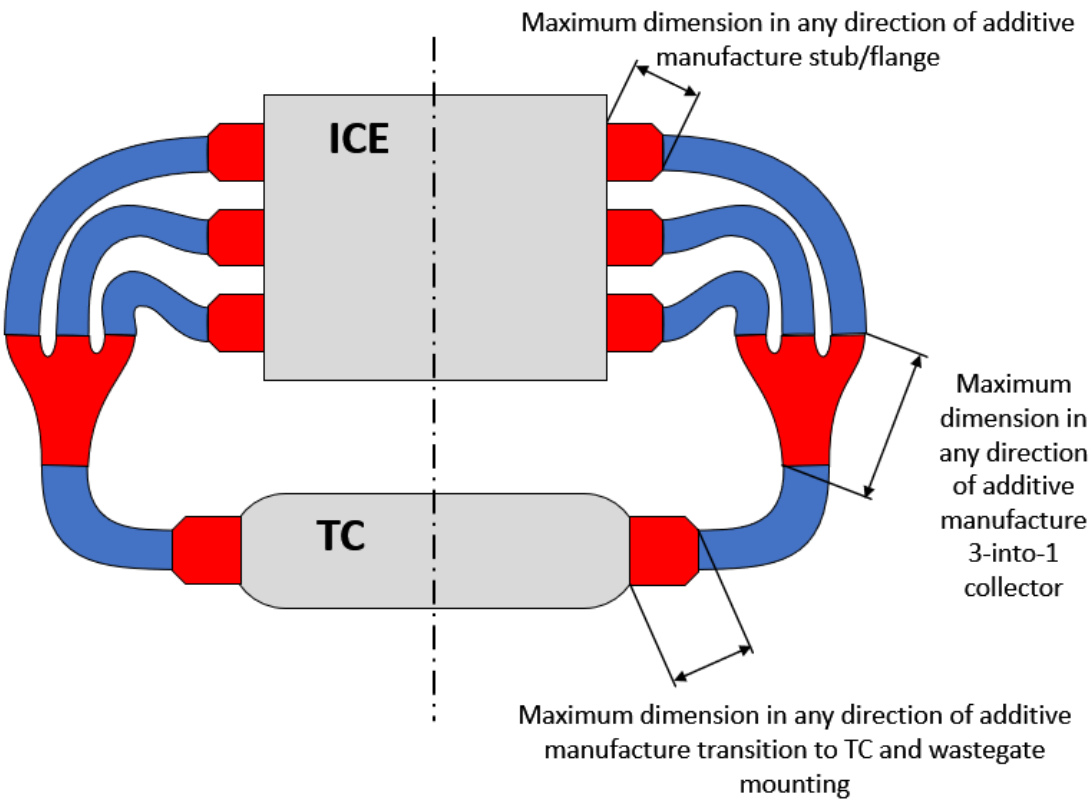

©2026 Fédération Internationale de l'Automobile

Drawing 9 2026 PU ELEMENT MINIMUM MASS LIMITS (for reference only)

ESME	MGUK	MGU-K Mechanical Trans-mission	ICE	TC	Powerbox
			No individual mass limit	Min **12kg**	No individual mass limit
Min **35kg**	Min **16kg**	Assumed **4kg**	Min ICE+TC+Powerbox **130kg**		

2026 PU MASS ALLOWANCES AS WEIGHED										
		ESME Min Mass as weighed		MGUK Min Mass as weighed		Not weighed		ICE Min Mass as weighed		TOTAL PU MINIMUM MASS
Drive in MGUK	>	35kg	>	20kg	>	-	>	130kg	>	185kg
Drive Split	>	35kg	>	18kg	>	-	>	132kg	>	185kg
Drive in ICE	>	35kg	>	16kg	>	-	>	134kg	>	185kg

Drawing 10 Survival Cell Emergency indicators

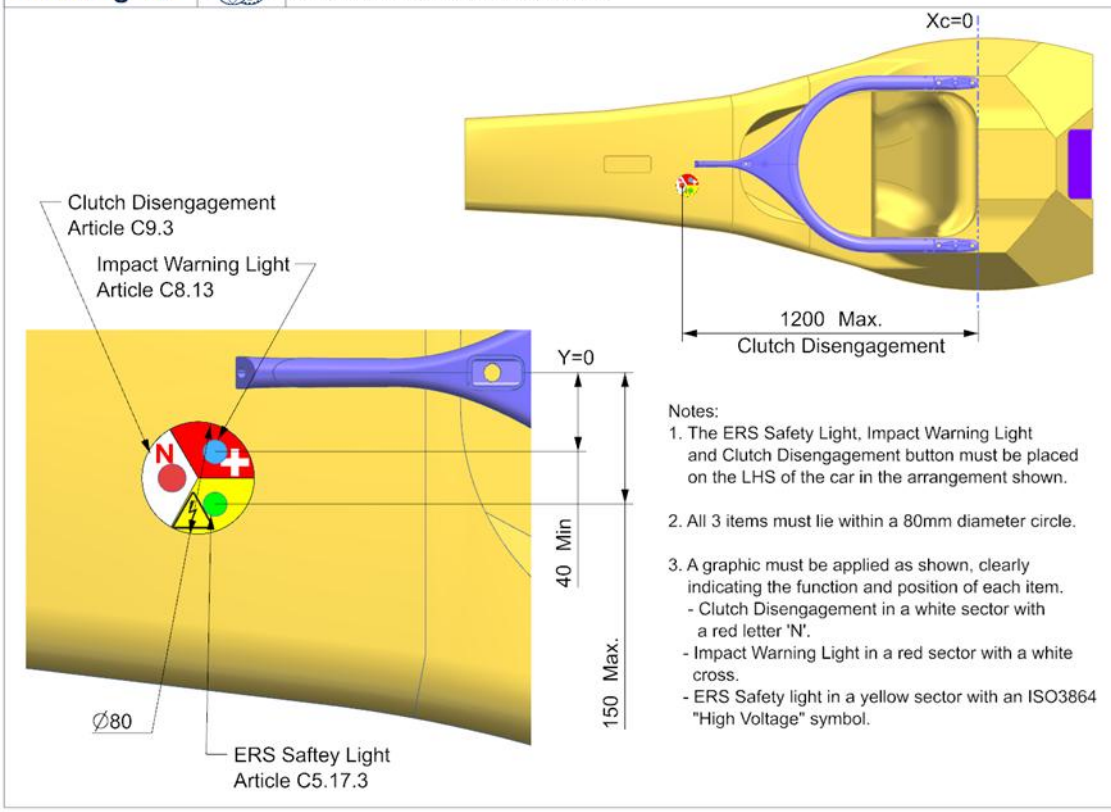

Notes:
1. The ERS Safety Light, Impact Warning Light and Clutch Disengagement button must be placed on the LHS of the car in the arrangement shown.
2. All 3 items must lie within a 80mm diameter circle.
3. A graphic must be applied as shown, clearly indicating the function and position of each item.
   - Clutch Disengagement in a white sector with a red letter 'N'.
   - Impact Warning Light in a red sector with a white cross.
   - ERS Safety light in a yellow sector with an ISO3864 "High Voltage" symbol.

©2026 Fédération Internationale de l'Automobile

APPENDIX C4: POWER UNIT SYSTEMS, FUNCTIONS, COMPONENTS AND SUPPLY PERIMETER

Advisory Committee: PUAC

Governance: PU Manufacturers' Governance Agreement / WMSC

Table 1: 'Power Unit Components' below provides all category allocations and specific permissible upgrade schedule for every part of the PU.

Column 1 provides a description of the general area of the PU for the rows bracketed by the description and is for reference only.

Column 2, 'Item No' provides a sequential item number for ease of navigation within the table and is for reference only.

Column 3, '**List of PU functions/systems/components'** provides a description of the functions, systems and components in enough detail to place any aspect of the PU into one of the columns. The understanding of what each of the elements listed refers to will be taken as that which is widely understood unless there are specific definitions elsewhere in the regulations. For these items, the definition will take precedence.

Column 4, 'PU Element' identifies which of the PU elements (ICE, TC, EXH, MGU-K, ES or PU-CE) the item belongs to. If the item does not belong to any of these elements, then 'EXC' is shown in the column.

Column 5, 'Sealed Perimeter' differentiates those items included in a PU element sealed perimeter ('INC') and those items excluded from a PU element sealed perimeter ('EXC').

The parts listed as 'INC' are included within the PU element shown in Column 4. Treatment of these items is defined in Article B8.2.

The parts listed as 'EXC' are not part of a PU element. Treatment of these items is defined in defined in Article B8.2.

Column 6, 'Supply Perimeter' differentiates those items included in the PU supply within Power Unit Maximum Supply Price described in Appendix A6 Article 1.4.

Column 7, 'Reference Volume' identifies which of the four PU Reference Volumes (RV-PU-; ICE, OT, TC or ERS) defined in Appendix C2 the item belongs to. If the item does not belong to any of these four elements, the 'EXC' is shown in the column.

Column 8, 'PU Mass Group' identifies which of the four PU Mass Groups (ICE, TC, MGU-K or ESME) the item belongs to. The minimum masses of the mass groups are defined in Articles C5.5.1, C5.3.4, C5.18.7 and ~~C5.17.9~~ C5.17.8 respectively. If the item does not belong to any of these four elements, the 'EXC' is shown in the column. For reference, Drawing 9 summarises all masses involved.

Columns 9-14, Upgrade Schedule (Homologation Status)' is described in Appendix C4.

Columns 9-13 show which season the upgrades described in Appendix C4, Article 3 are permitted. A tick in a green cell indicates that the item may be upgraded for that season while a cross in a red cell indicates the item may not be upgraded in that season and must be carried over from the previous season – both subject to the provisions described in Appendix C4, Article 3.

©2026 Fédération Internationale de l'Automobile

Column 14 refers to items that may be upgraded as described in Appendix 4, Article 4 – Additional Development and Upgrade Opportunities. A tick in a green cell indicates that the item may be upgraded if the PU Manufacturer is granted ADUO status. A cross in a red cell indicates that no upgrade is permitted even if the PU Manufacturer is granted ADUO status.

Column 15, ‘Component Classification**’** identifies which classification of components the item belongs to.

PU component classifications are described in Article C18 and any item so regulated will be shown as one of the four PU component classifications (LPUC, SSPUC, OSPUC or DSPUC).

For those items associated with a car, the table will show ‘App C6’ referring to Appendix C6

Column 16, ‘PU-ANC’ identifies Power Unit ancillary components which are included in the sealed perimeter and which are subject to the provisions of Article B8.2.

Under the scope of this Appendix, all Minor Parts must be considered as belonging to the main component to which they are attached. As such, they benefit from the same category allocations in the table below except for the sealed perimeter from which they are excluded. It is accepted that such parts can cross the boundaries between 2 reference volumes when they create a link between components belonging to these 2 volumes.

2027

Table 1: Power Unit Components Table 1: Power Unit Components

PU Area	Item No	List of PU functions/ systems/ components	PU ELEMENT	SEALED PERIMETER	SUPPLY PERIMETER	REFERENCE VOLUME	PU MASS GROUP	UPGRADE SCHEDULE (HOMOLOGATION STATUS)						COMPONENT CLASSIFICATION	PU-ANC
								2026	2027	2028	2029	2030	ADUO		
ICE ASSEMBLY	1	Main ICE assembly comprising crankcase, cylinder heads (except combustion chamber and ports and injector port machining), crankshaft, camshaft (excluding camshaft lobe profiles), cam drive, cam covers, front and rear covers, valves, finger followers, Internal gear drives, any part which provides a structural connection between the Survival Cell and the gearbox case through the ICE mounting studs.	ICE	INC	INC	ICE	ICE	✓	✗	✓	✗	✗	✓	LPUC	
	2	ICE-mounted water pumps, ICE oil pumps, ICE oil scavenge pumps, any air/oil separator Non-hydraulic actuators (to allow PU to function), ICE-mounted air valve compressors.	ICE	INC	INC	ICE	ICE	✓	✗	✓	✗	✗	✓	LPUC	YES
	3	Flywheel	ICE	EXC	INC	ICE	ICE	✓	✓	✓	✓	✓	✓	LPUC	
	4	Main ICE assembly comprising combustion chamber surface and pre-chamber detail within cylinder heads, piston, connecting rod, camshaft lobe profiles, intake and exhaust ports, injector port machining, valvegear air spring sub-assemblies.	ICE	INC	INC	ICE	ICE	✓	✓	✓	✓	✗	✓	LPUC	
	5	ICE intake air system components including Trumpets, Throttle system, Plenum.	ICE	INC	INC	ICE	ICE	✓	✓	✓	✓	✗	✓	LPUC	YES
	6	ICE intake air system components, downstream of those included in item 57 and other than those included in item 5	ICE	INC	INC	EXC	ICE	✓	✓	✓	✓	✗	✓	LPUC	YES

©2026 Fédération Internationale de l'Automobile

PU Area	Item No	List of PU functions/ systems/ components	PU ELEMENT	SEALED PERIMETER	SUPPLY PERIMETER	REFERENCE VOLUME	PU MASS GROUP	UPGRADE SCHEDULE (HOMOLOGATION STATUS)						COMPONENT CLASSIFICATION	PU-ANC
								2026	2027	2028	2029	2030	ADUO		
	7	PU mounted fuel system components downstream of the High Pressure Fuel Pump: (e.g., high pressure fuel hoses, fuel rails)	ICE	INC	INC	ICE	ICE	✓	✗	✓	✗	✗	✓	LPUC	YES
	8	High Pressure Fuel Pump	ICE	INC	INC	ICE	ICE	✓	✗	✗	✗	✗	✗	SSPUC	YES
	9	ICE Fluid Filters (Oil,Fuel), oil pump PRV mechanism	ICE	EXC	INC	ICE	ICE	✓	✗	✓	✗	✗	✓	LPUC	
	10	Fuel Injectors	ICE	INC	INC	ICE	ICE	✓	✗	✗	✗	✗	✗	SSPUC	YES
	11	Fuel Injector spray pattern tuning feature	ICE	INC	INC	ICE	ICE	✓	✓	✓	✓	✗	✓	LPUC	
	12	Knock Sensors	ICE	EXC	INC	ICE	ICE	✓	✗	✗	✗	✗	✗	SSPUC	
	13	Spark Plugs	ICE	EXC	INC	ICE	ICE	✓	✓	✓	✓	✗	✓	LPUC	
EXHAUST	14	Engine Exhaust System (including thermal insulation, excluding fasteners and seals)	EXH	INC	INC	ICE	ICE	✓	✓	✓	✓	✗	✓	LPUC	
	15	Exhaust fasteners and seals	EXH	EXC	INC	ICE	ICE	✓	✓	✓	✓	✗	✓	LPUC	
TURBO	16	Turbo Charger - Includes Compressor and Turbine Wheels, Shaft, Bearings, Centre, Compressor and Turbine Housings, Inlet VG Device, compressor inlet	TC	INC	INC	TC	TC and ICE	✓	✓	✓	✓	✗	✓	LPUC	
	17	Turbo Charger mounted electrical components (e.g. wiring looms, non-regulatory sensors)	TC	EXC	INC	TC	TC and ICE	✓	✓	✓	✓	✗	✓	LPUC	
WG / POP-OFF	18	Wastegate or similar	EXH	INC	INC	ICE	ICE	✓	✓	✓	✓	✗	✓	LPUC	YES
	19	Pop-Off Valve or similar	ICE	INC	INC	ICE	ICE	✓	✓	✓	✓	✗	✓	LPUC	YES
PU ELECTRICAL	20	ICE or EXH-mounted electrical components (e.g. wiring looms within legality volume, non-regulatory-sensors, actuators)	ICE	EXC	INC	ICE	ICE	✓	✓	✓	✓	✗	✓	LPUC	
	21	Clutch shaft regulatory torque sensor	EXC	EXC	EXC	EXC	EXC							App C6 [3F]	
	22	PU-mounted regulatory temperature and pressure sensors	ICE or TC or MGU-K	EXC	INC	Linked to PU Element	Linked to PU Element	✓	✗	✗	✗	✗	✗	SSPUC	

©2026 Fédération Internationale de l'Automobile

PU Area	Item No	List of PU functions/ systems/ components	PU ELEMENT	SEALED PERIMETER	SUPPLY PERIMETER	REFERENCE VOLUME	PU MASS GROUP	UPGRADE SCHEDULE (HOMOLOGATION STATUS)						COMPONENT CLASSIFICATION	PU-ANC
								2026	2027	2028	2029	2030	ADUO		
			or EXH or ES												
	23	Other regulatory PU sensors	EXC	EXC	EXC	EXC	EXC	✓	✗	✓	✗	✗	✗	SSPUC	
	24	Ignition Coils	ICE	EXC	INC	ICE	ICE	✓	✓	✓	✓	✗	✓	DSPUC	
	25	FIA Standard ECU.	EXC	EXC	EXC	EXC	EXC							App C6 [11S]	
ERS - MGU-K	26	MGU-K excluding mechanical power transmission components	MGU-K	INC	INC	ERS	MGU-K	✓	✗	✓	✗	✓	✓	LPUC	
	27	ICE mounted MGU-K mechanical power transmission components, housing assembly and mounting accessories	ICE	INC	INC	ICE and/or ERS	ICE	✓	✗	✓	✗	✓	✓	LPUC	
	28	MGU-K mounted MGU-K mechanical power transmission components, housing assembly and mounting accessories	MGU-K	INC	INC	ICE and/or ERS	MGU-K	✓	✗	✓	✗	✓	✓	LPUC	
	29	MGU-K regulatory Torque sensor: Field sensor assembly	MGU-K	EXC	INC	ICE and/or ERS	MGU-K or ICE	✓	✗	✓	✗	✓	✗	SSPUC	
	30	MGU-K torque sensor signal conditioning module (SCM)	MGU-K	EXC	INC	EXC	MGU-K or ICE or ESME	✓	✗	✗	✗	✗	✗	SSPUC	
	31	The MGU-K torque sensor shaft, mounting accessories and the mechanical connection elements between K and ICE, if applicable.	ICE and/or MGU-K	EXC	INC	ICE and/ or ERS	MGU-K or ICE	✓	✗	✓	✗	✓	✓	LPUC	
	32	ERS-K phase conductors, associated interfaces and mounting accessories. MGU-K terminal box	MGU-K	EXC	INC	ERS	MGU-K	✓	✗	✓	✗	✓	✓	LPUC	
	33	MGU-K electrical components fitted outside of sealed perimeter of item 26 (e.g. wiring looms, non-regulatory sensors)	MGU-K	EXC	INC	ERS	MGU-K	✓	✗	✓	✗	✓	✓	LPUC	
ERS - ES	34	ES Main Enclosure (ESME)	ES	INC	INC	ERS	ESME	✓	✗	✓	✗	✓	✓	LPUC	

©2026 Fédération Internationale de l'Automobile

PU Area	Item No	List of PU functions/ systems/ components	PU ELEMENT	SEALED PERIMETER	SUPPLY PERIMETER	REFERENCE VOLUME	PU MASS GROUP	UPGRADE SCHEDULE (HOMOLOGATION STATUS)						COMPONENT CLASSIFICATION	PU-ANC
								2026	2027	2028	2029	2030	ADUO		
	35	Energy Store	ES	INC	INC	ERS	ESME	✓	✗	✓	✗	✓	✓	LPUC	
	36	Regulatory DC sensors and Insulation monitoring device	ES	EXC	INC	ERS	ESME	✓	✗	✗	✗	✗	✗	SSPUC	
	37	Safety devices (Fuses, Contactors, MSD, relays)	ES	EXC	INC	ERS	ESME	✓	✗	✓	✗	✓	✓	LPUC	
	38	Busbars, connectors conductors, looms or any other component fitted inside the ESME that is not explicitly mentioned in any other rows of this table.	ES	EXC	INC	ERS	ESME	✓	✗	✓	✗	✓	✓	LPUC	
PU-CE	39	CU-K	PU-CE	INC	INC	ERS	ESME	✓	✗	✓	✗	✓	✓	LPUC	
PU-CE	40	DC-DC Unit	PU-CE	INC	INC	ERS	ESME	✓	✗	✓	✗	✓	✓	LPUC	
PU-CE	41	Powerbox (ignition, injection, High Pressure Fuel Pump driver)	PU-CE	EXC	INC	EXC	ICE	✓	✗	✗	✗	✗	✗	SSPUC	
PU-CE	42	General electrical devices inside the ESME, including Power distribution board, Driver for PU electric pumps, LV fuse box and any electronic box exclusively used for PU functionalities.	PU-CE	INC	INC	ERS	ESME	✓	✗	✓	✗	✓	✓	LPUC	
PU-CE	43	General electrical devices outside or on the ESME, including Power distribution board, Driver for PU electric pumps, LV fuse box and any electronic box exclusively used for PU functionalities.	PU-CE	INC	INC	EXC	ICE or ESME	✓	✗	✓	✗	✓	✓	LPUC	
PU-CE	44	Source of energy independent of the ES exclusively used for PU functionalities	ICE or PU-CE	EXC	INC	EXC	ICE or ESME	✓	✗	✓	✗	✓	✓	LPUC	
OIL TANK	45	Main PU oil tank	ICE	INC	INC	OT	ICE	✓	✓	✓	✗	✗	✓	LPUC	YES
OIL TANK	46	Oil level sensor	ICE	EXC	INC	OT	ICE	✓	✓	✓	✗	✗	✓	SSPUC	

©2026 Fédération Internationale de l'Automobile

PU Area	Item No	List of PU functions/ systems/ components	PU ELEMENT	SEALED PERIMETER	SUPPLY PERIMETER	REFERENCE VOLUME	PU MASS GROUP	UPGRADE SCHEDULE (HOMOLOGATION STATUS)						COMPONENT CLASSIFICATION	PU-ANC
								2026	2027	2028	2029	2030	ADUO		
	47	Catch tanks, any breather system connected to the PU	ICE	INC	INC	OT and ICE	ICE	✓	✓	✓	✗	✗	✓	LPUC	YES
FUEL SYSTEM	48	Fuel cell including fuel bag, internal baffles/foam, fixings	EXC	EXC	EXC	EXC	EXC							App C6 [6C]	
	49	Lift pump(s) and filter(s)	EXC	EXC	EXC	EXC	EXC							App C6 [6B]	
	50	Collector including any NRVs, pressure sensors, level sensors, fill/drain ports, PRVs, running bleeds, filters, FIA sample tube	EXC	EXC	EXC	EXC	EXC							App C6 [6A]	
	51	Primer pump(s)	EXC	EXC	EXC	EXC	EXC							App C6 [6B]	
	52	Pressure and temperature sensors at inlet and outlet of FFM and at inlet of High Pressure Fuel Pump	EXC	EXC	EXC	EXC	EXC							App C6 [6F]	
	53	FFM (regulatory fuel flow meter)	EXC	EXC	EXC	EXC	EXC							App C6 [10B]	
	54	Breakaway valves and any filters	EXC	EXC	EXC	EXC	EXC							App C6 [6E]	
ICE COOLERS	55	Secondary heat exchangers for water and oil plus any associated accessories, header tanks, connections to the ICE, tubes, pipes, hoses, and fixings	EXC	EXC	EXC	EXC	EXC							App C6 [9D]	
	56	Primary heat exchangers for water, oil and any associated accessories, header tanks, connections to the ICE, tubes, pipes, hoses, and fixings	EXC	EXC	EXC	EXC	EXC							App C6 [9C]	
	57	ICE intake air heat exchangers and their associated accessories (including but not limited to housings, supports, brackets, fasteners, tubes from compressor outlet to heat exchanger, and a maximum of 2 simple and smooth bore outlet tubes	EXC	EXC	EXC	EXC	EXC							App C6 [9D]	

©2026 Fédération Internationale de l'Automobile

PU Area	Item No	List of PU functions/ systems/ components	PU ELEMENT	SEALED PERIMETER	SUPPLY PERIMETER	REFERENCE VOLUME	PU MASS GROUP	UPGRADE SCHEDULE (HOMOLOGATION STATUS)						COMPONENT CLASSIFICATION	PU-ANC
								2026	2027	2028	2029	2030	ADUO		
		for intake air lines if these are upstream of any component listed in item 5 and item 6)													
ERS COOLING	58	ICE-mounted ERS cooling system including pumps, associated motors, actuators	PU-CE	INC	INC	ICE and/ or ERS	ICE	✓	✗	✓	✗	✓	✓	LPUC	YES
	59	Non ICE-mounted ERS cooling system including pumps, associated motors, actuators	PU-CE	INC	INC	ICE and/ or ERS	ESME	✓	✗	✓	✗	✓	✓	LPUC	YES
	60	Primary and Secondary heat exchangers for ERS cooling fluid plus any associated accessories, header tanks, tubes, pipes, hoses, and fixings connecting to items 34, 58, 59	EXC	EXC	EXC	EXC	EXC							App C6 [9D]	
	61	ICE-mounted ERS cooling system filters	PU-CE	EXC	INC	ICE	ICE	✓	✓	✓	✓	✓	✓	LPUC	
CLUTCH	62	Clutch and clutch actuation system between the PU and the gearbox	EXC	EXC	EXC	EXC	EXC							App C6 [3D]	
HYDRAULICS	63	ICE-mounted hydraulic pump including associated brackets, fixings, tubes and hoses	EXC	EXC	EXC	EXC	EXC							App C6 [7A]	
	64	Hydraulic system servo valve(s), manifold and hoses for PU control.	ICE	INC	INC	EXC	ICE	✓	✓	✓	✓	✗	✓	LPUC	YES
	65	Hydraulic system actuator(s) for PU control	ICE	INC	INC	ICE	ICE	✓	✗	✓	✗	✗	✓	LPUC	YES
	66	Hydraulic system (e.g., accumulators, manifolds, servo-valves, solenoids, actuators, hoses) other than components included in items 64 and 65.	EXC	EXC	EXC	EXC	EXC							App C6 [7A, 7B or 7C]	
	67	ICE-mounted hydraulic circuit filters	ICE	EXC	INC	EXC	ICE	✓	✓	✓	✓	✓	✓	LPUC	
INSTALLATION AND	68	Fuel feed pumps delivering less than 10 barG and their associated accessories (included but not limited to tubes,	EXC	EXC	EXC	EXC	EXC							App C6 [6B]	

©2026 Fédération Internationale de l'Automobile

PU Area	Item No	List of PU functions/ systems/ components	PU ELEMENT	SEALED PERIMETER	SUPPLY PERIMETER	REFERENCE VOLUME	PU MASS GROUP	UPGRADE SCHEDULE (HOMOLOGATION STATUS)						COMPONENT CLASSIFICATION	PU-ANC
								2026	2027	2028	2029	2030	ADUO		
		hoses, supports, brackets, and fasteners).													
	69	Heat Shields and associated mounting hardware.	EXC	EXC	EXC	EXC	EXC							App C6 [10J]	
	70	PU air valve regulators	ICE	EXC	INC	EXC	ICE	✓	✓	✓	✓	✓	✓	LPUC	
	71	Any ancillary equipment associated with the PU air valve system excluding regulators (e.g., pneumatic bottles, hoses, filling valves).	ICE	EXC	INC	EXC	ICE	✓	✓	✓	✓	✓	✓	LPUC	
	72	Intake upstream of compressor inlet/VG Intake device up to and including the air filter.	EXC	EXC	EXC	EXC	EXC							App C6 [10H]	
	73	Exhaust beyond turbine exit and WG exit and associated brackets, support, screws, nuts, dowels, washers, or cables.	EXC	EXC	EXC	EXC	EXC							App C6 [10F]	
	74	Any breather system ducting between the PU and the orifice referenced in C5.1.10	EXC	EXC	EXC	EXC	EXC							App C6 [10K]	
	75	Wiring harnesses attached to the PU which are not ordinarily part of a power unit (car looms)	EXC	EXC	EXC	EXC	EXC							App C6 [11B]	
	76	Studs used to mount PU to the Survival Cell or gearbox.	EXC	EXC	EXC	EXC	EXC							App C6 [10D]	
	77	Boost pressure measurement devices	ICE	EXC	INC	EXC	EXC	✓	✗	✗	✗	✗	✗	SSPUC	
	78	Lambda Sensor(s)	EXH	EXC	INC	EXC	EXC	✓	✓	✓	✓	✗	✓	DSPUC	
FLUIDS	79	Fuel	EXC	EXC	EXC	EXC	EXC	✓	✓	✓	✓	✗	✓		
	80	Engine oil	EXC	EXC	EXC	EXC	EXC	✓	✓	✓	✓	✗	✓		
	81	Hydraulic fluid	EXC	EXC	EXC	EXC	EXC	✓	✓	✓	✓	✓	✓		
	82	Engine Coolant	EXC	EXC	EXC	EXC	EXC	✓	✓	✓	✓	✓	✓		
	83	ERS Fluid	EXC	EXC	EXC	EXC	EXC	✓	✓	✓	✓	✓	✓		

©2026 Fédération Internationale de l'Automobile

PU Area	Item No	List of PU functions/ systems/ components	PU ELEMENT	SEALED PERIMETER	SUPPLY PERIMETER	REFERENCE VOLUME	PU MASS GROUP	UPGRADE SCHEDULE (HOMOLOGATION STATUS)						COMPONENT CLASSIFICATION	PU-ANC
								2026	2027	2028	2029	2030	ADUO		
BALLAST	84	ICE Ballast (subject to Article C4.4)	ICE	INC	INC	ICE	ICE	✓	✓	✓	✓	✓	✓	LPUC	

Table 2: 'Additional Power Unit matters affecting the Supply Perimeter' below relates to additional *PU* functions, systems and components not included within the PU component definition defined in Table 1 and classifies them as included in or excluded from the Supply Perimeter.

Column 1 provides a description of the general area of the PU – in this case Operational matters and is for reference only.

Column 2, 'Item No' provides a continuation of the sequential item number from Table 1 for ease of navigation within the table and is for reference only.

Column 3, '**List of PU functions/systems/components'** provides a description of the functions, systems and components in enough detail to differentiate what is included in or excluded from the Supply Perimeter.

place any aspect of the PU supply described into one of the columns. The understanding of what each of the elements listed refers to will be taken as that which is widely understood unless there are specific definitions elsewhere in the regulations. For these items, the definition will take precedence.

Column 4, 'Supply Perimeter' differentiates those items included in the PU supply within Power Unit Maximum Supply Price described in Appendix A6 Article 1.4. 'INC' is included in the Supply Perimeter and 'EXC' is excluded from the Supply Perimeter.

Table 2: Additional Power Unit matters affecting the Supply Perimeter

By default, what is not listed here is to be treated as EXC, where such items listed are EXC these are non-exhaustive examples and are added only for additional clarity of reading.

	Item No	List of PU functions/ systems/components	SUPPLY PERIMETER
Operational	85	Power Units and spare Power Unit elements, ancillaries and components necessary for use by the F1 Team during: i. All Competitions in the Championship. Minimum number of PU elements, and ancillaries and components per F1 team to be (number of each per driver per season according to Section B of the F1 Regulations) x 2 ii. Testing of Current Cars (TCC) in accordance with Section B of the F1 Regulations iii. DE with a Current Car and PE with a Current Car. A maximum of 5000 km per calendar year will be INC within the PUSP for the activities detailed in 85.ii, 85.iii of the table.	INC
	86	Additional PUs or PU elements, ancillaries and components required to replace units out of service due to accident damage or other cause induced by team will be outside the supply perimeter and will incur additional charges.	EXC
	87	All costs that meet limb a. of the definition of Power Unit Transportation Costs as defined within the FIA F1 Regulations – Section E [Financial Regulations - Power Unit Manufacturers].	EXC
	88	Provision of trackside support activities relating to the operation of Power Units by the F1 Team during any Competition and Testing of Current Cars (TCC) undertaken by up to a maximum of 8 people physically present at each Event.	INC
	89	Provision of remote support for Power Unit Activities, related to the operation of Power Units by the F1 Team, during any Competition and Testing of Current Cars (TCC).	INC
	90	Provision of trackside support activities by personnel physically present at the event related to the operation of Power Units by the F1 Team during Events other than Competitions and TCC.	EXC
	91	Travel, accommodation, and reasonable expenses for support personnel	EXC
	92	Quantity of fuel and oil and other products (i.e hydraulic fluids, cooling fluids...), specified by the PU Manufacturer, necessary for use by the team during Competitions, Tests or Events.	EXC
	93	Garage equipment defined as compulsory by Manufacturer (including but not limited to tool sets required for PU trackside support activities, dielectric fluid desorber system, ES offboard (dis)charger). All equipment required to support the activities related to the operation of Power Units not being part of the item #94.	INC
	94	Garage IT equipment, data connection to factory, servers, telemetry, radio, team clothing and all garage equipment identified by the Power Unit manufacturer as not strictly necessary for the operation of the Power Unit	EXC
	95	PUTB activities undertaken for the Sole Purpose Of Testing Power Units For Performance And Reliability pursuant to the Operational Regulations. Note that for PUTB activities pursuant to Article F.5.3.2.c. of the Operational Regulations this applies only and exclusively in respect of the bill of materials cost of the Power Unit components installed and being tested.	INC

©2026 Fédération Internationale de l'Automobile

	Item No	List of PU functions/ systems/components	SUPPLY PERIMETER
	96	PUTB activities that are not for the Sole Purpose Of Testing Power Units For Performance And Reliability pursuant to the Operational Regulations. Note that for PUTB Activities pursuant to Article F.5.3.2.c. of the Operational Regulations this applies to all types of costs incurred in the undertaking of the PUTB activity other than the bill of materials cost of the Power Unit components installed and being tested.	EXC

2027

APPENDIX C5: HOMOLOGATION AND DEVELOPMENT OF POWER UNITS, FUEL AND OIL FOR 2026-2030

Advisory Committee: PUAC

Governance: PU Manufacturers' Governance Agreement / WMSC

1 Homologation dossier

1.1 Any PU Manufacturer registered in accordance with the procedures set out in Article 1 of Appendix A7 to supply Power Units for use by one or more F1 Teams in the 2026 to 2030 Championships must submit to the FIA a Power Unit homologation dossier before 1 March of the first year in which it intends to supply such power unit for use during the Championship period indicated. Each PU Manufacturer shall be permitted to present only one homologation dossier with respect to the period and the homologation granted will be valid until the end of the 2030 Championship.

1.2 The homologation dossier must:

a. include details of all the parts described as "ICE", "PU-CE", "EXH", "TC", "ES" and "MGU-K" in the "PU ELEMENT" column of Appendix C4.

b. include a detailed list of all Minor Parts associated with all PU Elements. This list must be approved by the FIA.

c. include all documents required in Article 1 of this Appendix.

d. be submitted and updated according to the procedure detailed in the document FIA-F1-DOC-047.

1.3 A Power Unit will be homologated for an F1 Team once a complete homologation dossier has been submitted by the relevant PU Manufacturer and has been approved by the FIA, such approval to take place within 14 days from the submission of the homologation dossier.

1.4 Each PU Manufacturer must submit one homologation dossier which applies to all F1 Teams it intends to supply. Only the fuel specification, the engine oil specification, and parts which have undergone a minimal incidental modification in accordance with the provisions of paragraph 3.5 below may differ between F1 Teams. In this event they must be declared separately in the dedicated sections of the homologation dossier.

All Power Units supplied by a single PU Manufacturer must also be operated in the same way, they must therefore be:

a. Identical according to the dossier for each F1 Team.

b. Run with identical software for PU control and capable of being operated in precisely the same way.

c. Run with identical specifications of engine oil and fuel, and associated software calibrations, unless an alternative supplier is preferred by a Customer Team.

1.5 PU Manufacturers carrying out modifications to the homologated Power Unit under the provisions of Article 3 of this Appendix must submit to the FIA an updated homologation dossier at least 14 days before the first introduction of the requested modifications in a Competition. The homologation dossier thus submitted:

a. Will not constitute a new dossier but will instead be considered as updates to the initial dossier

©2026 Fédération Internationale de l'Automobile

b. Must have a clear indication of version number, and all the new changes appropriately highlighted.

c. Must include details of any components that have been dual-sourced. The CAD models and 2D drawings, material and mass for such components must be the same. Subject to FIA approval, only minimal tolerance differences will be permitted to accommodate manufacturing process variations and must be highlighted on the drawings supplied. Dual sourcing is only permitted for supply-chain and/or cost purposes.

1.6 For PU elements relevant to the upgrade schedule defined in the Appendix C4 Table 2 columns 9 to 13 (ADUO excluded) which parts are listed in the document FIA-F1-DOC-047, preliminary dossiers must be submitted during the year preceding the year of introduction according to the following dates:

a. before the 21st of March, the ERS Preliminary Dossier including the details justifying all the points mentioned in the article C5.2.14. This will be pre-homologated by the FIA. Any further modification following this pre-homologation must also be submitted to the FIA.

b. before the 1st of November, the Preliminary Dossier for specific parts of the entire Power Unit.

1.7 Each PU Manufacturer must present a complete reference Power Unit, including all Power Unit elements, for sealing before 1 April of the year in which it first submitted a homologation dossier. This Power Unit must fully align with the content of the submitted homologation dossier and must be approved by the FIA. Once sealed, the reference Power Unit may be updated during the homologation period to reflect any changes made in accordance with the provisions of Article 3 of this Appendix and approved by the FIA. Update of this Power Unit (parts concerned, timing) must be approved by the FIA.

2 Information provided by the PU Manufacturer to their customer F1 Teams

Any PU Manufacturer intending to supply a Power Unit to an F1 Team during a Championship (year N) must:

a. Declare to the FIA, before 1 August of year N-1, that they provided to their customer F1 Teams:

i. An initial full external space model of the Power Unit including details and locations of all physical interfaces required by the team to install the Power Unit.

ii. Preliminary estimates of important operating parameters such as heat rejection, fuel mass and density, clutch shaft stiffness and engine stiffness.

b. Declare to the FIA, before 1 November of year N-1, that they provided to their customer F1 Teams:

i. A final full external space model of the Power Unit including details and locations of all physical interfaces required by the team to install the Power Unit.

ii. Firm predictions of important operating parameters such as heat rejection, fuel mass and density, clutch shaft stiffness and engine stiffness.

iii. Initial details of any other parts, procedures, operating conditions and limits or any other information required by the team to install and operate the Power Unit as intended.

After the 1 August of year N-1, any significant change compared to previous communication, must be notified to the customer F1 Teams in due time. Should a Customer Team consider that the change has an unreasonable impact on the Power Unit installation in the car, they may contact the FIA within 7 days of the notification. The FIA will then contact the relevant PU Manufacturer and its customer F1 Teams in order to conduct its investigation. If the FIA is satisfied, in its absolute discretion, that these changes are acceptable, the FIA will confirm to the PU Manufacturer and the customer F1 Teams within 14 days that they may be carried out.

3 Permitted upgrades for the Power Unit

3.1 Following the first homologation of a Power Unit by a PU Manufacturer in the period 2026-2030, upgrades to Power Unit components may only be carried out if they are specifically covered by the provisions of this Article 3.

3.2 For the years 2027, 2028, 2029 and 2030, upgrades to the components marked with a "✓" in the table of Appendix C4, in the relevant column for each year, may be carried out. Irrespective of changes permitted under ADUO according to Article 3.3 of this Appendix, such upgrades must be introduced for the first Competition of the year when they are allowed and used for the whole Championship season.

3.3 PU Manufacturers who fulfil the criteria described by Article 4 of this Appendix in year N, will be permitted additional specification upgrades in year N and N+1

Each ADUO homologation upgrade:

a. must only contain components marked with a "✓" in the column "ADUO" in the table of Appendix C4

b. will require the submission of an updated homologation dossier as specified in the Article 1.5 of this Appendix

A Power Unit updated to the latest ADUO homologation upgrade specified above:

a. must only contain parts belonging to that updated homologation dossier.

b. can be introduced from the first Competition following the ADUO grant, in addition to any other specification upgrade otherwise permitted.

c. is available to each F1 Team supplied by the PU Manufacturer at the Competition at which it is first introduced with at least one Power Unit of the new Homologation specification.

3.4 Components may be modified in order to comply with an amendment to the published regulations or issued FIA guidance. Such modifications must be first approved by the FIA.

3.5 Minimal incidental changes may be carried out for car installation purposes to the following components of the Power Unit, subject to the approval process outlined in paragraph a. of Article 3.10 of this Appendix:

a. Wirings

b. Exhaust system, provided the key defining parameters of the system (diameters, lengths, etc.) remain fundamentally unchanged

©2026 Fédération Internationale de l'Automobile

c. Turbo-compressor position (within 20mm from the original position in relation to the ICE), turbo clocking, turbo supports

d. Position of the wastegates with housings and pipes

e. Position of the pop-off valves with housings and pipes

f. Engine intake air system as defined in item 6 of Appendix C4, provided the key defining parameters of the system (diameters, lengths, etc.) remain fundamentally unchanged

g. All parts listed in item 71 (e.g., pneumatic bottles, hoses, filling valves) and hydraulic system hoses for PU control listed in item 64 of Appendix C4

3.6 Modifications may be made to Power Unit components for the sole purposes of reliability, safety, cost saving, or supply issues, subject to the approval process outlined in Article 3.10.a of this Appendix.

3.7 Minor modifications may be made to Power Unit components subject to the approval process outlined in Article 3.10.a of this Appendix. Such modifications may be (but are not limited to) due to different branding, a change of supplier, a change of part number, etc. and may have no or very limited effect on reliability or functionality.

3.8 Requests for repair of a Power Unit component in the form of a patch made of the same material or of a composite material, following damage or failure, may be accepted if it is only local and minimal. If accepted, such repair can be applied on a temporary basis to all components available. If the repair is made of a different material, such a repair must not be present on the components used during the following Championship season.

3.9 Changes of fuel and oil suppliers will be accepted, provided such changes are intended for commercial and not for performance reasons.

3.10 The following additional constraints apply to the permitted modifications discussed in this Article 3:

a. To carry out modifications under the provisions of Articles 3.5, 3.6 and 3.7 of this Appendix, PU Manufacturers must apply in writing to the FIA Technical Department and must provide all necessary supporting information including, where appropriate, clear evidence of failures. The FIA will circulate the correspondence to all Power Unit Manufacturers for comment. If the FIA is satisfied, in its absolute discretion, that these changes are acceptable, they will confirm to the Power Unit Manufacturer concerned that they may be carried out.

   Wherever practical, such requests must be submitted at least 14 days before the requested date of homologation.

   The procedure and associated document templates that must be used by the Power Unit Manufacturers for their requests are available in the document FIA-F1-DOC-047.

b. Any permitted modifications concerning parts that are inside the sealed perimeter (i.e. parts described as “INC” in the “Sealed Perimeter” column of Appendix C4) can only be applied to new Power Unit elements.

c. With reference to the FIA F1 Regulations - Section B [Sporting], if a Power Unit Element is subsequently replaced by another of a different specification between the Sprint Qualifying

©2026 Fédération Internationale de l’Automobile

Session and the Sprint Session or between the Qualifying Session and the Race, the replacement Power Unit part will be considered the same in design and similar in mass, inertia and function if any differences it contains are limited to components modified under the provisions of Articles 3.6, 3.7 and 3.8 of this Appendix.

d. A Customer Team may refuse or request a delay of a Power Unit modified under the provisions of Articles 3.3, 3.6 and 3.7 of this Appendix if such modifications cause installation issues in their car. In such cases, the Customer Team must apply in writing to the FIA Technical Department and must provide all necessary supporting information. If the FIA is satisfied, in its absolute discretion, that the installation issues are genuine, they will confirm approval to the Customer Team and to the PU Manufacturer. In this case, the provisions of (e) below won't apply.

e. The first time one or more Power Units comprising modified parts, as permitted by Articles 3.3 and Article 3.6 of this Appendix, are used in any of the cars powered by the Power Unit Manufacturer, a minimum of 1 Power Unit with the exact same specification must be available for each F1 Team. Each F1 Team will have priority use of one of these Power Units until the end of the first day of the Competition.

In the case of a Manufacturer supplying Power Units to more than 2 F1 Teams, one exception per Championship season can be granted by the FIA, in its absolute discretion, in the event of genuine supply issues. The request must be made in writing to the FIA Technical Department and must provide all necessary information and evidence of the supply issue. If the FIA is satisfied, the minimum required number of Power Units available for all F1 Teams may be reduced to 2 for the Event where the modified part is used for the first time.

f. Any new Power Unit element used for the first time in a Competition must always include all modifications included in any Power Unit element already used by any of the cars powered by the PU Manufacturer.

g. The requirements of e. and f. don't apply to minor modifications as defined in 3.7.

h. A Power Unit element will be deemed to have been used once the car's timing transponder has shown that it has left the pit lane.

3.11 Minimal incidental changes may be carried out on PU components as a consequence of changes made to another PU component with a different upgrade schedule. Such modifications are subject to the approval process outlined in Article 3.10.a of this Appendix.

4 Additional Development and Upgrade Opportunities

4.1 During the entire season's Competitions of each Championship in the 2026-2030 period, the FIA will monitor the performance of Internal Combustion Engine (ICE) part of all the Power Units supplied by each PU Manufacturer to its customer F1 Teams.

For each ICE supplied by the PU Manufacturers, an ICE Performance Index will be calculated. The methodology to calculate this value can be found in the document FIA-F1-DOC-096.

To support this assessment, PU Manufacturers and F1 Teams may be asked to provide relevant additional information by the FIA, which must be supplied upon reasonable request.

The Performance Index will be compared to the highest Performance Index measured during the assessment period and used to determine whether each PU Manufacturer should be granted ADUO.

PU Manufacturers will be informed of the grant of ADUO following the procedure available in the document FIA-F1-DOC-096.

4.2 ADUO periods

The end of each ADUO period will be defined as set out in the table below:

ADUO Period	Competition rounds
Period 1	1 to 6
Period 2	7 to 12
Period 3	13 to 18

These ADUO periods may be adjusted by the FIA in the event of any significant change to the Competition calendar. In such cases the adjusted ADUO periods will be made available in FIA-F1-DOC-096.

4.3 ADUO Operational and Financial Measures, Eligibility Criteria for Power Unit homologation upgrades

At the end of each of the ADUO periods specified above, every PU Manufacturer granted ADUO may implement further upgrades to their homologated Power Unit (as described in Article 3.3 of this Appendix), extend the usage of their Power Unit Test Benches for Restricted Testing (as described in Article F5.2.7) and must make a downward adjustment for Cost Cap purposes (pursuant to Article 4.1(t) of the Power Unit Financial Regulations).

a. PU Manufacturers whose ICE Performance Index is at least 2% but less than 4% below the best-performing ICE will be eligible for:
    i 1 additional homologation upgrade in season N
    ii 1 additional homologation upgrade in season N+1
b. PU Manufacturers whose ICE Performance Index is at least 4% below the best-performing ICE will be eligible for:
    i 2 additional homologation upgrades in season N
    ii 2 additional homologation upgrades in season N+1

ADUO homologation upgrades are not cumulative within a season and will only be granted following the first occasion that the PU Manufacturer is assessed by the FIA as eligible for ADUO according to the criteria in this Article.

[The proposed 2% threshold and subsequent resolution of the ICE *performance index* will be validated or adjusted after conclusion of the ongoing activities between *PU Manufacturers* and F1 Teams related to the on-track ICE performance measurement]

4.4 Application of ADUO homologations

a. If a PU Manufacturer receives an ADUO grant for one or two ADUO homologation(s) upgrade(s) in season N, only the corresponding number of one or two ADUO homologation(s) is(are) permitted in that season in addition to any ADUO homologation(s) granted in season N-1 and applicable to season N.

b. Any ADUO homologations awarded in season N-1 for use in season N will be in addition to those which may be granted in Season N.

c. Any unused ADUO homologation upgrade awarded in season N for use in season N, if not introduced by the final Competition of the season, are forfeited.

d. PU Manufacturers not granted ADUO following either of the first two ADUO Periods of season N are not eligible for ADUO in the last period of that season (as described in Article 4.2 of this Appendix).

The FIA reserves the right to implement corrective actions, at its sole discretion, should the upgrades implemented under Article 3.3 result in a competitive imbalance. Any such actions will be discussed in good faith with all PU Manufacturers.

5 Conformity with the power unit homologation dossier

All Power Units must be delivered such that the seals required under Article B8.2.9 can be fitted. Both the Power Unit Manufacturer and users of a homologated Power Unit must take whatever steps are required at any time by the FIA Technical Department, in its absolute discretion, to demonstrate that a Power Unit used at a Competition is in conformity with the corresponding Power Unit homologation dossier.

2027

APPENDIX C6: COMPONENTS' CLASSIFICATION AND PERIMETER

Advisory Committee: TAC

Governance: F1 Commission / WMSC

Table 1 - classification, of components for *Formula One cars* and support equipment.

Ref.	Component or Assembly	Art.	Class	System Description, & Boundaries	Included Components (List not exhaustive) & Supply Terms	Excluded Components
1	**Survival Cell Items & Safety Structures**					
1A	Survival Cell and Primary Roll Structure	C12	LTC	The structure that includes the cockpit, takes suspension loads and aerodynamic loads and transfers them from and to the FIS through the FIS fixings and power unit through the engine studs plus the roll structure as defined in 12.4.1.	Bonded component as submitted for homologation.	Any additional bonded components not required for FIA tests, any components fitted for FIA tests that are then subsequently removed
1D	Front Floor Structure	C12.2.7	OSCNT	Front floor assembly	Front floor structure, its mounting brackets, and any device or structure (and their mounting brackets) between the front floor structure and the Survival Cell.	Fairings.
1G	Front Impact structure	C13.6.1	LTC	The structure that takes aerodynamic loads from the front wing and transfers them to the chassis	FIS, hangers, fixings to chassis that are part of the FIS assembly	Fairings, Camera brackets
1H	Rear Impact structure	C13.7.1	TRC	The structure that mounts to the rear of the gearbox behind the differential	Part as bonded to Gearbox Case. Details of flange for Rear Wing Beam attachment, excluding profile details.	Fairings, external bolted components
1K	Pedals		OSC	Pedal Assembly	Brake pedal assembly including pushrod connecting to the brake master cylinders(s), throttle Pedal including throttle damper, heel–rest, mounting brackets and local electrical and electronic components	Fixings to the Survival Cell.

©2026 Fédération Internationale de l'Automobile

Ref.	Component or Assembly	Art.	Class	System Description, & Boundaries	Included Components (List not exhaustive) & Supply Terms	Excluded Components
1L	Mirror Lens	C12.2.7	OSC	Mirror Lens	Mirror Lens	Backing structures
1M	Side Impact Structures	C13.5	DSC	Upper & Lower SIS Tubes	SIS Tubes Supply to be agreed before 30 June year N−1	Mounting Brackets
1N	Halo	C12.4.2	DSC	Halo, and fixings	Halo, fwd. pin, rwd. bolts. Supply to be agreed before 30 June year N−1	Fwd, mounting bracket, fairings.
2	**Aerodynamic Components**					
2A	Aerodynamic Components, unless otherwise specified	C3	LTC			
2B	Plank assembly	C3.5.9	LTC	Plank assembly as defined in 3.5.9	Plank structure and skids	
2C	Rear wing adjuster (SM)	C3.11.6	OSCNT	SM actuator including linkages	Machined SM Actuators, linkages, local electrical and electronic components	Hoses, any component rigidly attached to the rear wing flap.
2D	Front Wing Adjuster (SM)	C3.10.10	OSCNT	SM actuator including linkages	Machined SM Actuators, linkages, local electrical and electronic components	Hoses, any component rigidly attached to the front wing flap.
2E	Rear Wing		LTC			
2F	Front Wing		LTC			
2G-F	Front Drum		LTC			
2G-R	Rear Drum		LTC			
2H-F	Susp Fairings - Front		LTC			
2H-R	Susp Fairings - Rear		LTC			

©2026 Fédération Internationale de l'Automobile

Ref.	Component or Assembly	Art.	Class	System Description, & Boundaries	Included Components (List not exhaustive) & Supply Terms	Excluded Components
3	**Transmission**					
3A	Gearbox Case	C9.5	TRC	As defined in Article 9.1.5	Gearbox Case, associated fastenings, internal heat shields, internal cooling ducts, Front Cover, Diff Cap, Seals, Fasteners, Cross–shaft Covers	RIS, Inboard suspension components, Engine mountings
3C	Clutch	C9.2	TRC	Rotating clutch assembly and fixings to PU or Gearbox as appropriate.	Clutch basket assembly, Plates, Spring, fixings to PU or Gearbox, Spigot bearing	
3D	Clutch actuation system	C9.2	TRC	Clutch actuator assembly including sensors and cooling shroud and sensors	Clutch Actuator, Actuator support, local electrical and electronic components, Fixings to PU or Gearbox, Cooling Shroud.	Servo Valves
3E	Clutch shaft	C9.2	TRC	Shaft between clutch and gearbox (if PU mounted) or PU (if Gearbox mounted)	Clutch shaft, intermediate support bearing and bracket if required.	Clutch shaft torque sensor
3F	Clutch shaft torque sensor	C9.2	SSC			
3G	Gearbox Internals	C9.5	TRC	All components involved in transmitting torque between the gearbox input shaft and the drive shafts and components essential for the functioning of the gearbox.	Driveline and Gear–change components defined in Appendix C1	Servo valves
3K	Auxiliary Component s (Oil system, reverse gear etc.)	C9.5	TRC	Components that are not included in Driveline or Gear–Change Components but interact directly with these components and are essential for the functioning of the gearbox.	Oil Pressure and Scavenge Pumps, Oil Filter, Oil Tank, Reverse–gear idler & Actuator, Differential Actuator, local electrical and electronic components.	Oil cooler
3L	Drive shaft	C9.10	OSC	The assembly that transfers load from the	Driveshaft, joints, bearings and any	

©2026 Fédération Internationale de l'Automobile

Ref.	Component or Assembly	Art.	Class	System Description, & Boundaries	Included Components (List not exhaustive) & Supply Terms	Excluded Components
				gearbox driveline components to the Axles	required fixings, trigger wheels if present	
4	**Suspension and Steering**					
4A	Inboard Front Suspension	C10.4	TRC	All parts of the front suspension between the connection to the push / pull rod and the Survival Cell.	Rockers, springs, ARB system, damper, bearings, local electrical and electronic components, ride height adjustment, any brackets which are not integral with the Survival Cell. A range of set–up options	
4B	Front Suspension Members	C10.3	TRC	Structural members connecting the upright to the Survival Cell, steering or inboard suspension	Wishbones / Links, Track–rod, Push/pull Rod, Bearings, Inboard Brackets not integrated in the Survival Cell, Fasteners, Wheel Tethers, local electrical and electronic components	Suspension Fairings as defined in 3.14
4C	Front Upright Assembly (Excluding Axles, bearings, nuts & retention system)	C10.6	TRC	Upright assembly between the connection to the suspension members and the wheel bearings	Upright, Brackets – including variants for set–up changes, Fasteners, local electrical and electronic components, Upright Loom.	Any braking system components described in Article 11
4D	Front Axles (Inboard of the contact surface with the wheel spacer) and bearings,		TRC	Axle geometry lying inboard of the contact surface with the wheel spacers and wheel bearing assembly	Axle geometry lying inboard of the contact surface with the wheel spacers, wheel bearings and spacers, interface and mounting to the brake disc bell.	
4E	Front Axles (outboard of the contact surface with the wheel	C10.9	OSC	Axle geometry lying outboard of the contact surface with the wheel spacers, wheel nut and	Axle geometry lying outboard of the contact surface with the wheel spacers, axle nuts, wheel nut,	

©2026 Fédération Internationale de l'Automobile

Ref.	Component or Assembly	Art.	Class	System Description, & Boundaries	Included Components (List not exhaustive) & Supply Terms	Excluded Components
	spacer), nuts & retention system			dual stage mechanism to retain nut if loose	fasteners, and wheel nut retention system.	
4F	Inboard Rear Suspension	C10.4	TRC	All parts of the rear suspension between the connection to the push / pull rod and the Gearbox Case	Rockers, springs, ARB system, dampers, bearings, local electrical and electronic components, ride height adjustment, any brackets which are not integral with the Gearbox Case. A range of set–up options	
4G	Rear Suspension Members	C10.3	TRC	Structural members connecting the upright to the gearbox case or inboard suspension	Wishbones / Links, Track–rod, Push/pull Rod, Bearings, Inboard Brackets not integrated in the Gearbox Case, Fasteners, Wheel Tethers, local electrical and electronic components.	**Suspension Fairings** as defined in 3.14
4H	Rear Upright Assembly (Excluding Axles, bearings, nuts & retention system)	C10.6	TRC	Upright assembly between the connection to the suspension members and the wheel bearings	Upright, Brackets – including variants for set–up changes, Fasteners, local electrical and electronic components.	Any braking system components described in Article 11
4I	Rear Axles (Inboard of the contact surface with the wheel spacer) and bearings,		TRC	Axle geometry lying inboard of the contact surface with the wheel spacers and wheel bearing assembly	Axle geometry lying inboard of the contact surface with the wheel spacers, wheel bearings and spacers, interface and mounting to the brake disc bell,	
4J	Rear Axles (outboard of the contact surface with the wheel spacer),	C10.9	OSC	Axle geometry lying outboard of the contact surface with the wheel spacers, wheel nut and dual stage mechanism to retain nut if loose	Axle geometry lying outboard of the contact surface with the wheel spacers, axle nuts, wheel nut,	

©2026 Fédération Internationale de l'Automobile

Ref.	Component or Assembly	Art.	Class	System Description, & Boundaries	Included Components (List not exhaustive) & Supply Terms	Excluded Components
	nuts & retention system				fasteners, and wheel nut retention system.	
4L	Power Assisted Steering	C10.5.3	TRC	Steering unit from the attachment to the steering column to the clevises for the track rods, connection to the hydraulic system and connection to the electrical loom	Rack assembly, local electrical and electronic components, protective cover, fasteners to Survival Cell, options for varying assistance.	
4M	Steering column	C10.x	OSC	The assembly that transfers load from the steering wheel QD through to the Power Assisted Steering	Forward and Rearward columns, bearings, mounting brackets, attachments to chassis, parts required to pass impact test. local electrical and electronic components.	Fixings to the Survival Cell.
4N	Steering wheel and quick release		OSC	The assembly that transfers load from the driver to the steering column	Steering Wheel, quick release mechanism, gear shift and clutch paddles, local electrical and electronic components, SECU elements integrated in the assembly	Any component that cannot be removed via the operation of the quick release
4P	Wheel rims	C10.7	OSC	Wheel Rim Assembly	Rim, drive pegs, spacers, closing panels, Tyre valve, TPMS sensor mount. Wheel Discs	TPMS sensor
4Q	Tyre pressure sensor (TPMS)		SSC	BF1 TPMS	Mountings	Tyre valve
4R	Tyres	C10.8	SSC			
5	**Brakes**					
5A	Brake disc, disc Bell, and pad assembly	C11	OSC		Structural brake disk bell transferring torque from the axle to the brake disc, brake disk and pads	Any component bolted on the structural disk bell (i.e. deflectors)

Ref.	Component or Assembly	Art.	Class	System Description, & Boundaries	Included Components (List not exhaustive) & Supply Terms	Excluded Components
5B	Brake calipers	C11	OSC		Machined Brake Calipers, pistons, seals, QD's, local electrical and electronic components	Hoses, pipes, and mounting system to the uprights.
5C	Rear brake control system (BBW)	C12	OSC		BBW master cylinder and actuator, servo or solenoid valves, directly mounted local electrical and electronic components master cylinders, balance bar assembly	Hoses and pipes
5D	Brake master cylinder	C12	OSC		Master cylinder(s), push–rods, brake balance system, local electrical and electronic components	Fixings to the Survival Cell.
6	**Fuel System**					
6A	Collector	C6.6.4, C6.6.6	OSC	Collector assembly and pressurisation system if fitted.	Collector assembly including any pressurisation system, any local electrical and electronic components, level sensor, filters, AV mounts and mounting fasteners	Hoses and pipes
6B	Primer pumps, and flexible pipes and hoses	C6.6.2, C6.6.3	SSC	Primer pump(s), and pipes between the primer pump(s) and the breakaway valve.	Primer pump(s), flexible pipes and hoses and their fittings between pump(s) and breakaway valve, fuel flow meter inlet pressure and temperature sensors.	Components classified as part of collector. Components upstream of primer pump(s). Components between primer pump(s) and breakaway valve listed as OSC.
6C	Fuel Bladder	C6.1	LTC			
6D	Fuel system components not listed as OSC or SSC or LTC	C6.2, C6.3, C6.5, C6.6	TRC			Fuel bladder

©2026 Fédération Internationale de l'Automobile

Ref.	Component or Assembly	Art.	Class	System Description, & Boundaries	Included Components (List not exhaustive) & Supply Terms	Excluded Components
6E	Fuel System Hydraulic Layout as described by schematic in article 6.6	C6.6.1, C6.6.3, C6.6.4, C6.6.5, C6.6.6	OSC	Low pressure fuel system from lift pump inlet filters up to and including chassis breakaway valve or optional inlet filter to High Pressure Fuel Pump (if fitted)	Pressure Relief Valves (PRV), Non–Return Valves (NRV), Breakaway Valve, filters, lift pumps, optional damper, rigid pipes and manifolds and their fittings, FIA sample, collector fill/drain port, optional collector pressure sensor, optional running bleed. The section of any component (except for LTCs) within 10mm of the Fuel Flow Meter. Any additional parts which are not shown on the schematic, but which will be deemed to be necessary for the proper behaviour of the hydraulic circuit shown in the schematic, subject to the approval of the FIA Technical Department	Fuel cell pressurisation system. Fuel cell fill/drain, and vent. Primer pump(s), flexible pipes and hoses and their fittings, fuel flow meter and its inlet pressure and temperature sensors
6F	Fuel tank pressure sensor and PRV	C6.1.4 C6.6.4	LTC	The Sensor and PRV specified in 6.1.4 and shown in diagram 6.6.4	Sensor and fittings to fuel bladder. PRV and fittings to fuel bladder	Fuel bladder
7	**Hydraulic System**					
7A	Hydraulic pump and accumulato r		TRC		Hydraulic pump, hydraulic accumulator, local electrical and electronic components, parts required to mount the unit to the PU	
7B	Hydraulic manifold, sensors & control valves		TRC		Hydraulic manifold block, servo valves, solenoid valves, filters, local electrical and electronic components, AV mounts.	

©2026 Fédération Internationale de l'Automobile

Ref.	Component or Assembly	Art.	Class	System Description, & Boundaries	Included Components (List not exhaustive) & Supply Terms	Excluded Components
7C	Pipes between hydraulic pump, hydraulic manifold & gearbox or engine actuators		TRC		Pipes, fittings, QD connectors.	Pipes to/from cooler, pipes to/from actuators not associated with gearbox, PU (BBW, PAS etc).
9	**Oil & Coolant Systems**					
9C	**Primary heat exchangers**	C7.4.1 b	LTC	Heat exchanger assembly as defined in Appendix C1	Welded cooler, electrical and electronic components directly fitted to cooler	Fittings, hoses, pipes, AV mounts
9D	Secondary heat exchangers	C7.4.1 c	TRC	Secondary heat exchanger units as defined in Appendix C1	Heat exchanger unit, directly mounted electrical and electronic components	Ducts feeding cooling air, pipes, hoses, AV mounts.
10	**Power Unit Ancillaries and Sensors**					
10A	ES DC ~~IVF~~ sensor	C5.	SSPUC			
10B	Fuel Flow Meter	C5.9.3	SSC	Prescribed fuel flow meters		Fittings, hoses, pipes, AV mounts
10C	Power Unit Pressure and Temperature sensors	C5.	SSPUC			
10D	Power Unit mountings to gearbox and Survival Cell	C5.4.17	TRC	Studs between PU and Survival Cell and between PU and Gearbox.	Studs, Nuts, Top–hat Bushes, Barrel nuts.	ds integrated into Survival Cell or Gearbox Case
10E	High Pressure Fuel Pump	C5.11.6	SSPUC			
10F	Exhaust System Beyond Turbine and Wastegate Exits	C3.8.2	TRC	Exhaust and wastegate pipes downstream of turbine exit / wastegate exit.	Pipes, clamps	

©2026 Fédération Internationale de l'Automobile

Ref.	Component or Assembly	Art.	Class	System Description, & Boundaries	Included Components (List not exhaustive) & Supply Terms	Excluded Components
10G	Air Filter		FSC			Components inside the Power Unit Supply Perimeter
10H	Compressor Inlet Duct	Apx.C4 Table 1 #72	FSC			Components inside the Power Unit Supply Perimeter
10J	Engine Heat Shields	Apx.C4 Table 1 #69	FSC			Components inside the Power Unit Supply Perimeter
10K	Breather System	Apx.C4 Table 1 #74	LTC	As defined in App.C4		Components inside the Power Unit Supply Perimeter.
10L	Compressor Outlet Duct		FSC	Duct from the outlet of the Compressor Housing to the air inlet of a Secondary Heat Exchanger		Components inside the Power Unit Supply Perimeter. Any duct from Compressor Outlet to a Primary Heat Exchanger
11	**Electrical Systems Hardware**					
11B	Electrical looms		TRC	Looms interfacing the main chassis electrical system with PU systems, transmission systems and other peripheral control or measurement systems.	Main chassis looms, can be made of separate parts, up to and including the connectors to local PU looms, transmission looms or other local looms for peripheral control or measurement systems.	Looms for test installations linked to Article 8.15.1
11C	car to team telemetry	C8.5.1	SSC			
11D	Driver radio	C8.8	SSC			
11E	Accident Data Recorder (ADR)	C8.9.1	SSC			
11F	High speed camera	C8.9.3	SSC			
11G	In-ear accelerometers	C8.9.4	SSC			
11H	Biometric devices	C8.9.5	SSC			

©2026 Fédération Internationale de l'Automobile

Ref.	Component or Assembly	Art.	Class	System Description, & Boundaries	Included Components (List not exhaustive) & Supply Terms	Excluded Components
11J	Marshalling system	C8.11	SSC			
11K	Timing Transponders	C8.15	SSC			
11L	TV Cameras	C8.16	SSC			
11S	Standard Electronic Control Unit (SECU)		SSC			
11T	SECU FIA applications		SSC			
11U	SECU Team applications		LTC			
12	**Safety Equipment**					
12B	Rear lights	C14.3	SSC			Local electrical looms
12C	Driver Cooling System	C14.6	OSC	Driver cooling system up to the connector to the driver's personal equipment.	All components declared under Article 4.6.b.ii	Driver's personal equipment. Pipe runs between sub-assemblies.
13	**Miscellaneous Components**					
14	**Pitstop Equipment**					
14A	Wheel Guns		FSC	The impact wrenches used to remove and fasten wheels during a pit stop. Either pneumatically, or electrically powered	Guns, Air lines (between gun and gantry for pneumatic), Batteries (if electrical), signalling lights, signal cables, calibration jig, Heatshields (for protecting guns in extreme weather conditions)	
14B	Front Jack		FSC	The jack used to lift the front of the car.	Jack, signalling lights, signal cables.	Cradle shaped to any LTC component.
14C	Rear Jack		FSC	The jack used to lift the rear of the car.	Jack, signalling lights, signal cables.	Cradle shaped to any LTC component.
14D	Side Jack		FSC	Jack inserted from the side in unusual situations	Jack	
14E	Overhead Gantry		FSC	Gantry or gantries providing air and electrical connections	Gantry, air lines, air regulators, cabling.	

©2026 Fédération Internationale de l'Automobile

Ref.	Component or Assembly	Art.	Class	System Description, & Boundaries	Included Components (List not exhaustive) & Supply Terms	Excluded Components
				to other items of pitstop equipment.		
14F	Control System		FSC	The system used to control the pit–stop	Sensors, cameras, “traffic lights”, associated cabling, software.	
14G	Transport Boxes		FSC	Boxes and stillages used to transport pitstop equipment	Boxes, stillages.	

2021

Table 2 –Key Components

Component	Reference
Survival Cell	Appendix C6 – 1A
Front Wing	Appendix C6 – 2E
Front Impact Structure	Appendix C6 – 1G
Main Floor	C3.5.4
Wheel Bodywork Assemblies	C3.15
Gearbox Case & Rear Impact Structure	Appendix C6 – 3A Appendix C6 – 1H
Rear Suspension Members	Appendix C6 – 4G
Front Suspension Members	Appendix C6 – 4B
Rear Wing	Appendix C6 – 2G

2027

APPENDIX C7: APPROVED CHANGES FOR FUTURE YEARS

CONVENTION Appendix C7 Only:

Black Text: Text unchanged from current Issue of 2027 F1 technical Regulations - Section C

Pink Text: Changes relative to FIA 2027 F1 Regulations - Section C [Technical] – approved at the current issue.

Purple Text: Changes relative to FIA 2027 F1 Regulations - Section C [Technical] – approved at a previous issue.

Changes Approved for 2028

C5.2 Power Unit Energy Flow

/.../

C5.2.3 Fuel energy flow must not exceed ~~3150~~ 3400 MJ/h.

C5.2.4 Below 10500rpm the fuel energy flow must not exceed EF(MJ/h) = 0.306*N(rpm)+187 ~~0.284*N(rpm)+168.~~

/.../

C5.2.7 The absolute electrical DC power of the ERS-K may not exceed ~~375~~ 400 kW.

/.../

C5.2.9 The difference between the maximum and the minimum state of charge of the ES may not exceed ~~4.5~~ / 5.0 MJ at any time the car is on the track.

C5.3 Turbo Charger

C5.3.2 Engine intake air pressure must be less than ~~5.0~~5.5 barA at all times. The pressure of the air will be measured by two FIA approved and sealed devices through which all air destined for combustion must flow. These devices must be installed in FIA approved locations situated in the engine intake air system downstream of the charge air cooling system (as described in Article C5. 22.2).

C5.3.5 Referring to Drawing 4 of Appendix C3, the turbocharger compressor and turbine must satisfy the following dimensional constraints. Only compressor and turbine wheels approved by the FIA Technical Department will be allowed:

a. The compressor exducer blade outer diameter (A) must lie between 100mm and ~~110~~ 115mm. For the avoidance of doubt, no part of the compressor wheel (including blades, hub and any blade/hub fillet radius as indicated by (g) on Drawing 4 of Appendix C3) can have a diameter more than the upper limit and the maximum diameter of the compressor wheel (including blades, hub and any blade/hub fillet radius) cannot have a diameter smaller than the lower limit.

b. The compressor axial distance from the outside diameter of the inducer blade edge (h) to rear plane of exducer (f), at its outer diameter (B) must lie between 30mm and ~~35~~ 40mm.

c. The turbine inducer blade outer diameter (C) must lie between 90mm and ~~100~~ 105mm. For the avoidance of doubt, no part of the turbine wheel (including blades, hub and any blade/hub fillet radius as indicated by (k) on Drawing 4 of Appendix C3) can have a diameter more than the upper limit and the maximum diameter of the turbine wheel (including blades, hub and any blade/hub fillet radius) cannot have a diameter smaller than the lower limit.

d. The turbine axial distance from the outside diameter of the exducer blade edge (i) to forward plane of inducer (j), at its outer diameter (D) must lie between 35mm and ~~40~~ 45mm.

e. The maximum distance (E) between the rear of the compressor exducer (f) and the front of the turbine inducer (j) will be 175mm.

C5.5 Mass and centre of gravity

C5.5.1 Depending on where the MGU-K Mechanical Transmission (as defined in item 27 of Appendix C4) is located, the overall mass of the ICE "PU Mass group" elements as referred to in Appendix C3 must be no less than the values defined below:

a. If all of the speed ratio of the MGU-K Mechanical Transmission is located in the RV-PU-ERS the total mass of the ICE must be no less than 130.0 kg.

b. If all of the speed ratio of the MGU-K Mechanical Transmission is located in the RV-PU-ICE the total mass of the ICE must be no less than 134.0 kg.

c. If part of the speed ratio of the MGU-K Mechanical Transmission is located in both the RV-PU-ICE and the RV-PU-ERS the total mass of the ICE must be no less than 132.0 kg.

C5.5.2 The overall mass of the PU must be a minimum of 187 kg.

[FIA] For 2028 each PUM will be allowed to distribute the 2 kg total added mass across one or two PU mass groups using whole-kilogram values only.

C15.8 Materials and construction – Pressure charging and exhaust systems (Components inside the PU Perimeter)

Advisory Committee: PUAC
Governance: PU Manufacturers' Governance Agreement / WMSC

C15.8.3 The restrictions detailed in article C15.6.1 i) do not apply to the compressor housing (from variable geometry intake device(s) housing if present to Compressor Outlet(s)) which must be manufactured from aluminium-based alloy containing up to 2.5% weight Lithium or titanium alloys.

©2026 Fédération Internationale de l'Automobile

APPENDIX C3: DRAWINGS

[FIA]: For 2028 each PUM will be allowed to distribute the 2 kg total added mass across one or two PU mass groups using whole-kilogram values only

Drawing 9 PU ELEMENT MINIMUM MASS LIMITS (for reference only)

ESME	MGU-K	MGU-K Mechanical Transmission	ICE	TC	Powerbox
			No individual mass limit	Min **12 kg**	No individual mass limit
Min **35*kg**	Min **16*kg**	Assumed **4 kg**	Min ICE + TC + Powerbox **130* kg**		

2028 PU MASS ALLOWANCE AS WEIGHED

		ESME Min Mass as weighed		MGU-K Min Mass as weighed		Not weighed		ICE Min Mass as weighed		TOTAL PU MINIMUM MASS
Drive in MGU-K	>	35*kg	>	20*kg	>	-	>	**132*** kg	>	**187 kg**
Drive Split	>	35*kg	>	18*kg	>	-	>	**134*** kg	>	**187 kg**
Drive in ICE	>	35*kg	>	16*kg	>	-	>	**136*** kg	>	**187 kg**

TOTAL PU MINIMUM MASS = ESME Min Mass* + MGU-K Min Mass* + ICE Min Mass* ≥ **187** kg

***: 2kg to be allocated across one or two of the PU mass group using whole-kilogram values only**

©2026 Fédération Internationale de l'Automobile

APPENDIX C4: POWER UNIT SYSTEMS, FUNCTIONS, COMPONENTS AND SUPPLY PERIMETER

Advisory Committee: PUAC

Governance: PU Manufacturers' Governance Agreement / WMSC

Table 1: Power Unit Components Table 1: Power Unit Components

[FIA]: For 2027 changes to PU elements impacted by the changes of regulations will be permitted under the provisions of Art. 3.4 and 3.6 of Appendix C5

PU Area	Item No	List of PU functions/ systems/ components	PU ELEMENT	SEALED PERIMETER	SUPPLY PERIMETER	REFERENCE VOLUME	PU MASS GROUP	UPGRADE SCHEDULE (HOMOLOGATION STATUS)						COMPONENT CLASSIFICATION	PU-ANC
								2026	2027	2028	2029	2030	ADUO		
ICE ASSEMBLY	1	Main ICE assembly comprising crankcase, cylinder heads (except combustion chamber and ports and injector port machining), crankshaft, camshaft (excluding camshaft lobe profiles), cam drive, cam covers, front and rear covers, valves, finger followers, Internal gear drives, any part which provides a structural connection between the Survival Cell and the gearbox case through the ICE mounting studs.	ICE	INC	INC	ICE	ICE	✓	✗	✓	✗	✗	✓	LPUC	
	2	ICE-mounted water pumps, ICE oil pumps, ICE oil scavenge pumps, any air/oil separator Non-hydraulic actuators (to allow PU to function), ICE-mounted air valve compressors.	ICE	INC	INC	ICE	ICE	✓	✗	✓	✗	✗	✓	LPUC	YES
	3	Flywheel	ICE	EXC	INC	ICE	ICE	✓	✓	✓	✓	✓	✓	LPUC	
	4	Main ICE assembly comprising combustion chamber surface and pre-chamber detail within cylinder heads, piston, connecting rod, camshaft lobe profiles, intake and exhaust ports, injector port machining, valvegear air spring sub-assemblies.	ICE	INC	INC	ICE	ICE	✓	✓	✓	✓	✗	✓	LPUC	
	5	ICE intake air system components including	ICE	INC	INC	ICE	ICE	✓	✓	✓	✓	✗	✓	LPUC	YES

©2026 Fédération Internationale de l'Automobile

PU Area	Item No	List of PU functions/ systems/ components	PU ELEMENT	SEALED PERIMETER	SUPPLY PERIMETER	REFERENCE VOLUME	PU MASS GROUP	UPGRADE SCHEDULE (HOMOLOGATION STATUS)						COMPONENT CLASSIFICATION	PU-ANC
								2026	2027	2028	2029	2030	ADUO		
		Trumpets, Throttle system, Plenum.													
	6	ICE intake air system components, downstream of those included in item 57 and other than those included in item 5	ICE	INC	INC	EXC	ICE	✓	✓	✓	✓	✗	✓	LPUC	YES
	7	PU mounted fuel system components downstream of the High Pressure Fuel Pump: (e.g., high pressure fuel hoses, fuel rails)	ICE	INC	INC	ICE	ICE	✓	✗	✓	✗	✗	✓	LPUC	YES
	8	High Pressure Fuel Pump	ICE	INC	INC	ICE	ICE	✓	✗	✗	✗	✗	✗	SSPUC	YES
	9	ICE Fluid Filters (Oil,Fuel), oil pump PRV mechanism	ICE	EXC	INC	ICE	ICE	✓	✗	✓	✗	✗	✓	LPUC	
	10	Fuel Injectors	ICE	INC	INC	ICE	ICE	✓	✗	✗	✗	✗	✗	SSPUC	YES
	11	Fuel Injector spray pattern tuning feature	ICE	INC	INC	ICE	ICE	✓	✓	✓	✓	✗	✓	LPUC	
	12	Knock Sensors	ICE	EXC	INC	ICE	ICE	✓	✗	✗	✗	✗	✗	SSPUC	
	13	Spark Plugs	ICE	EXC	INC	ICE	ICE	✓	✓	✓	✓	✗	✓	LPUC	
EXHAUST	14	Engine Exhaust System (including thermal insulation, excluding fasteners and seals)	EXH	INC	INC	ICE	ICE	✓	✓	✓	✓	✗	✓	LPUC	
EXHAUST	15	Exhaust fasteners and seals	EXH	EXC	INC	ICE	ICE	✓	✓	✓	✓	✗	✓	LPUC	
TURBO	16	Turbo Charger - Includes Compressor and Turbine Wheels, Shaft, Bearings, Centre, Compressor and Turbine Housings, Inlet VG Device, compressor inlet	TC	INC	INC	TC	TC and ICE	✓	✓	✓	✓	✗	✓	LPUC	
TURBO	17	Turbo Charger mounted electrical components (e.g. wiring looms, non-regulatory sensors)	TC	EXC	INC	TC	TC and ICE	✓	✓	✓	✓	✗	✓	LPUC	
WG / POP-OFF	18	Wastegate or similar	EXH	INC	INC	ICE	ICE	✓	✓	✓	✓	✗	✓	LPUC	YES
WG / POP-OFF	19	Pop-Off Valve or similar	ICE	INC	INC	ICE	ICE	✓	✓	✓	✓	✗	✓	LPUC	YES
PU ELECTRIC	20	ICE or EXH-mounted electrical components (e.g. wiring looms within legality volume, non-	ICE	EXC	INC	ICE	ICE	✓	✓	✓	✓	✗	✓	LPUC	

©2026 Fédération Internationale de l'Automobile

PU Area	Item No	List of PU functions/ systems/ components	PU ELEMENT	SEALED PERIMETER	SUPPLY PERIMETER	REFERENCE VOLUME	PU MASS GROUP	UPGRADE SCHEDULE (HOMOLOGATION STATUS)						COMPONENT CLASSIFICATION	PU-ANC
								2026	2027	2028	2029	2030	ADUO		
		regulatory-sensors, actuators)													
	21	Clutch shaft regulatory torque sensor	EXC	EXC	EXC	EXC	EXC							App C6 [3F]	
	22	PU-mounted regulatory temperature and pressure sensors	ICE or TC or MGU-K or EXH or ES	EXC	INC	Linked to PU Element	Linked to PU Element	✓	✗	✗	✗	✗	✗	SSPUC	
	23	Other regulatory PU sensors	EXC	EXC	EXC	EXC	EXC	✓	✓	✓	✓	✗	✗	SSPUC	
	24	Ignition Coils	ICE	EXC	INC	ICE	ICE	✓	✓	✓	✓	✗	✓	DSPUC	
	25	FIA Standard ECU.	EXC	EXC	EXC	EXC	EXC							App C6 [11S]	
		/.../													
OIL TANK	45	Main PU oil tank	ICE	INC	INC	OT	ICE	✓	✓	✓	✗	✗	✓	LPUC	YES
OIL TANK	46	Oil level sensor	ICE	EXC	INC	OT	ICE	✓	✓	✓	✗	✗	✓	SSPUC	
OIL TANK	47	Catch tanks, any breather system connected to the PU	ICE	INC	INC	OT and ICE	ICE	✓	✓	✓	✗	✗	✓	LPUC	YES
		/.../													
HYDRAULICS	63	ICE-mounted hydraulic pump including associated brackets, fixings, tubes and hoses	EXC	EXC	EXC	EXC	EXC							App C6 [7A]	
HYDRAULICS	64	Hydraulic system servo valve(s), manifold and hoses for PU control.	ICE	INC	INC	EXC	ICE	✓	✓	✓	✓	✗	✓	LPUC	YES
HYDRAULICS	65	Hydraulic system actuator(s) for PU control	ICE	INC	INC	ICE	ICE	✓	✗	✓	✗	✗	✓	LPUC	YES
HYDRAULICS	66	Hydraulic system (e.g., accumulators, manifolds, servo-valves, solenoids, actuators, hoses) other than components included in items 64 and 65.	EXC	EXC	EXC	EXC	EXC							App C6 [7A, 7B or 7C]	
HYDRAULICS	67	ICE-mounted hydraulic circuit filters	ICE	EXC	INC	EXC	ICE	✓	✓	✓	✓	✓	✓	LPUC	
		/.../													

©2026 Fédération Internationale de l'Automobile

PU Area	Item No	List of PU functions/ systems/ components	PU ELEMENT	SEALED PERIMETER	SUPPLY PERIMETER	REFERENCE VOLUME	PU MASS GROUP	UPGRADE SCHEDULE (HOMOLOGATION STATUS)						COMPONENT CLASSIFICATION	PU-ANC
								2026	2027	2028	2029	2030	ADUO		
	78	Lambda Sensor(s)	EXH	EXC	INC	EXC	EXC	✓	✓	✓	✓	✗	✓	DSPUC	
FLUIDS	79	Fuel	EXC	EXC	EXC	EXC	EXC	✓	✓	✓	✓	✗	✓		
FLUIDS	80	Engine oil	EXC	EXC	EXC	EXC	EXC	✓	✓	✓	✓	✗	✓		
FLUIDS	81	Hydraulic fluid	EXC	EXC	EXC	EXC	EXC	✓	✓	✓	✓	✓	✓		
FLUIDS	82	Engine Coolant	EXC	EXC	EXC	EXC	EXC	✓	✓	✓	✓	✓	✓		
FLUIDS	83	ERS Fluid	EXC	EXC	EXC	EXC	EXC	✓	✓	✓	✓	✓	✓		
BALLAST	84	ICE Ballast (subject to Article C4.4)	ICE	INC	INC	ICE	ICE	✓	✓	✓	✓	✓	✓	LPUC	

2027