POWER SUPPLY

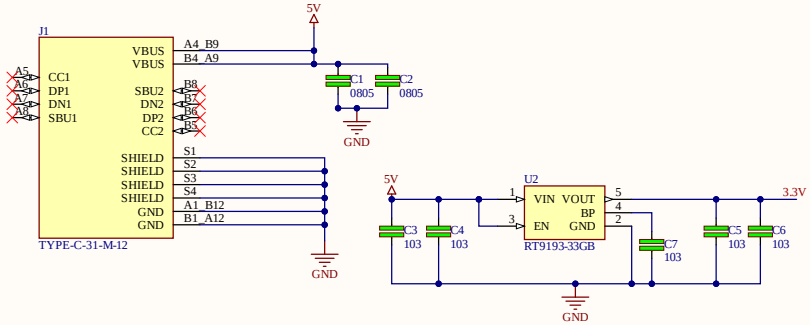

DISPLAY

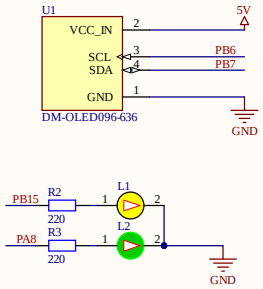

SENSOR

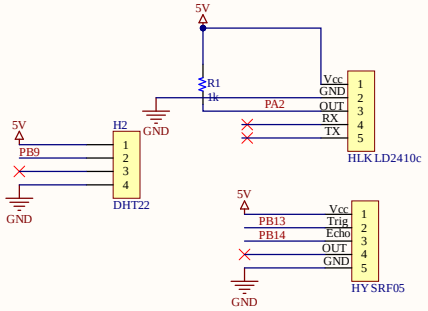

CONTROL

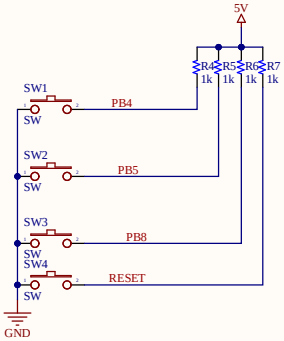

MCU

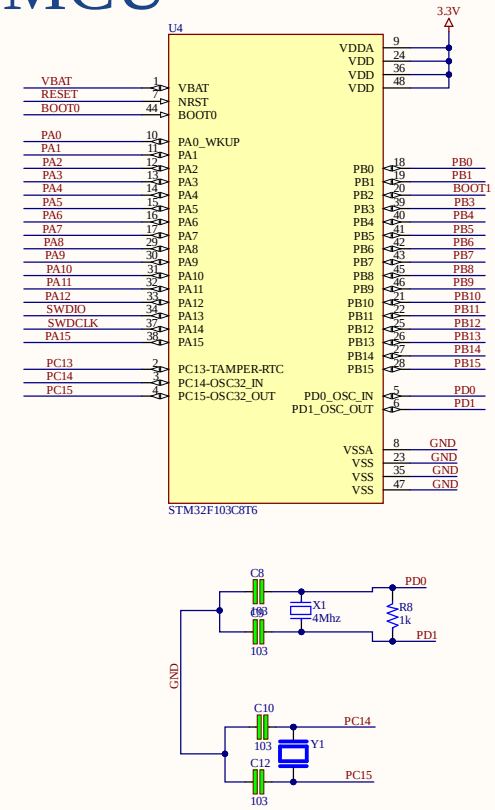

J-link OB interface

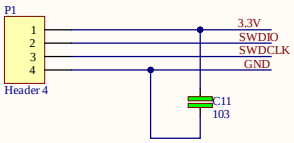

FUNCTION

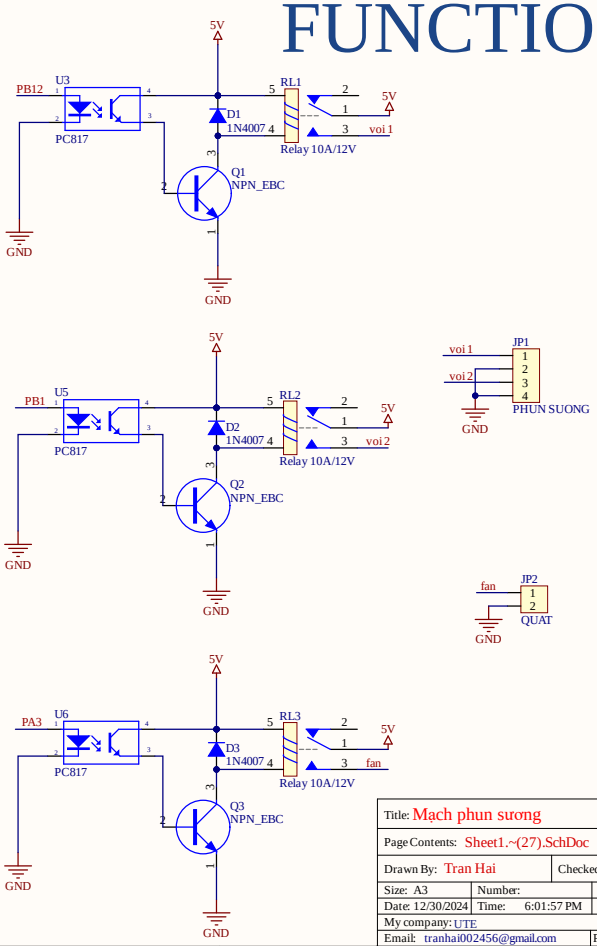

Title: Mạch phun sương		
Page Contents: Sheet1.~(27).SchDoc		
Drawn By: Tran Hai	Checked By:	
Size: A3	Number:	Revision:
Date: 12/30/2024	Time: 6:01:57 PM	Sheet of
My company: UTE		
Email: tranhai002456@gmail.com		Phone: 0385440231