Power

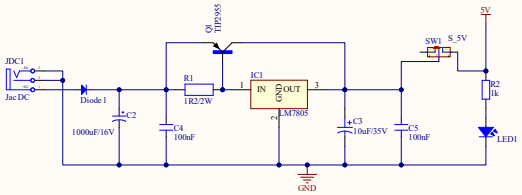

Sensors

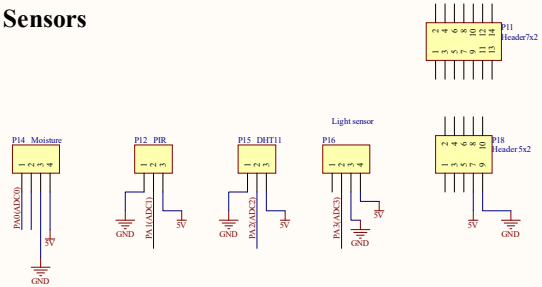

OLED

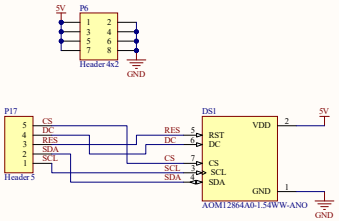

ATMEGA 32

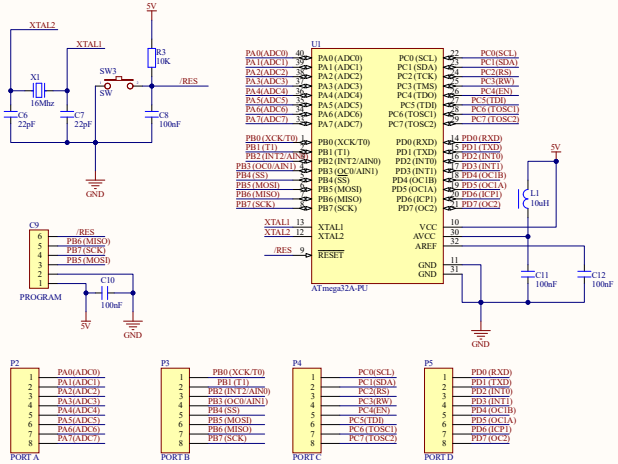

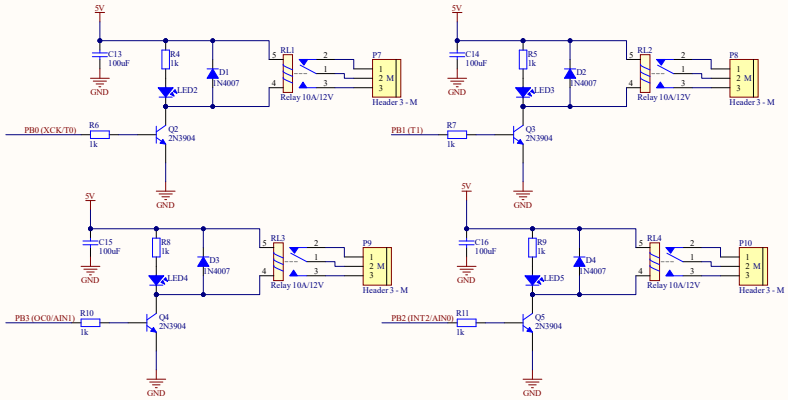

Text LCD

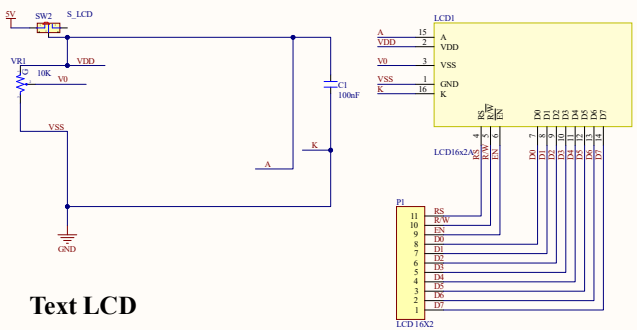

NodeMCU

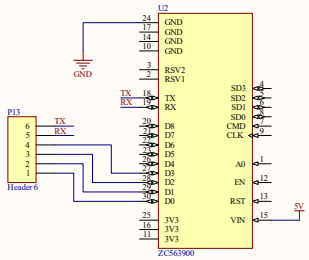

Title *			
Size: A2	Number:*	Revision:*	
Date: 3/6/2026	Time: 2:59:52 PM	Sheet * of *	
File: F:\AAA\MPS\Project\MPS27102017.schdoc			

Altium