This ICCV Workshop paper is the Open Access version, provided by the Computer Vision Foundation.
Except for this watermark, it is identical to the accepted version;
the final published version of the proceedings is available on IEEE Xplore.

MMF-QE: Advanced Multi-Modal Fusion for Quality Assessment and Engagement Prediction in User-Generated Short Videos

Fengbin Guan, Zihao Yu, Yiting Lu, Wei Luo, Yixin Gao, Xin Li†, Zhibo Chen†
University of Science and Technology of China
{guanfb, yuzihao, luyt31415, lw21, gaoyixin}@mail.ustc.edu.cn
{xin.li, chenzhibo}@ustc.edu.cn

Abstract

Predicting viewer engagement for user-generated content (UGC) short videos on social media platforms remains a challenge due to limited initial user interactions. Current video quality assessment (VQA) datasets do not reliably correlate with real-world engagement levels. In response, the organizers of the EVQA-SnapUGC competition introduced SnapUGC, a large-scale dataset of 90,000 real-world short videos from Snapchat Spotlight, accompanied by the Engagement Continuation Rate (ECR) metric to assess viewer retention. We propose a comprehensive multi-branch method to predict ECR based on video content. Our approach integrates branches for technical quality evaluation, aesthetic analysis, multi-modal feature extraction, and advanced multi-modal interactive understanding. These branches collaboratively enhance prediction accuracy by effectively capturing complex viewer preferences. Extensive experiments on the SnapUGC dataset show our framework achieves state-of-the-art performance, significantly improving engagement prediction for short-form UGC videos.

1. Introduction

The proliferation of short-form video platforms such as Snapchat Spotlight, TikTok, and Instagram Reels has fundamentally reshaped digital content consumption. A critical challenge for these platforms is the accurate and rapid prediction of user engagement for newly published, or "cold-start," videos, which lack sufficient interaction data for traditional collaborative filtering methods. Effectively identifying captivating content is paramount for enhancing user experience, fostering creator growth, and maintaining a vibrant platform ecosystem. However, prior approaches, particularly those adapted from traditional Video Quality Assessment (VQA), have shown limited success. These methods often focus on technical artifacts like distortion and blur, which, as noted by Li et al. [14], do not strongly correlate with the subjective and content-driven nature of user engagement.

To address this gap, this paper introduces a novel, multi-stage collaborative framework designed to robustly predict the Engagement Continuation Rate (ECR), which we define as the probability that a viewer will watch a video for more than five seconds. The ECR serves as a direct proxy for a video's ability to immediately capture and retain viewer interest. Our overall methodology, illustrated in Figure 1, is built on the synergy of three distinct analytical branches. It begins with a foundational feature-based framework that leverages a comprehensive suite of multi-modal features. This is complemented by a disentangled two-branch model, inspired by the work of DOVER [32], which assesses a video's technical and aesthetic qualities separately. The framework culminates in an end-to-end approach that fine-tunes a state-of-the-art Large Vision-Language Model (LVLM), Qwen2.5-VL [2], through a specialized instruction-following schema.

Our experiments demonstrate the effectiveness of this composite approach, with our final model, **MMF-QE**, achieving state-of-the-art performance. The principal contributions of this work are as follows:

- We propose a novel, three-stage collaborative framework that synergizes the strengths of feature-engineering, disentangled quality analysis, and end-to-end LVLM fine-tuning for the task of short-video engagement prediction.
- We conduct a comprehensive ablation study that validates the effectiveness of each component, highlighting the strong performance of our feature-based baseline and the remarkable adaptability of the LVLM through our instruction-tuning strategy.
- We validate our framework in a real-world competitive setting, achieving **first place** in the **VQualA 2025 EVQA-SnapUGC: Engagement Prediction for Short Videos Challenge**, thereby confirming the state-of-the-art performance and generalization capability of our method on a blind test set.

† Corresponding Author.

2. Related Works

2.1. Video Quality Assessment

Traditional Video Quality Assessment (VQA) methods [13, 15, 19, 20, 25, 26] rely on handcrafted features for evaluating video quality. However, these methods are limited by the specific quality factors considered by such features, resulting in inconsistencies with human subjective evaluations. Deep learning-based VQA methods [7, 8, 16, 17, 23, 30, 31, 38], capable of extracting deep video features and predicting quality via regression networks, demonstrate better alignment with human perception compared to conventional methods.

Nevertheless, when applied to User-Generated Content (UGC) on social media platforms, current VQA methods fail to account for the influence of supplementary information, such as titles and descriptions. Furthermore, existing VQA models are often trained on datasets [5, 9, 10, 22, 29, 35–37] where annotations are derived from complete video viewings. This contrasts sharply with social media user behavior, where individuals frequently skip uninteresting videos without full playback. Consequently, due to the impact of unconsidered external information and inherent biases in training data, current VQA methods are insufficient for accurately assessing the quality of social media UGC.

2.2. Engagement Prediction

Engagement can be quantified through various methodologies. Self-reported engagement [12], obtained via questionnaires and interviews, inherently suffers from user subjectivity. Cognitive engagement [6, 11, 18], while leveraging measurement tools, is limited to assessing a small number of user interactions. In contrast, online behavioral metrics [1, 3, 24, 27, 34], such as dwell time on webpages, offer a robust and meaningful approach to evaluating the depth of user engagement within a platform.

Regarding dwell time-based user engagement prediction, Mathur et al. [18] explored modeling and predicting attention-based engagement within smartphone contexts. Similarly, dwell time prediction has been investigated in areas like session-based recommendation (SBR) system [4, 40], news and non-news page reading [21], and media streaming [28].

For video content, online behavioral metrics represent an effective means of quantifying user engagement. Wu et al. [33] assessed various online video engagement metrics, including watch time and watch percentage. To mitigate biases introduced by varying video durations, Zhan et al. [39] proposed a Duration-Deconfounded Quantile-based (D2Q) watch-time prediction framework. Additionally, Li et al. [14] introduced two metrics, Normalized Average Watch Percentage (NAWP) and Engagement Continuity Ratio (ECR), specifically to characterize short video engagement.

3. Method

Our overall methodology for predicting the Engagement Continuation Rate (ECR) is a multi-stage, collaborative framework that synergizes the complementary strengths of three distinct analytical branches. As illustrated in Figure 1, this approach combines a foundational feature-based predictor, a disentangled model that assesses technical and aesthetic factors, and a state-of-the-art, instruction-tuned Large Vision-Language Model (LVLM). This collaborative design allows for a comprehensive and nuanced understanding of the diverse factors driving short-video engagement. The architecture and rationale behind each of these three core components are detailed in the following subsections.

3.1. Foundational Framework for Engagement Prediction

Our methodology is built upon the robust framework for engagement prediction introduced by Li et al. [14]. We adopt their approach as a foundational module for its sophisticated use of multi-modal features and its insightful problem formulation, which we leverage to predict short video engagement. Specifically, we focus on predicting the Engagement Continuation Rate (ECR), a metric defined as the probability that a viewer will watch a video for more than five seconds. This metric is a powerful indicator of a video's initial "hook" and its ability to captivate an audience from the outset.

The original authors astutely formulate engagement prediction as a conditional problem, acknowledging that engagement metrics are inherently biased by the recommendation system that surfaces the content. Following this formulation, our goal is to predict the ECR for a given video v within the context of the recommendation environment, using an engagement prediction model G:

$$\hat{\text{ECR}} = G(v) \tag{1}$$

This approach realistically models engagement by focusing purely on the video's content, independent of specific user or creator histories, making it ideal for cold-start scenarios.

The strength of this framework lies in its comprehensive feature engineering, which moves beyond traditional visual analysis to create a holistic understanding of the video. We utilize the same diverse set of multi-modal features proposed by Li et al. [14], including:

- **Core VQA Features:** This includes per-frame semantic features to understand content, per-frame distortion features to assess objective quality, and per-clip action recognition features to capture dynamics.
- **Auditory and Textual Data:** To capture atmospheric and contextual elements, the framework incorporates features

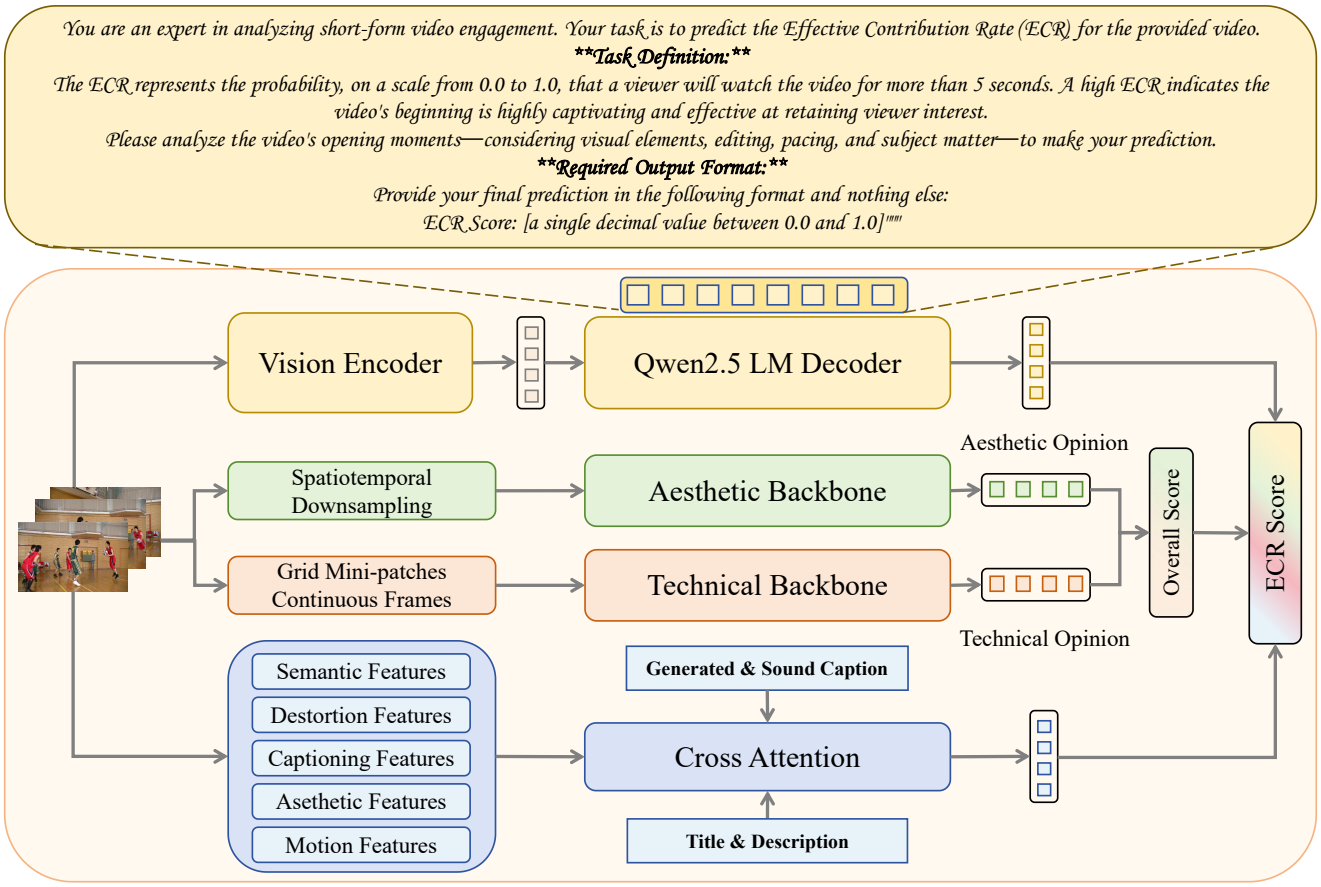

Figure 1. An overview of our proposed multi-stage, collaborative framework for Engagement Continuation Rate(ECR) prediction. The framework integrates three distinct branches: a foundational feature-based predictor, a disentangled model for technical and aesthetic analysis, and an instruction-tuned Large Vision-Language Model (LVLM).

from background sound classification, as well as the title and description provided by the creator.

- **Advanced Semantic Features**: The model is further enriched with generated video captions. Critically, this includes not only the textual captions themselves but also the intermediate visual features from the captioning model, which provides a much deeper, machine-perceived understanding of the visual narrative.
- **Human Perception Features:** To model how a video might be perceived aesthetically, features related to human aesthetic preference are also integrated.

This multi-modal strategy is exceptionally effective because it allows the model to analyze not just *what* is in the video, but also its mood, context, and aesthetic quality, which are crucial factors in determining initial viewer retention.

The network architecture, which we adopt directly, is designed to effectively fuse these disparate data streams. As illustrated by Li et al. [14], the process begins by dividing the video into short clips. For each clip, visual and textual features are processed and then elegantly fused using a cross-attention mechanism, where text features provide context to the visual stream.

Subsequently, a multi-layer self-attention architecture is employed to model the temporal relationships between all the feature-rich clips. This is a pivotal design choice, as the self-attention mechanism can weigh the importance of different moments and capture the narrative flow within the video's crucial opening seconds. The final aggregated features are then passed to a prediction head to regress the ECR value. As our focus is solely on ECR, the prediction is derived from the features corresponding to the first five seconds of the video, and the model is optimized using the following loss function:

$$L = ||\text{ECR} - \hat{\text{ECR}}||_2 \tag{2}$$

By adopting this sophisticated and well-validated methodology, we establish a powerful baseline capable of deeply understanding video content to predict its initial engagement potential.

3.2. Disentangling Technical and Aesthetic Factors for ECR Prediction

While our foundational model provides a robust prediction, the decision for a user to remain engaged within the first few seconds of a video, is driven by a complex interplay of factors. To model this nuance more effectively, we enhance our approach by adopting the core methodological principle from the work of Liao et al. on the Disentangled Objective Video Quality Evaluator (DOVER) [15]. Their key insight, which we adapt for our task, is that a viewer's overall impression is not monolithic but rather a composite of distinct **technical** and **aesthetic** judgments.

We hypothesize that ECR is similarly influenced by this duality. A video with severe technical flaws (e.g., extreme blurriness) may cause immediate disengagement regardless of its content, while a video with compelling aesthetic qualities (e.g., interesting subjects or skilled composition) is likely to retain viewers. Therefore, to achieve a more granular and accurate ECR prediction, we employ a two-branch architecture inspired by DOVER, with each branch specializing in one of these perceptual dimensions.

3.2.1. The Technical Branch: Identifying Engagement Blockers

The first branch is designed to assess the video's technical competence, acting as a model for identifying critical flaws that could serve as "engagement blockers." A low score from this branch suggests the presence of technical issues so severe that they would likely cause a user to abandon the video, resulting in a low ECR.

To achieve this, we adopt the *Technical View* generation strategy proposed by DOVER[32]. The input for this branch is not the original video, but a reconstructed view composed of stitched-together, randomly cropped mini-patches sampled from continuous frames. This innovative approach is highly effective for our task because it is designed to preserve local, low-level distortions like artifacts, noise, and blurs, while intentionally disrupting the global composition and semantic meaning of the video. By forcing the model to focus exclusively on these texture-level details, we train it to become a specialist in detecting the very technical imperfections that would negatively impact ECR.

3.2.2. The Aesthetic Branch: Capturing the Viewer's Interest

Conversely, the second branch is dedicated to evaluating the video's aesthetic appeal—the "hook" that captures and holds a viewer's interest. A high score from this branch indicates strong positive signals for content, composition, and visual appeal, which would correlate with a higher ECR.

Following the DOVER framework, this branch is fed an *Aesthetic View* of the video. This view is generated through spatiotemporal downsampling; The video frames are spatially down-sampled to a lower resolution and are sampled sparsely over time. This strategy is ideal for predicting engagement because it preserves the overarching semantics, subject matter, and compositional structure of the video while simultaneously reducing the model's sensitivity to the fine-grained technical distortions handled by the other branch. To further encourage this branch to focus purely on aesthetic elements, we incorporate the cross-scale regularization technique, which promotes feature similarity between different down-sampled versions of the video, effectively learning to ignore technical noise.

By leveraging these two specialized branches, our model learns to disentangle the distinct factors that contribute to user engagement. This allows for a more robust and interpretable prediction of the Engagement Continuation Rate, as it separately weighs the technical barriers and aesthetic incentives that influence a viewer's split-second decision to either keep watching or swipe away.

3.3. ECR Prediction via Instruction-Tuned LVLM

In the final stage of our methodology, we pivot from feature-based analysis to a holistic, end-to-end approach by leveraging a state-of-the-art Large Vision-Language Model (LVLM). For this purpose, we select Qwen2.5-VL as our foundational model, based on the impressive capabilities outlined in its technical report [2]. The choice is motivated by significant advancements of Qwen2.5-VL in fine-grained visual perception and temporal dynamics, which are critical for our task of predicting the Engagement Continuation Rate (ECR).

The architecture of Qwen2.5-VL is particularly well-suited for analyzing the crucial opening moments of a video. It features a native dynamic-resolution Vision Transformer (ViT) that processes visual inputs without distortion-inducing normalization, and it incorporates absolute time encoding through a novel Multimodal Rotary Position Embedding (MROPE). This allows the model to inherently comprehend spatial scales and the precise timing of events within a video, providing the necessary perceptual foundation to assess a video's initial "hook"

While Qwen2.5-VL possesses powerful, general-purpose multimodal understanding, we designed a specialized training strategy to adapt and focus its capabilities specifically on ECR prediction. We recast the task from a simple regression problem into a structured, instruction-following format. This approach allows us to tap into the model's advanced reasoning and instruction-following abilities, which were extensively honed during its own post-training phases

Specifically, we restructured our dataset and formulated the prediction task with the following prompt:

> *You are an expert in analyzing short-form video engagement. Your task is to predict the Effective Contribution Rate (ECR) for the provided video.*

Task Definition: *The ECR represents the probability, on a scale from 0.0 to 1.0, that a viewer will watch the video for more than 5 seconds. A high ECR indicates the video's beginning is highly captivating and effective at retaining viewer interest.*

Please analyze the video's opening moments—considering visual elements, editing, pacing, and subject matter—to make your prediction.

Required Output Format: *Provide your final prediction in the following format and nothing else:* `ECR Score: [a single decimal value between 0.0 and 1.0]`

We then fine-tune the Qwen2.5-VL model using a Supervised Fine-Tuning (SFT) approach on our dataset formatted according to this instruction schema. During training, the model receives the video frames and the instructional prompt as input, and its objective is to generate the precise target string containing the ground-truth ECR score. This method effectively transforms the numerical prediction task into a text-generation problem that is native to the LVLM's architecture. By framing the task this way, we harness the model's vast pre-trained knowledge about visual patterns and real-world concepts, enabling it to rapidly learn the subtle cues that correlate with viewer retention and generalize effectively to unseen videos.

4. Experiments

4.1. Implementation Details

To ensure the clarity and reproducibility of our experiments, this section outlines the specific configurations and training settings for each stage of our proposed framework. All experiments were conducted on a server equipped with four NVIDIA A100 GPUs.

Foundational Framework. In the first stage, for the foundational engagement prediction framework, we directly utilized the pre-trained model weights as provided by Li et al. [14]. This module was employed for inference only and did not undergo any retraining, serving as a robust feature extractor based on its original validated performance.

Disentangled Technical and Aesthetic Branches. For the second stage, which leverages the disentangled two-branch architecture, we adopted the methodology from DOVER[32]. We initialized the technical and aesthetic branches with the official pre-trained weights from their DOVER model. Subsequently, we fine-tuned these branches on our ECR dataset for a total of 15 epochs, selecting the model weights from the final epoch for evaluation.

Instruction-Tuned LVLM. In the third and final stage, we employed the `Qwen2.5-VL-Instruct` model released by the Qwen Team [2] as our base LVLM. We adapted our dataset to fit the instruction-following format detailed in Section 4.3. Using this formatted data, we performed one full epoch of Supervised Fine-Tuning (SFT) to align the model's capabilities with the specific task of ECR prediction.

4.2. Prediction Target and Evaluation Metrics

The central objective of our experimental evaluation is to predict the Engagement Continuation Rate (ECR). As previously defined, ECR represents the probability, on a scale from 0.0 to 1.0, that a viewer will continue watching a short video for more than five seconds. It serves as a direct measure of a video's ability to capture and retain audience interest from its outset.

To quantitatively assess model performance, we evaluate the correlation between predicted and ground-truth ECR scores using two standard metrics: the Spearman's Rank Correlation Coefficient (SRCC) and the Pearson Linear Correlation Coefficient (PLCC). SRCC assesses the monotonic ranking accuracy between predictions and labels, while PLCC measures their linear consistency.

For both SRCC and PLCC, values range from -1 to 1, where a higher value signifies a stronger positive correlation and thus a more accurate prediction from the model. To provide a single, comprehensive measure of performance, we compute a weighted **Final Score**, which combines both metrics. The final score is calculated as follows:

$$\text{Final Score} = 0.4 \times \text{PLCC} + 0.6 \times \text{SRCC} \tag{3}$$

This weighting places a greater emphasis on SRCC, prioritizing the model's ability to correctly rank videos by their engagement potential, which is often more critical in practical recommendation scenarios.

4.3. Experimental Results and Analysis

The performance of our proposed multi-stage framework and other comparative models on the ECR prediction task is presented in Table 1. All models were evaluated based on their PLCC, SRCC, and the weighted Final Score.

The results from our experiments provide several key insights into the effectiveness of different approaches for ECR prediction.

Zero-Shot Performance as a Lower Bound. As shown in Table 1, the performance of the off-the-shelf, untrained models (Qwen2.5-VL-7B* and InternVL3-14B*) is relatively low, with Final Scores of 0.183 and 0.318, respectively. This is expected, as these general-purpose LVLMs have not been specifically optimized for the nuanced task of engagement prediction. These results establish a lower bound and underscore the necessity of task-specific fine-tuning to achieve meaningful performance.

Table 1. Experimental results for ECR prediction on our test set. The Final Score is a weighted sum of PLCC and SRCC. *Indicates that the model was evaluated in a zero-shot setting without any training.

Model	PLCC	SRCC	Final Score
Qwen2.5-VL-7B*	0.179	0.185	0.183
InternVL3-14B*	0.315	0.320	0.318
KSVQE	0.595	0.588	0.590
ECR_Baseline	0.665	0.657	0.660
Dover	0.622	0.619	0.620
Qwen2.5_7B	0.624	0.628	0.627
MMF-QE(ours)	0.702	0.696	0.698

Effectiveness of Our Proposed Framework. Our three-stage framework demonstrates strong competitiveness. The ECR_Baseline, representing our foundational feature-based approach, achieves a very strong Final Score of 0.660. This result validates the effectiveness of the carefully engineered features from Li et al. [14] in capturing signals relevant to user engagement.

The fine-tuned Dover model, which disentangles technical and aesthetic aspects, achieves a Final Score of 0.620. While slightly lower than the ECR_Baseline, it shows a significant improvement over generic models. This suggests that while the disentanglement is a powerful concept, the pre-trained weights optimized for general video quality assessment (VQA) may not perfectly align with the specific nuances of engagement prediction, which is more about viewer captivation than objective quality.

Most notably, our fine-tuned Qwen2.5_7B model reaches a Final Score of 0.627. This represents a remarkable 242% improvement over its zero-shot counterpart (0.183). This substantial gain strongly validates our instruction-tuning strategy, proving its effectiveness in rapidly adapting a powerful, general-purpose LVLM to the specialized ECR prediction task with only a single epoch of training.

Comparison with Other Methods. When compared to other existing methods, our ECR_Baseline (0.660) stands out as a highly competitive model, outperforming the KSVQE baseline (0.590). While the MMF-QE model currently sets the state-of-the-art with a score of 0.698, our results demonstrate that a well-designed feature-based framework can be exceptionally effective. The promising results from our instruction-tuned Qwen2.5_7B also highlight a clear and viable path for future improvements by leveraging the scaling potential of LVLMs.

4.4. Competition Results

To validate the effectiveness of our proposed framework in a real-world, competitive environment, we participated in the *VQualA 2025 EVQA-SnapUGC: Engagement Prediction for Short Videos Challenge*. The final results were recorded at the competition's conclusion on July 5th, 2025, UTC.

Our method, submitted under the team, achieved state-of-the-art performance, securing **first place** among all participants. As shown in the final leaderboard in Table 2, our winning entry attained a Final Score of 0.698, with an SRCC of 0.696 and a PLCC of 0.702. This definitive result underscores the superior robustness and effectiveness of our multi-stage methodology. Achieving the top position validates that our framework successfully generalizes to the blind test set and outperforms other state-of-the-art methods in the field of engagement prediction.

Table 2. The final leaderboard of the VQualA 2025 EVQA-SnapUGC Challenge as of June 5, 2025, 23:59 UTC.

#	User	Final Score	SRCC	PLCC
1	**Ours**	**0.698**	**0.696**	**0.702**
2	Caesar_D	0.697	0.694	0.703
3	oooxygen	0.680	0.677	0.684
4	beikun	0.667	0.664	0.671
5	JianqinWu	0.664	0.661	0.669
6	c0smos	0.664	0.662	0.668
7	ldslds	0.660	0.657	0.665
8	cecilia930426	0.660	0.657	0.665

5. Conclusion

In this paper, we address the challenge of short-video engagement prediction by introducing a novel, multi-stage framework to predict the Engagement Continuation Rate (ECR). Our approach synergizes a robust feature-based predictor, a disentangled technical-aesthetic model, and an instruction-tuned Large Vision-Language Model to achieve a holistic analysis of the factors driving viewer retention. The definitive validation of our methodology was its state-of-the-art performance in the VQualA 2025 EVQA-SnapUGC Challenge, where our framework secured **first place**. This result confirms our method's superior effectiveness and generalization on a blind test set, presenting a powerful solution for a critical task in the content recommendation ecosystem. Future work will focus on exploring more advanced fusion strategies and extending the framework to other engagement metrics.

Acknowledgement

This work was supported in part by the National Natural Science Foundation of China (NSFC) under Grant 623B2098, 62021001, and 62371434, the Postdoctoral Fellowship Program of the China Postdoctoral Science Foundation (CPSF) under Grant Number GZC20252293, and

the China Postdoctoral Science Foundation-Anhui Joint Support Program under Grant Number 2024T017AH. This work was also funded by the Anhui Postdoctoral Scientific Research Program Foundation (No. 2025A1015).

References

[1] Eugene Agichtein, Eric Brill, and Susan Dumais. Improving web search ranking by incorporating user behavior information. In *Proceedings of the 29th annual international ACM SIGIR conference on Research and development in information retrieval*, pages 19–26, 2006. 2

[2] Shuai Bai, Keqin Chen, Xuejing Liu, Jialin Wang, Wenbin Ge, Sibo Song, Kai Dang, Peng Wang, Shijie Wang, Jun Tang, Humen Zhong, Yuanzhi Zhu, Mingkun Yang, Zhaohai Li, Jianqiang Wan, Pengfei Wang, Wei Ding, Zheren Fu, Yiheng Xu, Jiabo Ye, Xi Zhang, Tianbao Xie, Zesen Cheng, Hang Zhang, Zhibo Yang, Haiyang Xu, and Junyang Lin. Qwen2.5-vl technical report. *arXiv preprint arXiv:2502.13923*, 2025. 1, 4, 5

[3] Mikhail Bilenko and Ryen W White. Mining the search trails of surfing crowds: identifying relevant websites from user activity. In *Proceedings of the 17th international conference on World Wide Web*, pages 51–60, 2008. 2

[4] Veronika Bogina and Tsvi Kuflik. Incorporating dwell time in session-based recommendations with recurrent neural networks. In *RecTemp@ RecSys*, pages 57–59, 2017. 2

[5] Alexandre Ciancio, Eduardo AB Da Silva, Amir Said, Ramin Samadani, Pere Obrador, et al. No-reference blur assessment of digital pictures based on multifeature classifiers. *IEEE Transactions on image processing*, 20(1):64–75, 2010. 2

[6] Claudia Ehmke and Stephanie Wilson. Identifying web usability problems from eyetracking data. 2007. 2

[7] Fengbin Guan, Xin Li, Zihao Yu, Yiting Lu, and Zhibo Chen. Q-mamba: On first exploration of vision mamba for image quality assessment. 2

[8] Fengbin Guan, Zihao Yu, Yiting Lu, Xin Li, and Zhibo Chen. Internvqa: Advancing compressed video quality assessment with distilling large foundation model. In *2025 IEEE International Symposium on Circuits and Systems (ISCAS)*, pages 1–5. IEEE, 2025. 2

[9] Vlad Hosu, Franz Hahn, Mohsen Jenadeleh, Hanhe Lin, Hui Men, Tamás Szirányi, Shujun Li, and Dietmar Saupe. The konstanz natural video database (konvid-1k). In *2017 Ninth international conference on quality of multimedia experience (QoMEX)*, pages 1–6. IEEE, 2017. 2

[10] Vlad Hosu, Hanhe Lin, Tamas Sziranyi, and Dietmar Saupe. Koniq-10k: An ecologically valid database for deep learning of blind image quality assessment. *IEEE Transactions on Image Processing*, 29:4041–4056, 2020. 2

[11] Jeff Huang, Ryen W White, and Susan Dumais. No clicks, no problem: using cursor movements to understand and improve search. In *Proceedings of the SIGCHI conference on human factors in computing systems*, pages 1225–1234, 2011. 2

[12] Young Hoon Kim, Dan J Kim, and Kathy Wachter. A study of mobile user engagement (moen): Engagement motivations, perceived value, satisfaction, and continued engagement intention. *Decision support systems*, 56:361–370, 2013. 2

[13] Jari Korhonen. Two-level approach for no-reference consumer video quality assessment. *IEEE Transactions on Image Processing*, 28(12):5923–5938, 2019. 2

[14] Dasong Li, Wenjie Li, Baili Lu, Hongsheng Li, Sizhuo Ma, Gurunandan Krishnan, and Jian Wang. Delving deep into engagement prediction of short videos, 2023. 1, 2, 3, 5, 6

[15] Liang Liao, Kangmin Xu, Haoning Wu, Chaofeng Chen, Wenxiu Sun, Qiong Yan, and Weisi Lin. Exploring the effectiveness of video perceptual representation in blind video quality assessment. In *Proceedings of the 30th ACM international conference on multimedia*, pages 837–846, 2022. 2, 4

[16] Yiting Lu, Xin Li, Bingchen Li, Zihao Yu, Fengbin Guan, Xinrui Wang, Ruling Liao, Yan Ye, and Zhibo Chen. Aigc-vqa: A holistic perception metric for aigc video quality assessment. In *Proceedings of the IEEE/CVF Conference on Computer Vision and Pattern Recognition*, pages 6384–6394, 2024. 2

[17] Yiting Lu, Xin Li, Yajing Pei, Kun Yuan, Qizhi Xie, Yunpeng Qu, Ming Sun, Chao Zhou, and Zhibo Chen. Kvq: Kwai video quality assessment for short-form videos. In *Proceedings of the IEEE/CVF Conference on Computer Vision and Pattern Recognition*, pages 25963–25973, 2024. 2

[18] Akhil Mathur, Nicholas D Lane, and Fahim Kawsar. Engagement-aware computing: Modelling user engagement from mobile contexts. In *Proceedings of the 2016 ACM International Joint Conference on Pervasive and Ubiquitous Computing*, pages 622–633, 2016. 2

[19] Anish Mittal, Michele A Saad, and Alan C Bovik. A completely blind video integrity oracle. *IEEE Transactions on Image Processing*, 25(1):289–300, 2015. 2

[20] Michele A Saad, Alan C Bovik, and Christophe Charrier. Blind image quality assessment: A natural scene statistics approach in the dct domain. *IEEE transactions on Image Processing*, 21(8):3339–3352, 2012. 2

[21] Yoshifumi Seki and Mitsuo Yoshida. Analysis of user dwell time by category in news application. In *2018 IEEE/WIC/ACM International Conference on Web Intelligence (WI)*, pages 732–735. IEEE, 2018. 2

[22] Zeina Sinno and Alan Conrad Bovik. Large-scale study of perceptual video quality. *IEEE Transactions on Image Processing*, 28(2):612–627, 2018. 2

[23] Wei Sun, Xiongkuo Min, Wei Lu, and Guangtao Zhai. A deep learning based no-reference quality assessment model for ugc videos. In *Proceedings of the 30th ACM International Conference on Multimedia*, pages 856–865, 2022. 2

[24] Yuan Tian, Ke Zhou, and Dan Pelleg. What and how long: Prediction of mobile app engagement. *ACM Transactions on Information Systems (TOIS)*, 40(1):1–38, 2021. 2

[25] Zhengzhong Tu, Yilin Wang, Neil Birkbeck, Balu Adsumilli, and Alan C Bovik. Ugc-vqa: Benchmarking blind video quality assessment for user generated content. *IEEE Transactions on Image Processing*, 30:4449–4464, 2021. 2

[26] Zhengzhong Tu, Xiangxu Yu, Yilin Wang, Neil Birkbeck, Balu Adsumilli, and Alan C Bovik. Rapique: Rapid and

accurate video quality prediction of user generated content. *IEEE Open Journal of Signal Processing*, 2:425–440, 2021. 2

[27] Henriette C van Vugt, Elly A Konijn, Johan F Hoorn, I Keur, and Anton Eliéns. Realism is not all! user engagement with task-related interface characters. *Interacting with Computers*, 19(2):267–280, 2007. 2

[28] Theodore Vasiloudis, Hossein Vahabi, Ross Kravitz, and Valery Rashkov. Predicting session length in media streaming. In *Proceedings of the 40th International ACM SIGIR Conference on Research and Development in Information Retrieval*, pages 977–980, 2017. 2

[29] Yilin Wang, Junjie Ke, Hossein Talebi, Joong Gon Yim, Neil Birkbeck, Balu Adsumilli, Peyman Milanfar, and Feng Yang. Rich features for perceptual quality assessment of ugc videos. In *Proceedings of the IEEE/CVF conference on computer vision and pattern recognition*, pages 13435–13444, 2021. 2

[30] Haoning Wu, Chaofeng Chen, Jingwen Hou, Liang Liao, Annan Wang, Wenxiu Sun, Qiong Yan, and Weisi Lin. Fastvqa: Efficient end-to-end video quality assessment with fragment sampling. In *European conference on computer vision*, pages 538–554. Springer, 2022. 2

[31] Haoning Wu, Erli Zhang, Liang Liao, Chaofeng Chen, Jingwen Hou, Annan Wang, Wenxiu Sun, Qiong Yan, and Weisi Lin. Exploring video quality assessment on user generated contents from aesthetic and technical perspectives. In *Proceedings of the IEEE/CVF International Conference on Computer Vision*, pages 20144–20154, 2023. 2

[32] Haoning Wu, Erli Zhang, Liang Liao, Chaofeng Chen, Jingwen Hou Hou, Annan Wang, Wenxiu Sun Sun, Qiong Yan, and Weisi Lin. Exploring video quality assessment on user generated contents from aesthetic and technical perspectives. In *International Conference on Computer Vision (ICCV)*, 2023. 1, 4, 5

[33] Siqi Wu, Marian-Andrei Rizoiu, and Lexing Xie. Beyond views: Measuring and predicting engagement in online videos. In *Proceedings of the International AAAI Conference on Web and Social Media*, 2018. 2

[34] Xing Yi, Liangjie Hong, Erheng Zhong, Nanthan Nan Liu, and Suju Rajan. Beyond clicks: dwell time for personalization. In *Proceedings of the 8th ACM Conference on Recommender systems*, pages 113–120, 2014. 2

[35] Joong Gon Yim, Yilin Wang, Neil Birkbeck, and Balu Adsumilli. Subjective quality assessment for youtube ugc dataset. In *2020 IEEE International Conference on Image Processing (ICIP)*, pages 131–135. IEEE, 2020. 2

[36] Zhenqiang Ying, Haoran Niu, Praful Gupta, Dhruv Mahajan, Deepti Ghadiyaram, and Alan Bovik. From patches to pictures (paq-2-piq): Mapping the perceptual space of picture quality. In *Proceedings of the IEEE/CVF conference on computer vision and pattern recognition*, pages 3575–3585, 2020.

[37] Zhenqiang Ying, Maniratnam Mandal, Deepti Ghadiyaram, and Alan Bovik. Patch-vq:'patching up'the video quality problem. In *Proceedings of the IEEE/CVF conference on computer vision and pattern recognition*, pages 14019–14029, 2021. 2

[38] Zihao Yu, Fengbin Guan, Yiting Lu, Xin Li, and Zhibo Chen. Video quality assessment based on swin transformerv2 and coarse to fine strategy. *arXiv preprint arXiv:2401.08522*, 2024. 2

[39] Ruohan Zhan, Changhua Pei, Qiang Su, Jianfeng Wen, Xueliang Wang, Guanyu Mu, Dong Zheng, Peng Jiang, and Kun Gai. Deconfounding duration bias in watch-time prediction for video recommendation. In *Proceedings of the 28th ACM SIGKDD conference on knowledge discovery and data mining*, pages 4472–4481, 2022. 2

[40] Tengfei Zhou, Hui Qian, Zebang Shen, Chao Zhang, Chengwei Wang, Shichen Liu, and Wenwu Ou. Jump: a joint predictor for user click and dwell time. In *Proceedings of the 27th International Joint Conference on Artificial Intelligence. AAAI Press*, pages 3704–3710, 2018. 2