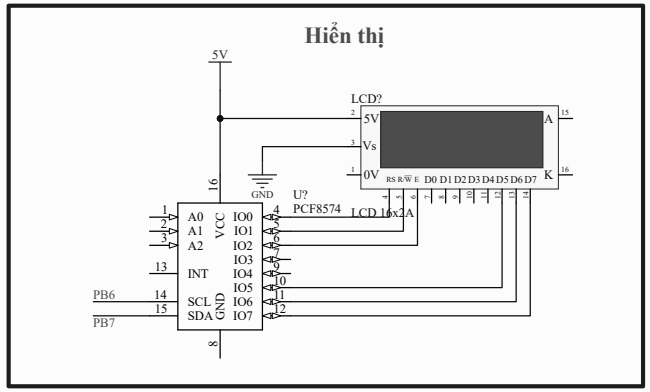

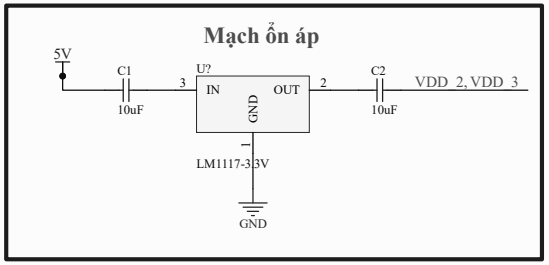

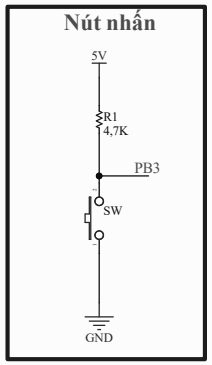

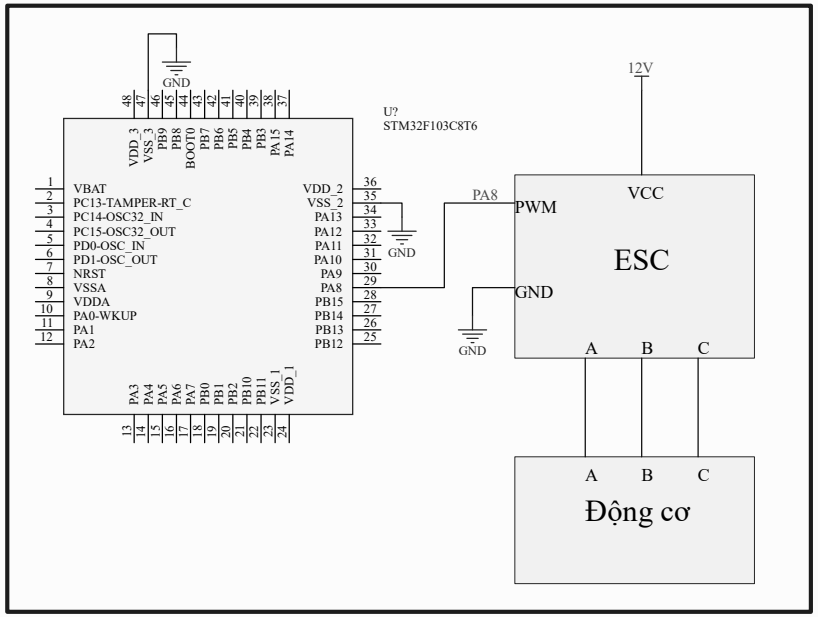

Title		
Size A3	Number	Revision
Date: 10/09/2025		Sheet of
File: C:\Users\..\Schematic.SchDoc		Drawn By: