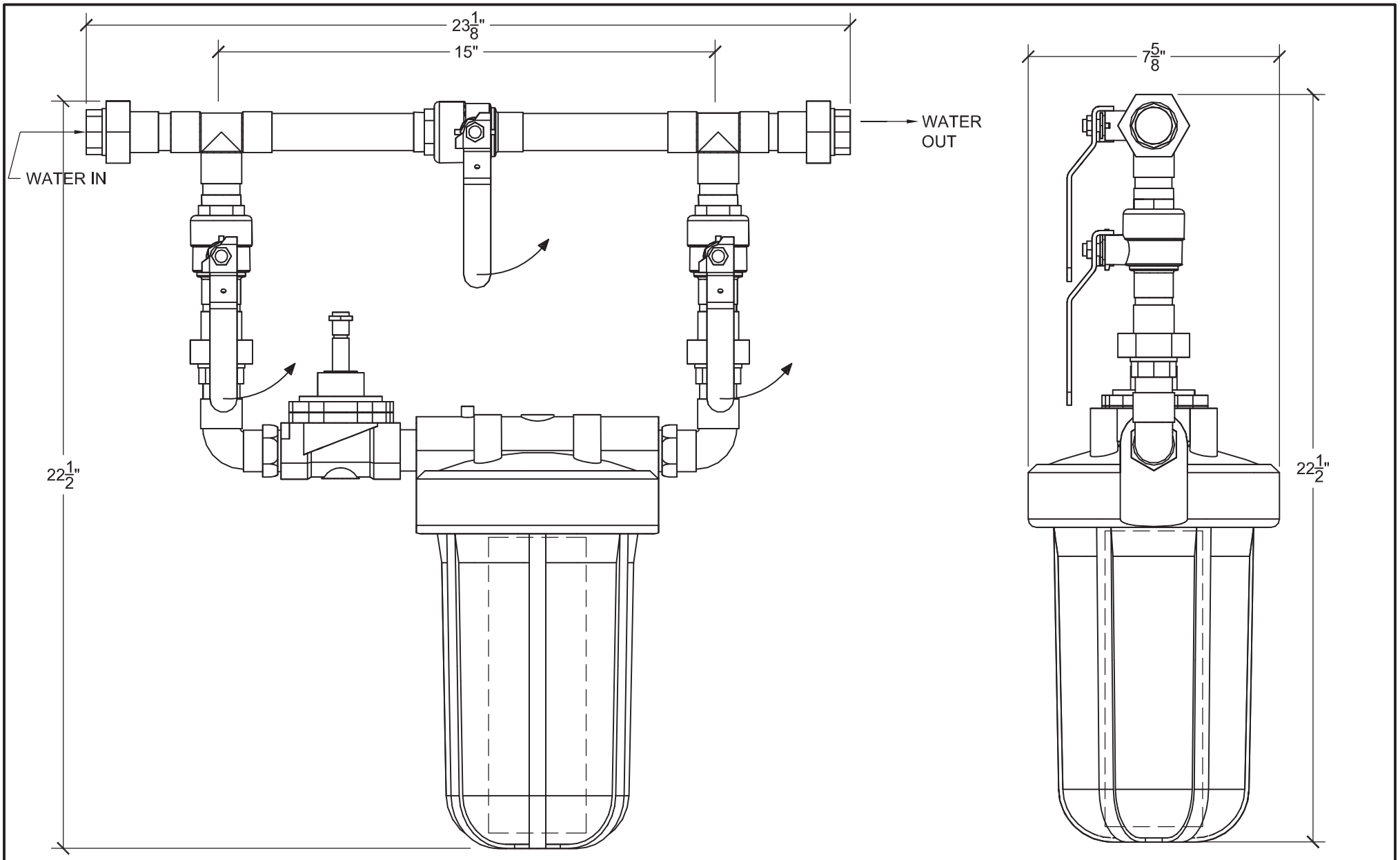

1. *DIMENSIONS ARE NOT AN EXACT REPRESENTATION OF ACTUAL UNIT, BUT A CLOSE APPROXIMATION.*
2. *NOT ALL FTTINGS AND PIPING ARE SHOWN. SOME PIPING MAY FALL OUTSIDE OF DIMENSIONS GIVEN.*

THE INFORMATION ON THIS DRAWING IS PROPRIETARY AND CONFIDENTIAL AND SHALL NOT BE DISCLOSED OR DUPLICATED WITHOUT CONSENT OF TECH WEST INC.

TECH WEST INC.

PART NAME:

1" WATER BYPASS UNIT

DATE: **4-6-12**	SCALE: **3" = 1' - 0"**	DRAWN: **MJ**	SHEET: **1 of 2**

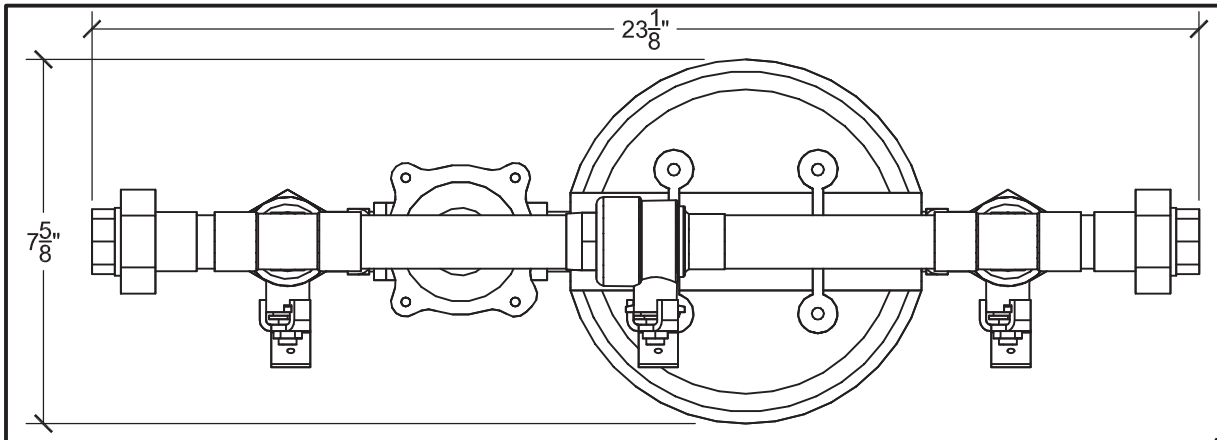

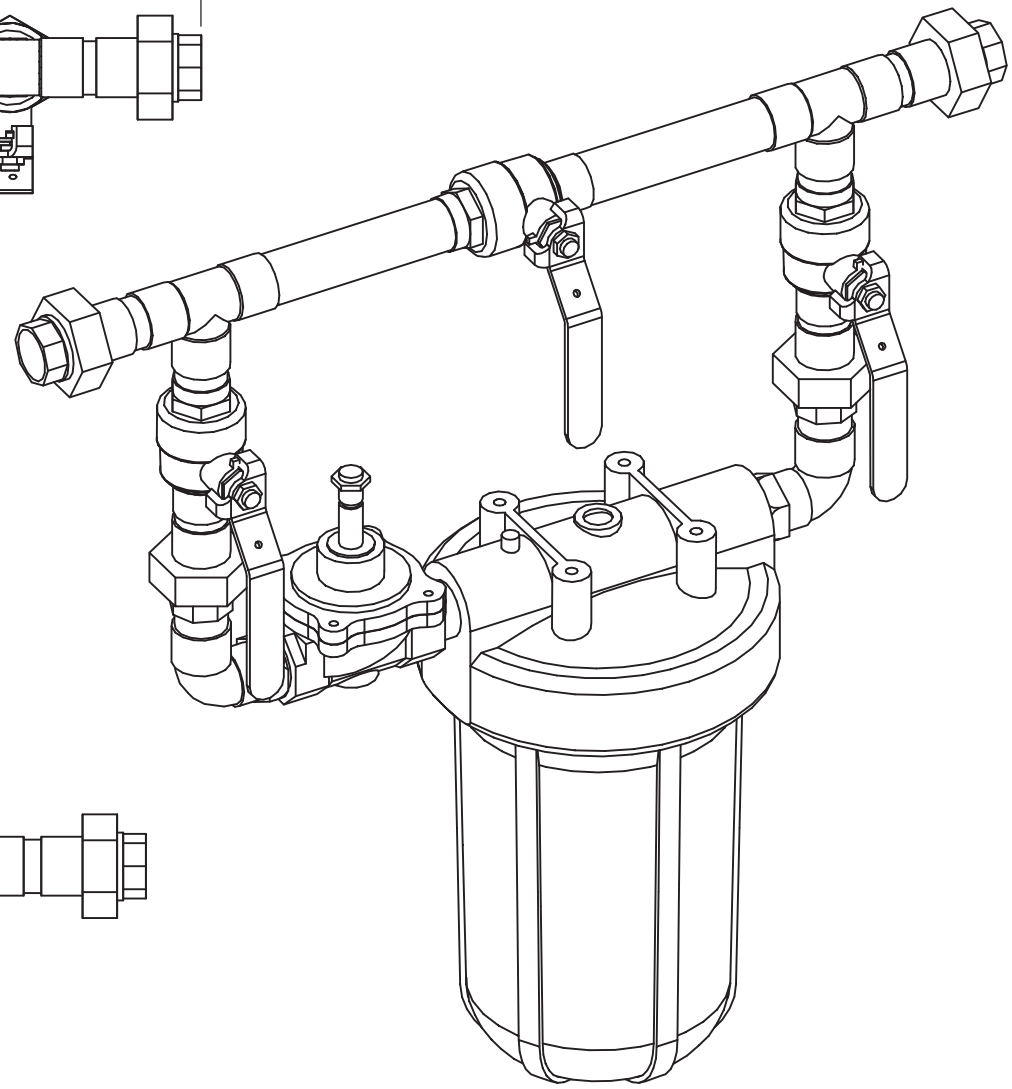

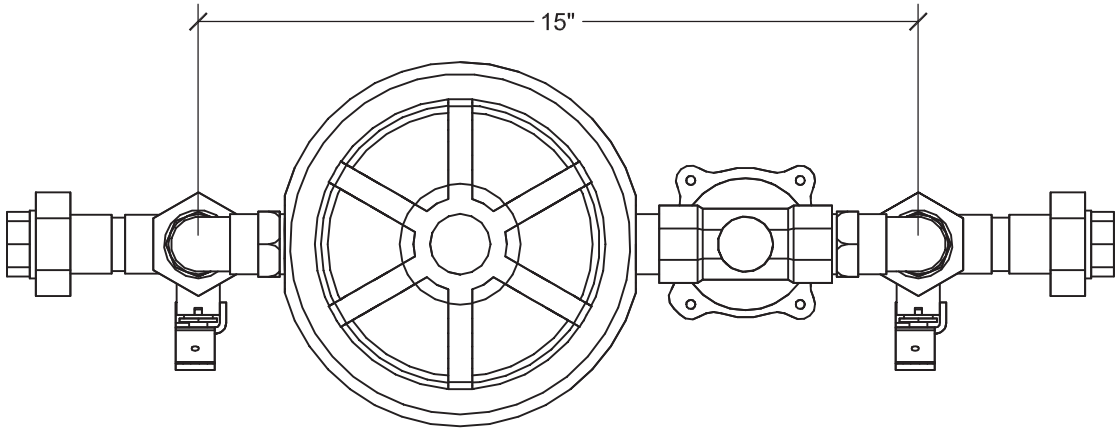

1. DIMENSIONS ARE NOT AN EXACT REPRESENTATION OF ACTUAL UNIT, BUT A CLOSE APPROXIMATION.
2. NOT ALL FTTINGS AND PIPING ARE SHOWN. SOME PIPING MAY FALL OUTSIDE OF DIMENSIONS GIVEN.

THE INFORMATION ON THIS DRAWING IS PROPRIETARY AND CONFIDENTIAL AND SHALL NOT BE DISCLOSED OR DUPLICATED WITHOUT CONSENT OF TECH WEST INC.

TECH WEST INC.

PART NAME: **1" WATER BYPASS UNIT**

DATE: **4-6-12** | SCALE: **3" = 1' - 0"** | DRAWN: **MJ** | SHEET: **2 of 2**