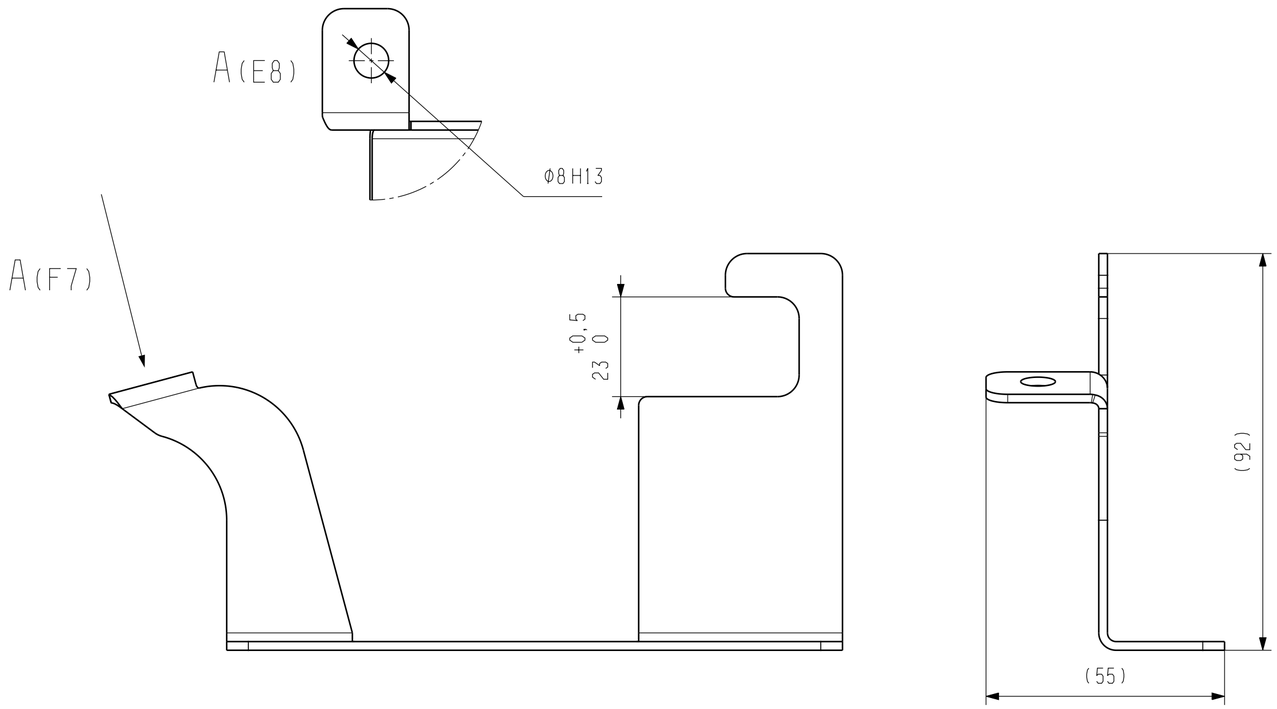

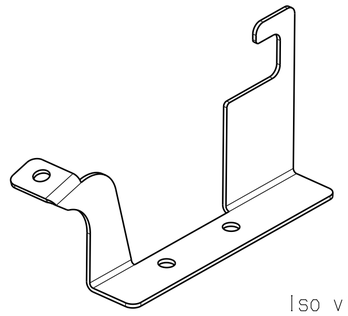

Iso view
Scale: 1:2

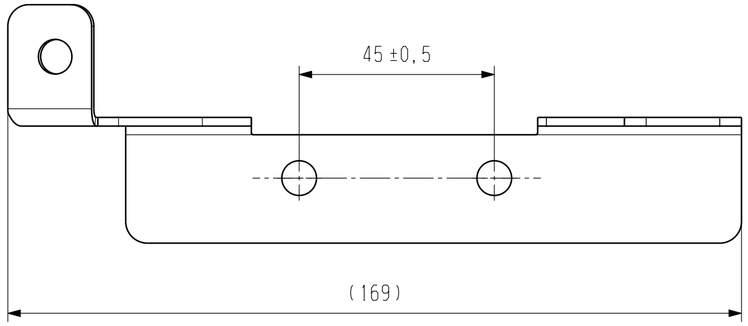

Unless otherwise stated, the following applies to the 3D model geometry (considered theoretically exact):

All measurements after surface treatment

Bending angle:90°
Bending radii:R2

Unless otherwise stated the following applies		
ISO metric screw threads ISO 724 Tolerance class ISO-965-1 6H/6h	Edge Requirement STD4443 Welding STD SS-EN ISO 3834-4	
Surface Texture µm	Tolerancing STD3162	Size Tolerances ±1mm ±2deg
Surface Treatment		

Material		Marking STD19
Sort: Steel	Blank / Dimension: 2mm	At Method
Class / Quality: 32		Line(s) Height
Condition / References: STD755		Trademark, type
		Moreover

Change	Zone	ECO Number	Change Description	3D	Date	Sign
A		563731	Status PR was P		181122	FLAF3M

Symbols, designations and drawing methods STD12 | Prohibited and restricted substances in Scanias products STD4400

Projection Method	Scale	Introduced ECO Number	Classification STD3944	Regulated Parts STD4178
	1:1	563731	<C>;0 <M>;0	<L>;0

Designed	Design Checked	STD ch	Approved
Larsson Fredrik	konpec mgac60	sssuks	

Description: Bracket

Status: PR

Document ID: 2749692

Doc.Rev: 2

Date: 2018-04-16

Sheet: 1 (1)

N.B. The copyright and ownership of this drawing including associated computer data are and still remains ours. They must not be copied and/or brought to the knowledge of any third party without our prior permission. © SCANIA, Sweden.

2749692

SV1106-02 A2